Index

2-Wheel drive

Axle shaft
- assembly 40.9, 40.10
- removing/installing 40.11

Axle shaft
- assembly 40.23, 40.24
- ★ revised for vehicle w/097 trans. 40.27

Ball joint
- installing 40.6

Coil spring
- assembly 40.14, 40.18
- removing/installing 40.15, 40.19

Control arm
- assembly 40.2
- bushing 40.4, 40.8b
- revisions for 1990 m.y. 40.8a

CV joint/boot
- installing 40.26
- removing 40.25
- ★ revised for vehicle w/097 trans. 40.27

Protective ring
- installing 40.22

Shock absorber
- assembly 40.14, 40.18

Stabilizer bar
- assembly 40.2
- bushings 40.5

Subframe
- assembly 40.2
- bushings 40.4a, 40.8
- resonance/ vibration (4-cyl.) 40.3

Suspension
- revisions for 1990 m.y. 40.3

Suspension strut
- assembly 40.14, 40.18
- installing 40.13
- removing 40.12

Wheel bearing
- housing 40.14, 40.20
- pressing out/in 40.16, 40.21

Wheel hub
- assembly 40.14, 40.20
- pressing out in 40.15, 40.21

★ NEW INFORMATION since last filming

cardiagn.com

Front Wheel Suspension – Shafts & Axle

CAUTION

DO NOT attempt to weld or straighten the wheel locating parts of the front suspension.

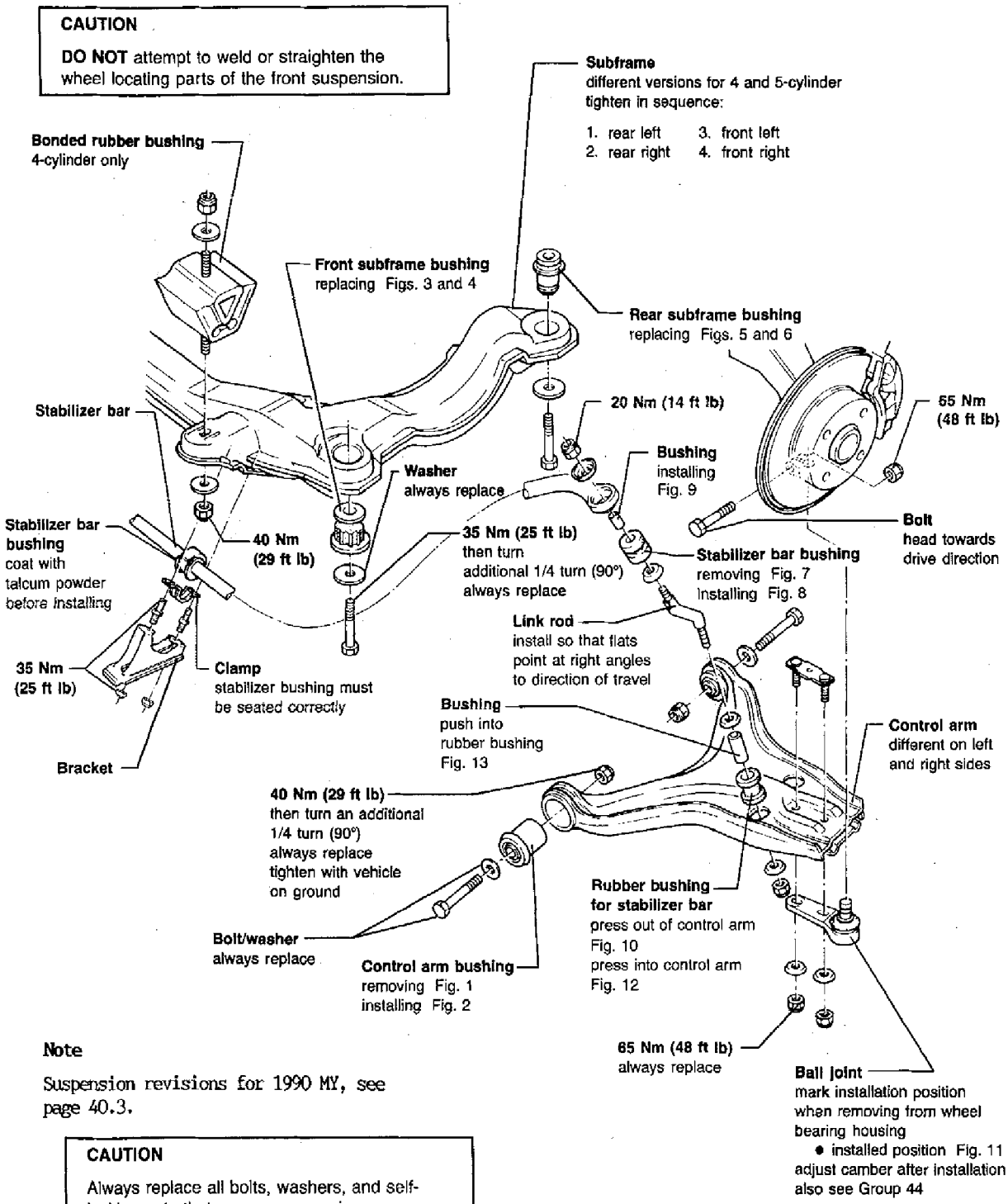

Note

Suspension revisions for 1990 MY, see page 40.3.

CAUTION

Always replace all bolts, washers, and self-locking nuts that secure suspension components, e.g., subframe, control arms, stabilizer bar, ball joints, etc., when repairing.

U 40-779

A-2

cardiagn.com

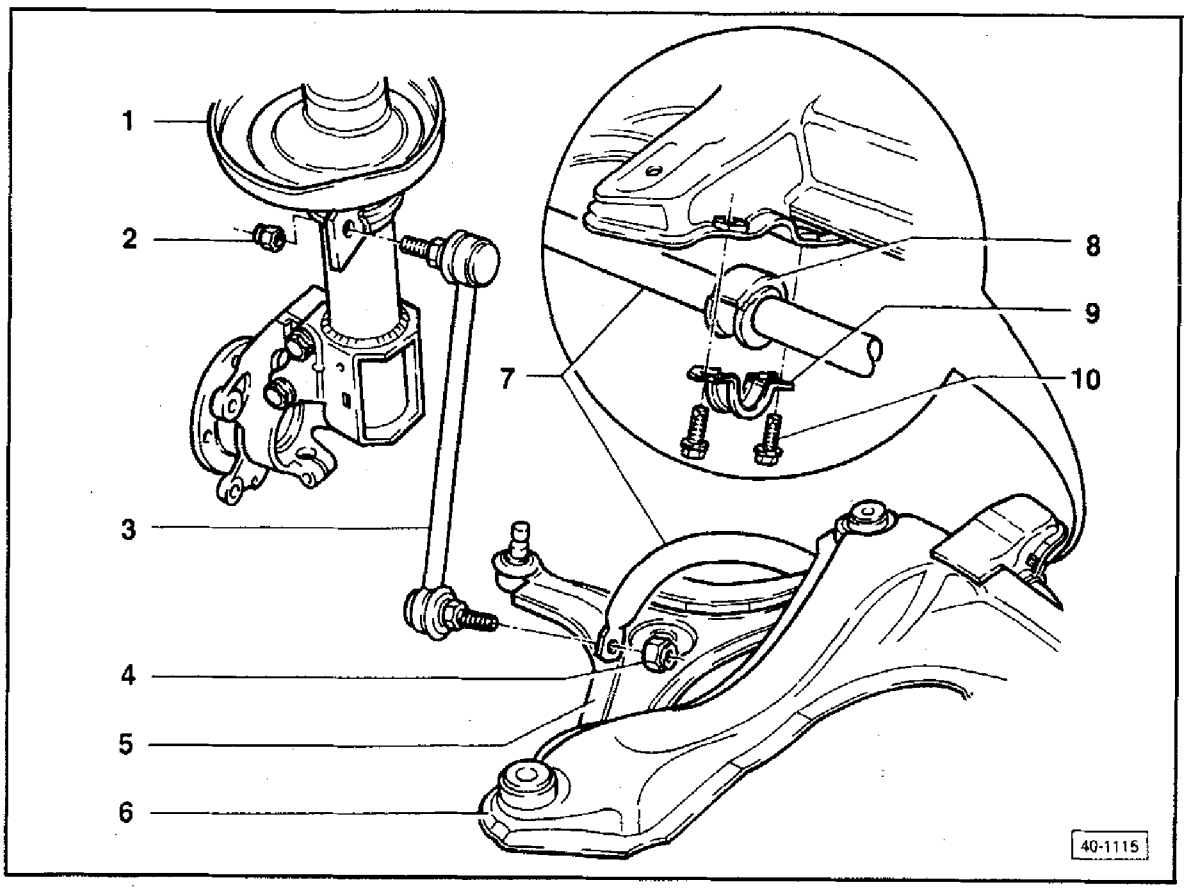

CAUTION

The revised suspension parts must not be installed in earlier vehicles.

1 — **Wheel bearing/shock absorber housing**
with tab for mounting stabilizer link rod
shock absorbers revised

2 — **45 Nm (33 ft lb)**
always replace

3 — **Link rod**

4 — **45 Nm (33 ft lb)**
always replace

5 — **Control arm**
revised to eliminate link rod mounting

6 — **Subframe**

7 — **Stabilizer bar**
revised version

8 — **Rubber bushing**
different diameters depending on stabilizer diameter

9 — **Clamp**
revised from previous version

10 — **35 Nm (26 ft lb)**
always replace
tighten only with vehicle on ground

Note

Also, see suspension revisions for 1990 MY, page 40.8a and 40.8b (control arm/bushings).

cardiagn.com

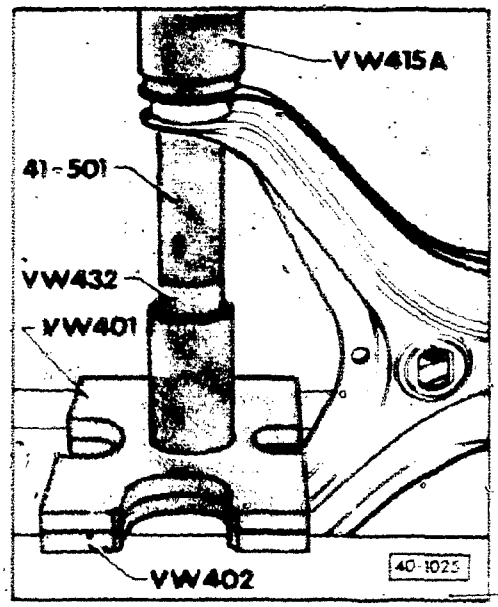

▶ Fig. 1 Control arm bushing, removing

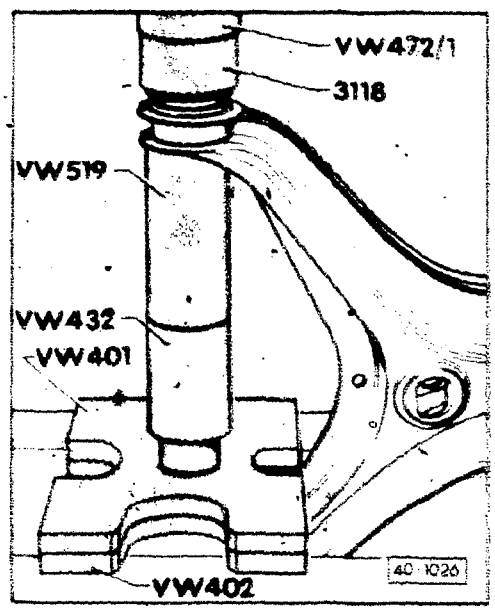

▶ Fig. 2 Control arm bushing, installing

- install bushing to stop

cardiagn.com

A-4

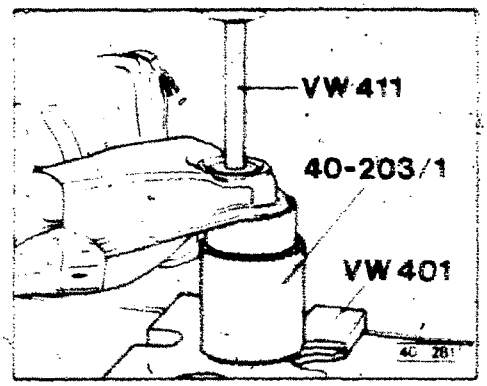

▶ Fig. 3 **Front subframe bushing, pressing out (vehicles with 4-cylinder engine)**

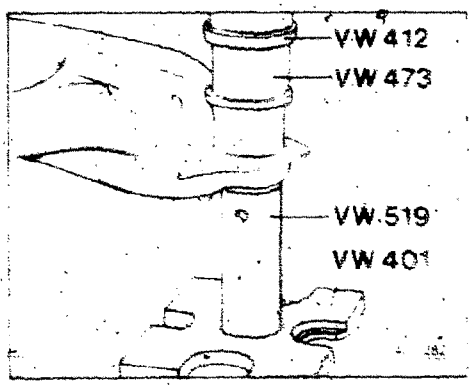

▶ Fig. 4 **Front subframe bushing, pressing in (vehicles with 4-cylinder engine)**

■ apply acid-free lubricant before installing

cardiagn.com

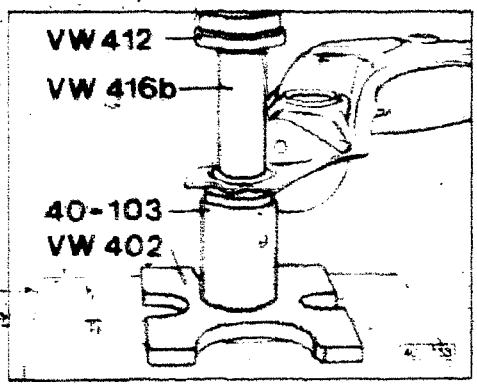

▶ **Fig. 5 Rear subframe bushing, pressing out (vehicles with 4-cylinder engine)**

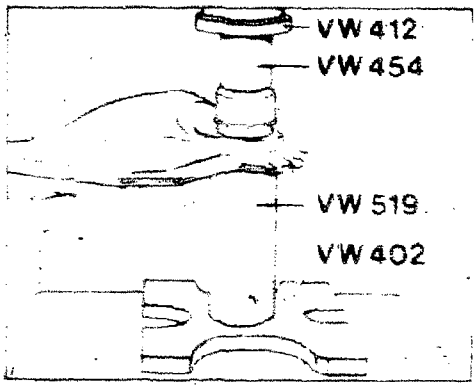

▶ **Fig. 6 Rear subframe bushing, pressing in (vehicles with 4-cylinder engine)**

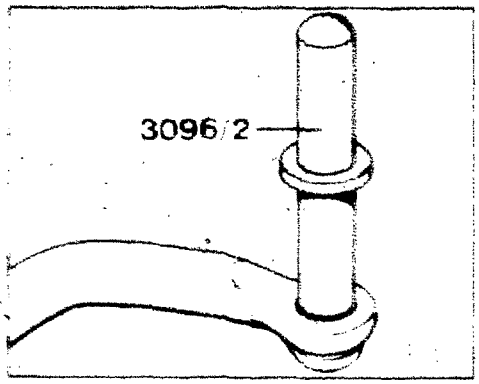

▶ **Fig. 7 Stabilizer bar bushing, pressing out**

- cut collar off rubber bushing

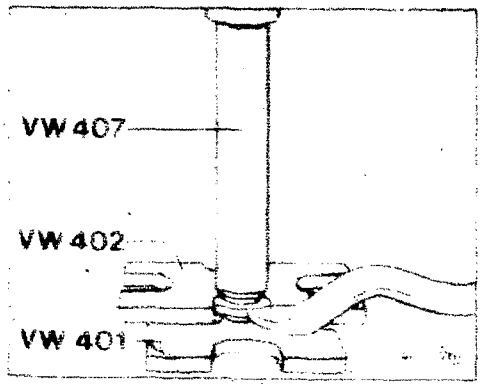

▶ **Fig. 8 Stabilizer bar bushing, pressing in**

- apply acid-free lubricant before installation

cardiagn.com

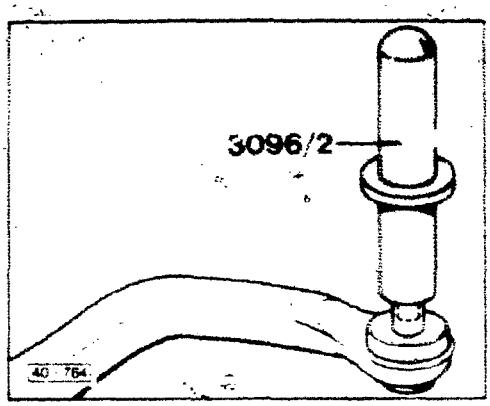

▶ **Fig. 9 Bushing, pressing in**

- coat bushing with acid-free lubricant before installing

Note

Inner bushing must be aligned in center of rubber bushing.

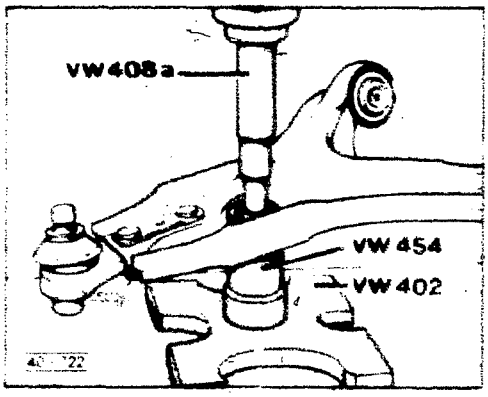

▶ **Fig. 10 Rubber bushing in control arm, pressing out**

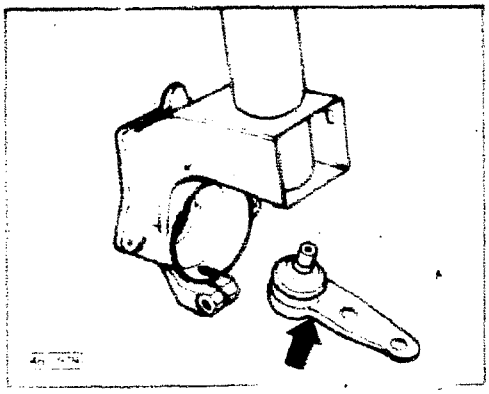

▶ **Fig. 11 Ball joint, installing**
(right side shown)

- offset faces in direction of vehicle travel (**arrow**)
- **DO NOT** expand slot on wheel bearing housing
- adjust camber after installation

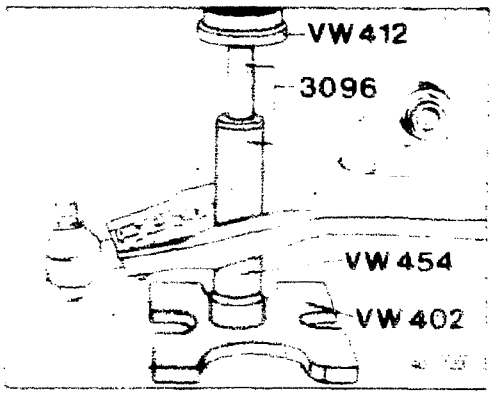

▶ **Fig. 12 Rubber bushing in control arm, pressing in**

- coat rubber bushing and inner section of sleeve **3096/1** with acid-free lubricant

A-7

cardiagn.com

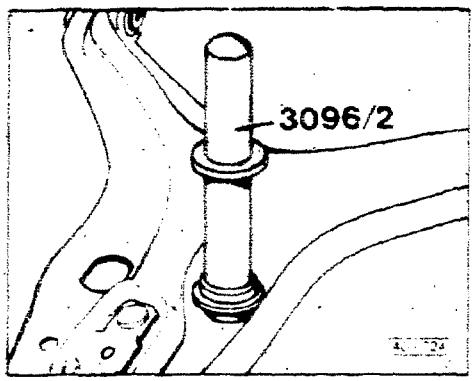

▶ **Fig. 13 Bushing, pressing in**

- lubricate bushing with acid-free lubricant before installing

Note

Inner bushing must be aligned in center of rubber bushing.

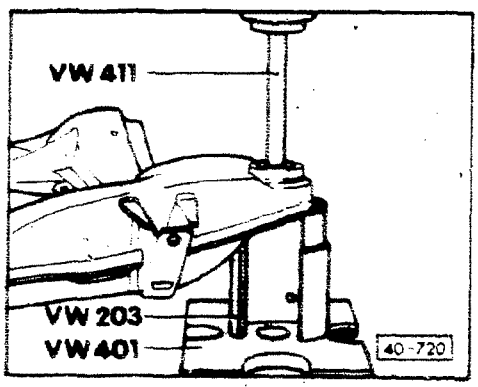

▶ **Fig. 14 Front subframe bushing, pressing out (vehicles with 5-cylinder engine)**

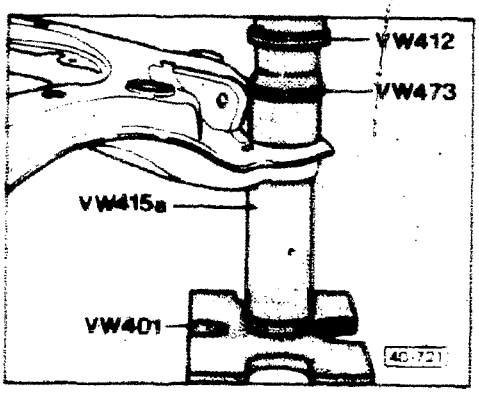

▶ **Fig. 15 Front subframe bushing, pressing in (vehicles with 5-cylinder engine)**

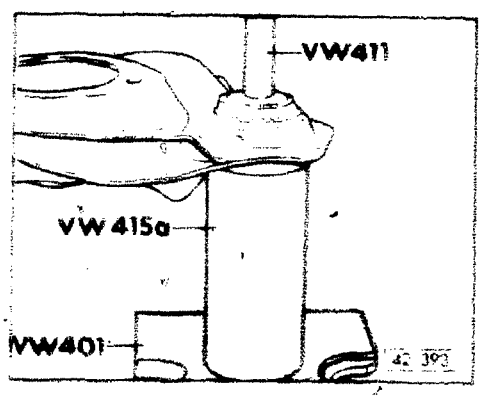

▶ **Fig. 16 Rear subframe bushing, pressing out (vehicles with 5-cylinder engine)**

cardiagn.com

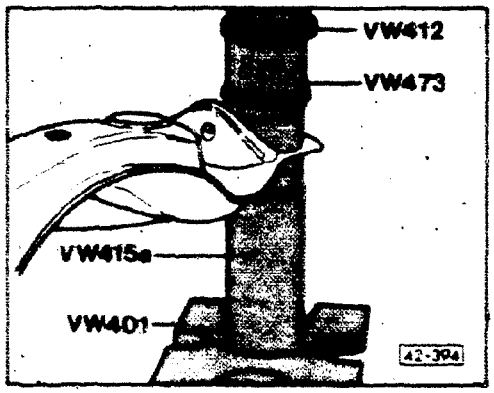

▶ **Fig. 17 Rear subframe bushing, pressing in (vehicles with 5-cylinder engine)**

- apply acid-free lubricant before installing

Subframe resonance/vibration, eliminating (4-cylinder)

Humming or droning noises occurring at approx. 1800-2000 RPM could be caused by resonance/vibration from the subframe.

The following procedure describes the installation of a balance weight to cure subframe resonance/vibration.

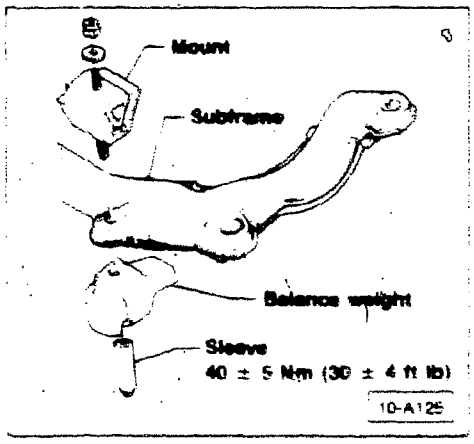

- remove sound absorber pan
- remove left sound absorber pan support bracket
- remove left engine mount lower nut and washer
- clean engine mount threads
- apply loctite to sleeve threads
  - Part No. **D 000 600**
- install balance weight, Part No. **893 199 333C**, sleeve, Part No. **893 199 467**
  - torque 40 ± 5 Nm (30 ± 4 ft lb)
- reinstall all components in reverse order

Caution

Part numbers are for reference only. Always check with your Parts Department for latest information.

A-9

cardiagn.com

Front Wheel Suspension – Shafts & Axle

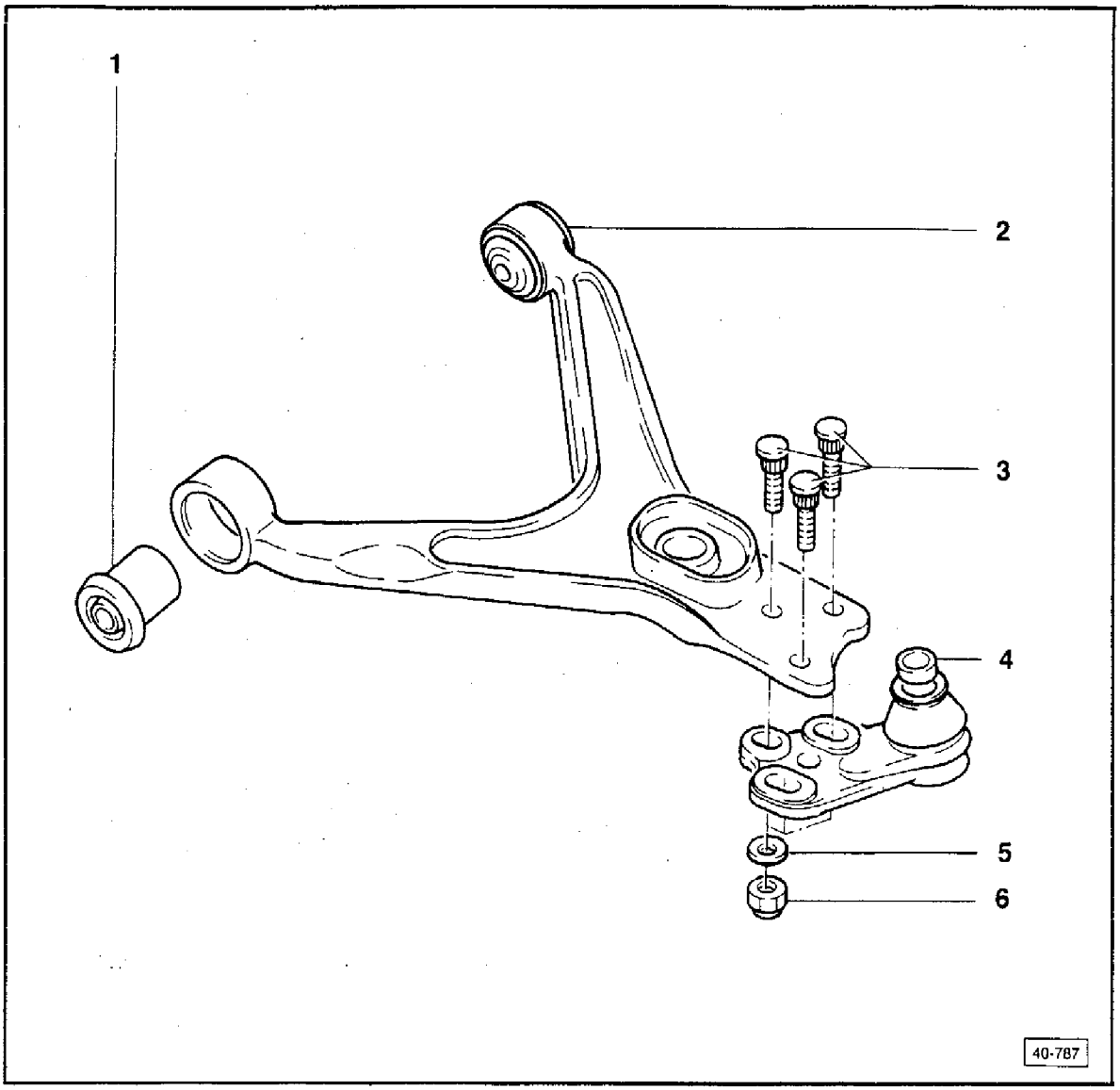

CAUTION

The revised suspension parts must not be installed in earlier vehicles.

1 — **Bushing**
removing, Fig. 1
installing, Fig. 2

2 — **Control arm**
left/right sides different

3 — **Bolt**
install in control arm to stop

4 — **Ball joint**
left/right sides different
end diameter = 19.0 mm
do not expand slot in wheel bearing housing when removing/installing
adjust camber after installation

5 — **Washer**

6 — **65 Nm (48 ft lb)**

Note

Prior to change use tool 3098 to adjust camber. Vehicles with revised suspension use tool 3196 for camber adjustment.

cardiagn.com

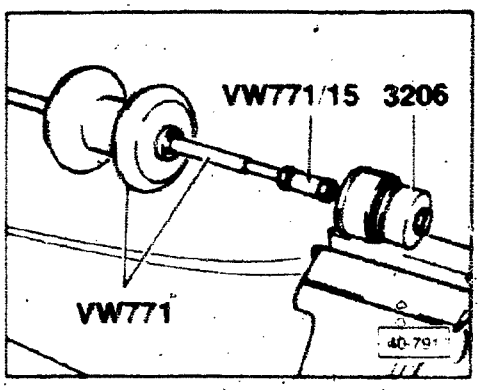

▶ Fig. 1 Control arm bushing, removing

- mount control arm in vise (use jaw covers)
- remove with 3206

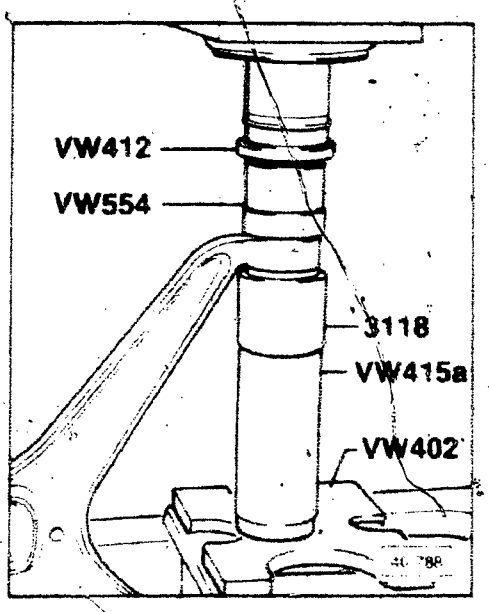

▶ Fig. 2 Control arm bushing, installing

- press in to stop

cardiagn.com

CAUTION

If vehicles have to be moved after removing an axle shaft, an outer joint has to be installed in place of the axle shaft to avoid damaging the wheel bearing.

CAUTION

Always replace all self-locking nuts that secure suspension components, e.g., suspension struts, axle shafts, ball joints, etc., when repairing.

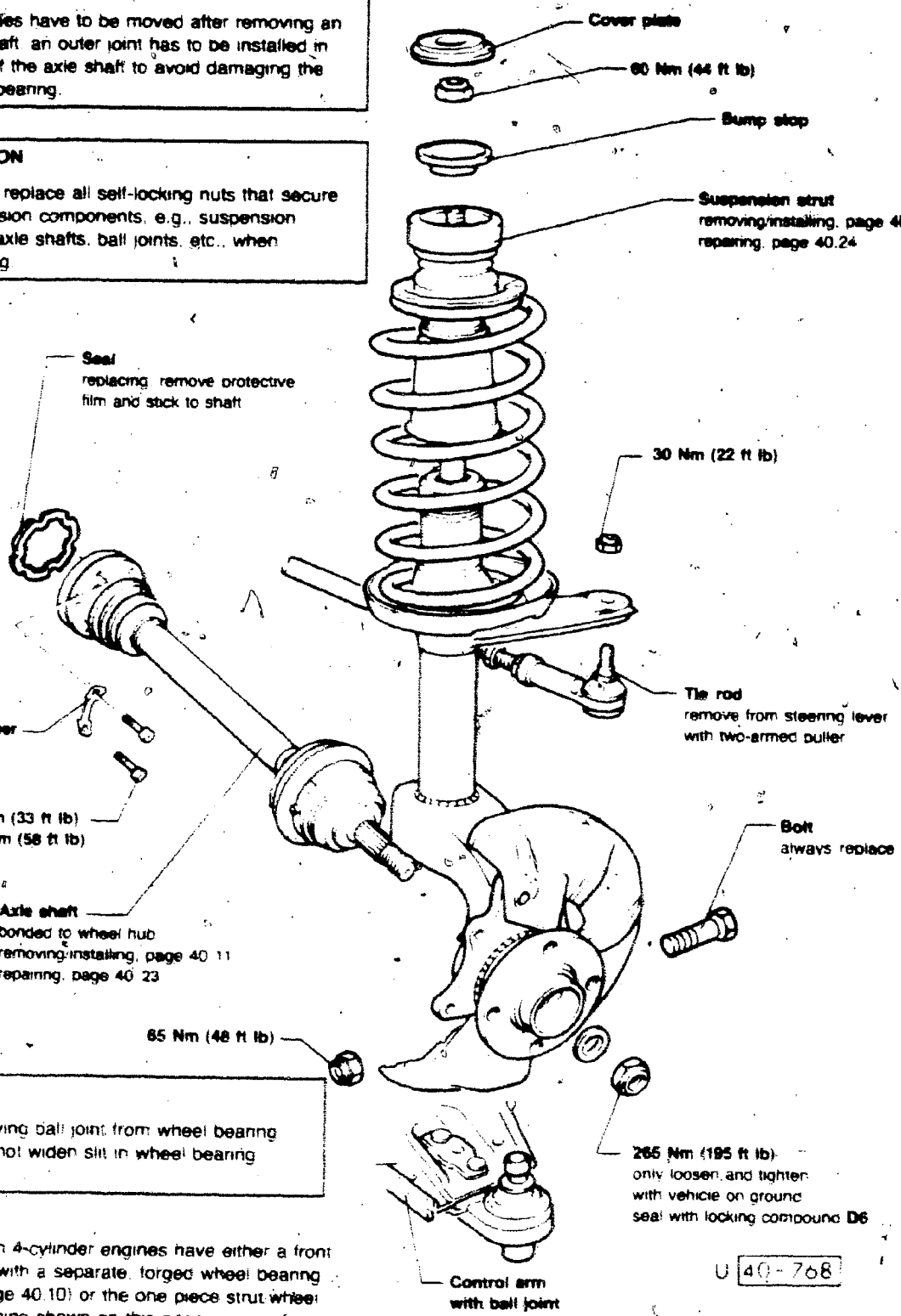

CAUTION

When removing ball joint from wheel bearing housing do not widen slit in wheel bearing housing.

Note

Vehicles with 4-cylinder engines have either a front suspension with a separate, forged wheel bearing housing (page 40.10) or the one piece strut wheel bearing housing shown on this page.

A-12

Attached wheel bearing housing

cardiagn.com

CAUTION

If vehicles have to be moved after removing an axle shaft, an outer joint has to be installed in place of the axle shaft to avoid damaging the wheel bearing.

CAUTION

Always replace all self-locking nuts securing suspension components, e.g., suspension strut/wheel bearing housing, tie rod, etc., when repairing.

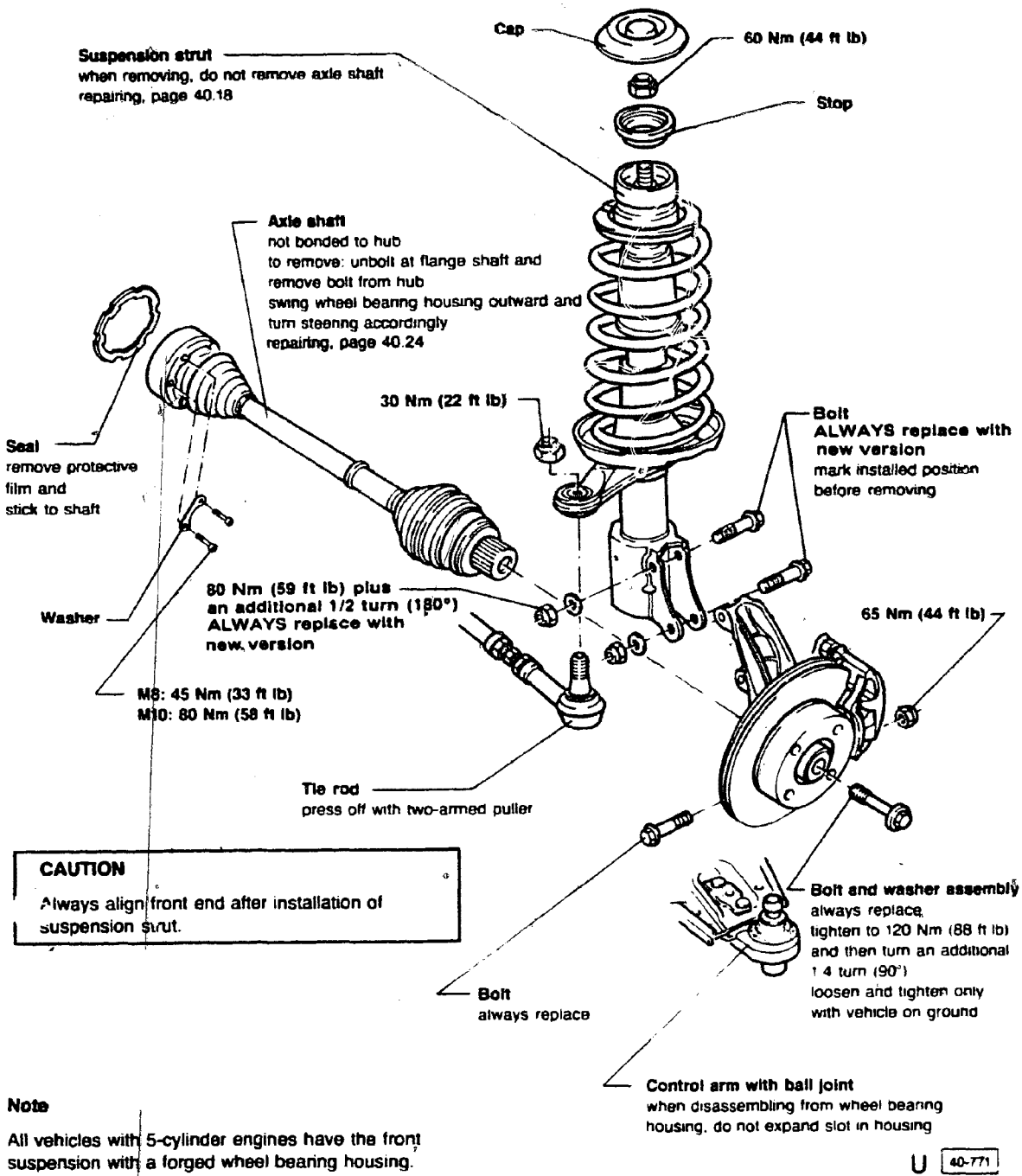

CAUTION

Always align front end after installation of suspension strut.

Note

All vehicles with 5-cylinder engines have the front suspension with a forged wheel bearing housing.

cardiagn.com

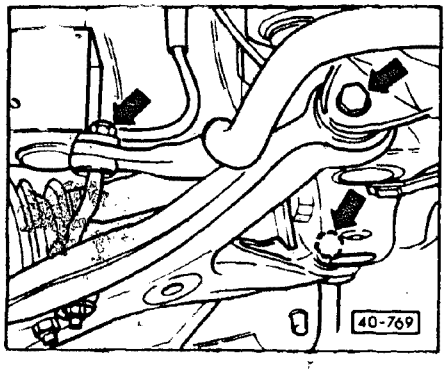

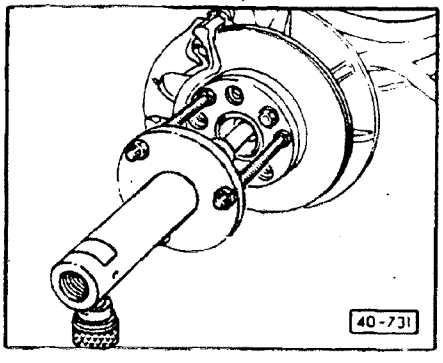

Axle shaft, removing/installing

Removing

- loosen wheel bolts
- remove bolt or nut for wheel hub to axle shaft (vehicle on ground)
- remove washer
- remove wheel
- remove axle shaft flange
- remove nut from link rod
- remove mounting bolts for control arm/ stabilizer bar/subframe (**arrows**)
- push control arm downward

- using puller as shown, press axle shaft out of hub

> **CAUTION**
>
> If vehicles have to be moved after removing an axle shaft, refasten the control arm to the subframe and to the link rod and instead of the axle shaft, install an outer joint to avoid damage to the wheel bearing.

Installing

> **CAUTION**
>
> Clean splines on axle shaft and wheel hub to remove oil, grease and traces of locking compound.

Vehicles with attached wheel bearing housing only:

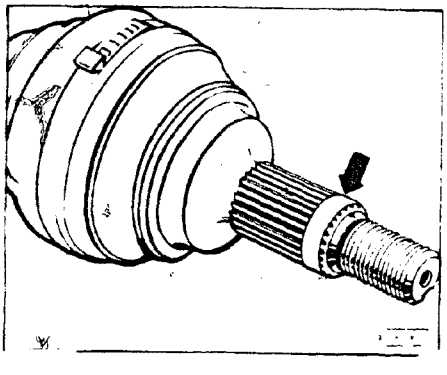

- apply locking compound **D6** to splines of outer constant velocity joint over an area of approximately **5 mm** wide (**arrow**) and then install axle shaft

Note

When installing the right drive shaft do not damage the boot on the cover plate.

> **CAUTION**
>
> Allow locking compound **D6** at least 60 minutes to harden with vehicle stationary.

cardiagn.com

Suspension strut, removing/installing

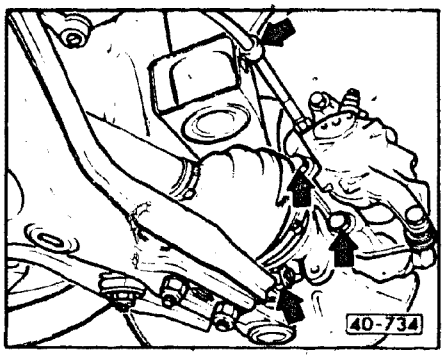

Removing

- loosen wheel bolts
- remove hub/axle shaft nut or bolt (vehicle standing on its wheels)
- remove washer
- remove wheel
- remove brake caliper bolts and brake caliper (**middle arrows**)
- remove brake disc
- remove bracket for brake hose (**upper arrow**) and fasten caliper to body with wire
- remove mounting bolt for ball joint to wheel bearing housing (**lower arrow**)

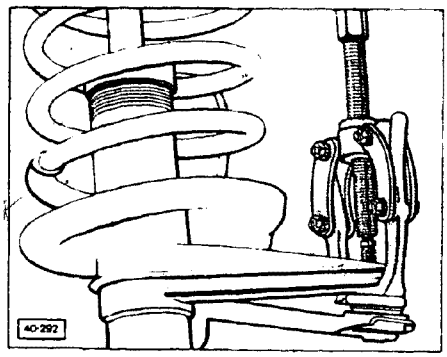

- press off tie rod end

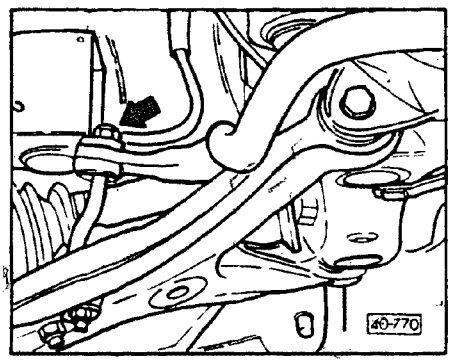

- remove nut from link rod (**arrow**)
- pry down on control arm to remove ball joint from wheel bearing housing

Note

While prying ball joint out move steering wheel alternately from left to right (2 mechanics required).

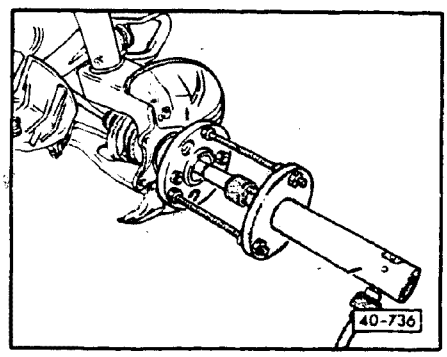

- using puller as shown, press axle shaft out of hub and remove

CAUTION

Always remove stub axle with mechanical or hydraulic hub puller only. DO NOT heat up wheel bearing housing or wheel bearing will be damaged.

cardiagn.com

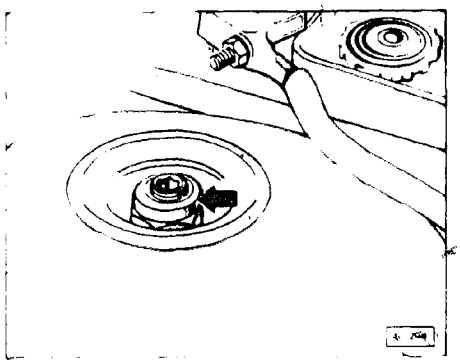

- remove cover plate
- support suspension strut from below
- loosen nut from shock absorber (**arrow**) while holding piston rod with internal socket wrench

Installing

> **CAUTION**
>
> Splines on axle shaft and wheel hub must be free of oil, grease and old locking compound.

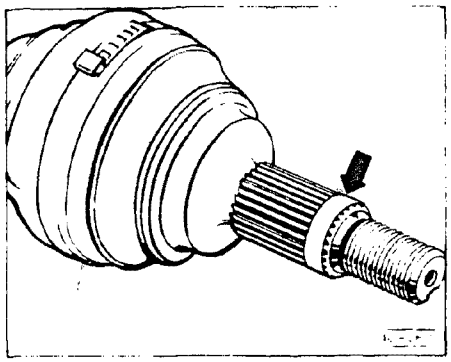

Vehicles with attached wheel bearing housing only:

- apply locking compound **D6** to splines of outer constant velocity joint over an area of approximately 5 mm wide (**arrow**) and then install axle shaft

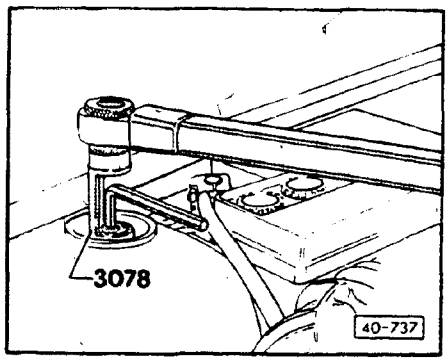

- torque shock absorber nut while holding piston rod
  - 60 Nm (44 ft lb)

> **CAUTION**
>
> Allow locking compound **D6** at least 60 minutes to harden with vehicle stationary.

cardiagn.com

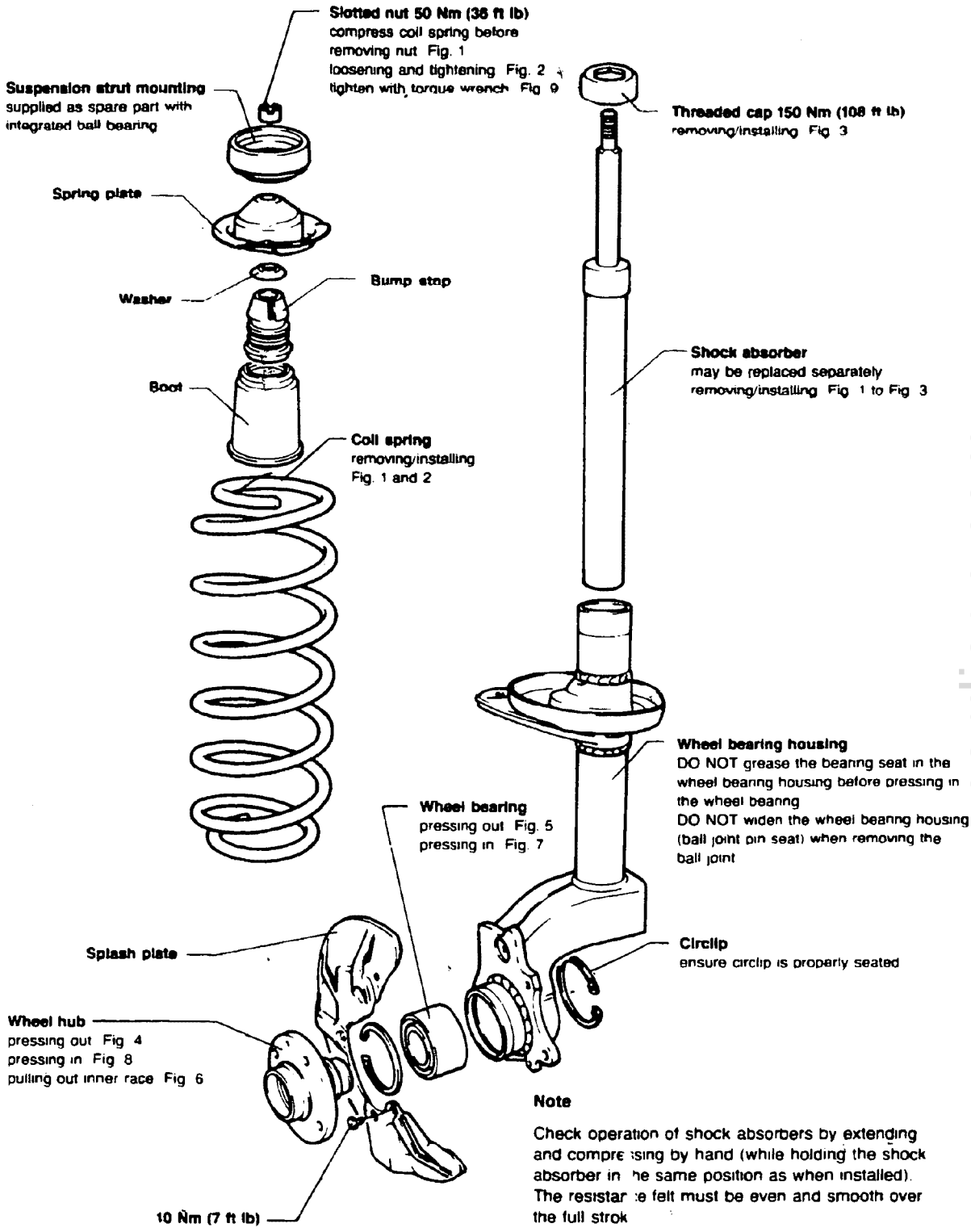

Note

Check operation of shock absorbers by extending and compressing by hand (while holding the shock absorber in the same position as when installed). The resistance felt must be even and smooth over the full stroke

cardiagn.com

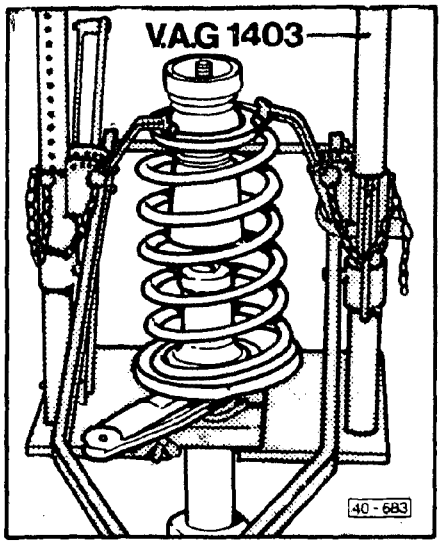

▶ **Fig. 1 Coil spring, removing/installing**

Note

If the tool V.A.G 1403 is not available, use tool VW 340.

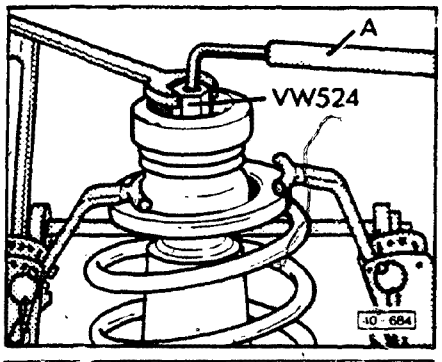

▶ **Fig. 2 Coil spring, removing/installing**

A = internal socket wrench

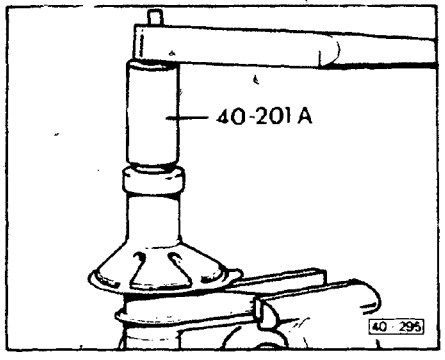

▶ **Fig. 3 Shock absorber, removing/installing**

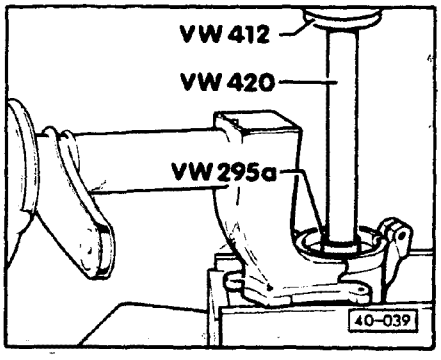

▶ **Fig. 4 Wheel hub, pressing out**

cardiagn.com

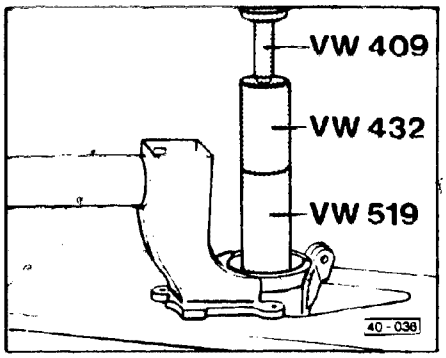

▶ **Fig. 5 Wheel bearing, removing**

- first remove circlips

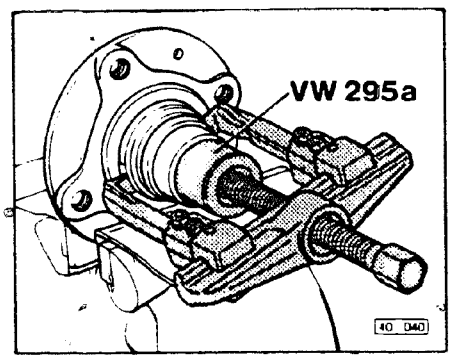

▶ **Fig. 6 Wheel bearing inner race, removing**

Note

Arms of puller should be ground down as required.

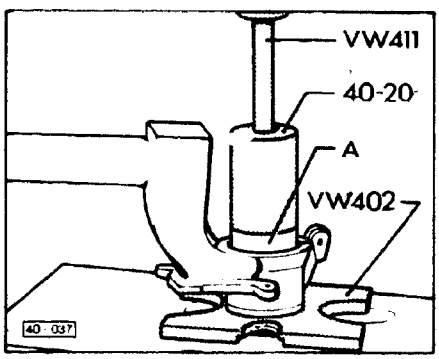

▶ **Fig. 7 Wheel bearing, pressing in**

- install outer circlip
- press bearing in to stop
- install inner circlip

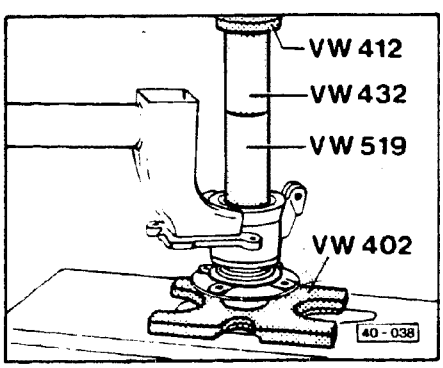

▶ **Fig. 8 Wheel hub, installing**

Note

Tool VW 519 must only contact the inner race.

cardiagn.com

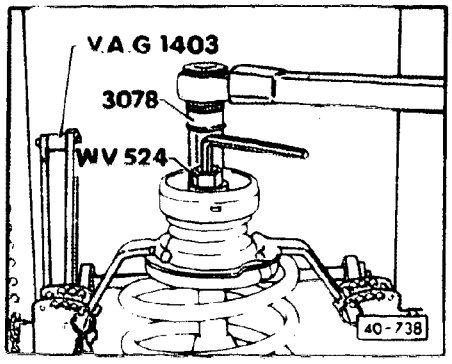

▶ Fig. 9 Upper shock absorber nut, tightening

cardiagn.com

(Vehicles with 5-cylinder engine)

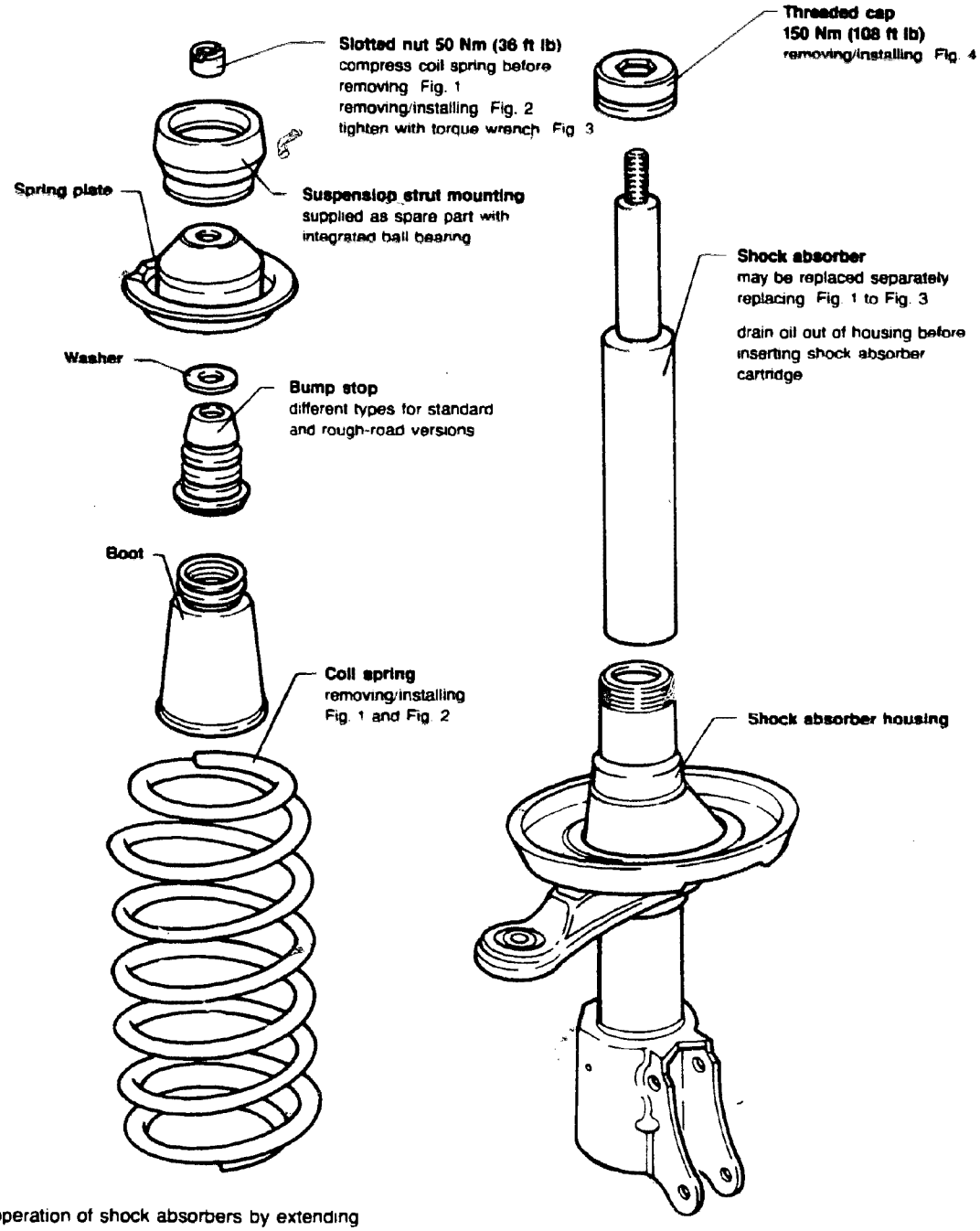

Note

Check operation of shock absorbers by extending and compressing by hand (while holding shock absorber in the same position as when installed). The resistance felt must be even and smooth over the full stroke.

U 40-782

cardiagn.com

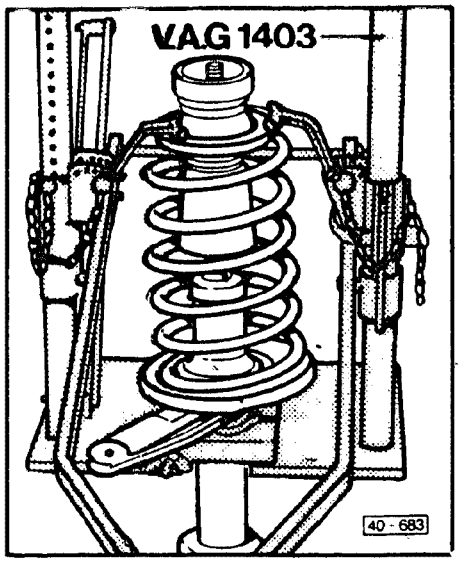

▶ **Fig. 1 Coil spring, removing/installing**

Note

If tool V.A.G 1403 is not available, use tool VW 340

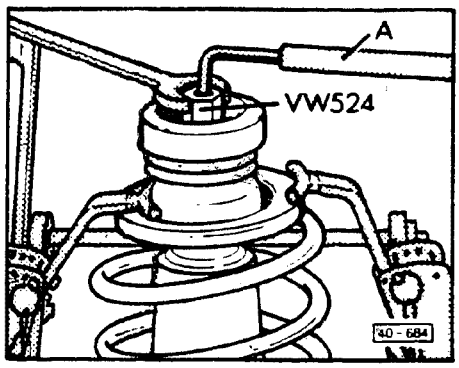

▶ **Fig. 2 Coil spring, removing/installing**

- hold shock absorber shaft with internal socket wrench

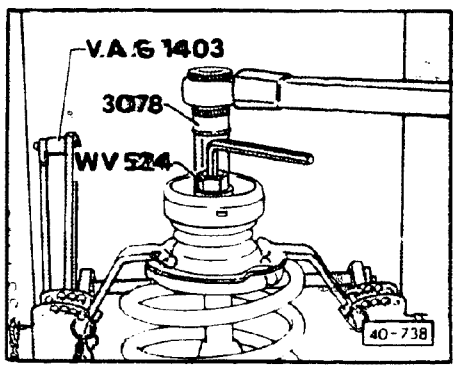

▶ **Fig. 3 Shock absorber, installing**

- tighten slotted nut to 50 Nm (36 ft lb)

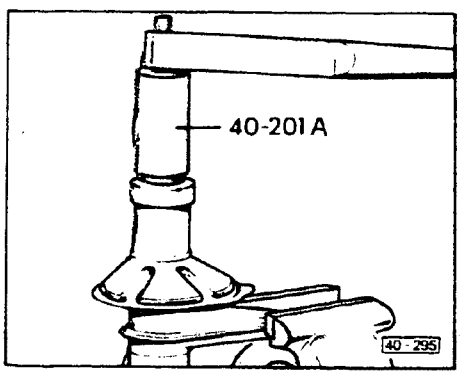

▶ **Fig. 4 Threaded cap, removing/installing**

cardiagn.com

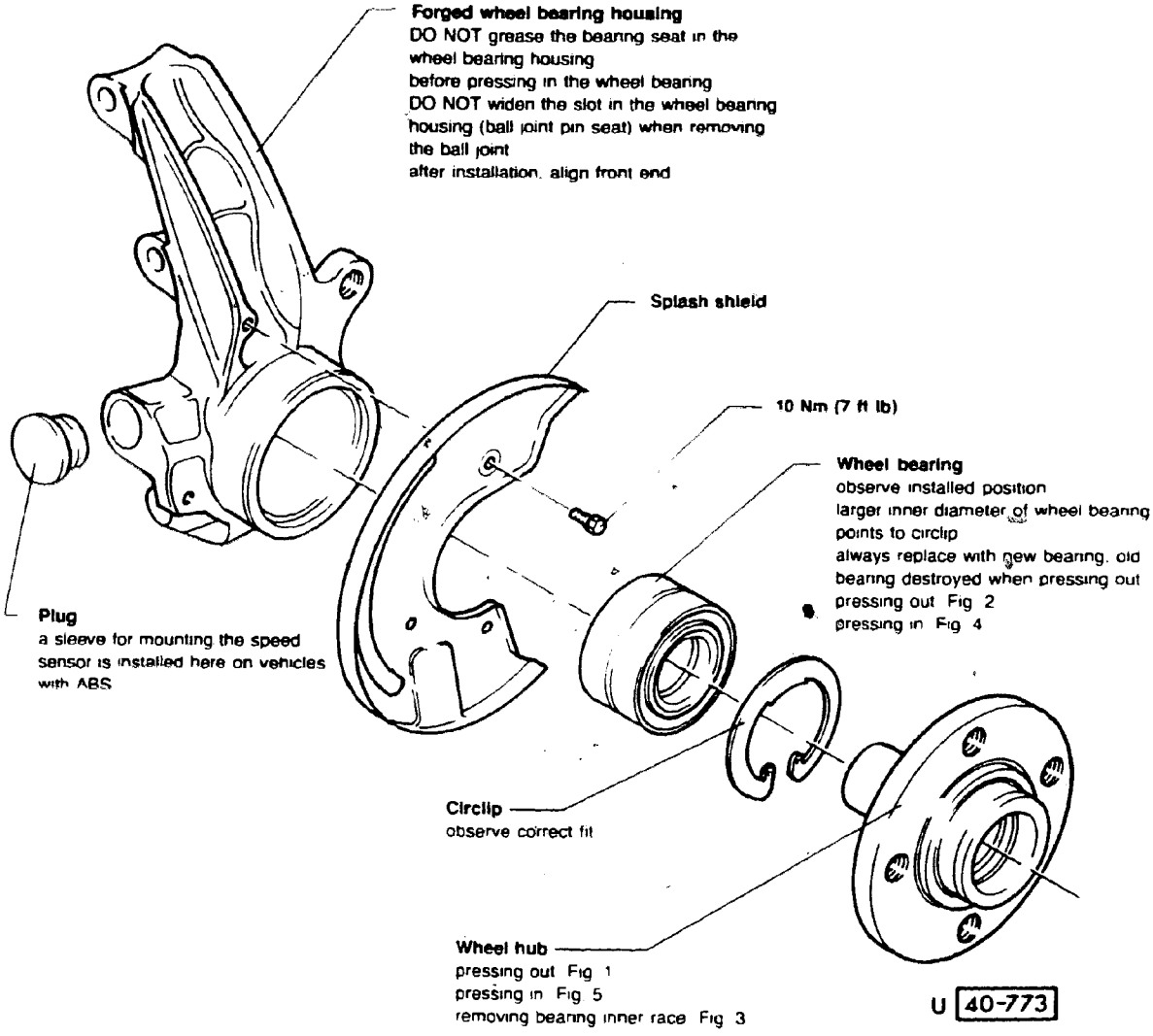

cardiagn.com

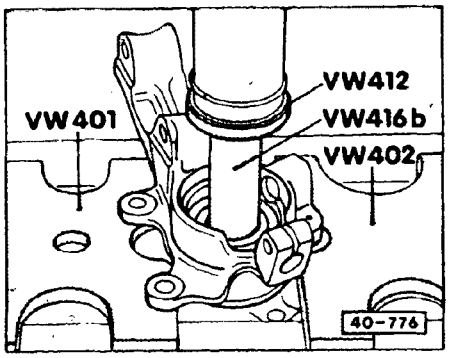

▶ **Fig. 1 Wheel hub, pressing out**

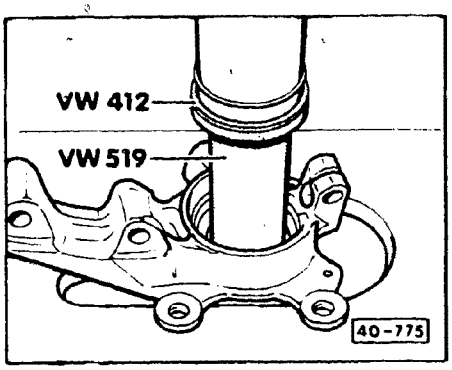

▶ **Fig. 2 Wheel bearing, pressing out**

- first remove circlip

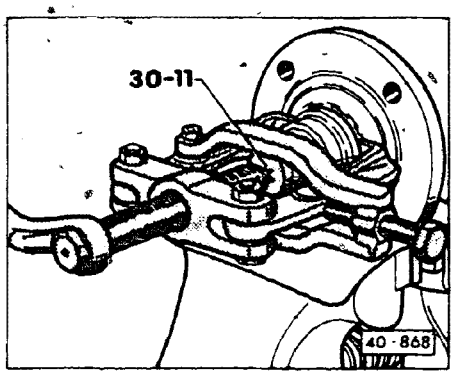

▶ **Fig. 3 Wheel bearing inner race, removing**

Note

Use an extractor with a clamp, e.g. **Kukko 204-1**.

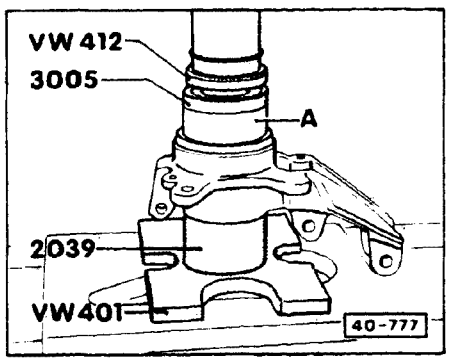

▶ **Fig. 4 Wheel bearing, pressing in**

Note

Larger diameter of wheel bearing points towards circlip.

cardiagn.com

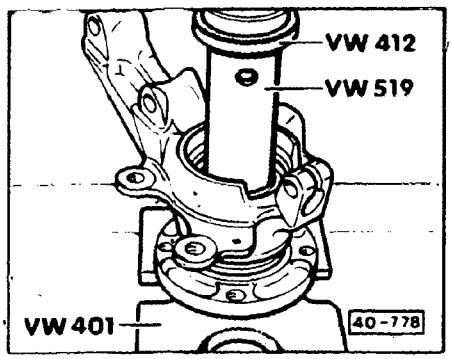

▶ **Fig. 5 Wheel hub, pressing in**

Note

Tool VW 519 must only support itself on the inner race when pressing.

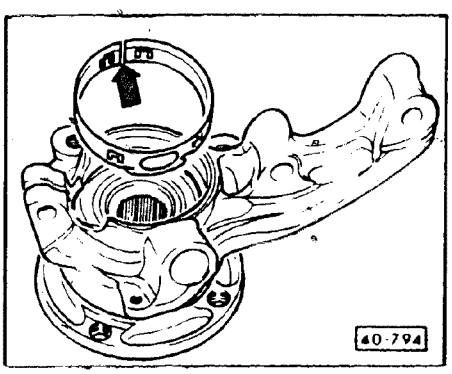

▶ **Fig. 6 Protective ring, installing**

- coat wheel bearing housing in area of ring with oil
- press ring in by hand until locking tabs engage
  - do not overlap (**arrow**)

Note

Vehicles not equipped with protective rings in production cannot have them added later.

cardiagn.com

Note

Grease packing on vehicles with **4-cylinder engine**: grease inner and outer CV-joint with 90 g each of G-6 grease

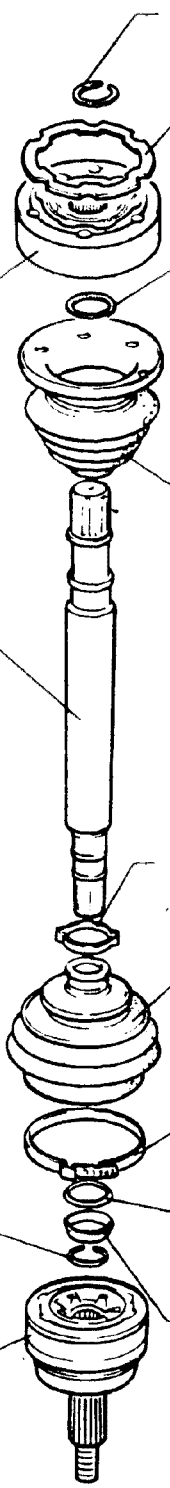

Circlip
removing/installing Fig. 5

Seal
replacing: remove protective film and stick onto joint

Dished washer
note 2 types:
1 — with inner splines
2 — without inner splines
if replacing, reinstall same type
installed position Fig 8

CV-joint, inner
outer diameter —
4 cylinder engine: 100 mm

pressing off Fig 6
pressing on Fig 7

Boot with cap
check for cracks and abrasion
remove with mandrel
prior to installation on CV joint seal face side with D-3

Shaft
varying lengths according to type of transmission

Clip
tightening Fig 1

Boot
check for cracks and abrasion
ventilating Fig 2

Hose clamp
tightening Fig 1

Circlip
installed position Fig. 3
install into ring groove of shaft (not visible with installed joint)

Dished washer
installed position Fig 3

Thrust washer
installed position Fig 3

CV-joint, outer
replace complete only
removing Fig. 4
installing: drive joint onto shaft with plastic hammer until circlip is engaged

cardiagn.com

Note

Grease packing on vehicles with **4-cylinder engine:** grease inner and outer CV-joint with 90g each of G-6 grease

Grease packing on vehicles with **5-cylinder engine**: inner CV-joint with 120g G-6 grease and outer CV-joint with 90g G-6 grease

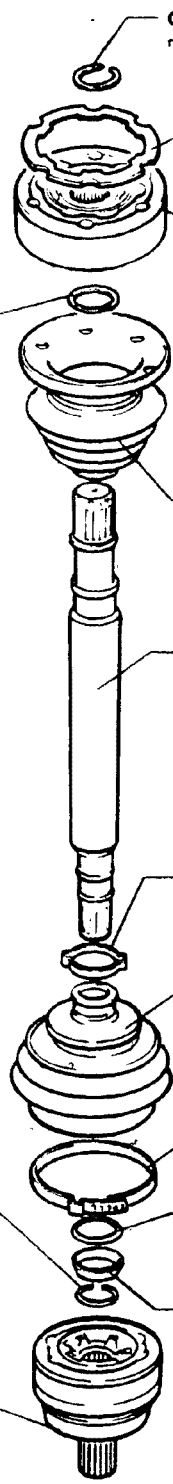

Circlip
removing/installing Fig 5

Seal
replacing, remove protective film and stick onto joint

CV-joint inner
outer diameter:
4 cylinder engine: 100 mm
5 cylinder engine: 108 mm
Quattro: 100 mm

pressing off Fig 6
pressing on Fig 7

Dished washer
Note 2 types:
1 — with inner splines
2 — without inner splines
when replacing reinstall the same type (not installed in Audi 90)
installed position Fig 8

Boot with cap
prior to installation on CV-joint seal face side with **D-3**

Shaft
varying lengths between left and right

Clip
tightening Fig 1

Boot
check for cracks and abrasion
ventilating Fig 2

Hose clamp
tensioning Fig 1

Circlip
installed position Fig 3
install into ring groove of shaft (not visible with installed joint)

Dished washer
installed position Fig 3

Thrust washer
installed position Fig 3

CV-joint, outer
replace complete only
installed position Fig 4
installing drive joint onto shaft with plastic hammer until circlip is engaged

U 40-767

cardiagn.com

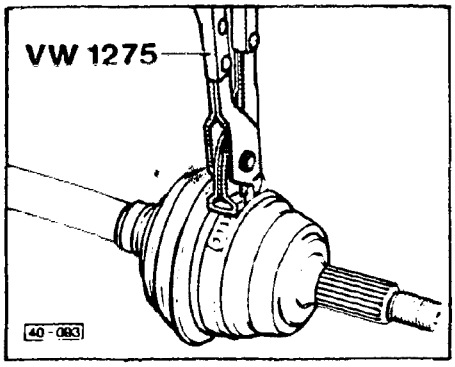

▶ **Fig. 1 Clamp, tensioning**

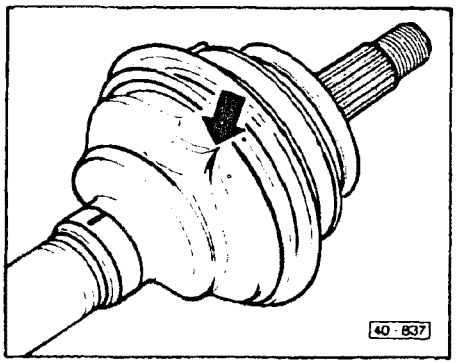

▶ **Fig. 2 Boot ventilating**

Note

Boot can be pressed in during installation causing an inward fold (**arrow**) during vehicle operation. After installing, pull the small diameter end of the boot open momentarily to allow the pressure to equalize. This venting of the boot will prevent an inward fold.

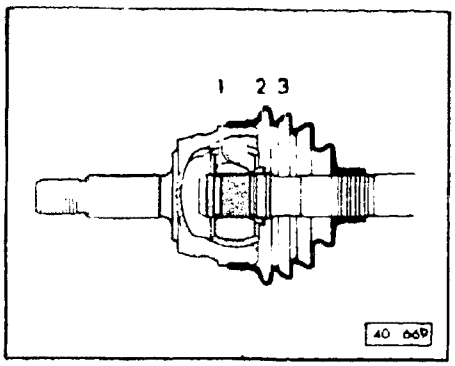

▶ **Fig. 3 Dished washer, thrust washer installed position**

1 — circlip
2 — thrust washer
3 — dished washer

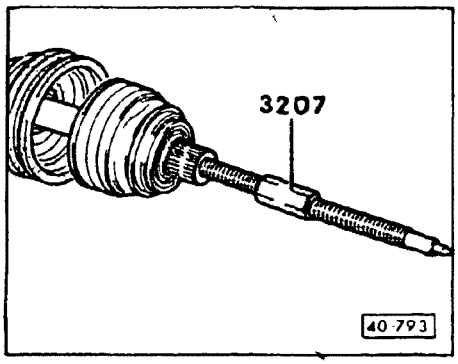

▶ **Fig. 4 CV-joint (outer), removing**

- clamp shaft in vise
- pull back boot
- thread in special tool until CV joint pushes away from shaft

cardiagn.com

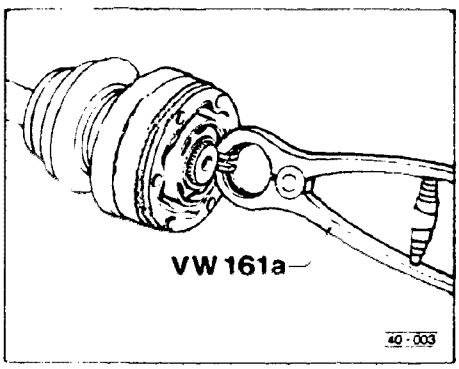

▶ **Fig. 5 CV-joint (inner) circlip, removing**

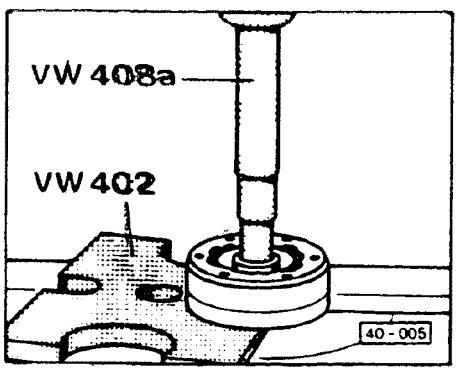

▶ **Fig. 6 CV-joint (inner), removing**

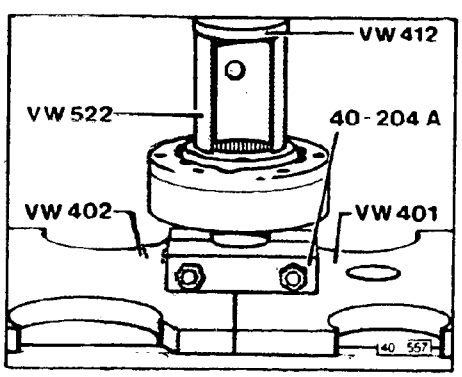

▶ **Fig. 7 CV-joint circlip, installing**

- press joint on to stop
- insert circlip

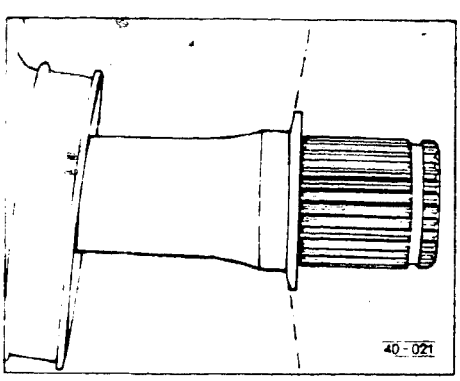

▶ **Fig. 8 Dished washer, installing**

- note position

cardiagn.com

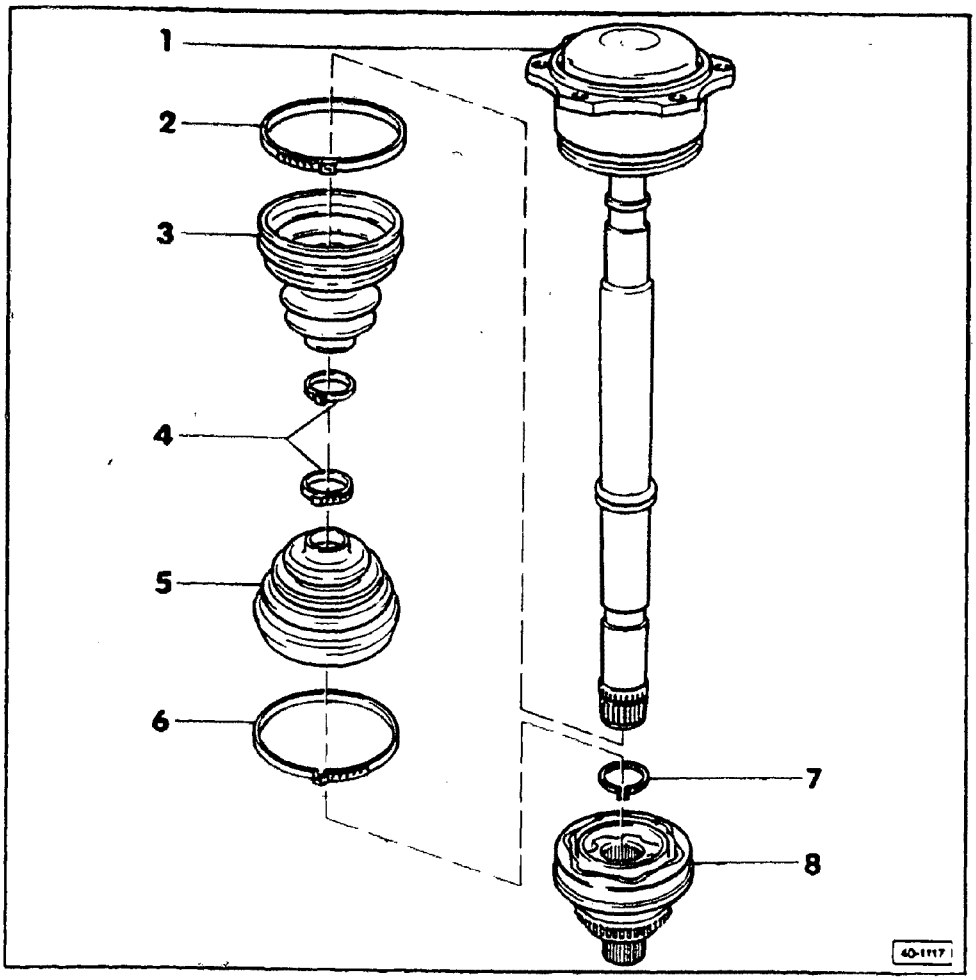

Note

Drive shafts with a revised inner CV joint will be installed in vehicles with the 4-speed automatic transmission 097 and 130 hp engine (code letters NF).

1 — **Drive shaft with inner CV joint**
- supplied as replacement part with boot and grease
- regrease when replacing boot
- grease with 250 grams of **G 000 604** lubricant

2 — **Clamp**
- stainless steel
- always replace
- tightening, Fig. 1

3 — **Boot**
- check for cracks and wear
- to replace press CV joint off
- to install, grease bead on shaft lightly and carefully slide boot on with aid of plastic wedge, Fig. 3

4 — **Clamp**
- stainless steel
- always replace
- tightening, Fig. 1

5 — **Boot**
- check for cracks and wear
- to install, press off outer CV joint

6 — **Clamp**
- stainless steel
- always replace
- tightening, Fig. 1

7 — **Locking ring**
- always replace
- install in ring groove of CV joint

8 — **CV joint, outer**
- replace complete
- pressing off shaft, Fig. 2
- grease with 90 grams of **G 000 604** lubricant — 50 grams in boot, 40 grams in CV joint
- regrease when replacing boot
- to install, drive onto shaft with plastic hammer until lock ring snaps into groove

cardiagn.com

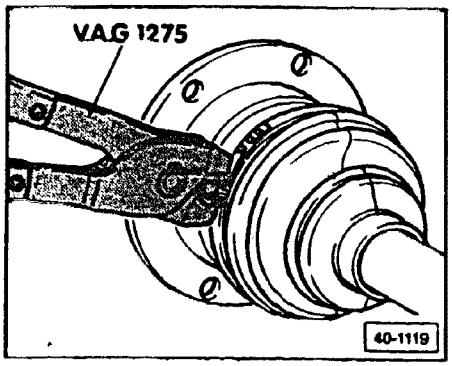

▶ Fig. 1 Clamps, tightening

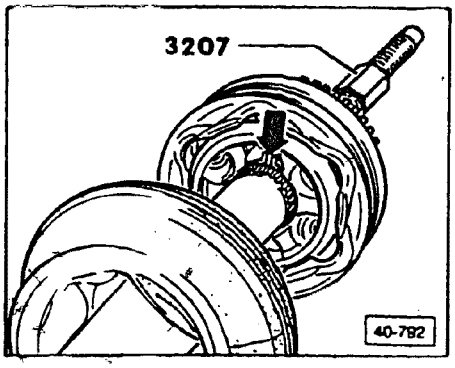

▶ Fig. 2 Outer CV joint, pressing off

- clamp shaft in vice
- push boot back
- open lock ring (arrow)
- thread in M16 side of tool **3207** until CV joint is pushed away from shaft

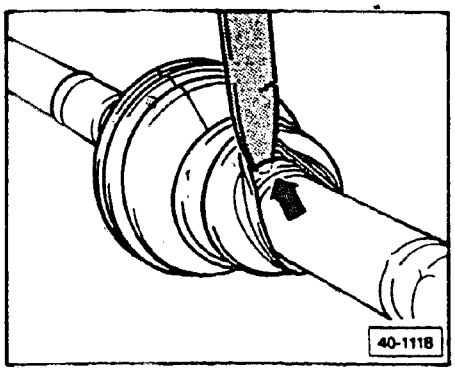

▶ Fig. 3 CV joint boot, installing on shaft

cardiagn.com

Index

Quattro all-wheel drive

Axle shaft
- assembly 40.48

Ball joint
- assembly 40.30
- installing 40.32

Coil spring
- assembly 40.42
- removing/installing 40.43

Control arm
- assembly 40.30
- assembly 20V Sedan 40.35
- assembly Coupe 40.37
- bushings 40.31, 40.36, 40.38

CV joint
- removing/installing 40.49

Link rods
- identifying 40.38

Protective ring
- installing 40.47

Shock absorber
- assembly 40.42
- removing/installing 40.43

Stabilizer bar
- assembly 40.30
- bushings 40.31a

Subframe
- assembly 40.30
- bushings 40.33

Suspension
- revisions for 1990 m.y. 40.30a

Suspension strut
- assembly 40.39
- removing/installing 40.40

Wheel bearing
- assembly 40.44
- housing 40.44
- inner race, removing 40.47
- pressing out/in 40.45

Wheel hub
- assembly 40.44
- pressing out/in 40.45

cardiagn.com

CAUTION

DO NOT attempt to weld or straighten the wheel locating parts of the front suspension.

Note

Suspension revisions for 1990 MY, see page 40.30a.

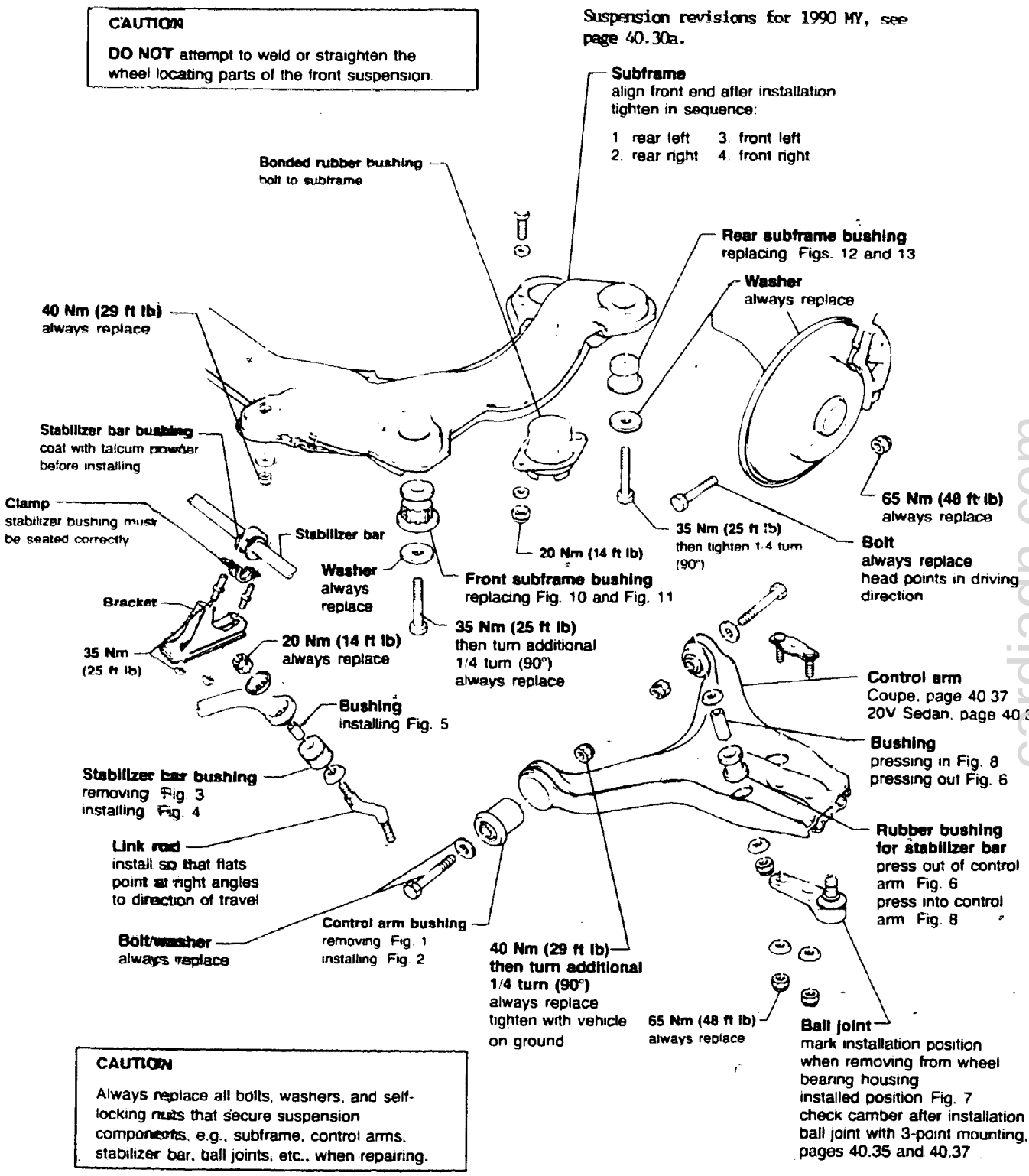

CAUTION

Always replace all bolts, washers, and self-locking nuts that secure suspension components, e.g., subframe, control arms, stabilizer bar, ball joints, etc., when repairing.

cardiagn.com

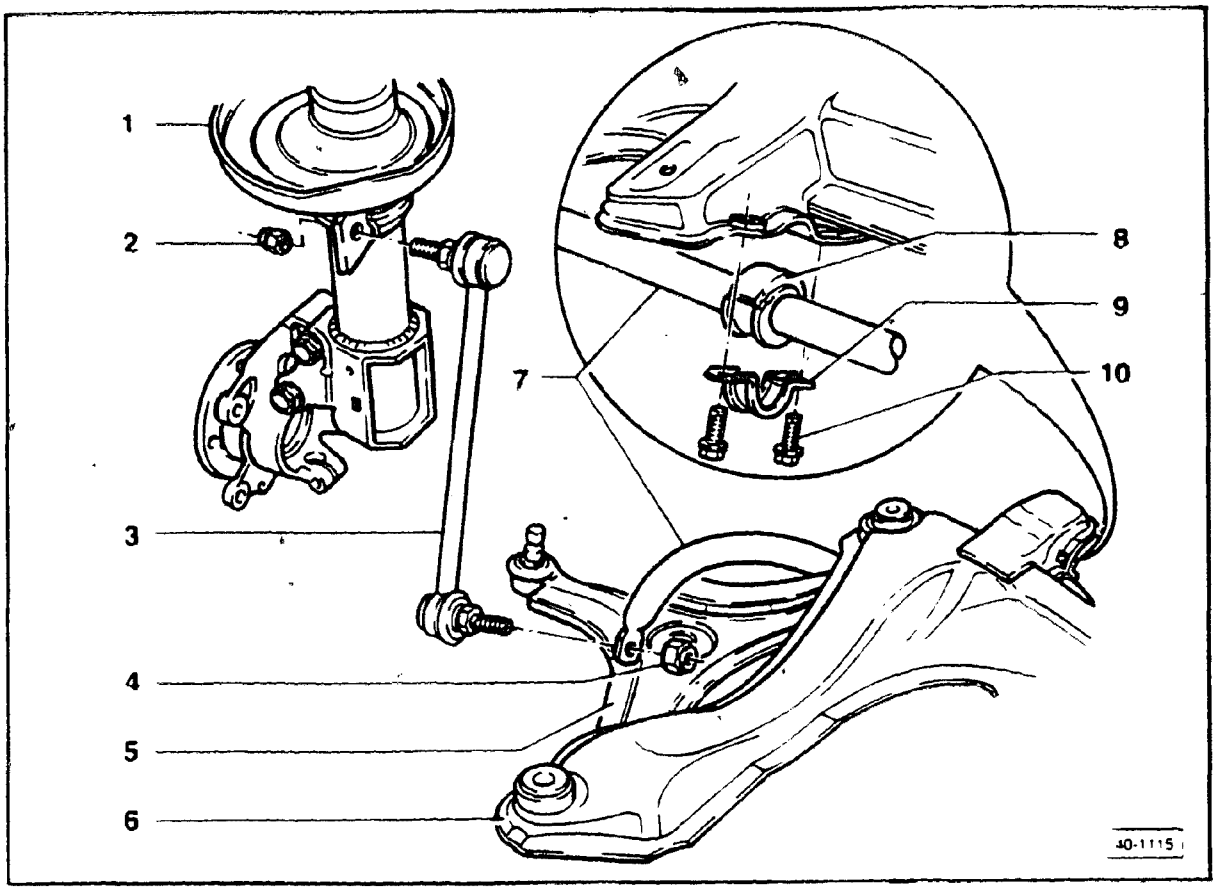

CAUTION

The revised suspension parts must not be installed in earlier vehicles.

1 — **Wheel bearing/shock absorber housing**
with tab for mounting stabilizer link rod
shock absorbers revised

2 — **45 Nm (33 ft lb)**
always replace

3 — **Link rod**

4 — **45 Nm (33 ft lb)**
always replace

5 — **Control arm**
revised to eliminate link rod mounting

6 — **Subframe**

7 — **Stabilizer bar**
revised version

8 — **Rubber bushing**
different diameters depending on stabilizer diameter

9 — **Clamp**
revised from previous version

10 — **35 Nm (26 ft lb)**
always replace
tighten only with vehicle on ground

cardiagn.com

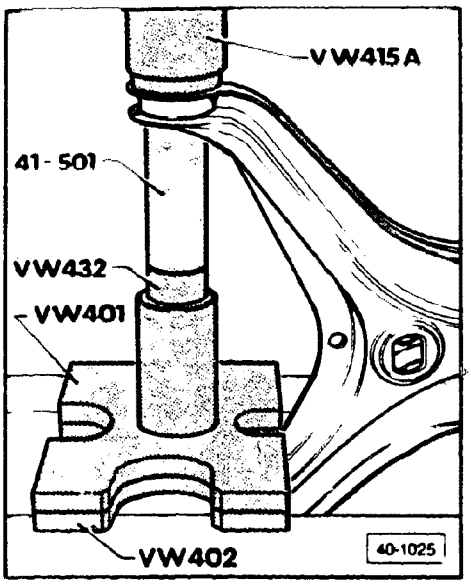

▶ **Fig. 1 Control arm bushing, removing**

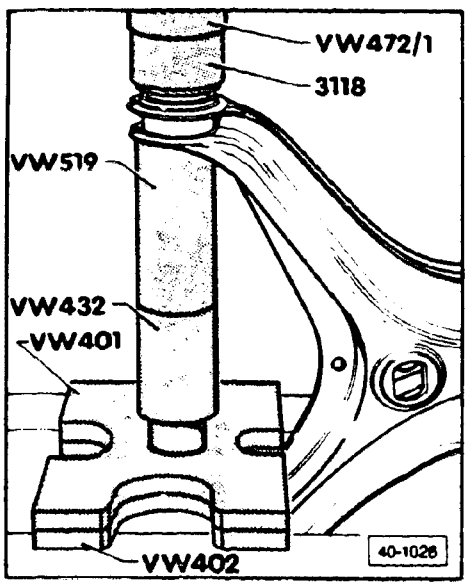

▶ **Fig. 2 Control arm bushing, installing**

- install bushing to stop

cardiagn.com

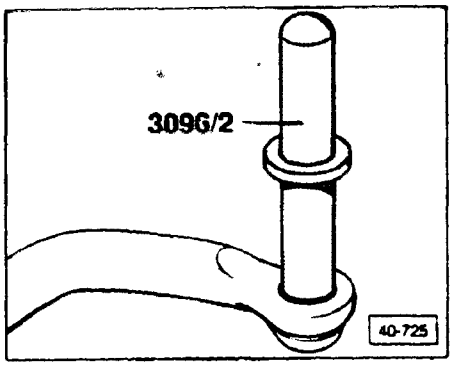

▶ **Fig. 3 Stabilizer bar bushing, pressing out**

- cut collar off rubber bushing

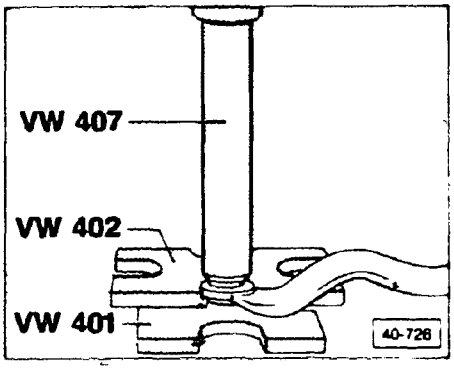

▶ **Fig. 4 Stabilizer bar bushing, pressing in**

- apply acid-free lubricant before installation

cardiagn.com

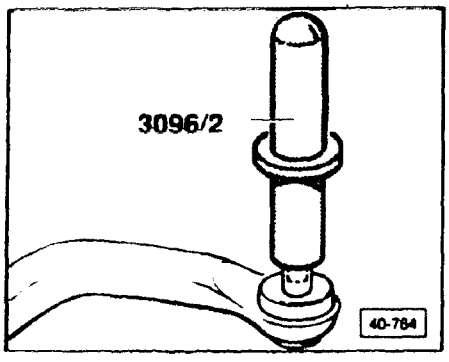

▶ **Fig. 5 Bushing, pressing in**

- coat bushing with acid-free lubricant before installing

Note

Inner bushing must be aligned in center of rubber bushing.

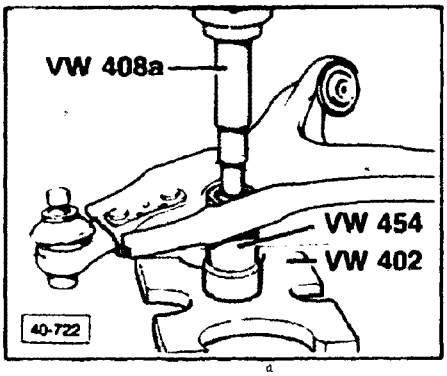

▶ **Fig. 6 Rubber bushing in control arm, pressing out**

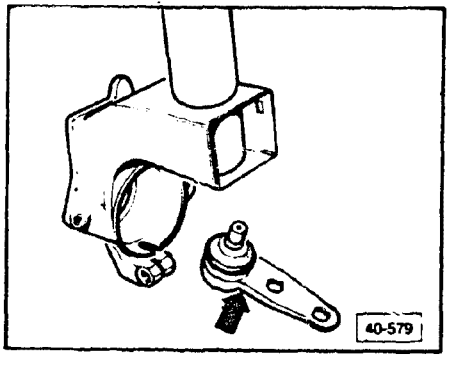

▶ **Fig. 7 Ball joint, installing**
(right side shown)

- offset faces in direction of vehicle travel (arrow)
- **DO NOT** expand slot on wheel bearing housing

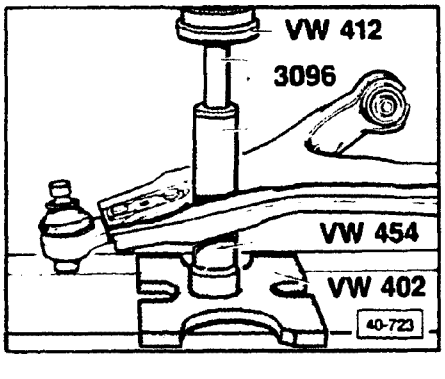

▶ **Fig. 8 Rubber bushing in control arm, pressing in**

- coat rubber bushing and inner section of sleeve **3096/1** with acid-free lubricant

cardiagn.com

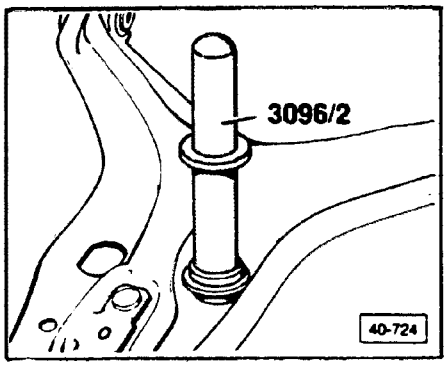

▶ **Fig. 9 Bushing, pressing in**

- lubricate bushing with acid-free lubricant before installing

Note

Inner bushing must be aligned in center of rubber bushing.

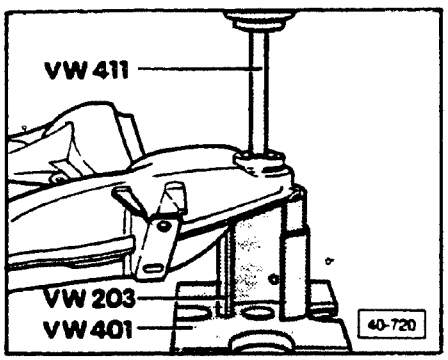

▶ **Fig. 10 Front subframe bushing, pressing out**

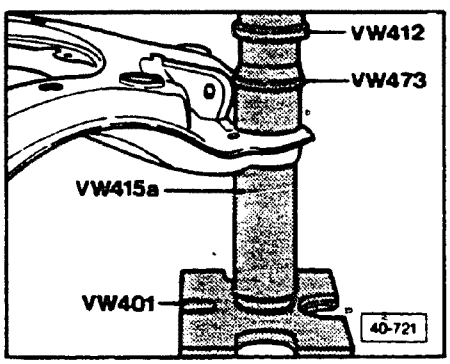

▶ **Fig. 11 Front subframe bushing, pressing in**

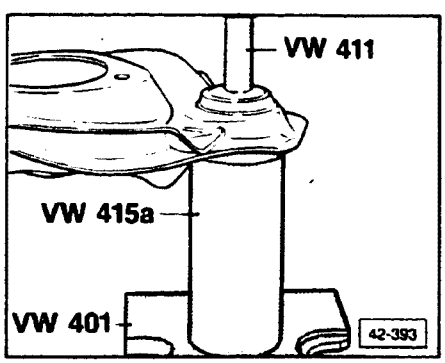

▶ **Fig. 12 Rear subframe bushing, pressing out**

cardiagn.com

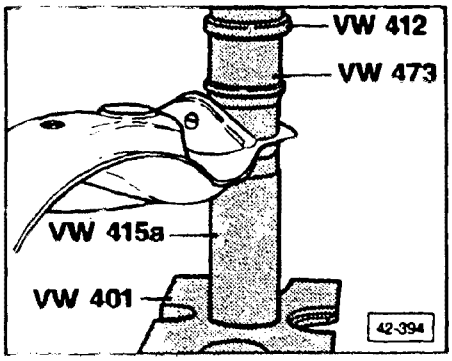

▶ **Fig. 13 Rear subframe bushing, pressing in**

- apply acid-free lubricant before installing

cardiagn.com

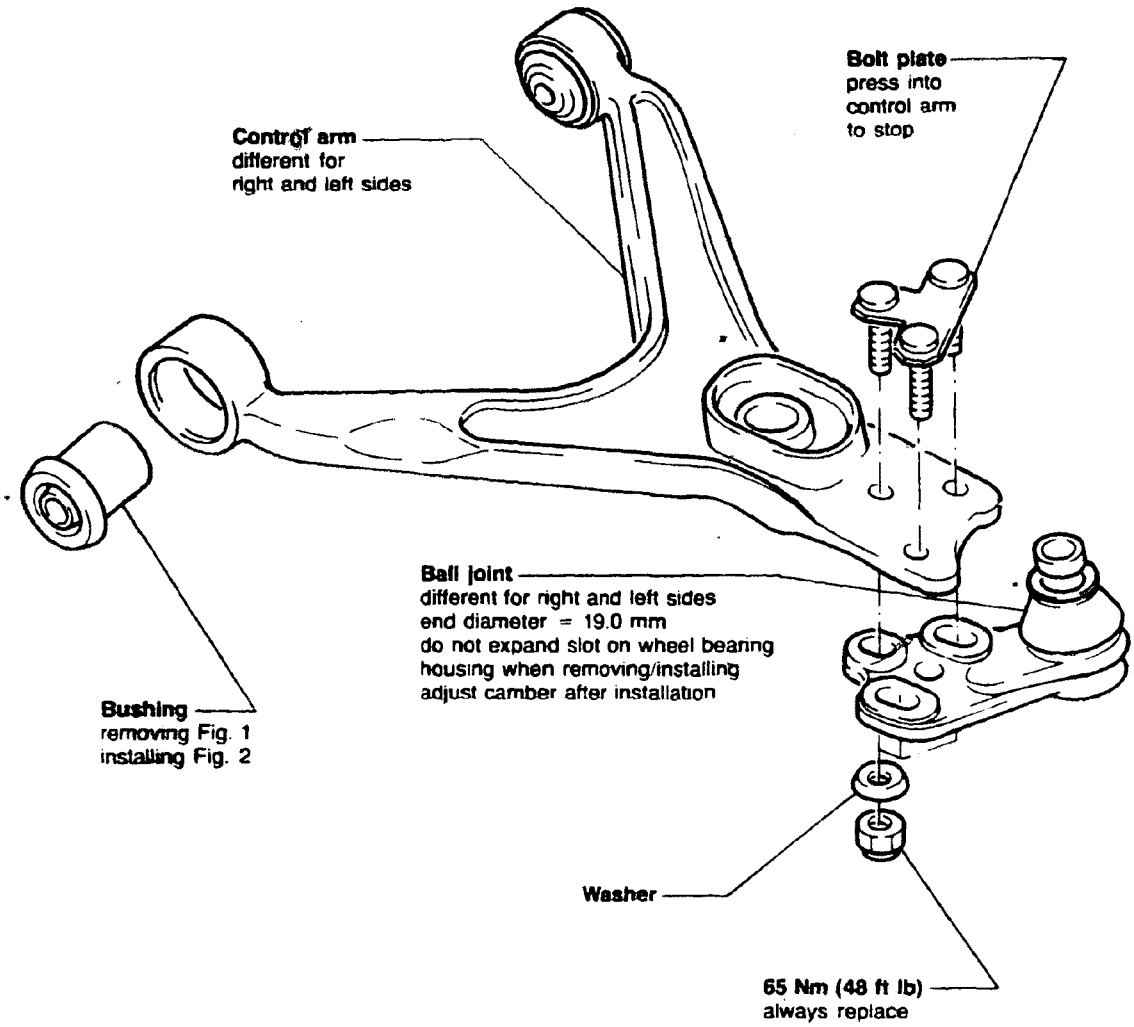

40-787

cardiagn.com

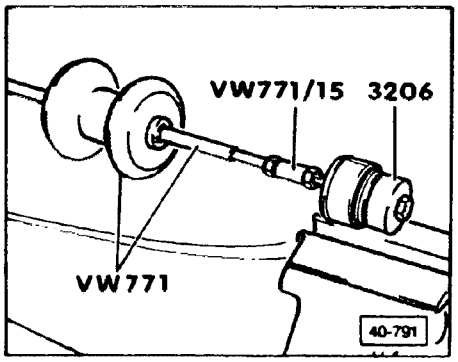

Fig. 1 Control arm bushing, removing

- mount control arm in vise (use jaw covers)
- remove with 3206

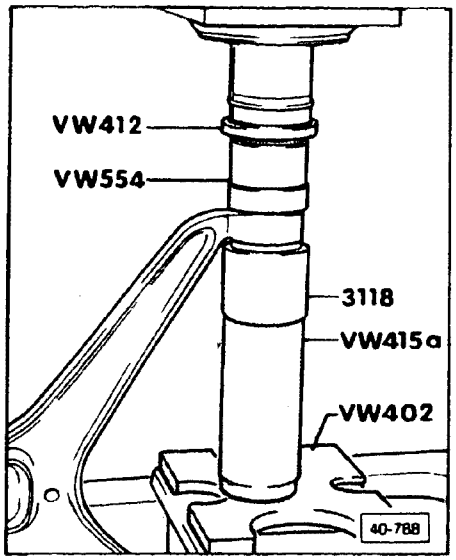

Fig. 2 Control arm bushing, installing

- press in up to stop

cardiagn.com

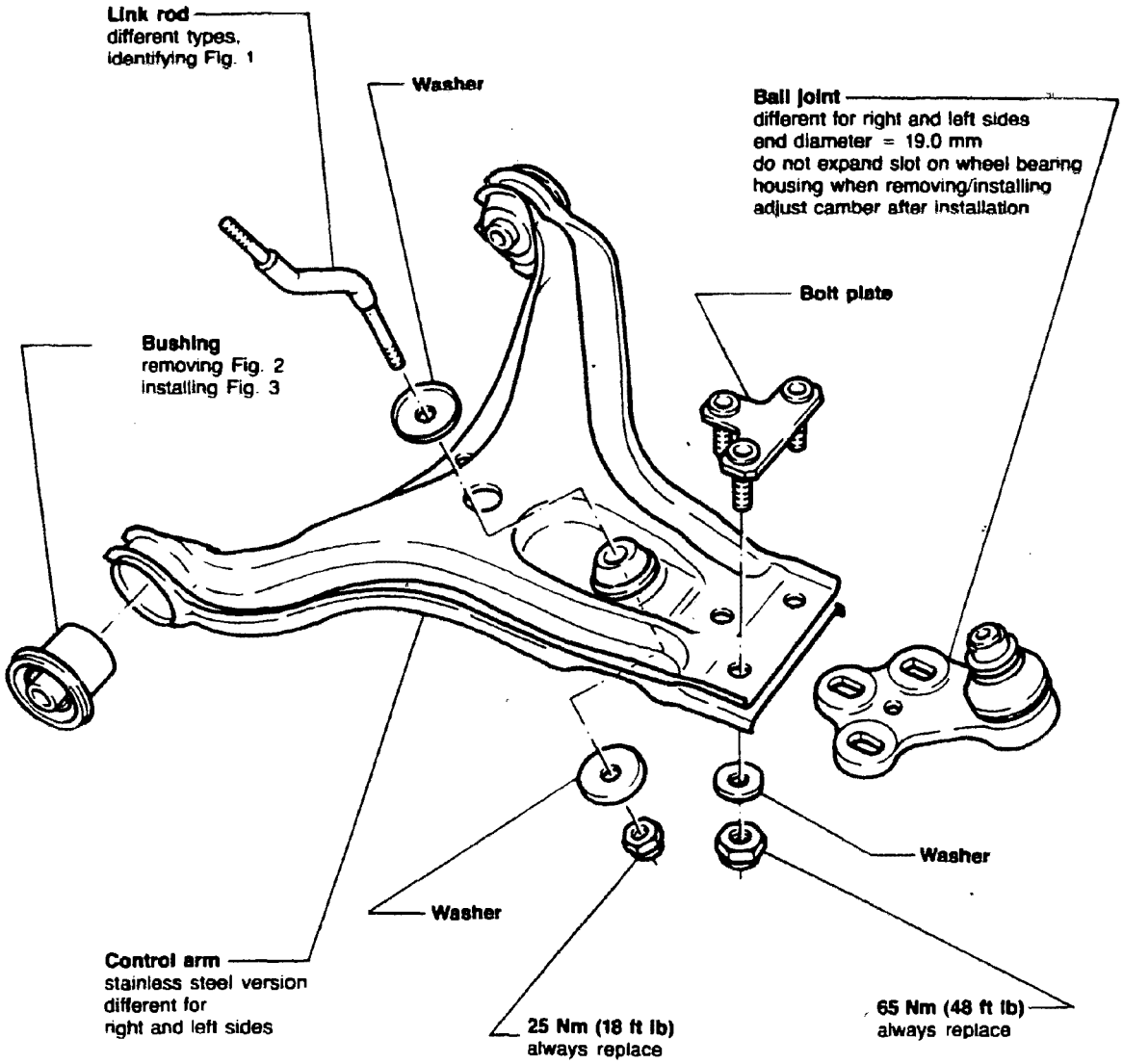

40-1107

cardiagn.com

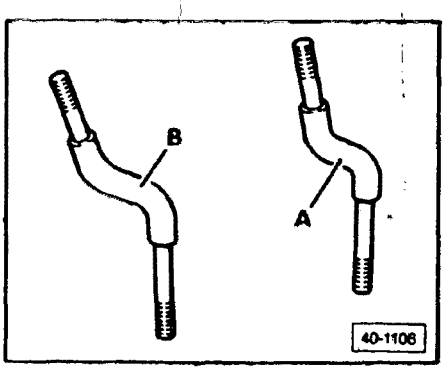

▶ **Fig. 1 Link rods, identifying**

A = Coupe
B = Sedan

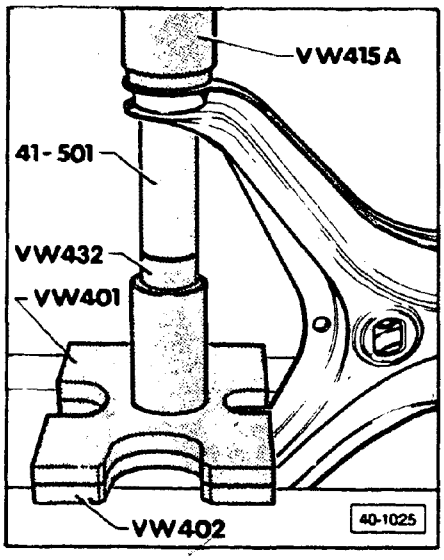

▶ **Fig. 2 Control arm bushing, removing**

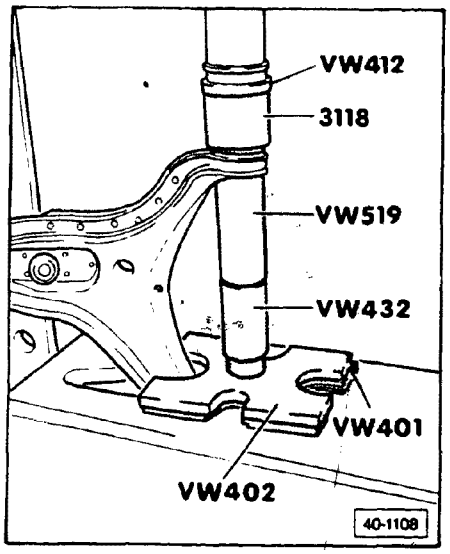

▶ **Fig. 3 Control arm bushing, installing**

- press bearing in up to stop

cardiagn.com

CAUTION

If vehicles have to be moved after removing an axle shaft, an outer joint has to be installed in place of the axle shaft to avoid damaging the wheel bearing.

CAUTION

Always replace all self-locking nuts securing suspension components, e.g., suspension strut/wheel bearing housing, tie rod, etc., when repairing.

CAUTION

Always align front end after installation of suspension strut.

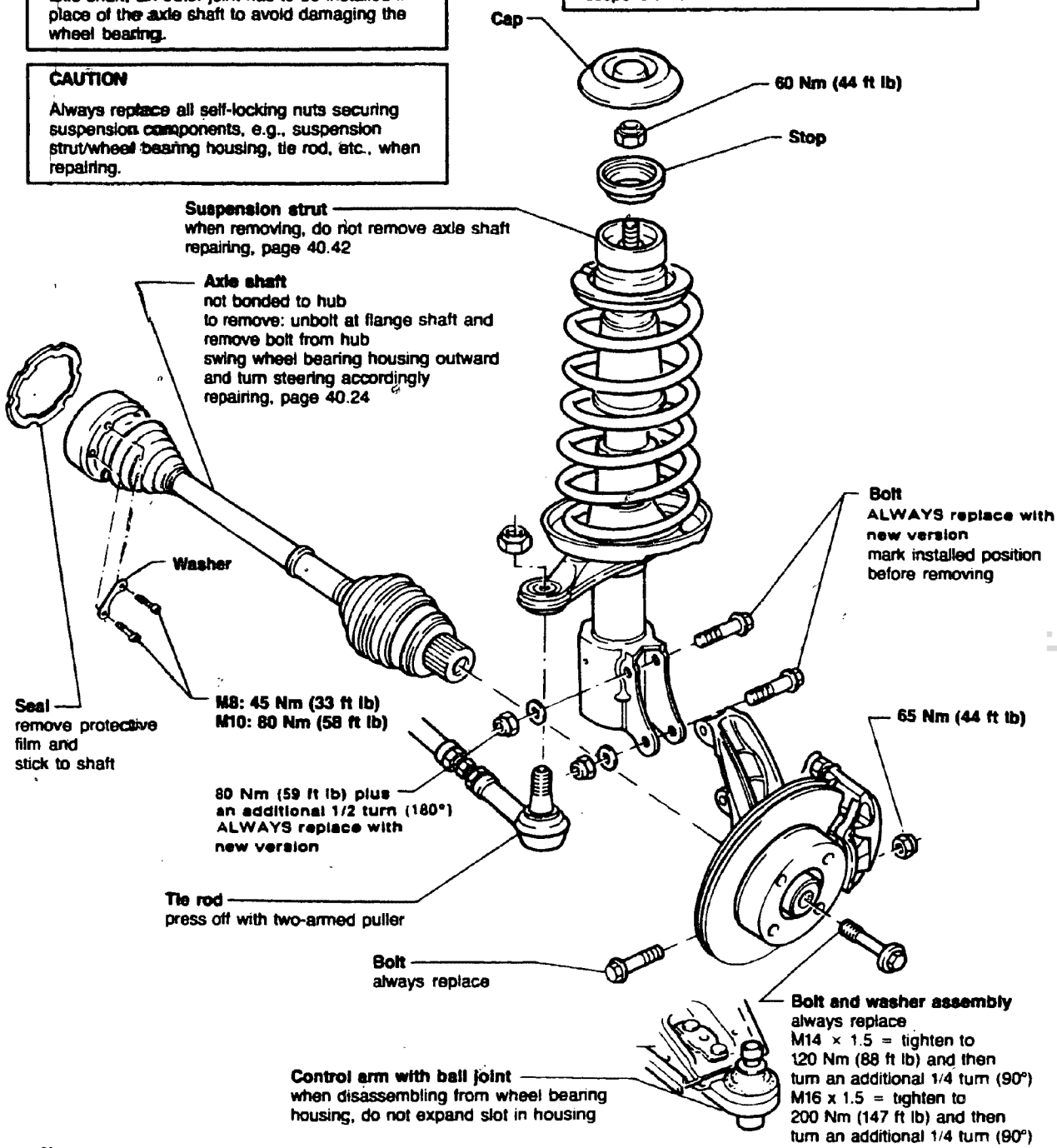

Note

All vehicles with 5-cylinder engines have the front suspension with a forged wheel bearing housing.

cardiagn.com

Suspension strut, removing/installing

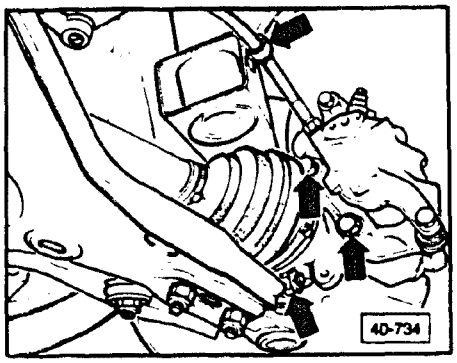

Removing

- loosen wheel bolts
- remove hub/axle shaft bolt (vehicle standing on its wheels)
- remove washer
- remove wheel
- remove brake caliper bolts and brake caliper (**middle arrows**)

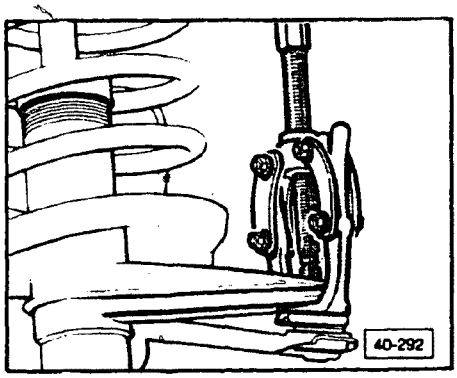

- remove brake disc
- remove bracket for brake hose (**upper arrow**) and fasten caliper to body with wire
- remove mounting bolt for ball joint to wheel bearing housing (**lower arrow**)

- press off tie rod end

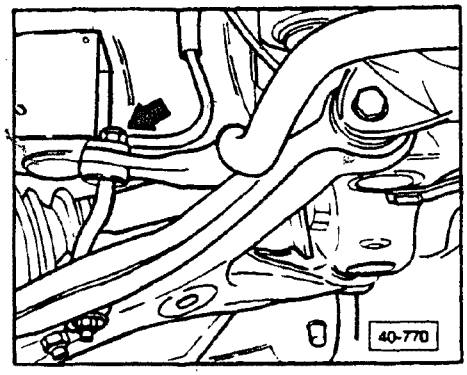

- remove nut from link rod (**arrow**)
- pry down on control arm to remove ball joint from wheel bearing housing

Note

While prying ball joint out move steering wheel alternately from left to right (2 mechanics required).

cardiagn.com

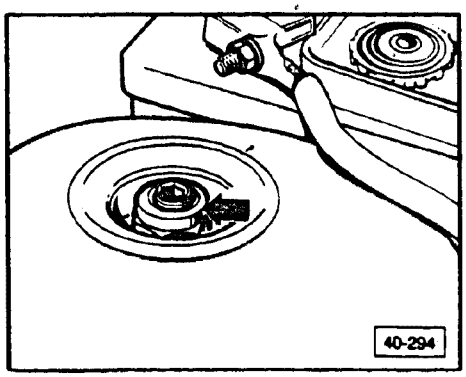

- remove cover plate
- support suspension strut from below
- loosen nut from shock absorber (**arrow**) while holding piston rod with internal socket wrench

Installing

Proceed in reverse order of removal and note the following:

> **CAUTION**
>
> Splines on axle shaft and wheel hub must be free of oil and grease.

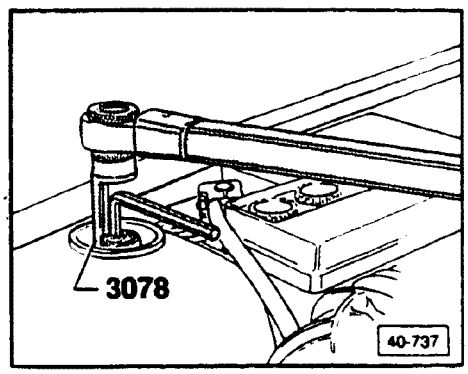

- torque shock absorber nut while holding piston rod
  - 60 Nm (44 ft lb)

cardiagn.com

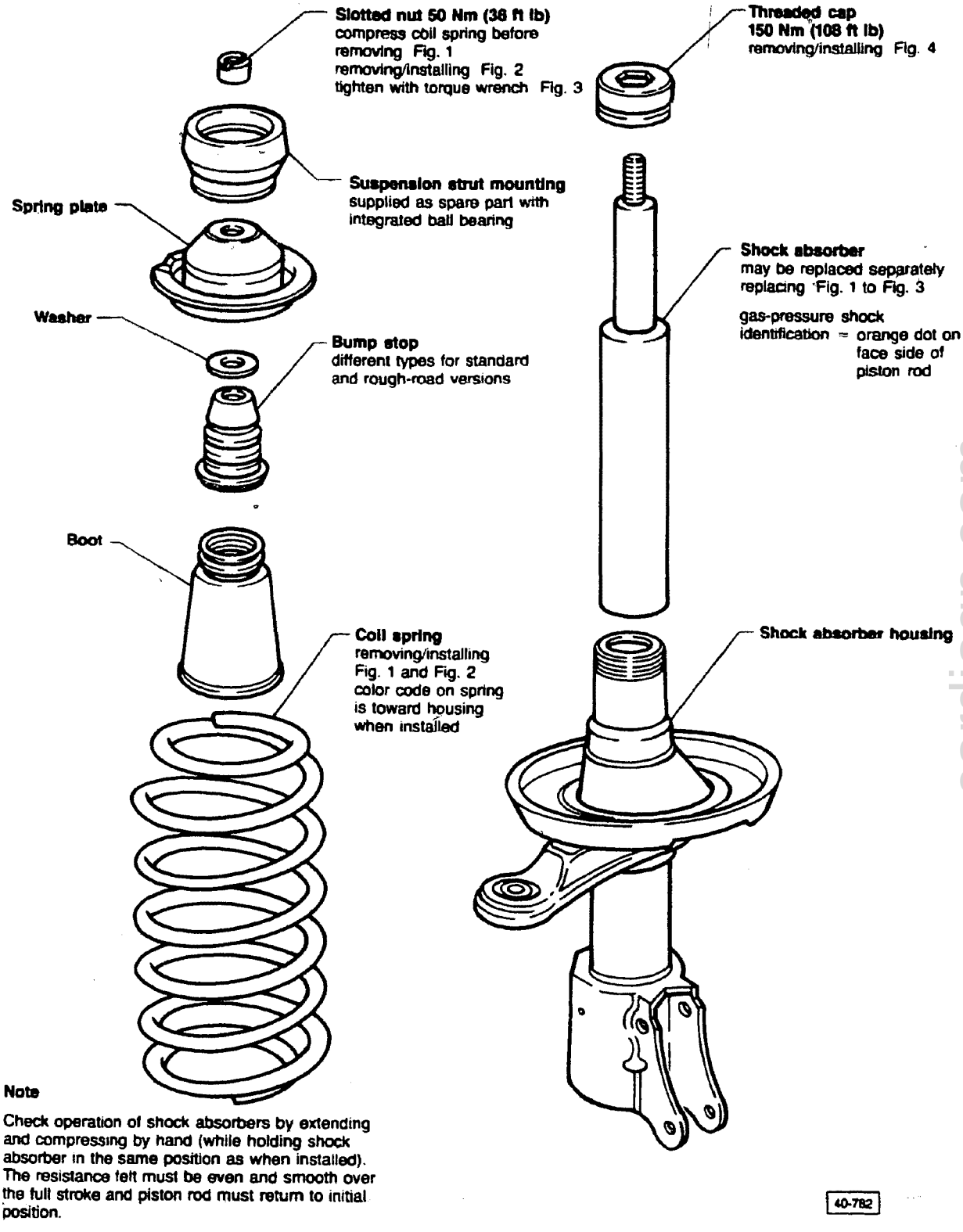

Note

Check operation of shock absorbers by extending and compressing by hand (while holding shock absorber in the same position as when installed). The resistance felt must be even and smooth over the full stroke and piston rod must return to initial position.

cardiagn.com

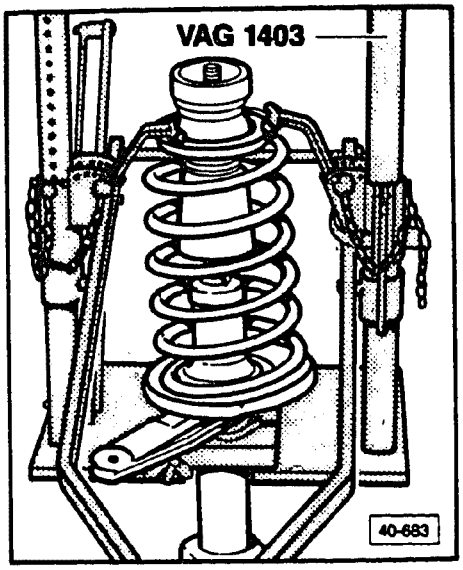

▶ **Fig. 1 Coil spring, removing/installing**

Note

If tool **VAG 1403** is not available, use tool **VW 340**.

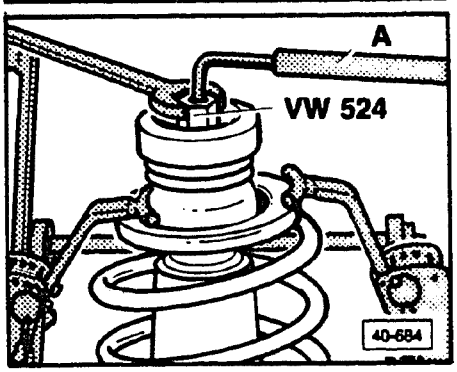

▶ **Fig. 2 Coil spring, removing/installing**

- hold shock absorber shaft with internal socket wrench

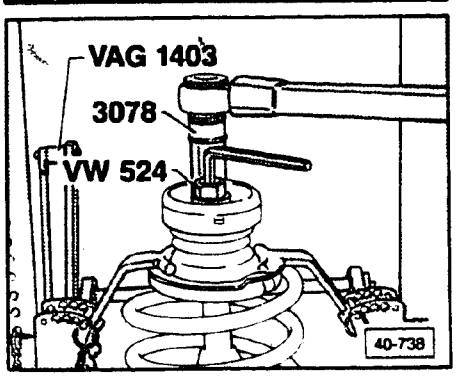

▶ **Fig. 3 Shock absorber, installing**

- tighten slotted nut to 50 Nm (36 ft lb)

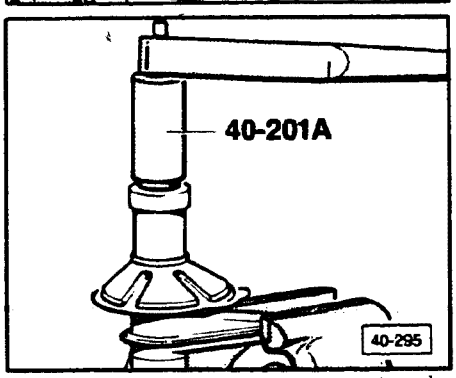

▶ **Fig. 4 Threaded cap, removing/installing**

cardiagn.com

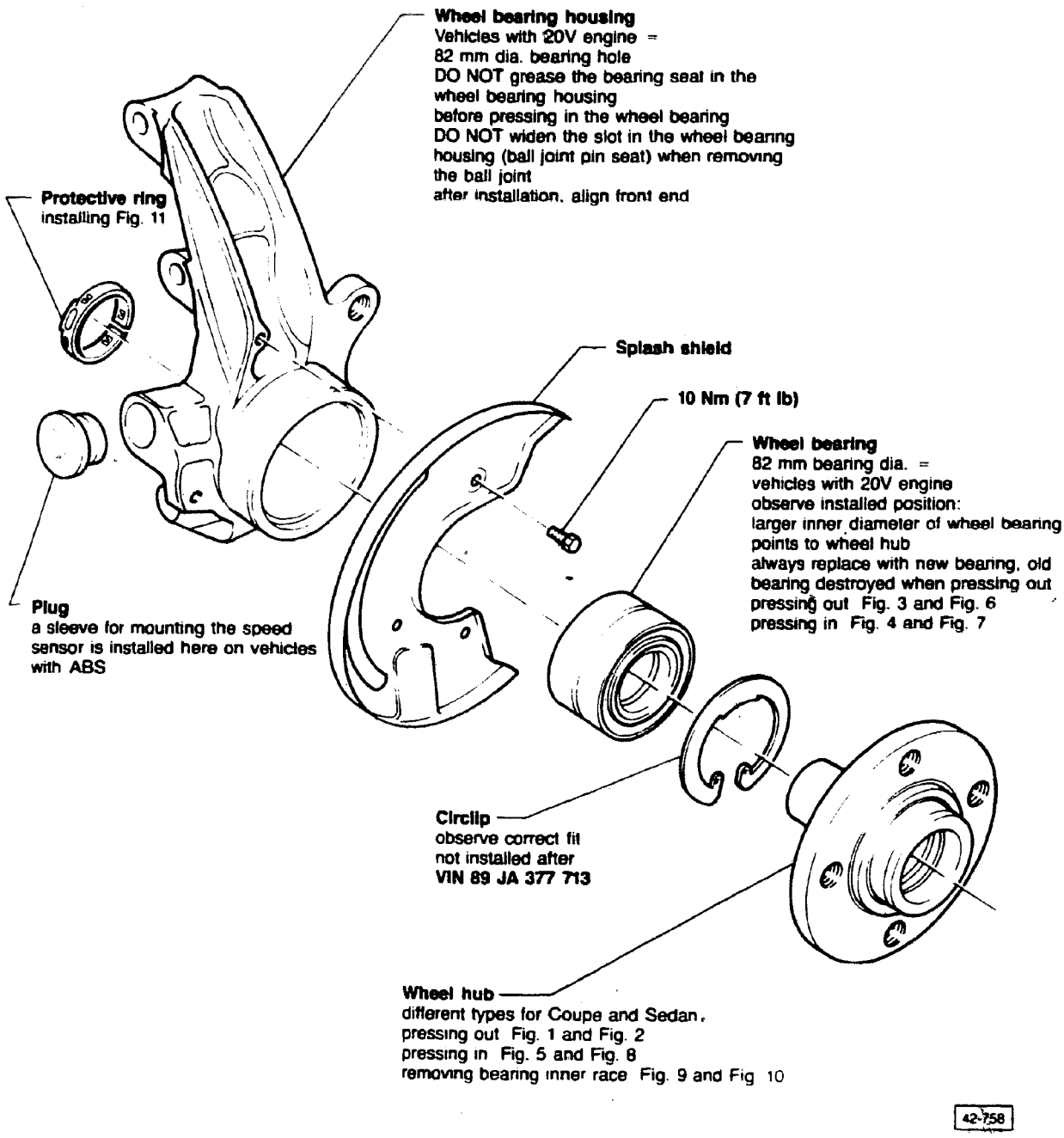

cardiagn.com

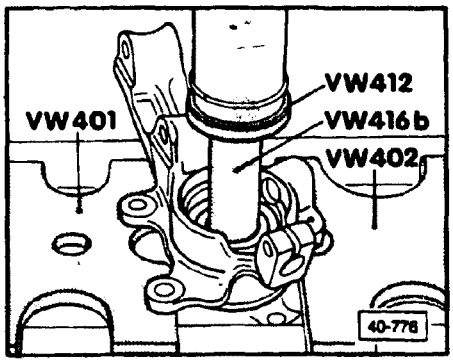

▶ **Fig. 1 Wheel hub (75 mm diameter wheel bearing), pressing out**

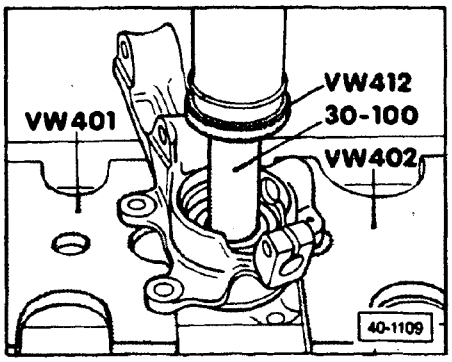

▶ **Fig. 2 Wheel hub, (82 mm diameter wheel bearing), pressing out**

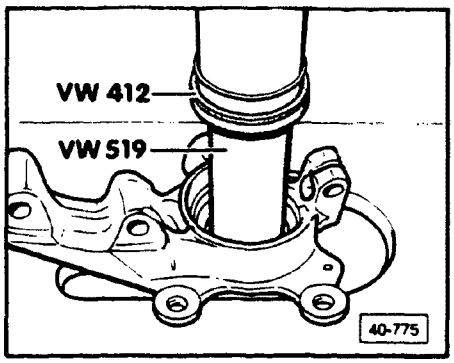

▶ **Fig. 3 Wheel bearing (75 mm diameter), pressing out**

- first remove circlip

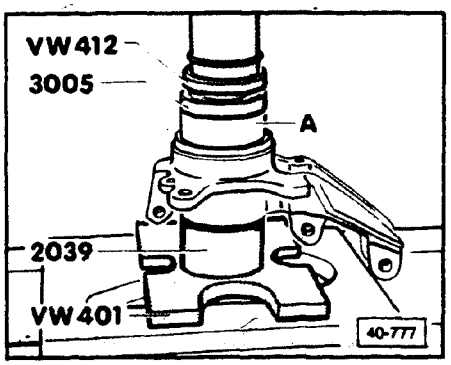

▶ **Fig. 4 Wheel bearing (75 mm diameter), pressing in**

- larger diameter of wheel bearing points to wheel hub

cardiagn.com

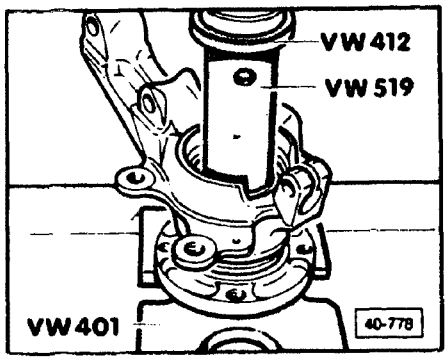

▶ **Fig. 5 Wheel hub (75 mm diameter wheel bearing), pressing in**

Note

Tool **VW519** must only support the wheel bearing inner race.

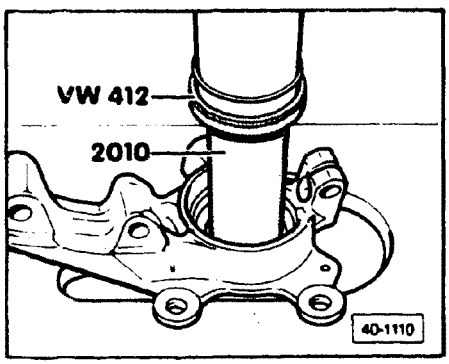

▶ **Fig. 6 Wheel bearing (82 mm diameter), pressing out**

- first remove circlip

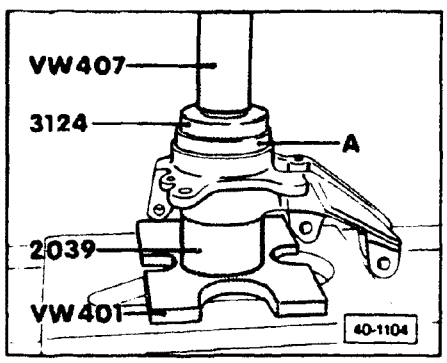

▶ **Fig. 7 Wheel bearing (82 mm diameter), pressing in**

- larger diameter of wheel bearing points to wheel hub

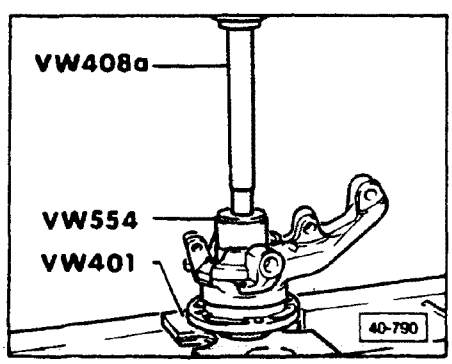

▶ **Fig. 8 Wheel hub (82 mm diameter wheel bearing), pressing in**

Note

Tool **VW519** must only support the wheel bearing inner race.

cardiagn.com

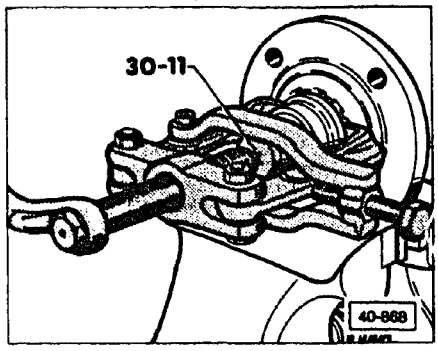

▶ **Fig. 9 Wheel bearing (75 mm diameter) inner race, removing**

Note

Use an extractor with a clamp, e.g. **Kukko 204-1**.

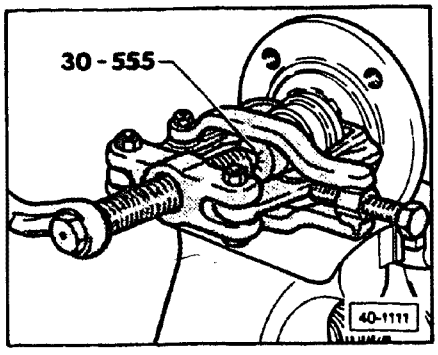

▶ **Fig. 10 Wheel bearing (82 mm diameter) inner race, removing**

Note

Use an extractor with a clamp,e.g. **Kukko 204-1**.

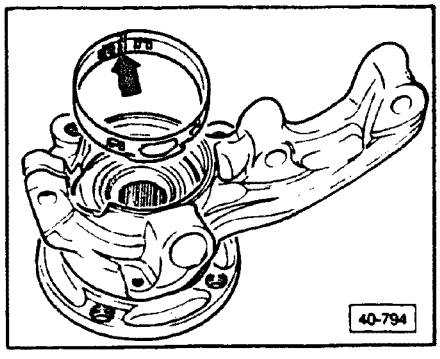

▶ **Fig. 11 Protective ring, installing in wheel bearing housing**

- before installing, coat wheel bearing housing bore in protective ring area with oil
- press ring in by hand until tabs lock
  - ring must not overlap (**arrow**)

Note

Vehicles not produced with a protective ring must not be supplied with one later.

cardiagn.com

Note

Grease packing on **Quattro** vehicles: grease inner and outer CV-joint with 90g each of G-6 grease.

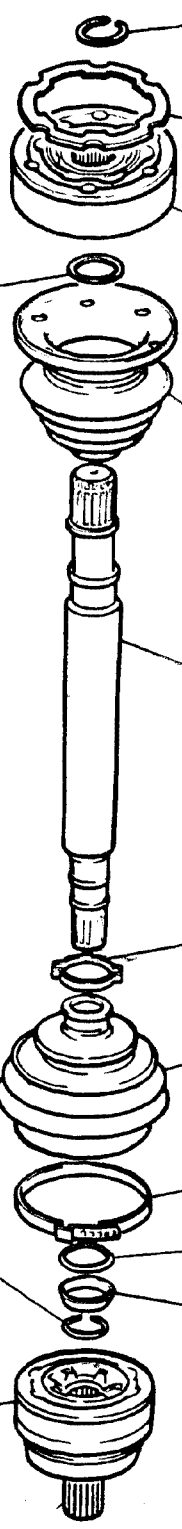

Circlip
removing/installing Fig. 5

Seal
replacing, remove protective film and stick onto joint

CV-joint inner
outer diameter:
Quattro: 100 mm

pressing off Fig. 6
pressing on Fig. 7

Dished washer
Note 2 types:
1 — with inner splines
2 — without inner splines
when replacing reinstall the same type
installed position Fig. 8

Boot with cap
prior to installation on CV-joint seal face side with **D-3**

Shaft
varying lengths between left and right

Clip
tightening Fig. 1

Boot
check for cracks and abrasion
ventilating Fig. 2

Circlip
installed position Fig. 3
install into ring groove of shaft (not visible with installed joint)

Hose clamp
tensioning Fig. 1

Dished washer
installed position Fig. 3

Thrust washer
installed position Fig. 3

CV-joint, outer
replace complete only
installed position Fig. 4
installing: drive joint onto shaft with plastic hammer until circlip is engaged

40-767

cardiagn.com

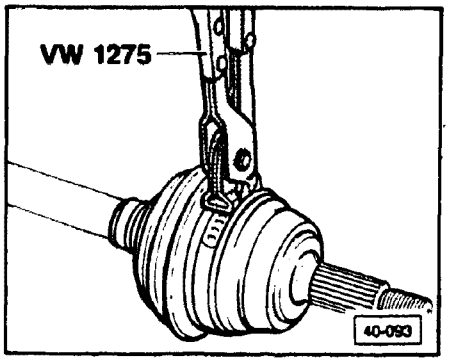

▶ **Fig. 1 Clamp, tensioning**

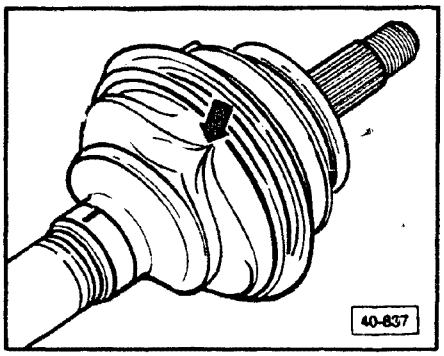

▶ **Fig. 2 Boot ventilating**

Note

Boot can be pressed in during installation causing an inward fold (**arrow**) during vehicle operation. After installing, pull the small diameter end of the boot open momentarily to allow the pressure to equalize. This venting of the boot will prevent an inward fold.

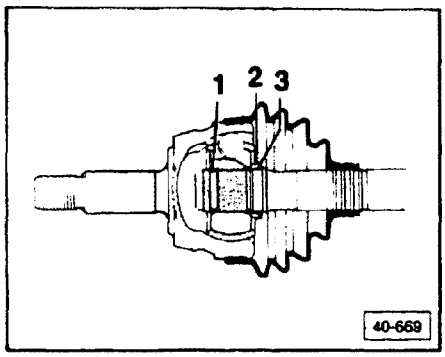

▶ **Fig. 3 Dished washer, thrust washer installed position**

1 — circlip
2 — thrust washer
3 — dished washer

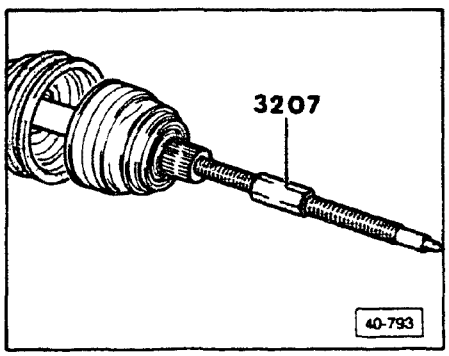

▶ **Fig. 4 CV-joint (outer), removing**

- clamp shaft in vise
- pull back boot
- thread in special tool until CV-joint pushes away from shaft

cardiagn.com

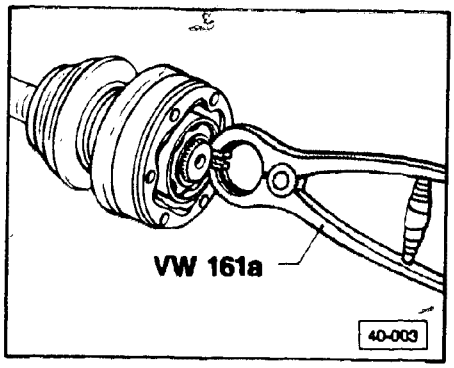

▶ **Fig. 5 CV-joint (inner) circlip, removing**

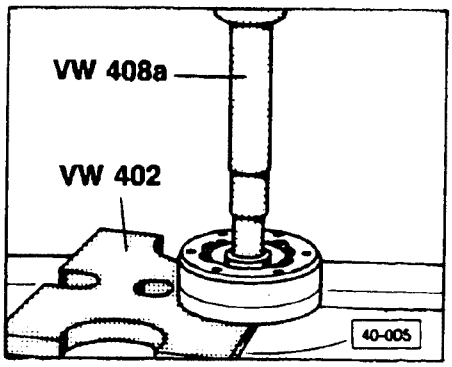

▶ **Fig. 6 CV-joint (inner), removing**

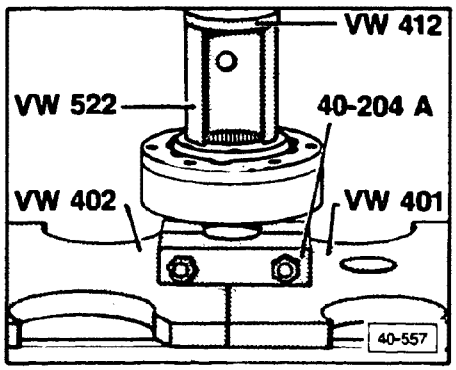

▶ **Fig. 7 CV-joint circlip, installing**

- press joint on to stop
- insert circlip

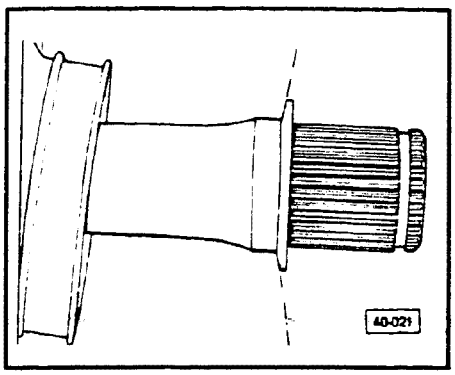

▶ **Fig. 8 Dished washer, installing**

- note position

cardiagn.com

Index

Two-wheel drive

ABS rotor
- pressing in 42.5

Bonded rubber bushings
- replacing 42.3

Grease cap
- removing 42.5

Rear Axle
- assembly 42.2
- installing 42.7
- removing 42.6

Shock absorber
- assembly 42.8
- noise 42.9

Spring plate
- installing 42.9

Suspension strut
- assembly 42.8
- removing 42.7

Wheel hub/axle
- assembly 42.4
- bearing 42.5
- bearing adjusting 42.2

cardiagn.com

CAUTION

DO NOT attempt to weld or straighten the axle beam

CAUTION

Always replace self-locking nuts used to secure rear suspension components when repairing.

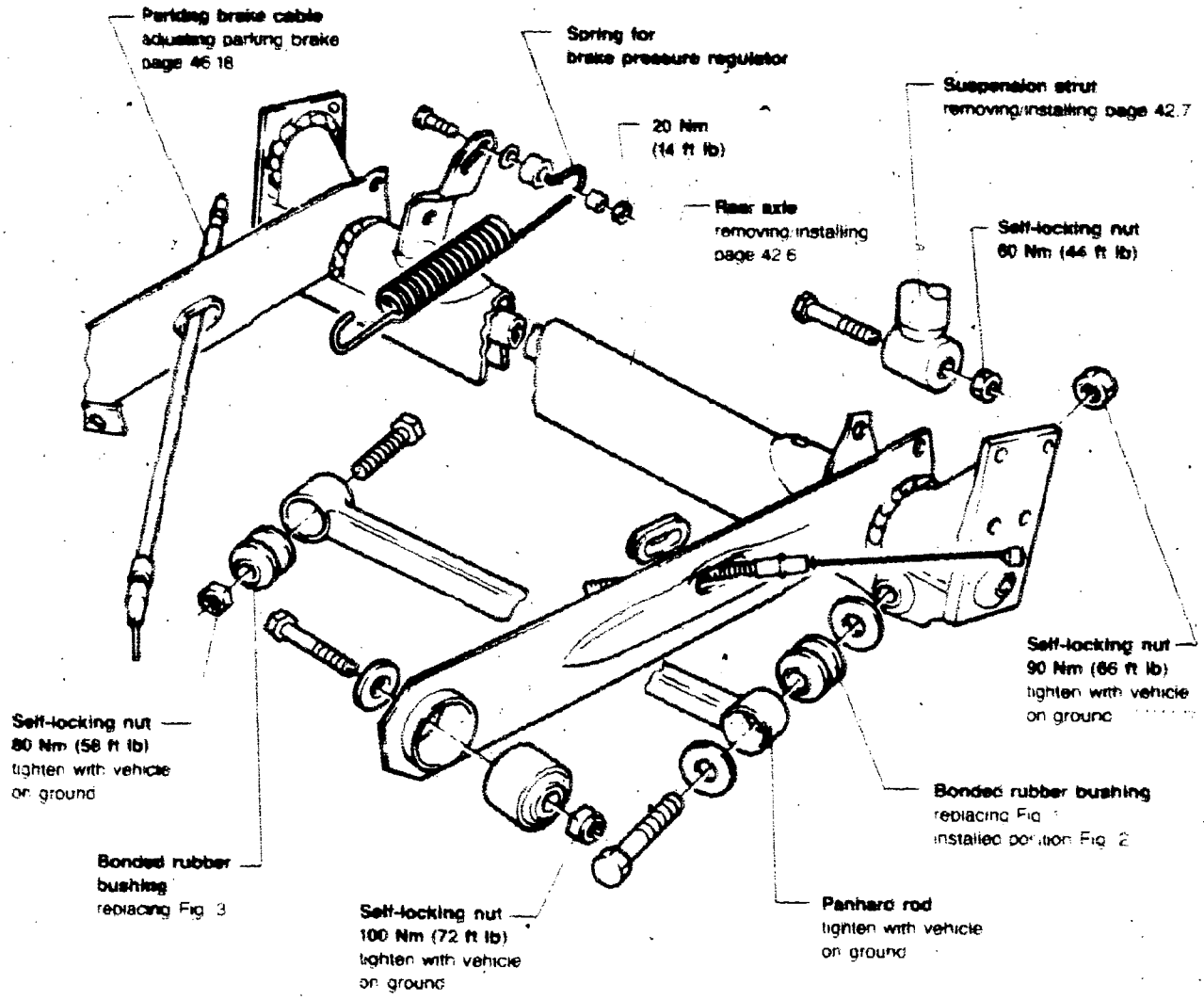

cardiagn.com

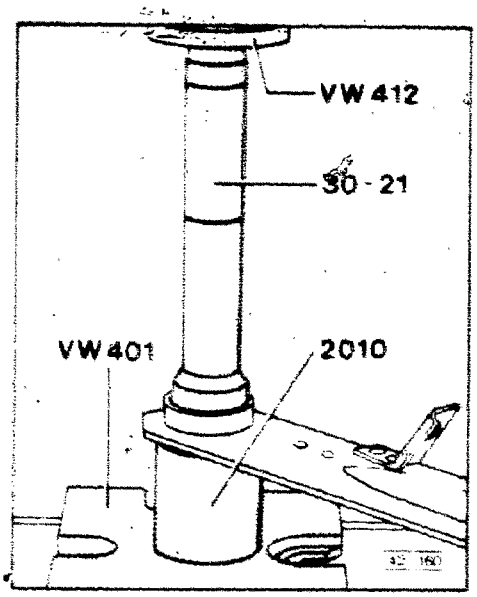

▶ **Fig. 1 Bonded rubber bushing, replacing**

■ press bushing in flush

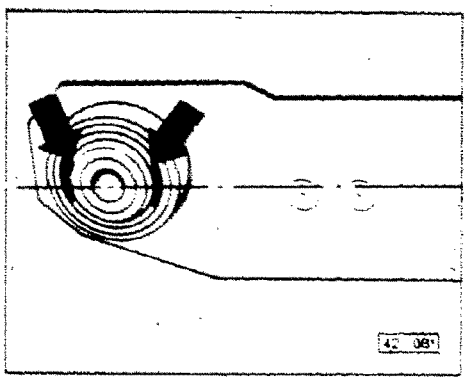

▶ **Fig. 2 Installed position of rubber bushing**

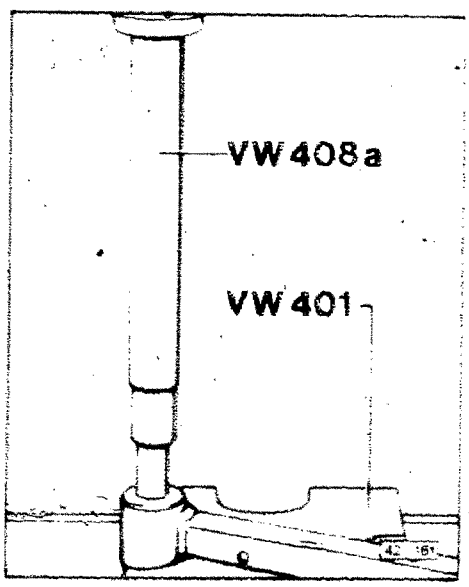

▶ **Fig. 3 Bonded rubber bushing, replacing**

cardiagn.com

Rear Wheel Suspension – Shafts & Axle

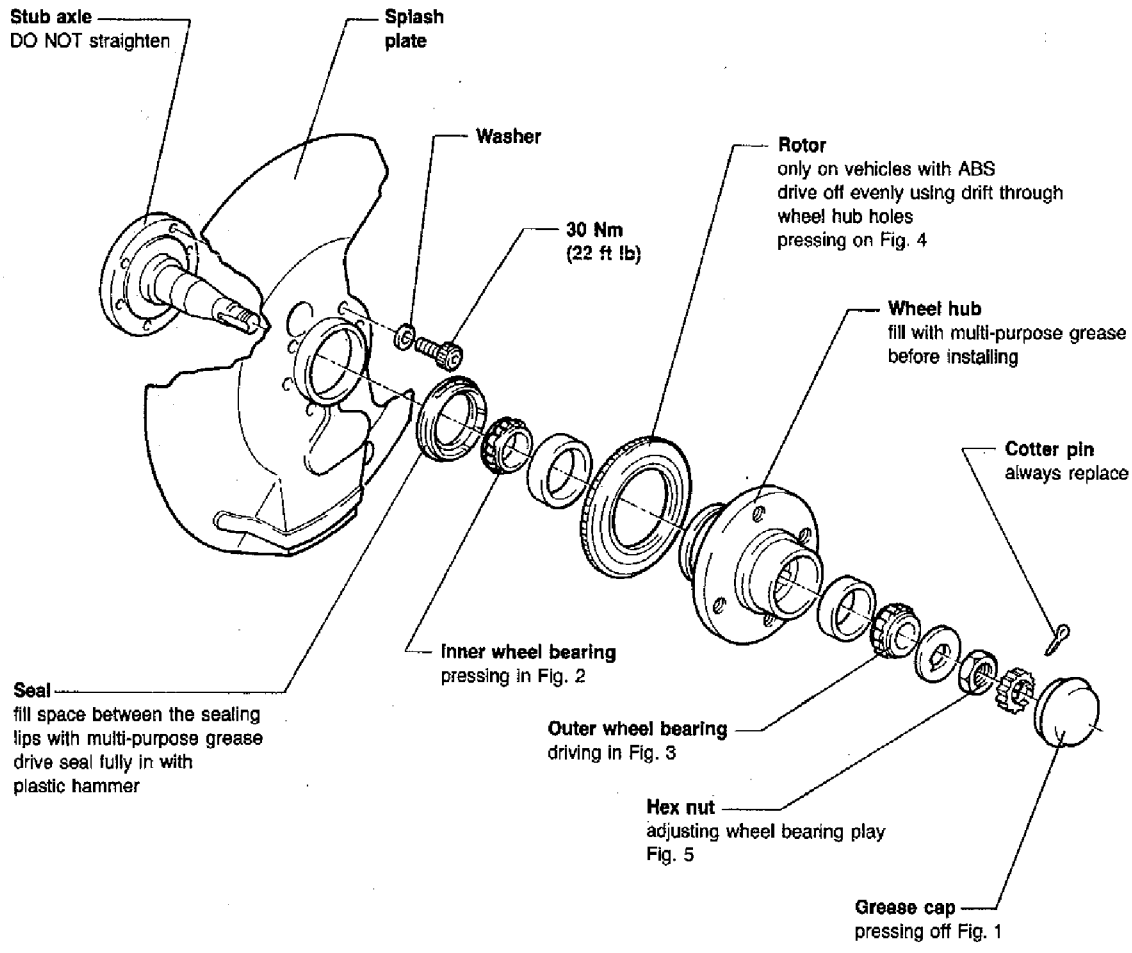

cardiagn.com

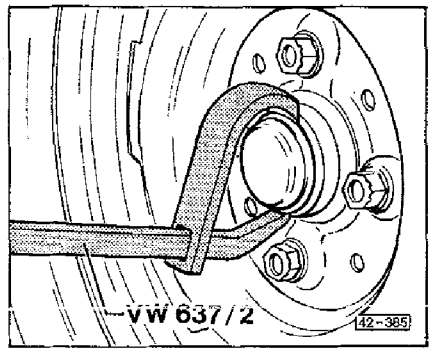

▶ **Fig. 1 Grease cap, pressing off**

- move grease cap slightly off wheel hub by lightly tapping claw of special tool with a hammer

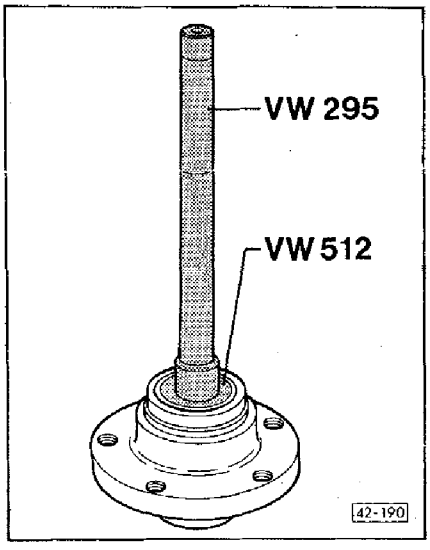

▶ **Fig. 2 Inner wheel bearing outer race, pressing in**

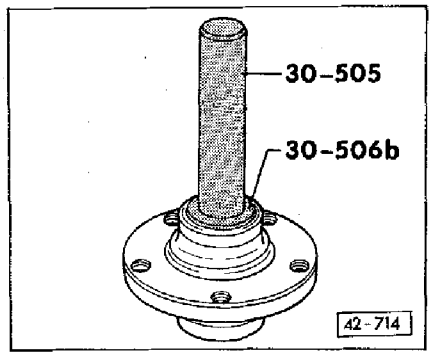

▶ **Fig. 3 Outer wheel bearing outer race, driving in**

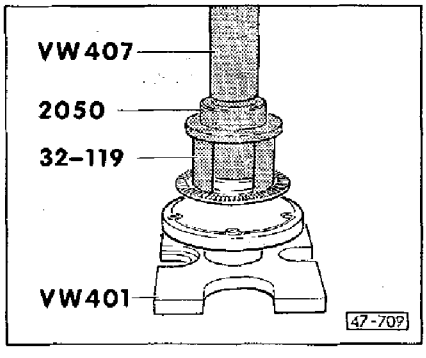

▶ **Fig. 4 Rotor, pressing in (vehicles with ABS)**

cardiagn.com

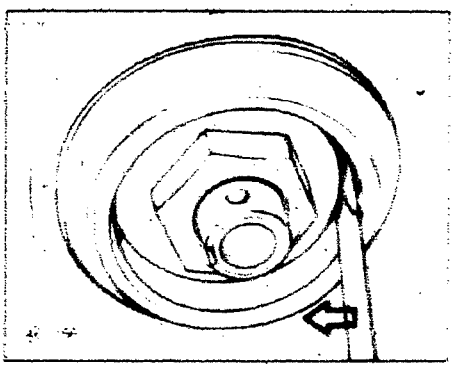

▶ **Fig. 5 Wheel bearing play, adjusting**

Note

The wheel bearing is correctly adjusted when the thrust washer can just be moved with a screwdriver (**arrow**), using finger pressure (not by turning or prying).

Rear axle, removing/installing

Work sequence

Removing

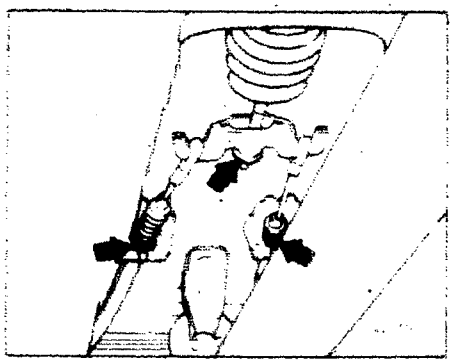

▶

- remove rear wheels
- remove compensator bar (**top arrow**)
- remove handbrake cable from clips at support bracket (**lower arrows**)

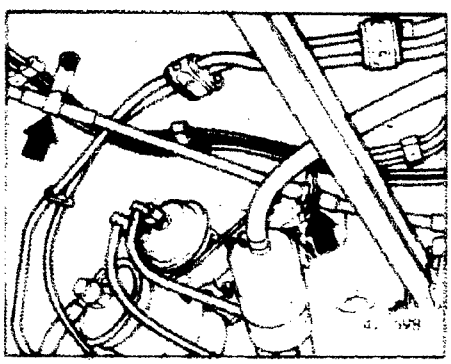

▶

- pry guide sleeves for handbrake cable out of support brackets (**arrows**)

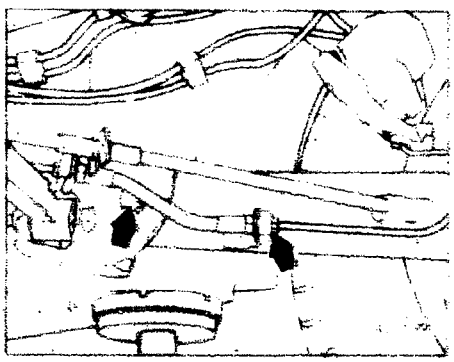

▶

- disconnect brake lines from brake hoses (**right arrow**)
- remove nuts from trailing link mounting bolts (**left arrow**). DO NOT take bolts out
- disconnect brake pressure regulator spring at rear axle

cardiagn.com

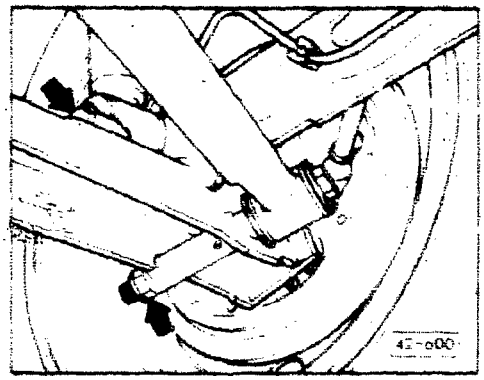

- remove bolt securing Panhard rod (**lower arrow**)
- remove bolts for suspension strut mounting at bottom (**upper arrow**)
- remove trailing link mounting bolts (two mechanics required)
- remove rear axle

Installing

Proceed in reverse order of removing and note the following:

- bleed brake system, page 47-14
- adjust parking brake, page 46-18

Suspension strut, removing

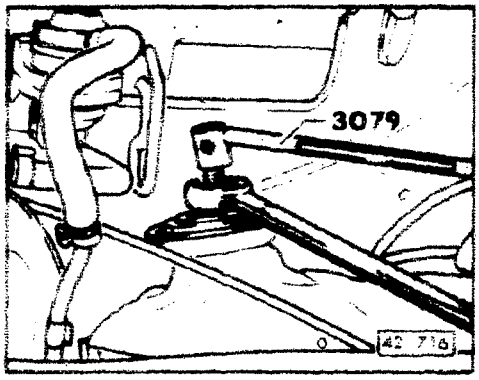

Work sequence

Note

The suspension struts may only be removed one side at a time. Otherwise the brake hoses will be stretched and damaged.

(Vehicle standing on wheels)

- remove luggage compartment trim
- remove cover plate
- unscrew nut from piston rod (hold rod up with special tool 3079)

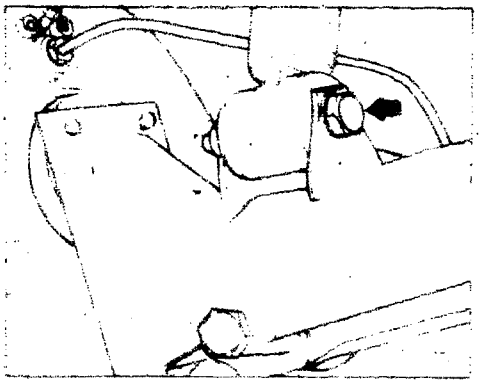

- raise vehicle
- remove lower bolt (**arrow**)

cardiagn.com

Rear Wheel Suspension – Shafts & Axle

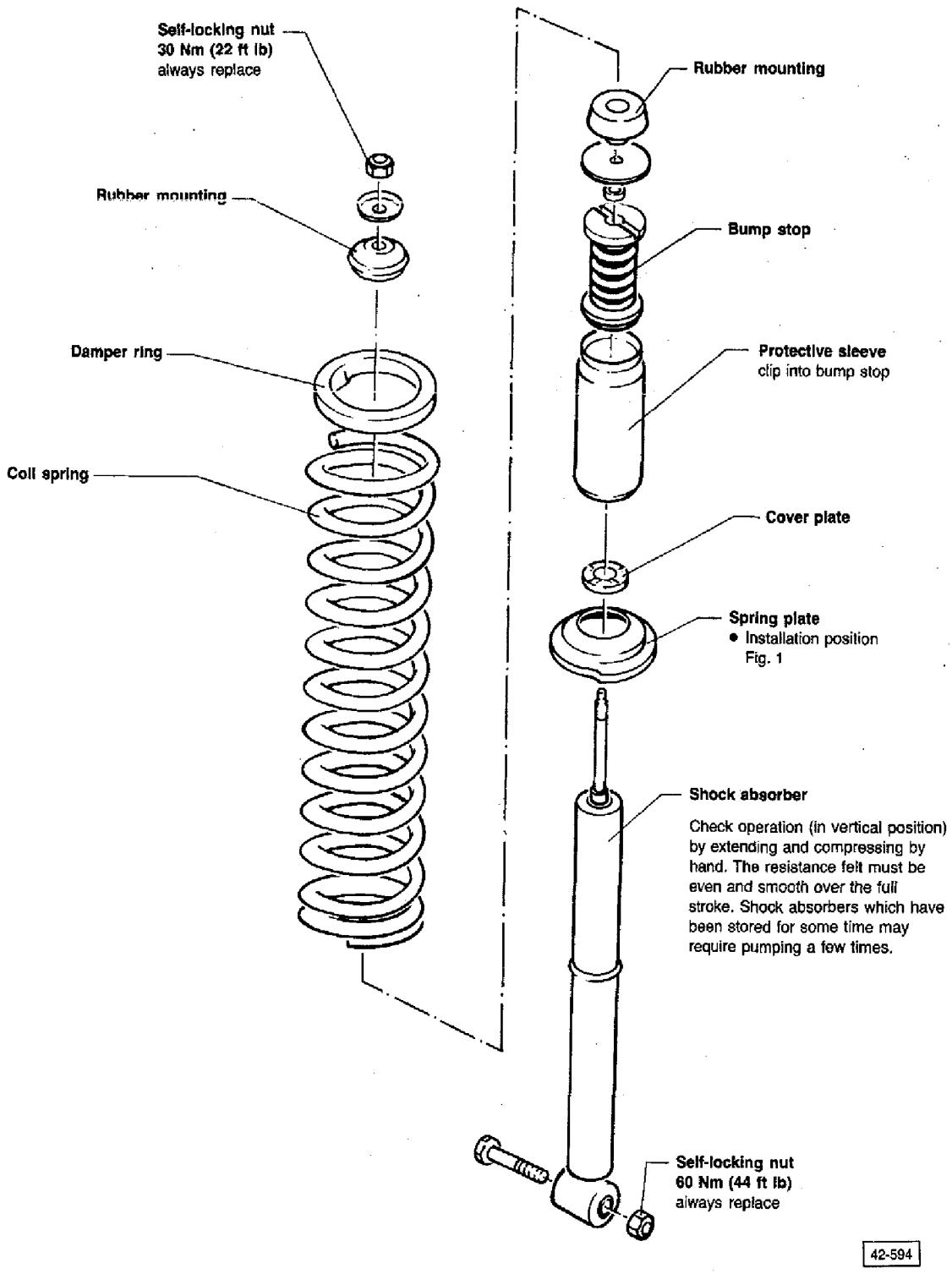

cardiagn.com

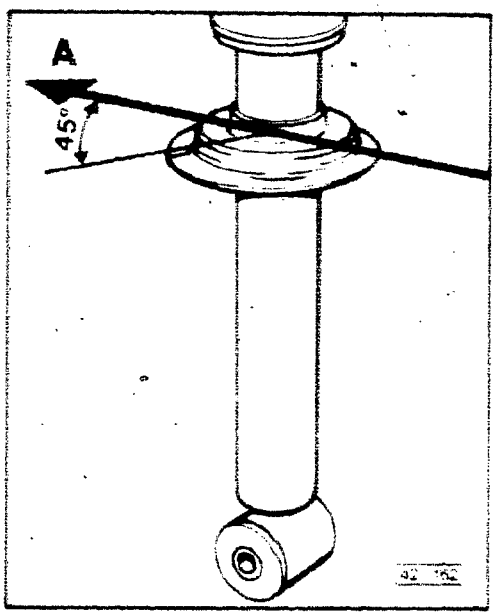

▶ **Fig. 1 Installation position of spring plate**

The notch on the spring plate points 45° to the left, as seen in direction of vehicle travel (**A**).

Rear shock absorber noise

Use the following procedure to eliminate noise (squeaking, creaking) from the rear suspension when driving over bumps or during braking:

- raise rear of vehicle
- remove lower shock absorber bolt
- separate shock absorber from axle support bracket

> **CAUTION**
>
> Do not allow rear axle to hang from body mounts only, as brake lines could be damaged

- apply silicone grease to both sides of lower shock absorber bushings (**arrows**)
- install shock absorber to lower bracket using new lock nut. Do not tighten nut
- repeat procedure on opposite side of vehicle
- lower rear of vehicle to ground
- torque lower rear shock absorber nuts to 90 Nm (66 ft lb)

cardiagn.com

Index

index continues on next row down

Quattro – all wheel drive

Ball joint
- replacing 42.13

Control arm bushings
- pressing out/in 42.11

CV joints
- assembly 42.31
- removing/installing 42.32

Rear suspension
- assembly 42.10

Subframe bushings
- front, pressing out/in 42.13
- rear, pressing out/in 42.12

Suspension strut with separate wheel bearing housing

Coil spring
- assembly 42.17
- compressing 42.18
- removing/installing 42.18

Protective ring
- installing 42.23

Shock absorber
- assembly 42.17
- removing/installing 42.18

Suspension strut
- assembly 42.17, 42.29

Wheel bearing
- assembly 42.21
- pressing out/in 42.22

Wheel hub
- assembly 42.21
- pressing in 42.23
- pressing out 42.22

Suspension strut with attached wheel bearing housing

Axle shaft
- assembly 42.24
- removing/installing 42.25

Ball joint
- removing/installing 42.20

Coil spring
- assembly 42.16
- compressing 42.18
- removing/installing 42.18

Shock absorber
- assembly 42.16
- removing/installing 42.18
- tightening upper nut 42.20

Suspension
- revisions for 1990 m.y. 42.10a

Suspension strut
- assembly 42.16, 42.24

Wheel bearing
- assembly 42.16
- removing/installing 42.19

Wheel hub
- assembly 42.16
- pressing out/in 42.19

cardiagn.com

CAUTION

Do not attempt to weld or straighten the suspension strut wheel bearing housing control arm or subframe

Note

Suspension revisions for 1990 MY, see page 42.10a.

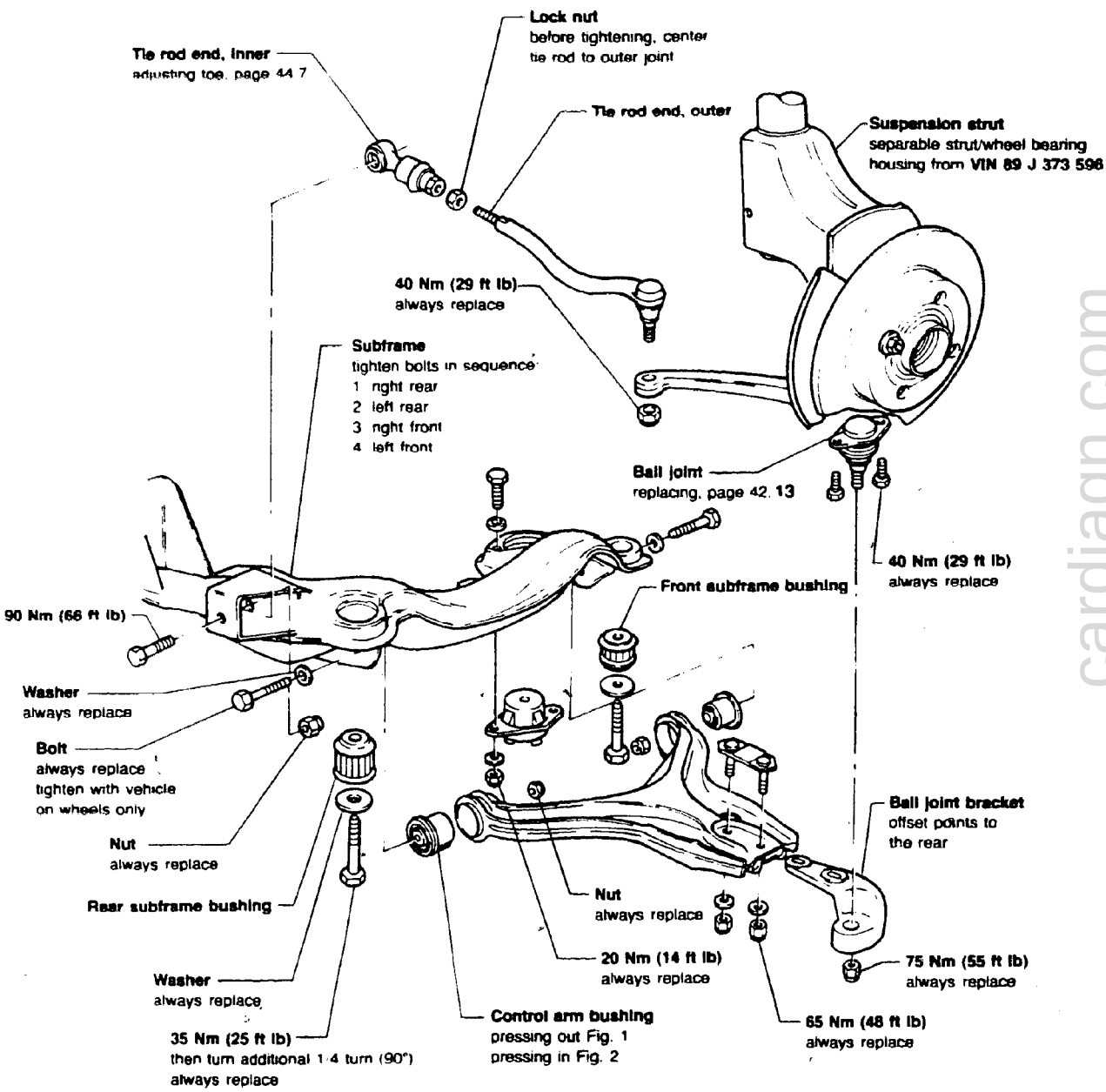

E-2

cardiagn.com

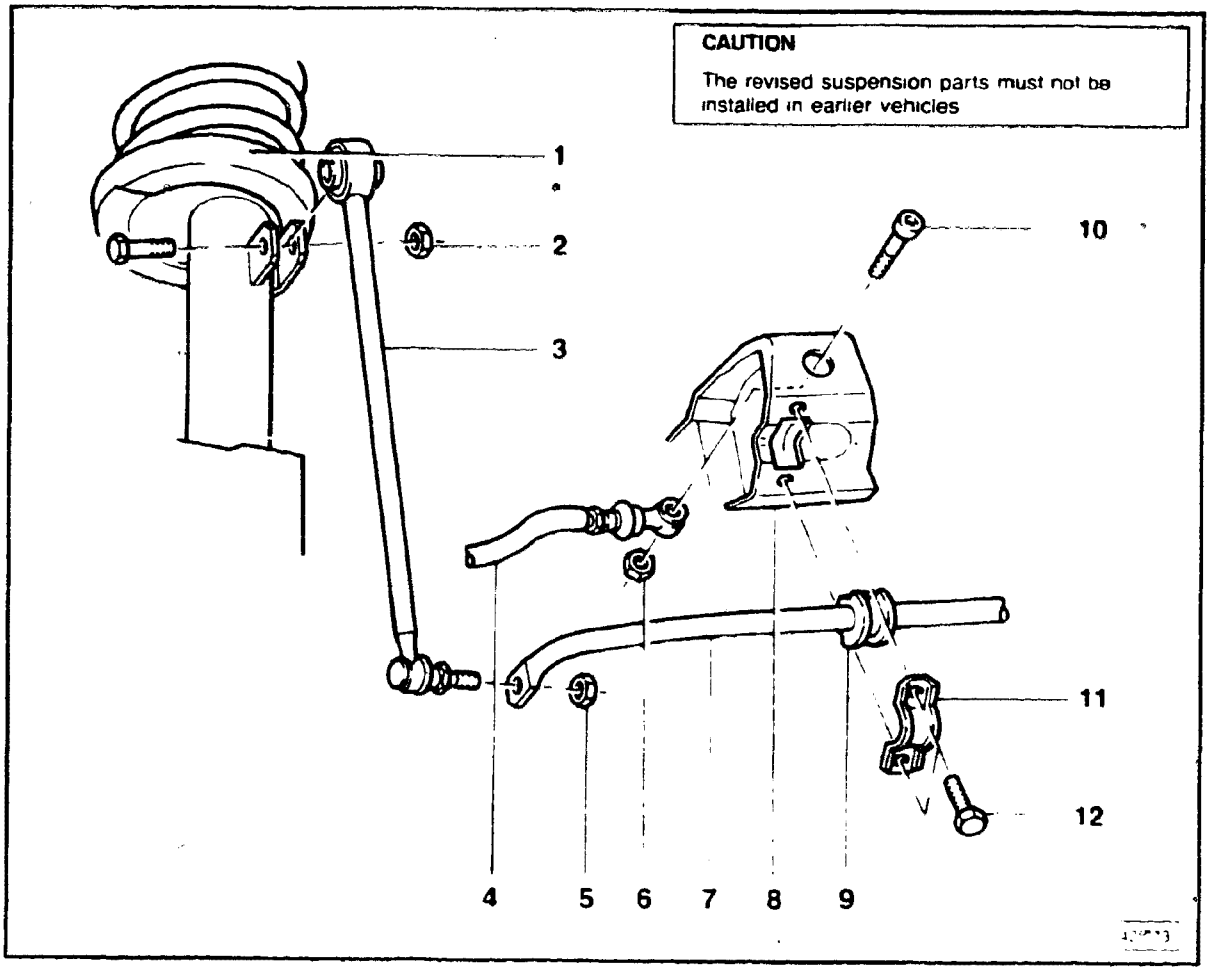

1 — **Shock absorber wheel bearing housing**
with tab for mounting stabilizer link rod

2 — **25 Nm (18 ft lb)**
always replace

3 — **Link rod**

4 — **Tie rod**
length changed from previous version

5 — **45 Nm (33 ft lb)**
always replace

6 — **Self-locking nut**
always replace

7 — **Stabilizer bar**

8 — **Subframe**
bracket for tie rod stabilizer revised

9 — **Rubber bushing**

10 — **90 Nm (66 ft lb)**
tighten only with vehicle on ground

11 — **Clamp**

12 — **35 Nm (26 ft lb)**

cardiagn.com

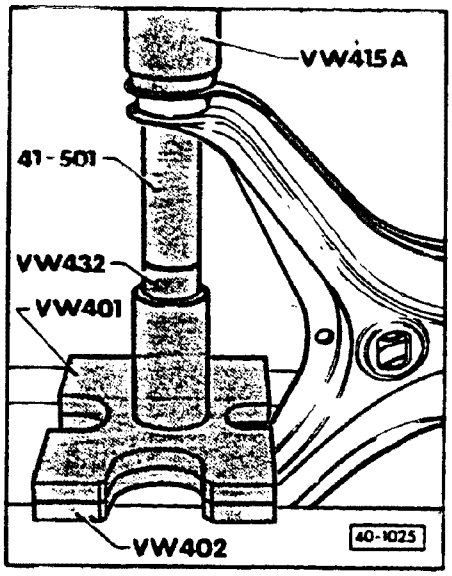

▶ Fig. 1 Control arm bushing, pressing out

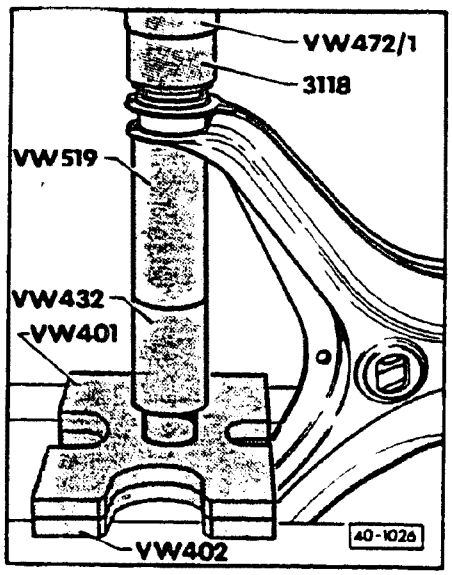

▶ Fig. 2 Control arm bushing, pressing in

- press in bushing up to stop

cardiagn.com

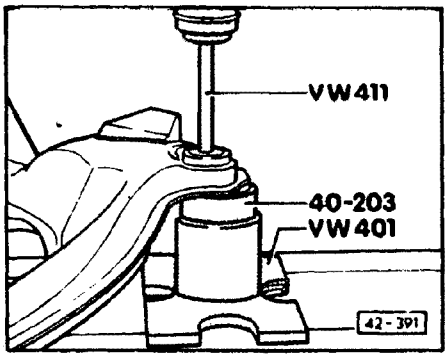

▶ Fig. 3 Rear subframe bushing, pressing out

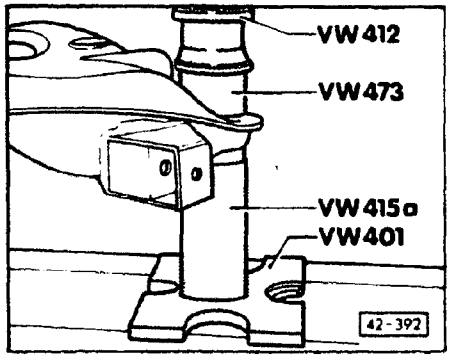

▶ Fig. 4 Rear subframe bushing, pressing in

- apply acid-free lubricant before installing

cardiagn.com

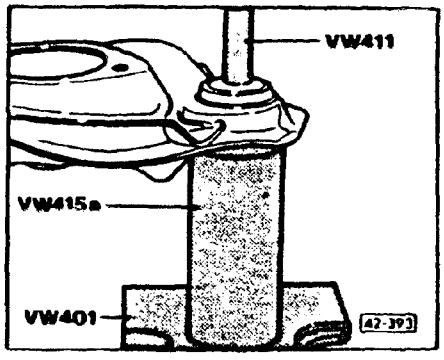

▶ **Fig. 5 Front subframe bushing, pressing out**

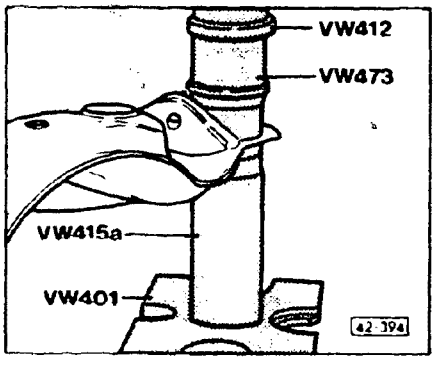

▶ **Fig. 6 Front subframe bushing, pressing in**

- apply acid-free lubricant before installing

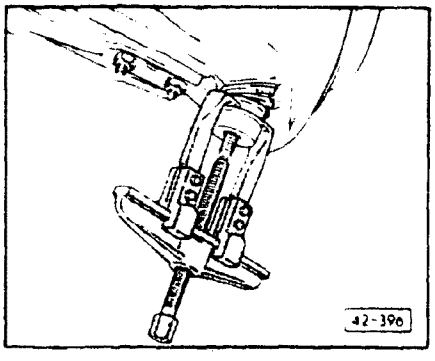

Ball joint, replacing

▶

- remove wheel
- remove nut from ball joint
- press ball joint out of joint carrier

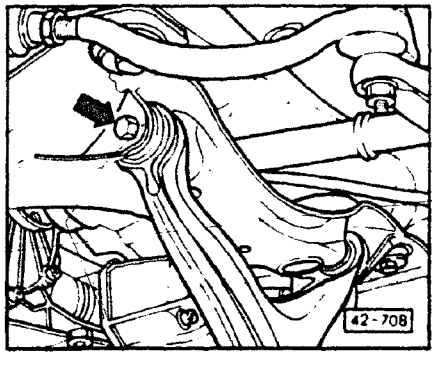

▶

- loosen control arm mounting bolts at subframe (**arrow**)
- swing control arm downward

cardiagn.com

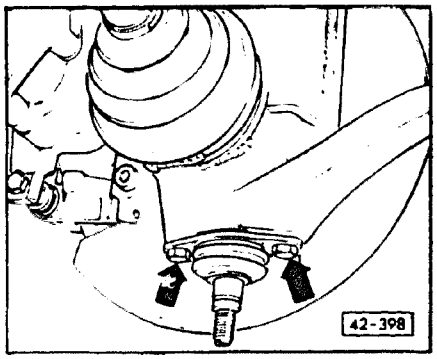

- remove bolts from wheel bearing housing (**arrows**)

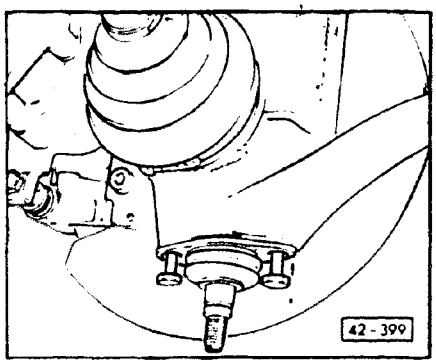

- insert two bolts, M 8 x 40mm, into wheel bearing housing about 25mm (approx. 1 in.)

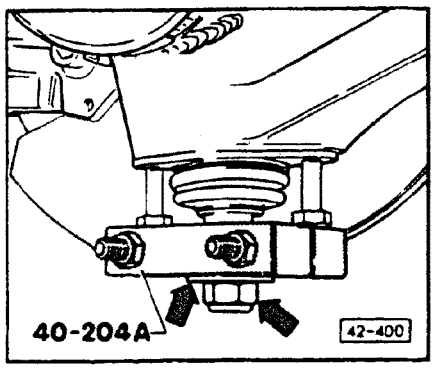

- push preassembled tool **40-204A** over ball joint
- attach joint mounting nut (**right arrow**) with large washer (**left arrow**) onto joint and tighten as far as possible

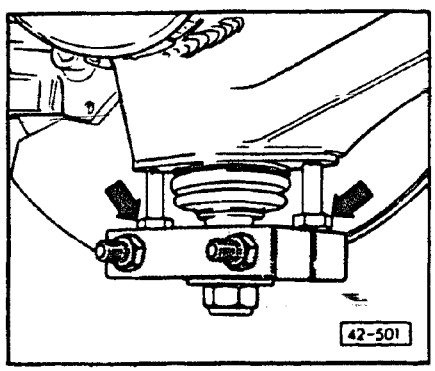

- turn out installed bolts (**arrows**) alternately to remove ball joint

cardiagn.com

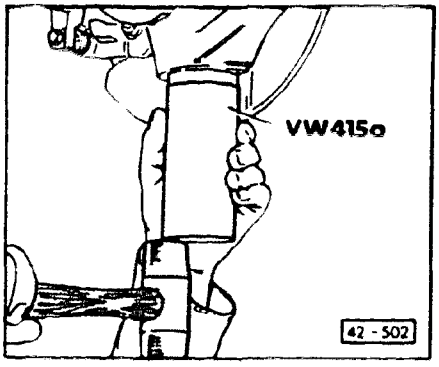

Note

Before driving ball joint in, align holes in joint to holes in wheel bearing housing.

- drive ball joint into wheel bearing housing until seated
- tighten ball joint bolts to 40 Nm (29 ft lb)
- swivel control arm into place and tighten ball joint nut to 75 Nm (55 ft lb)
- tighten control arm mountings with vehicle on wheels

cardiagn.com

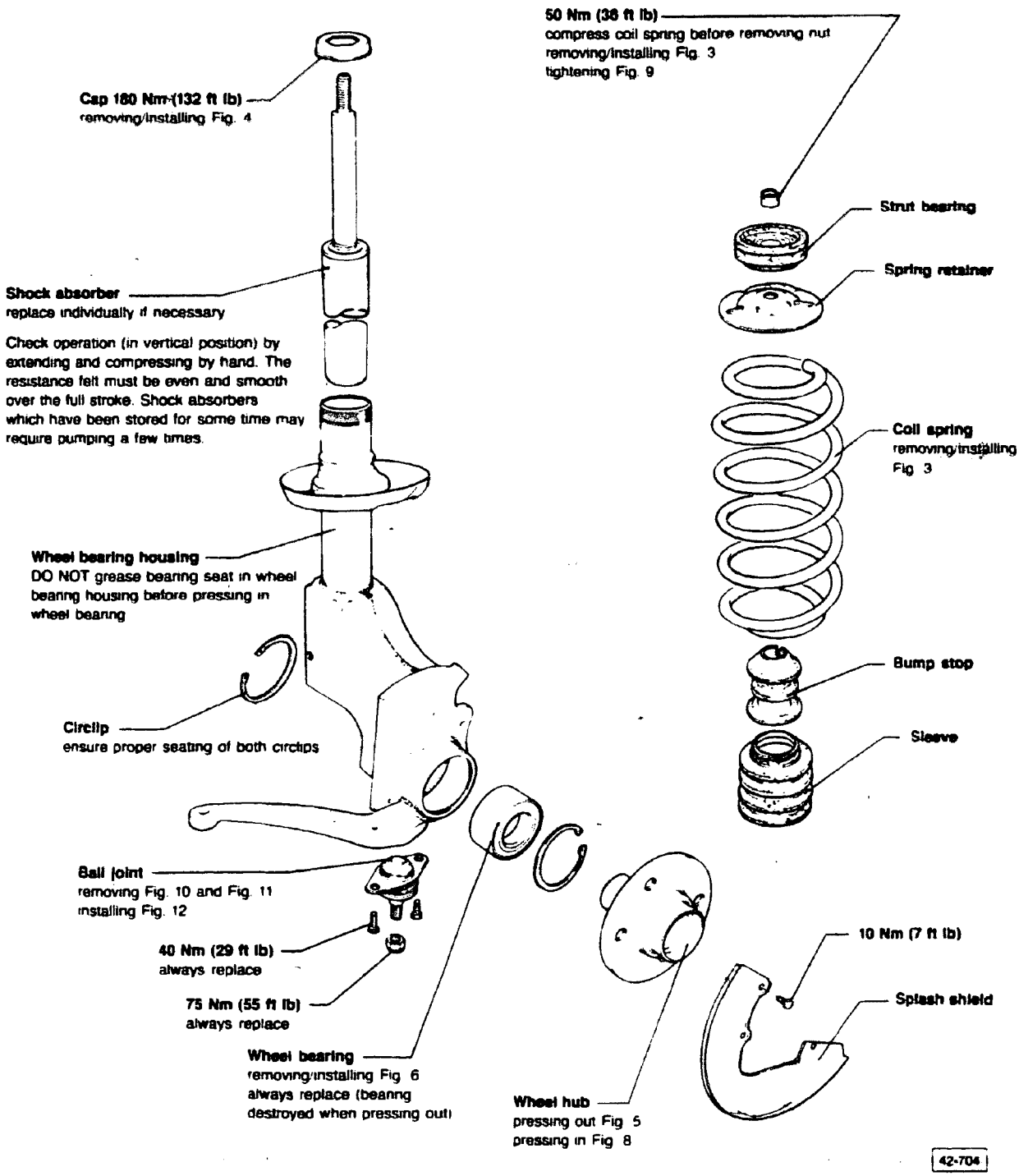

cardiagn.com

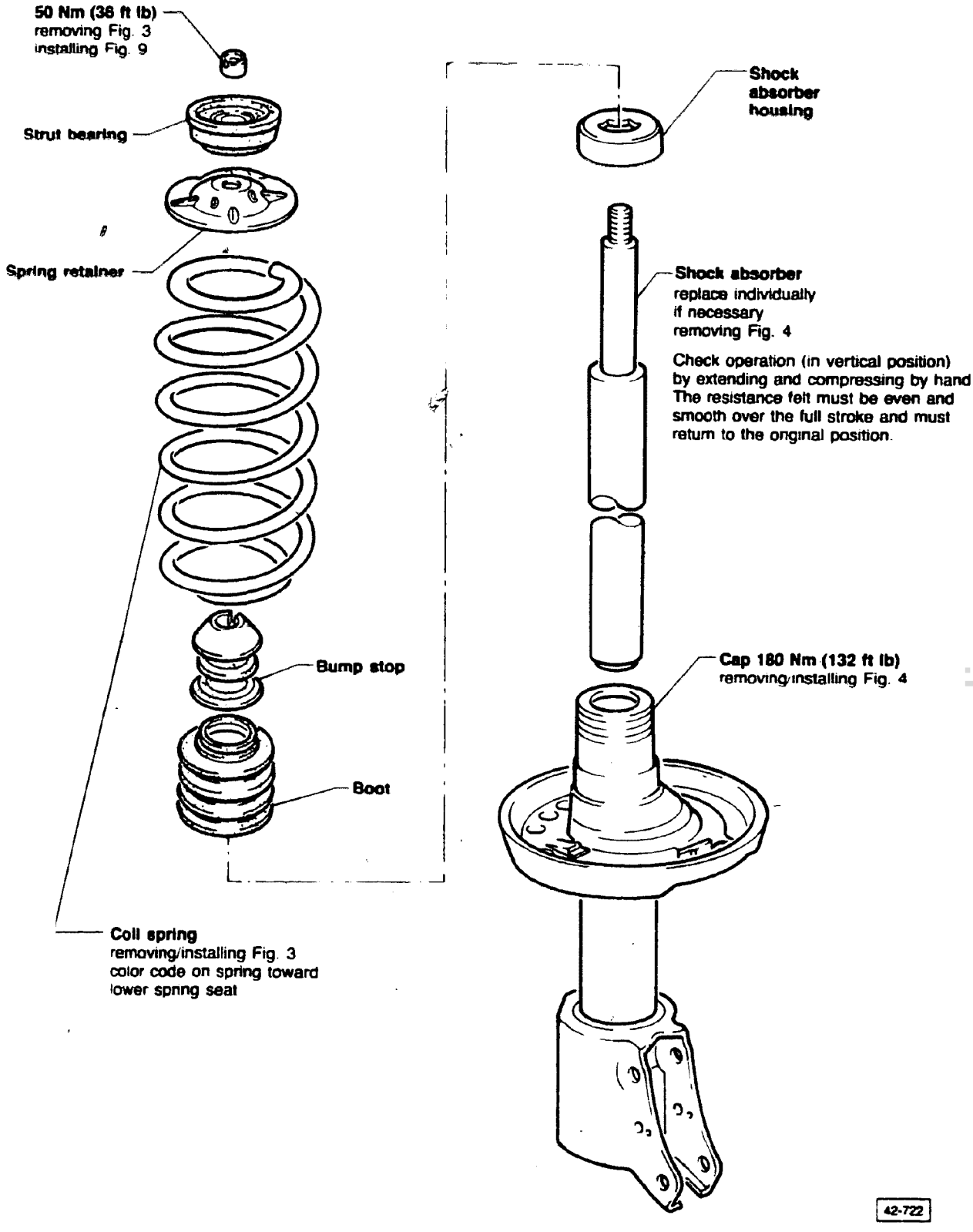

cardiagn.com

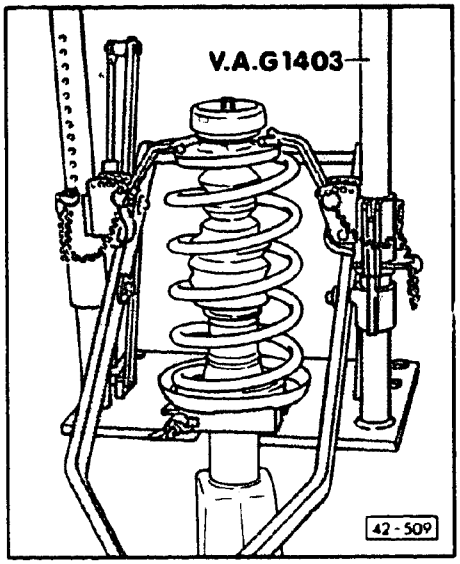

▶ **Fig. 1 Coil spring, compressing**

- use tool **VW340** (not shown) with **VW340/5**
- modify tool **VW340/5** as shown in Fig. 2

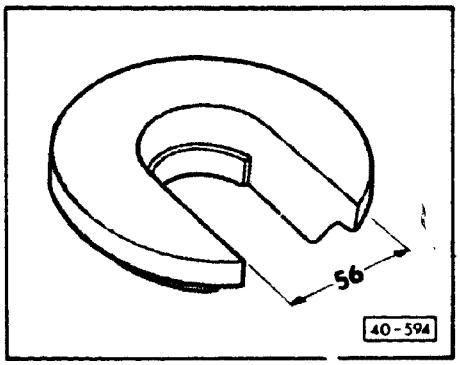

▶ **Fig. 2 Coil spring, compressing**

- modify tool **340/5**
  a = 56mm (2-3/16 in.)

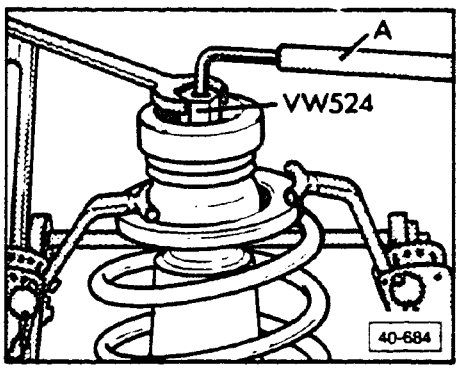

▶ **Fig. 3 Coil spring, removing/installing**

- hold shock absorber shaft with wrench **A**
- remove slotted nut
- remove strut bearing and spring retainer
- remove spring compressor and spring

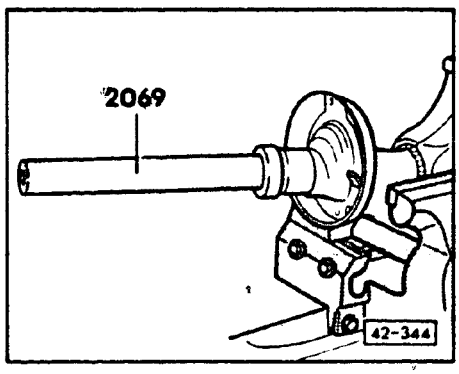

▶ **Fig. 4 Shock absorber, removing/installing**

cardiagn.com

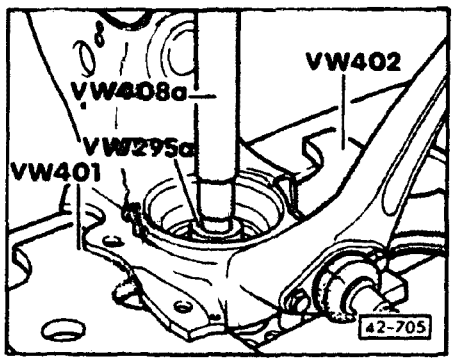

▶ **Fig. 5 Wheel hub, pressing out**

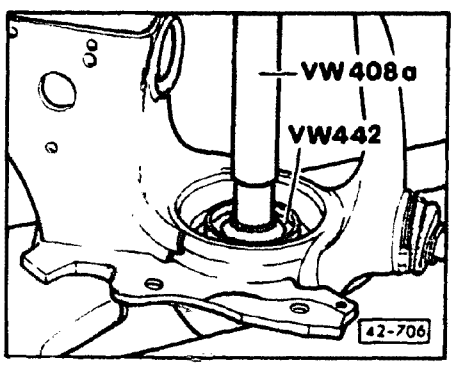

▶ **Fig. 6 Wheel bearing, removing/installing**

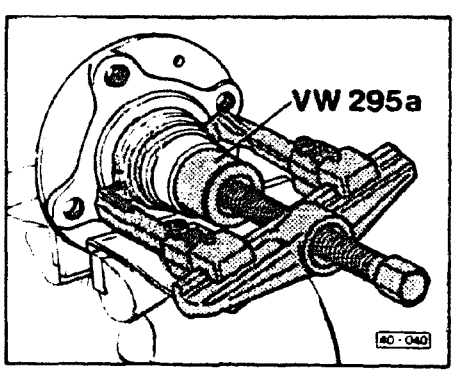

▶ **Fig. 7 Wheel bearing inner race, removing**

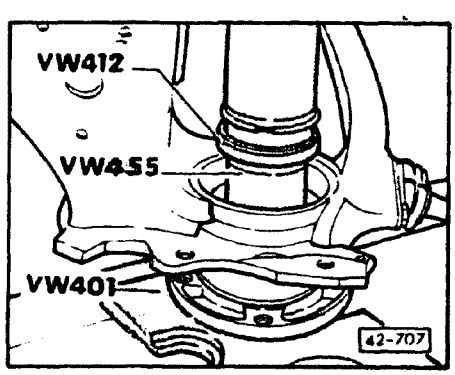

▶ **Fig. 8 Wheel hub, pressing in**

- tool **VW 455** must only contact the inner race

cardiagn.com

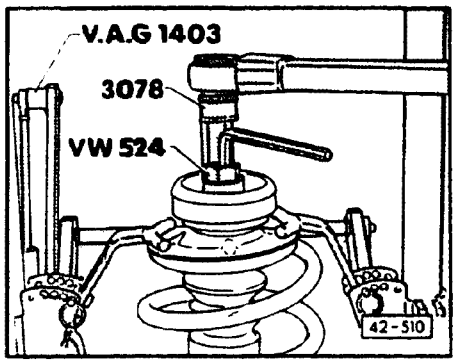

▶ **Fig. 9 Upper shock absorber nut, tightening**

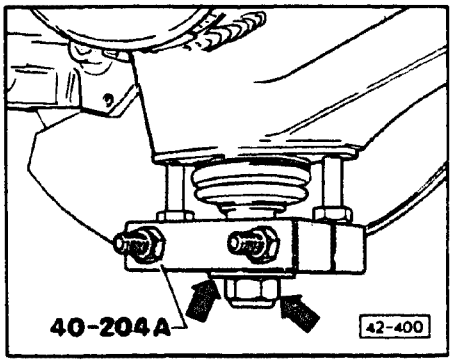

▶ **Fig. 10 Ball joint, removing**

- install two bolts, M 8 x 40, approximately 25mm (1 in.) into wheel bearing housing
- place preassembled tool **40-204A** over ball joint
- thread ball joint mounting nut (**lower arrow**) onto ball joint along with large washer (**upper arrow**) and tighten as far as possible

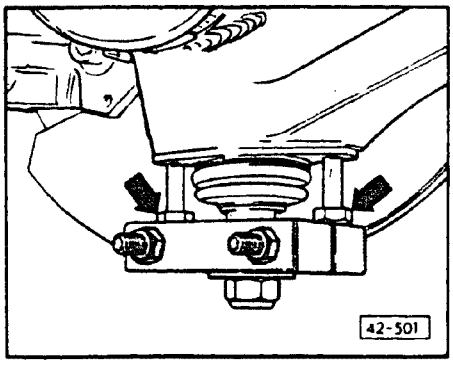

▶ **Fig. 11 Ball joint, removing**

- pull ball joint out by turning installed bolts (**arrows**) out alternately

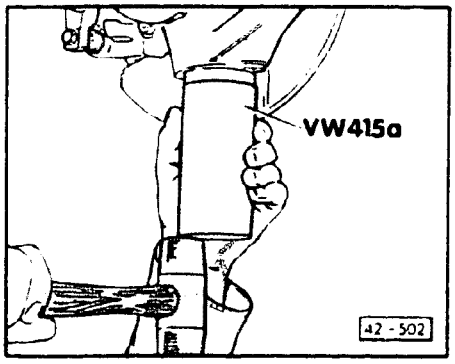

▶ **Fig. 12 Ball joint, installing**

Note

Before driving ball joint into place, align holes in ball joint with holes in wheel bearing housing.

- drive ball joint into wheel bearing housing until seated

cardiagn.com

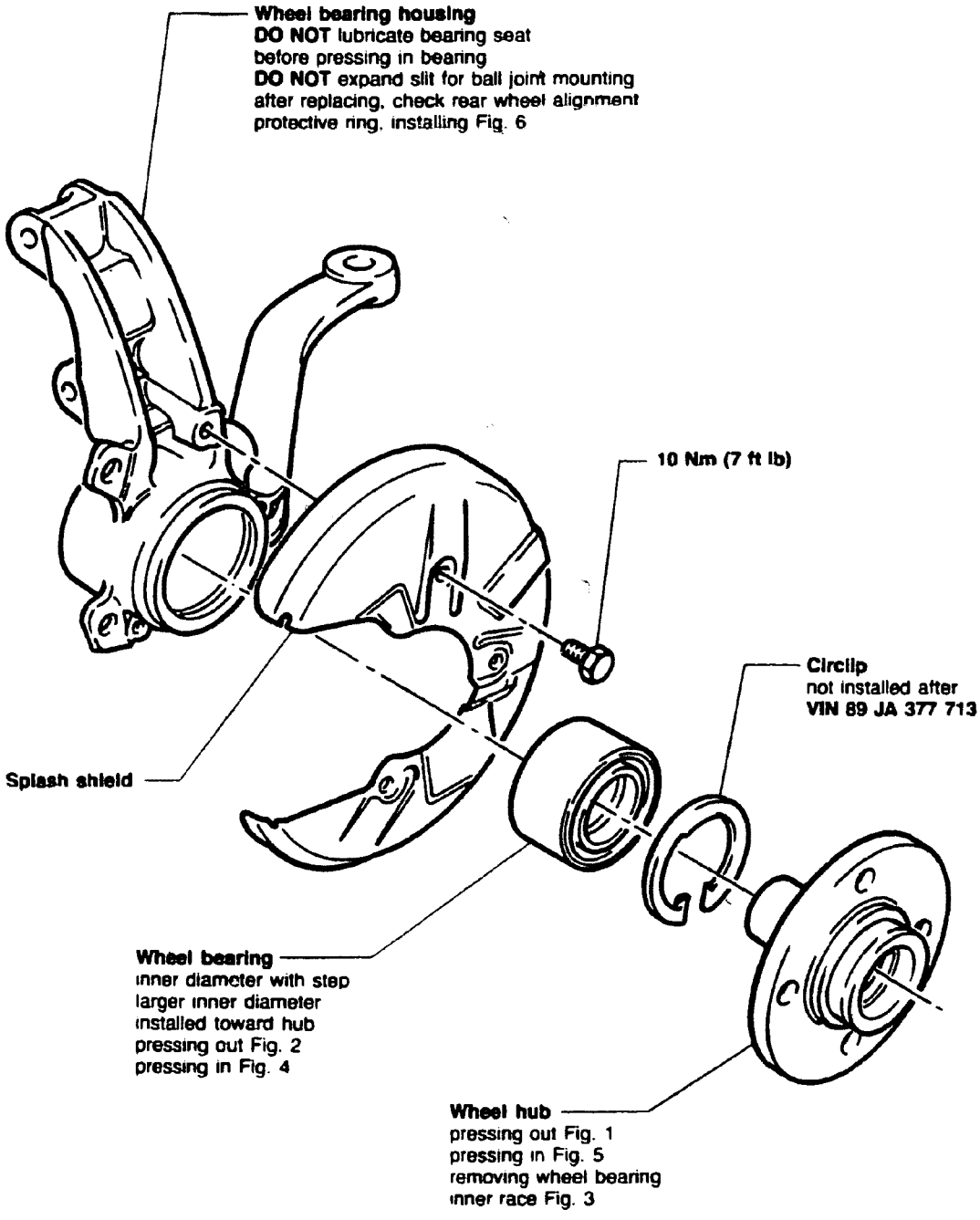

cardiagn.com

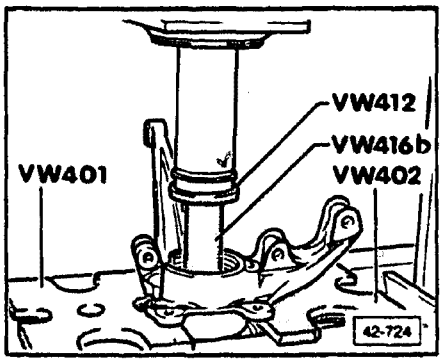

▶ **Fig. 1 Wheel hub, pressing out**

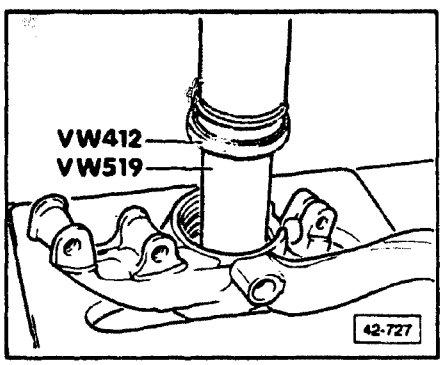

▶ **Fig. 2 Wheel bearing , pressing out**

- first remove circlip

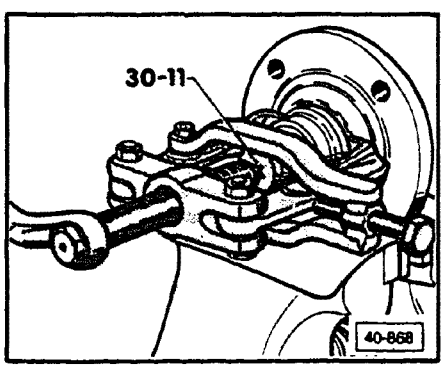

▶ **Fig. 3 Wheel bearing inner race, removing**

- use puller with clamp, e.g. **Kukko 204-1**

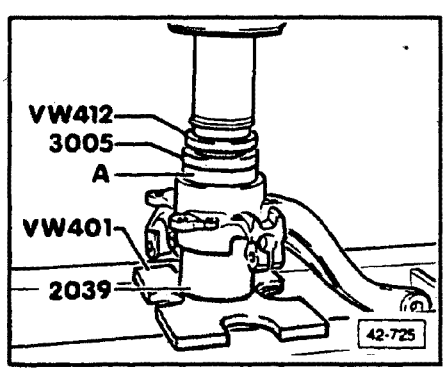

▶ **Fig. 4 Wheel bearing, pressing in**

- press bearing **A** in to stop
  - larger inner diameter installed toward wheel hub

E-15

cardiagn.com

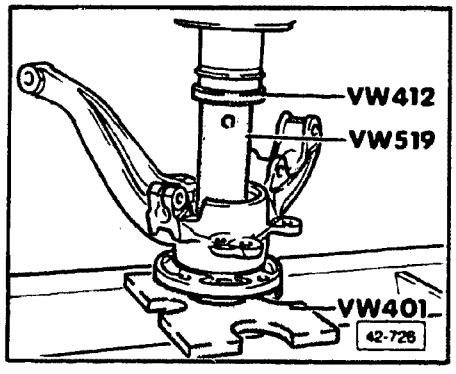

Fig. 5 Wheel hub, pressing in

- Tool **VW 519** is supported on the wheel bearing inner race only

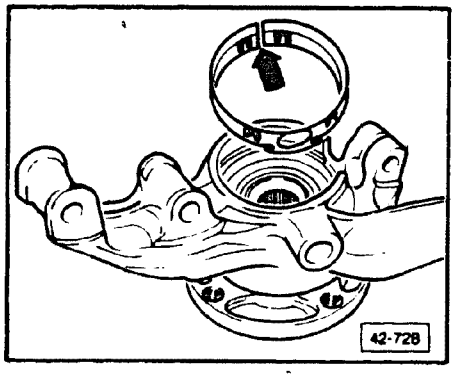

Fig. 6 Protective ring, installing in wheel bearing housing

- coat housing bore with oil before installing
- push ring in by hand until lock tabs engage
  - ring must not overlap (**arrow**)

Note

Vehicles not equipped with the protective ring in production cannot have it installed later.

cardiagn.com

CAUTION

Do not move vehicle without axle shaft or outer CV-joint installed.

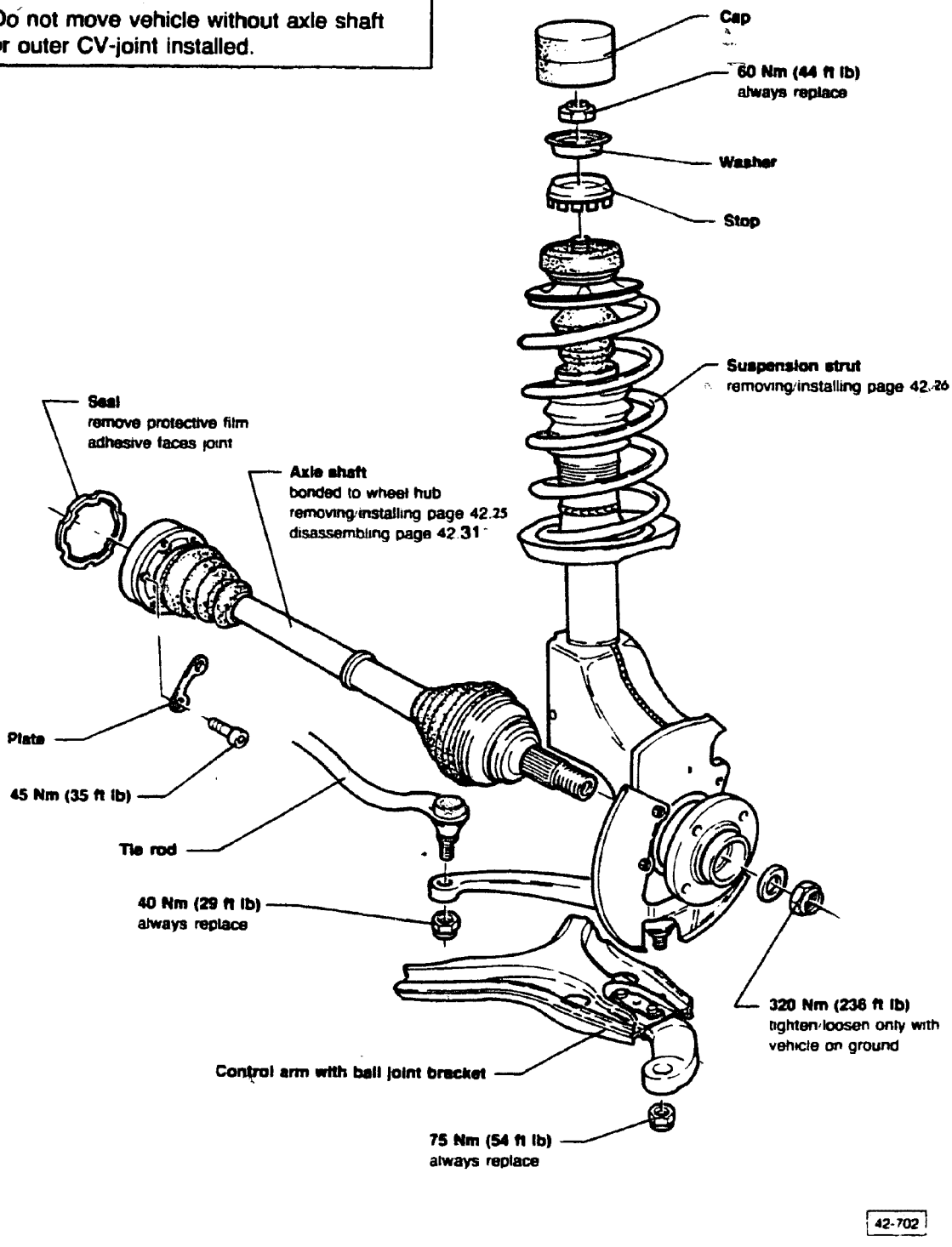

cardiagn.com

Axle shaft, removing/installing

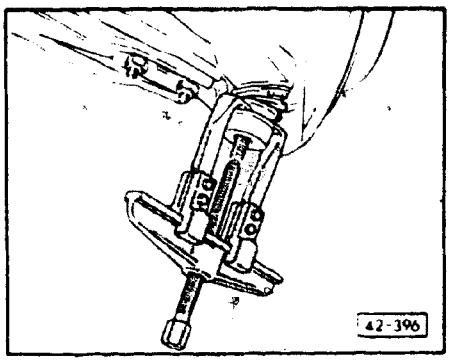

Removing

- remove axle nut, wheel bolts and wheel
- remove axle shaft at differential flange
- press ball joint out of bracket

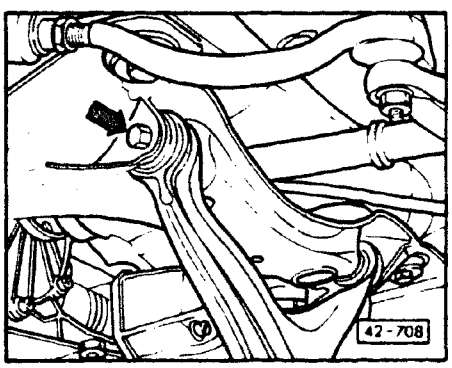

- loosen control arm mounting bolts at subframe (**arrow**)
- swing control arm downwards

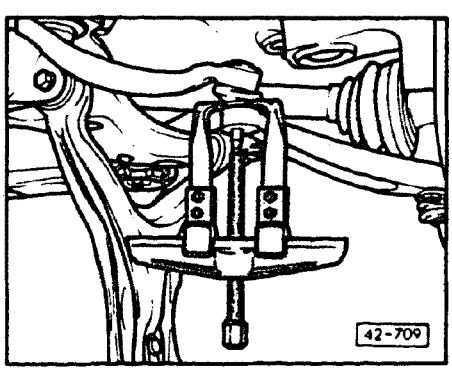

- remove tie rod
- install nut onto tie rod joint by hand. so threads of tie rod are not damaged

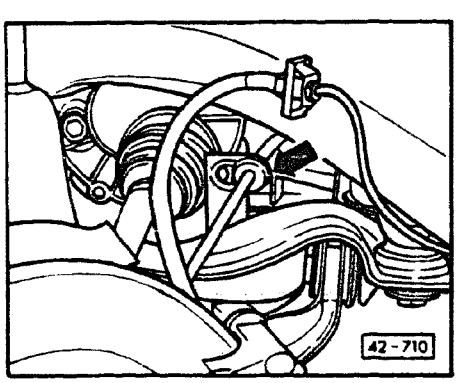

- remove parking brake cable grommet from bracket (**arrow**)

cardiagn.com

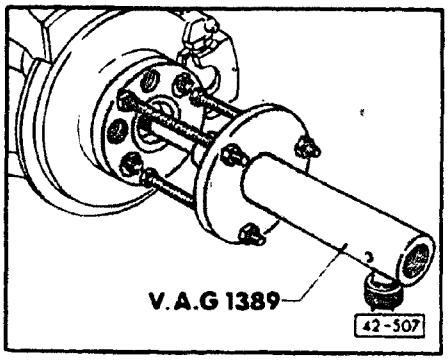

- press axle shaft out of hub
- angle axle shaft alongside differential and remove

CAUTION

Always remove stub axle with mechanical or hydraulic hub puller only. DO NOT heat up wheel bearing housing or wheel bearing will be damaged.

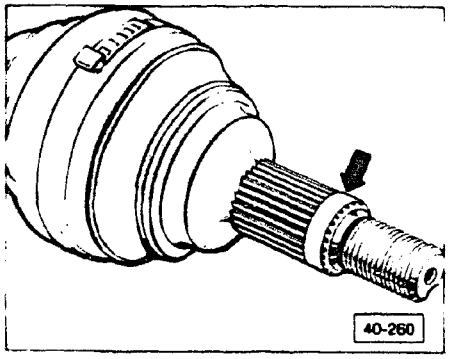

Installing

CAUTION

Splines on stub axle and wheel hub must be free of oil, grease and old locking compound.

- apply locking compound **D6** around splines in a bead (**arrow**) not more than 5.0 mm (1/4 in.) wide

Note

Allow locking compound **D6** at least one hour hardening time before driving vehicle.

Suspension strut, removing/installing

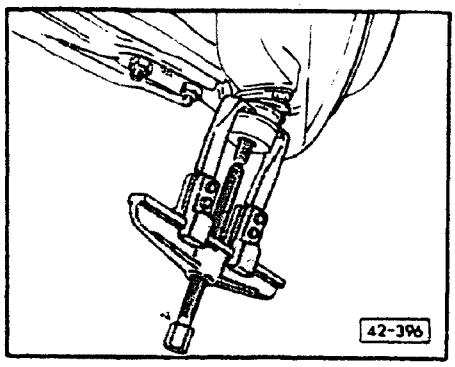

Removing

- remove axle nut, wheel bolts and wheel
- remove axle shaft flange at differential
- press ball joint out of bracket

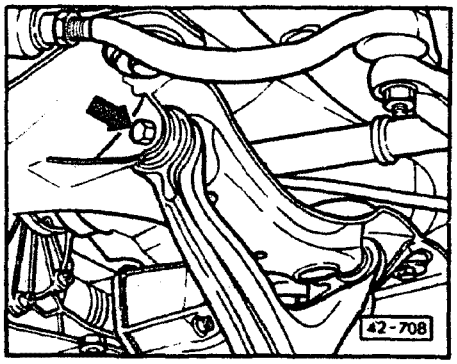

- loosen control arm mounting bolts at subframe (**arrow**)
- swing control arm downwards

cardiagn.com

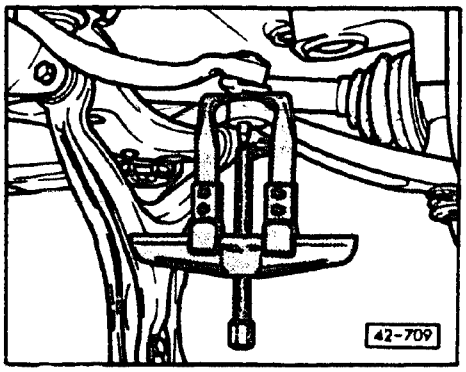

- remove tie rod
- install nut onto tie rod joint by hand, so threads of tie rod are not damaged

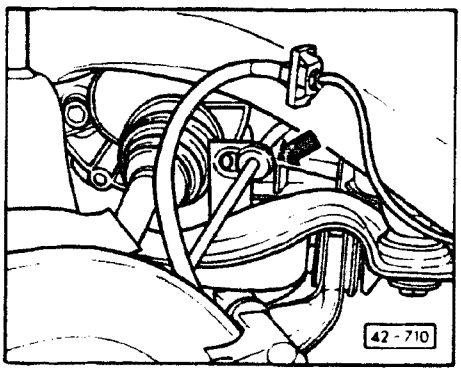

- remove parking brake cable grommet from bracket (**arrow**)

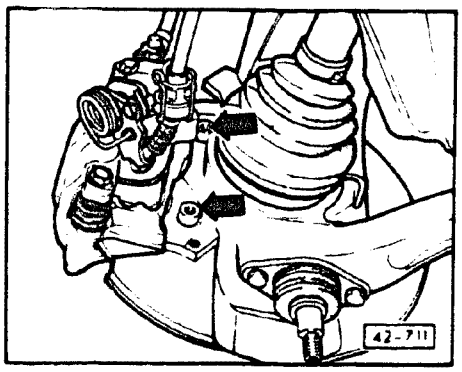

- remove bolts fastening brake caliper (**arrows**) and remove caliper
- tie caliper to body with wire (do not disconnect brake lines)
- remove brake disc

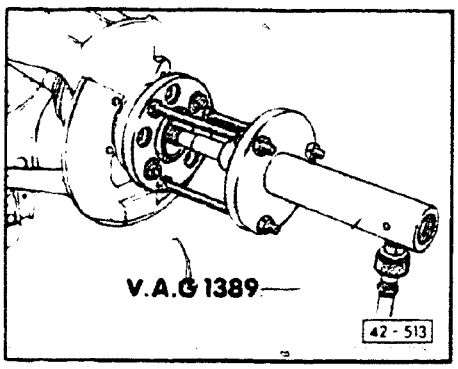

- press out stub axle from hub

CAUTION

Always remove stub axle with mechanical or hydraulic puller only. Never heat up wheel bearing housing or wheel bearing will be damaged.

cardiagn.com

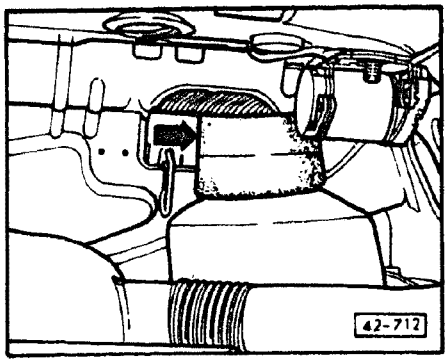

- support suspension strut from below
- remove luggage compartment trim
- remove cap at top of strut (**arrow**)

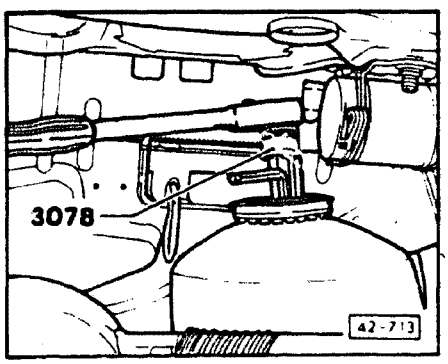

- remove nut
- remove suspension strut assembly

Installing

> **CAUTION**
>
> Splines on stub axle and wheel hub must be free of oil, grease and old locking compound.

- install suspension strut and tighten nut to 60 Nm (48 ft lb)

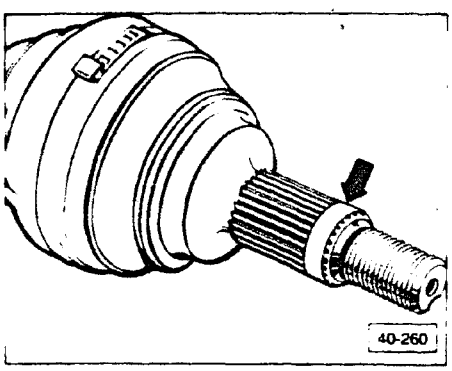

- apply locking compound **D6** in a bead approximately 5.0mm (1 4 in.) wide around splines (**arrow**)

Note

Allow locking compound **D6** approximately one hour hardening time before driving vehicle.

cardiagn.com

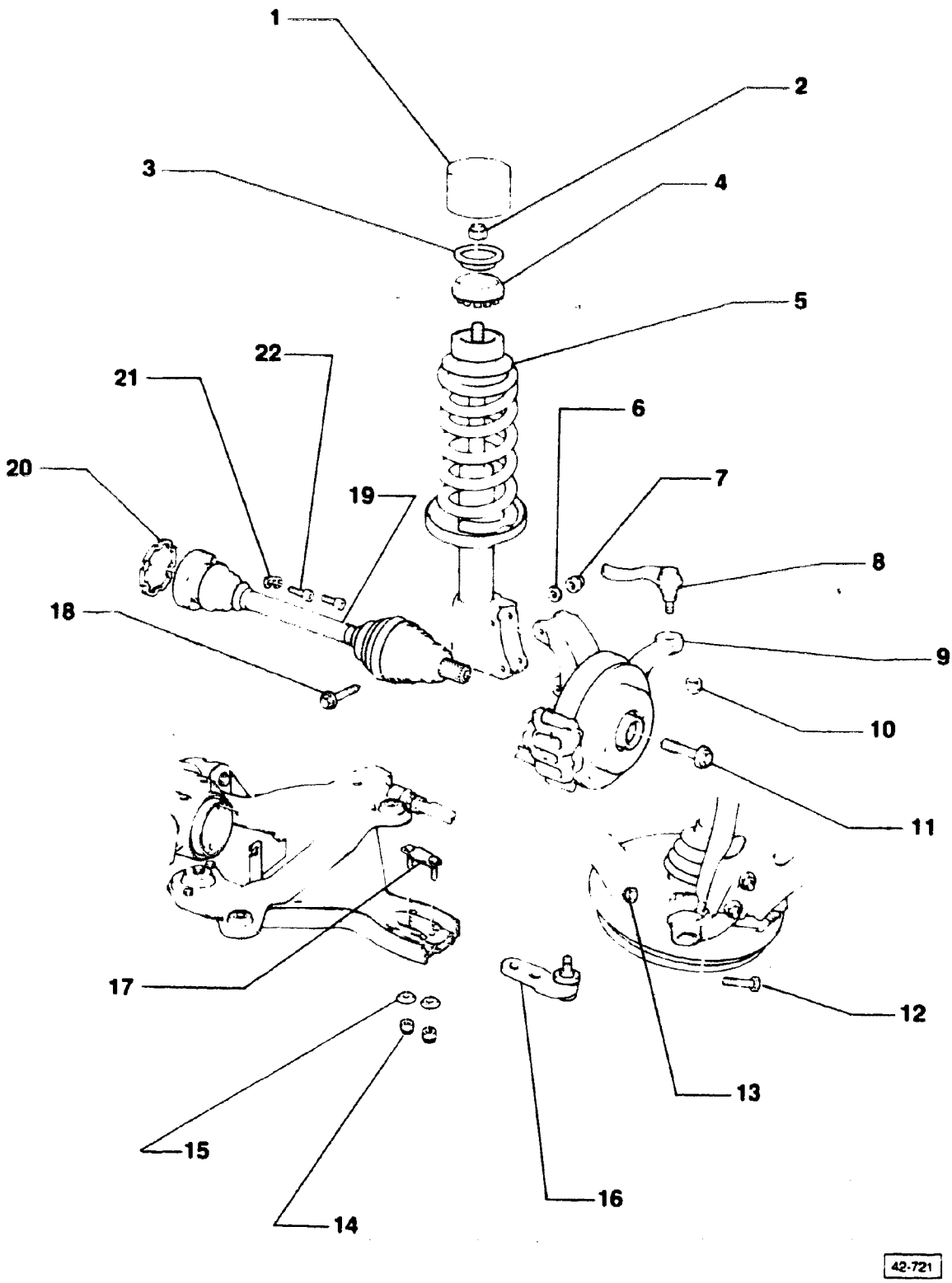

cardiagn.com

1 — Cap

2 — 60 Nm (44 ft lb)
always replace

3 — Stop

4 — Stop ring
coat with talcum powder and insert in stop

5 — Suspension strut
when removing: support strut by placing a wooden block between axle shaft and mount remove nut from piston rod with special tool **3078**

when installing: bolt strut to wheel bearing housing and install wheel, lower vehicle until wooden block can be removed after installation check rear wheel alignment

6 — Washer

7 — 80 Nm (59 ft lb)
plus **additional 1/2 turn (180°)**
ALWAYS replace with new version

8 — Tie rod
press off with two-armed puller tightening torque to subframe mount: **90 Nm (66 ft lb)**

9 — Wheel bearing housing
after replacing or loosening of mounting bolts, check rear wheel alignment

10 — 40 Nm (30 ft lb)
always replace

11 — Bolt/washer assembly
120 Nm (89 ft lb) plus 1 4 turn (90°) always replace
loosen and tighten only with vehicle on ground

12 — Bolt
always replace
bolt head points in drive direction

13 — 65 Nm (48 ft lb)
always replace

14 — 65 Nm (48 ft lb)
always replace

15 — Washer

16 — Ball joint
different part for right and left sides
offset points to rear

17 — Locking plate

18 — Bolt
ALWAYS replace with new version

19 — Axle shaft
repairing, page 42.31
to remove: pull ABS sensor out of wheel bearing housing slightly, remove bolt/washer assembly, remove control arm mounting bolts and pull control arm down

When installing: always replace control arm to differential mounting bolts and torque to **65 Nm (48 ft lb)**

20 — Seal
remove protective film
adhesive faces CV joint

21 — Plate washer

22 — 45 Nm (33 ft lb)

cardiagn.com

CONTINUED IN THE

BEGINNING OF NEXT ROW

cardiagn.com

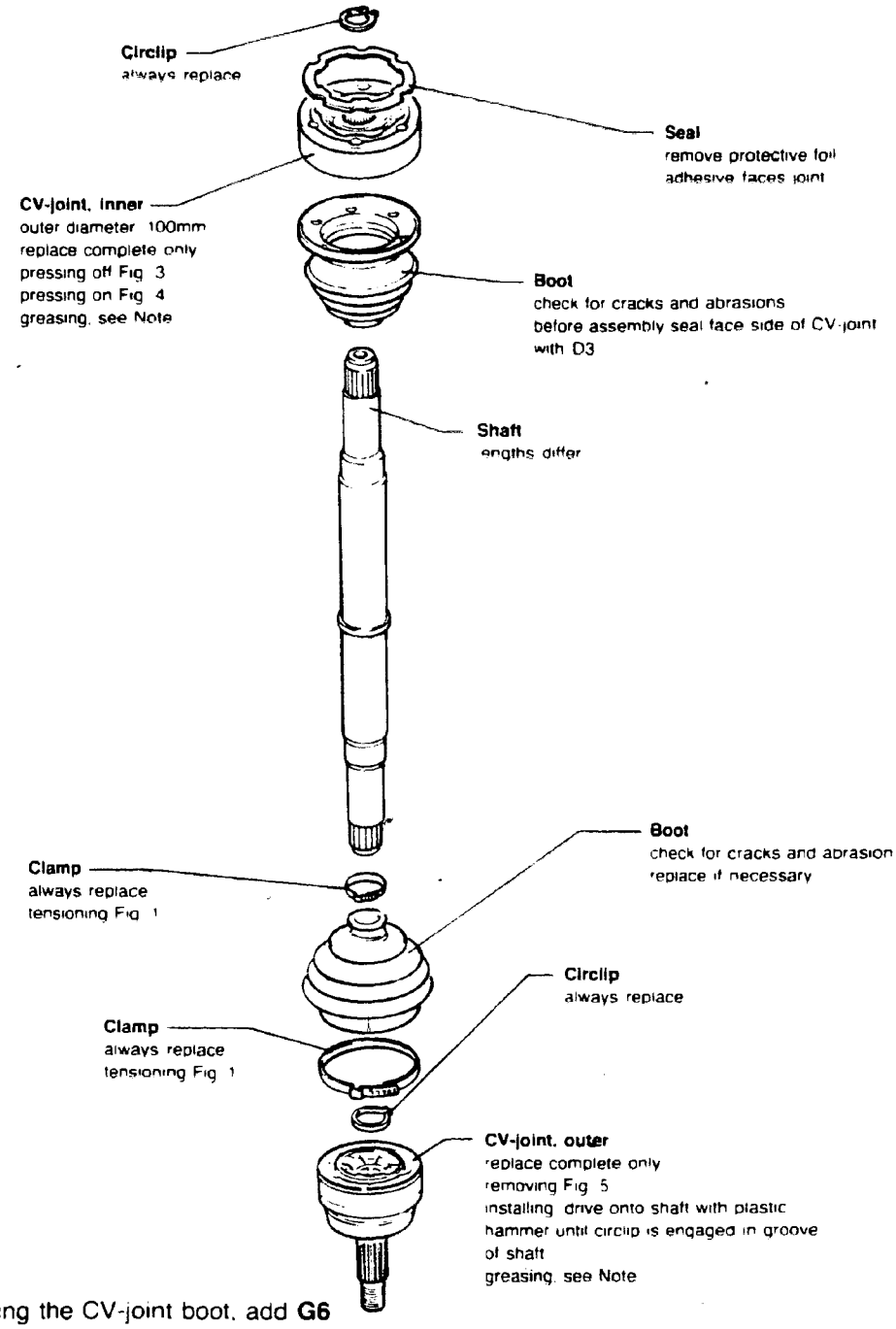

Note

When replacing the CV-joint boot, add **G6** grease. The total amount of grease for each CV-joint is 90 grams.

42-703

cardiagn.com

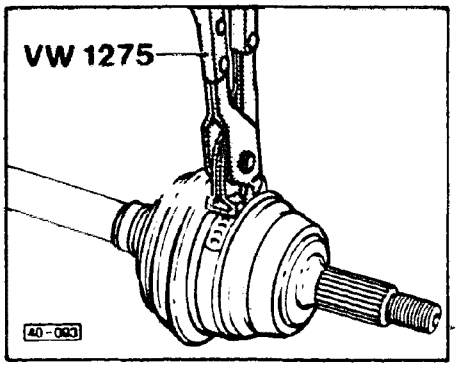

▶ **Fig. 1 Clamp, tensioning**

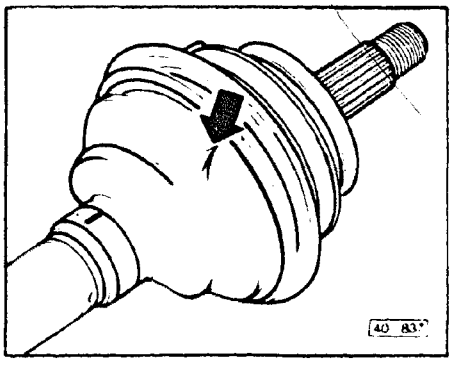

▶ **Fig. 2 Boot, ventilating**

Note

Boots are often pressed in when being installed. This causes a vacuum inside the boot, which in turn causes an inward fold (**arrow**) when the vehicle is driven.

- lift small diameter end of boot slightly after installing, so pressure can equalize and boot will regain normal shape

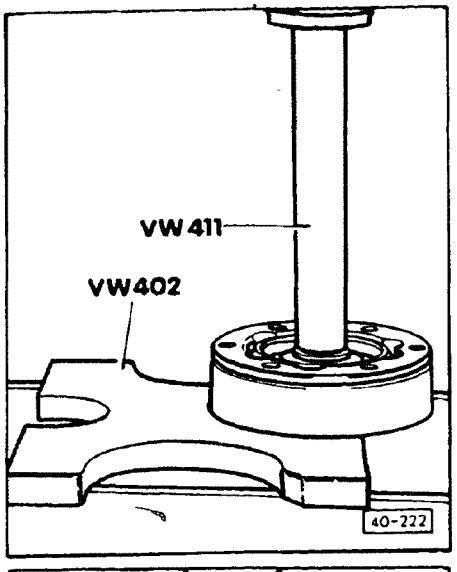

▶ **Fig. 3 CV-joint, inner, pressing off**

- support ball hub

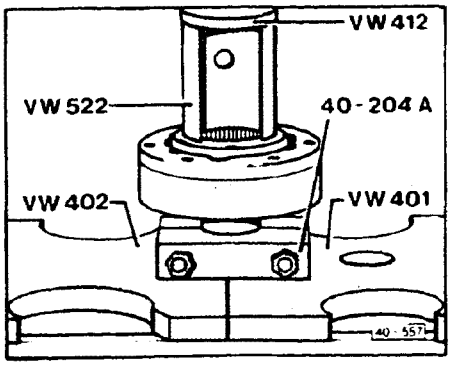

▶ **Fig. 4 CV-joint circlip, installing**

- press joint onto shafts until circlip can be pressed into groove

CAUTION

Chamfer on inside diameter of ball hub (splines) must face contact shoulder on drive shaft.

cardiagn.com

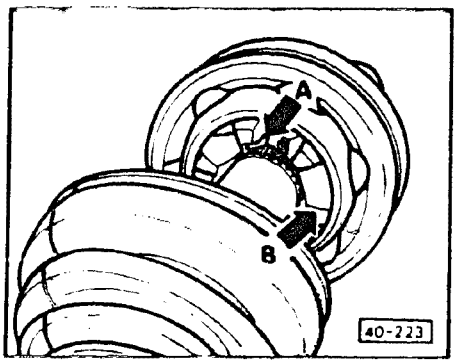

▶ **Fig. 5 CV-joint, outer, removing**

- spread circlip (**arrow A**)
- drive joint off shaft by tapping lightly with copper drift against hub **B**

cardiagn.com

Index

Hub cap
- removing **44.6**

Wheel alignment data
- front camber, adjusting (2-point ball joint) **44.11**
- front camber, adjusting (3-point ball joint) **44.12**
- front toe, adjusting **44.14**
- 2-wheel drive **44.8**
- Quattro (130 hp) **44.9**
- ★ Quattro (162 hp) **44.10**
- rear camber (Quattro), adjusting **44.15**
- rear toe (2-wheel drive) **44.11**
- rear toe (Quattro), adjusting **44.15**

Wheels/tires
- assembly **44.2**
- paint, refinishing **44.7**
- rotating **44.6**
- technical data (Coupe) **44.4**
- vibrations, eliminating **44.16**

★ **NEW INFORMATION** since last filming

cardiagn.com

Technical Data, Wheels/Tires

Model/Country	Tire size	Wheel	Rim offset/ Bolt circle dia (mm)
Audi 80/USA	175 70 HR 14	5-1 2 J x 14*	45 108
Audi 90 USA	195 60 VR 14	6 J x 14	45 108
Audi 90/CAN	195 60 HR 14	6 J x 14	45 108
Spare wheel	115 70 R 15 125 90 R 15**	4 J x 15 4 J x 15	56 108 45 108

*steel disc wheel
**for vehicles with ABS

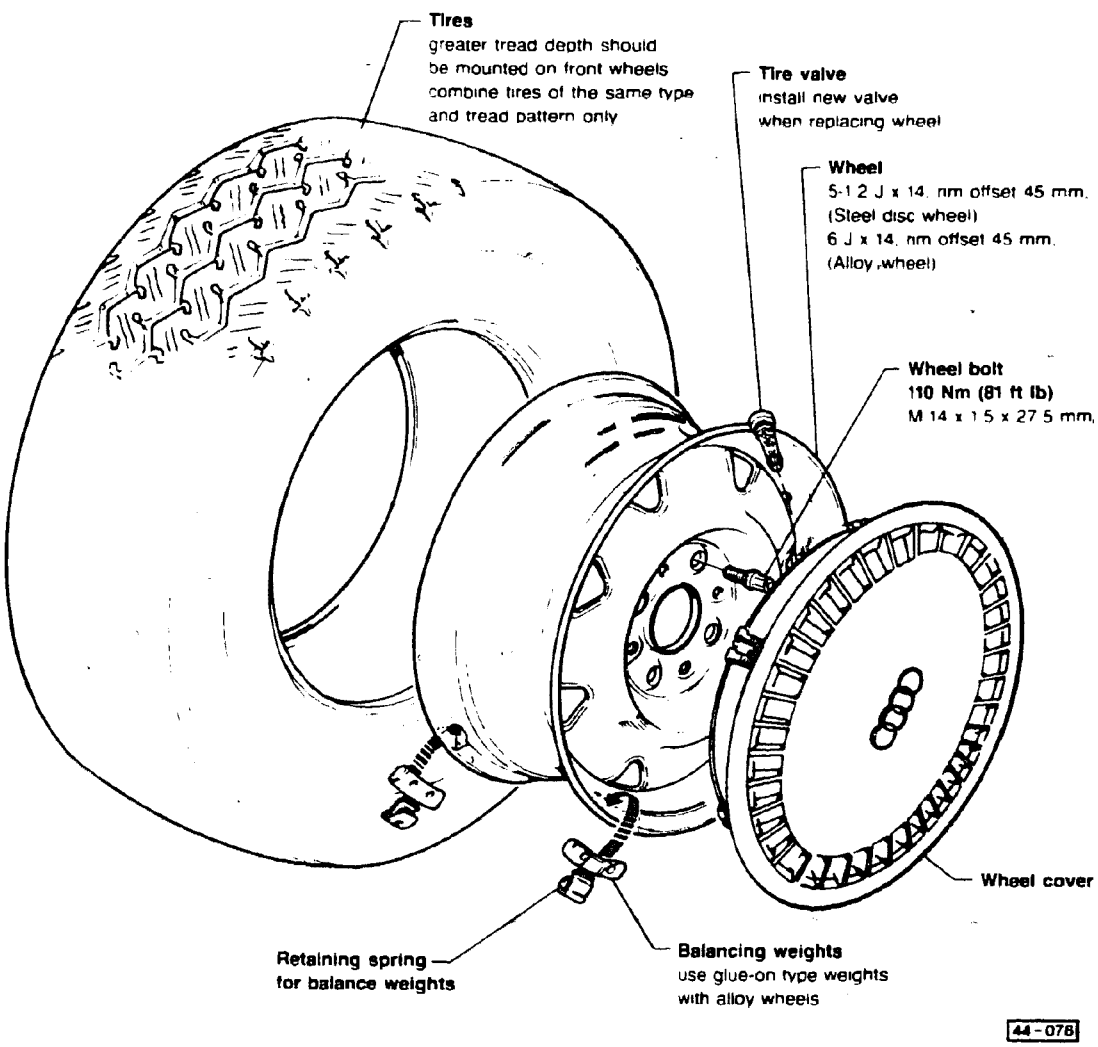

G-2

cardiagn.com

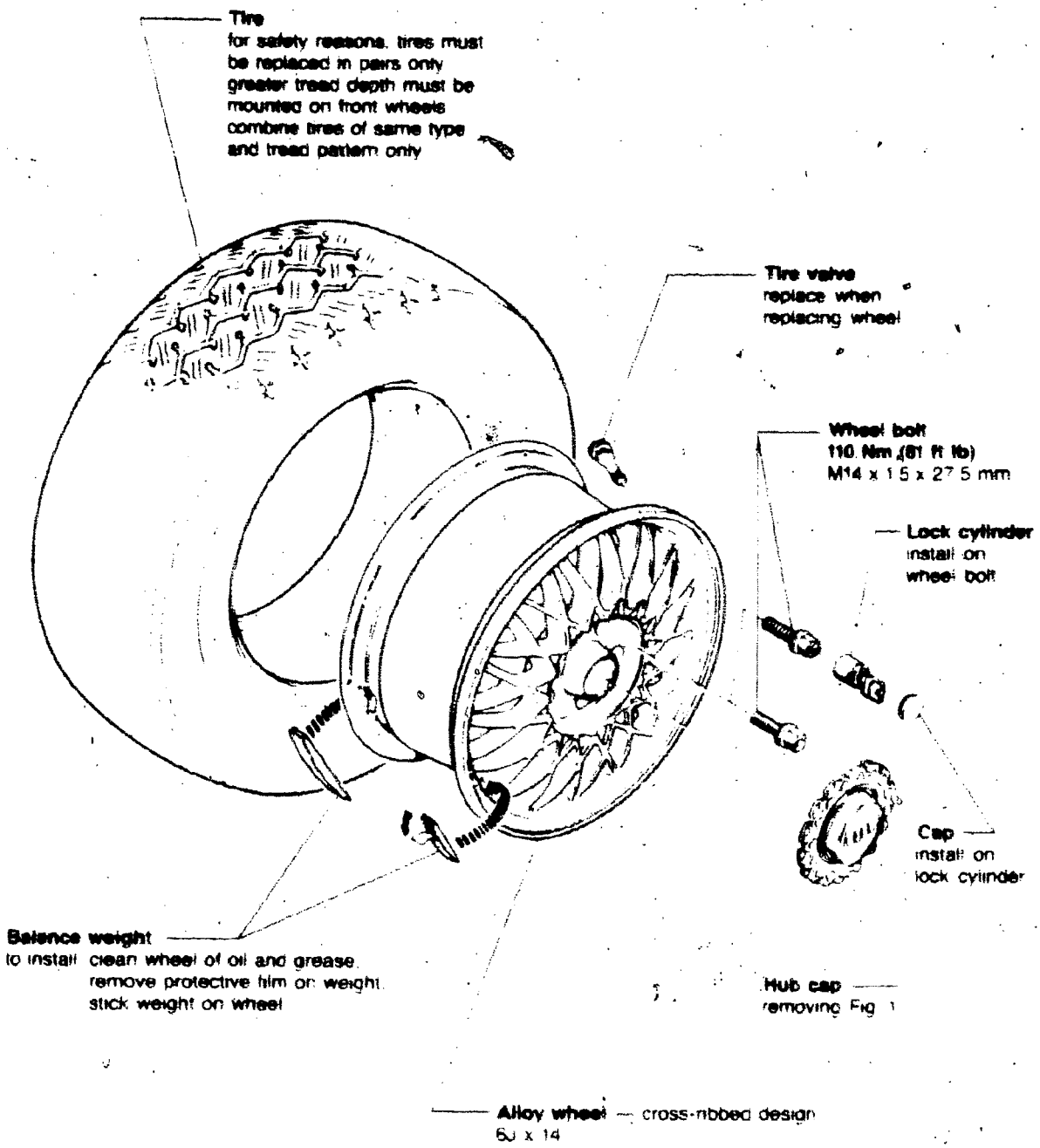

44-40

G-3

cardiagn.com

Technical Data, Wheels/Tires

Model/Country	Tire size	Wheel	Rim offset/ Bolt circle dia (mm)
Coupe/Canada	205/60 R 15 91V	6J x 15 (aero style)	37/108
Coupe/USA	205/60 R 15 91V	7J x 15 (Speedline®)	37/108
Spare wheel CAN and USA	T 125/90 R 15	4.00 B x 15*	40/108

*steel disc wheel

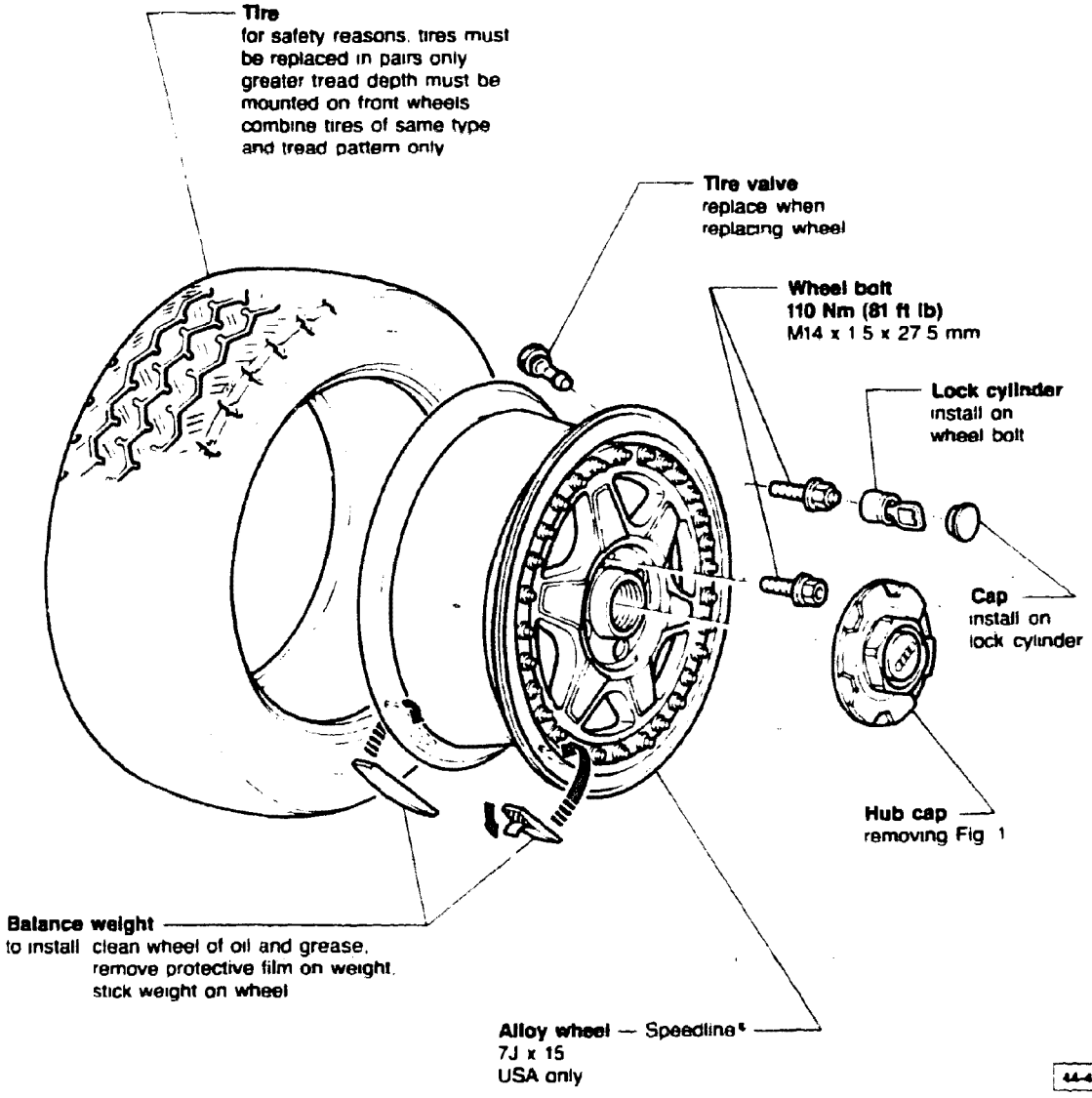

G-4

cardiagn.com

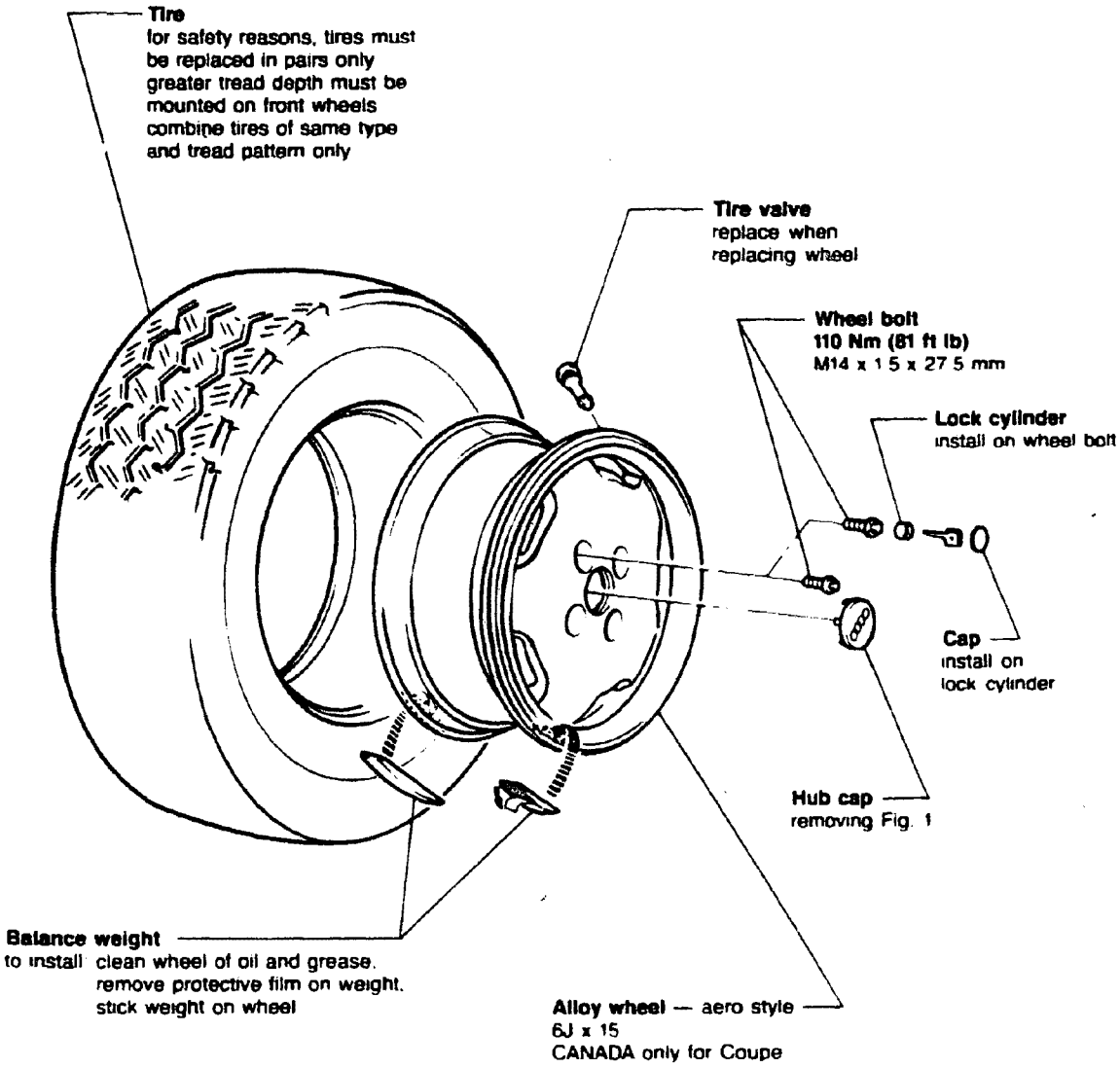

44-095

G-5

cardiagn.com

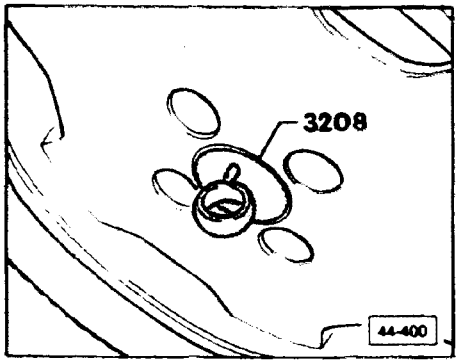

▶ **Fig. 1 Hub cap, removing (aero wheel shown)**

- clean cap with wet sponge
- install tool **3208** and press onto cap
- pull to remove cap

Tires, rotating

Most tire manufacturers have changed their tire rotation policy on radial belted tires. Previously, radial belted tires were to be rotated only from front to rear and rear to front on the same side of the vehicle.

All radial belted tires approved for use on Audi vehicles can now also be rotated **diagonally** if unusual wear, such as feather-edging, is observed.

In cases of unusual tire wear, the suspension must be checked prior to tire rotation (i.e. alignment, condition of suspension components, tire balance).

cardiagn.com

Paint refinishing procedure

Paint on steel and alloy wheels can be damaged by stone chipping, chemical reaction of road salts, etc. Refinish as follows:

Material required

- standard primer filler, ALN 766 001.13/10
- hardener, ALZ 010 000.13
- 2K acrylic top coat, ALN 769 _ _ _
- undercoat metallic, ALD 645 _ _ _
- 2K acrylic clear varnish, ALN 769 000.10

CAUTION

Part numbers are for reference only. Always check with your Parts Department for latest parts information.

Work procedure

— remove wheels from vehicle
— remove tires from wheels
— clean wheels thoroughly using wheel cleaner, Part No. ZVW 177 201, or equivalent

— dry wheels thoroughly after cleaning
— remove white or yellow paint marks on newer alloy wheels with a bristle brush
— remove marks on older wheels with a wire bursh

— if replacement wheels need to be painted to match, or if paint on old wheels is chipped: sandblast or glass bead wheels to remove old paint and prepare surface

WARNING

Always wear safety glasses or goggles when sandblasting or glass beading.

— mask wheel bolt holes and bolt mating surfaces to ensure proper tightening torque on reinstallation
— spray on a thin but good covering coat of standard primer filler ALN 766 001 13/10 (follow mixing instructions on label)

Note

Only this acid-hardening filler guarantees satisfactory binding of the top coat on all wheels.

— apply top coat
— seal chrome paint L 009 100, LA 009 100 and all metallic undercoat paints with acrylic clear varnish, ALN 769 000.10.
— oven dry at maximum 70°C (160°F)

cardiagn.com

Wheel Alignment Data for Front and Rear Axles

Note

It is advisable to measure wheel alignment after at least 1000-2000 km (600-1200 miles) when the coil springs have been given a chance to settle.

Checking requirements

- correct adjustment of measuring equipment
- curb weight of vehicle
- tire pressures correct
- vehicle positioned accurately and suspension bounced
- no excessive play in steering and steering linkage
- check suspension for excessive play and damage

Front axle		Standard
Total toe (wheels not pressed)		+ 10' ± 10'
Camber	(at straight-ahead position)	45' ± 30'
	maximum permissible difference between right and left	max 30
Toe angle difference between left and right		55 ± 30'
Caster	(not adjustable)	+ 1 15' ± 30'
	maximum permissible difference between both sides	max 30'

Rear Axle		Standard
Camber	(not adjustable)	- 1 ± 20'
	maximum permissible difference between both sides	max 30
Total toe	(not adjustable)	+ 20' ± 20'
	maximum permissible difference between both sides	max 25

cardiagn.com

Wheel Alignment Data for Front and Rear Axles

Note

It is advisable to measure wheel alignment after at least 1000-2000 km (600-1200 miles) when the coil springs have been given a chance to settle.

Checking requirements

- correct adjustment of measuring equipment
- curb weight of vehicle
- tire pressures correct
- vehicle positioned accurately and suspension bounced
- no excessive play in steering and steering linkage
- check suspension for excessive play and damage

Front axle		Standard
Total toe (wheels not pressed)		+ 10' ± 10'
Camber	(at straight-ahead position)	- 50' ± 30'
	maximum permissible difference between right and left	maximum 30'
Toe angle difference at 20° lock to left and right		- 1° + 30'
Caster	(not adjustable)	+ 1° 15' ± 30'
	maximum permissible difference between both sides	maximum 30'

Rear Axle		Standard
Camber		- 45' ± 30'
	maximum permissible difference between both sides	maximum 30'
Total toe		+ 20' ± 10'
	maximum permissible difference between both sides	maximum 25'

cardiagn.com

Wheel Alignment Data for Front and Rear Axles

Note

It is advisable to measure wheel alignment after at least 1000-2000 km (600-1200 miles) when the coil springs have been given a chance to settle.

Checking requirements

- correct adjustment of measuring equipment
- curb weight of vehicle
- tire pressures correct
- vehicle positioned accurately and suspension bounced
- no excessive play in steering and steering linkage
- check suspension for excessive play and damage

Front axle		Sedan	Coupe
Total toe (wheels not pressed)		+ 10′ ± 10′	+ 10′ ± 10′
Camber	(at straight-ahead position)	− 50′ ± 30′	− 50′ ± 30′
	maximum permissible difference between right and left	maximum 30′	maximum 30′
Toe angle difference at 20° lock to left and right		− 1° ± 30′	− 1° ± 30′
Caster	(not adjustable)	+ 1° 25′ ± 30′	+ 2° 15′ ± 30′
	maximum permissible difference between both sides	maximum 30′	maximum 30′

Rear Axle		Sedan	Coupe
Camber		− 45′ ± 30′	− 45′ ± 30′
	maximum permissible difference between both sides	maximum 30′	maximum 30′
Total toe		+ 20′ ± 10′	+ 20′ ± 10′
	Toe per wheel	+ 10′ ± 5′	+ 10′ ± 5′

cardiagn.com

Example

Toe angle of left rear wheel +15'	Toe angle of right rear wheel +5'
15' − 5' = 10' 10' ÷ 2 = 5'	
Toe (Deviation in alignment) = +5'	

Example

Toe angle of left rear wheel +15'	Toe angle of right rear wheel −5'
15' + 5' = 20' 20' ÷ 2 = 10'	
Toe (Deviation in alignment) = +10'	

Determining total toe/alignment of rear wheels (Two-wheel drive vehicles only)

1 — If both toe angles are positive (+/+) or negative (−/−), subtract the lower number from the higher number and divide by 2.

2 — If one toe angle is positive and the other negative (+/−), add the two numbers and divide by 2.

The result obtained is the actual deviation of the running direction from the longitudinal direction of the vehicle.

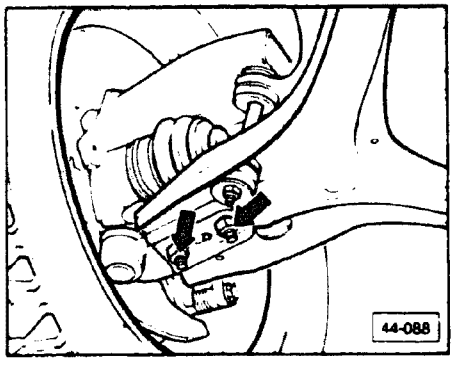

Front axle camber, adjusting (vehicles with 2-point ball joint mounting)

- loosen both ball joint mounting nuts on control arm **(arrows)**

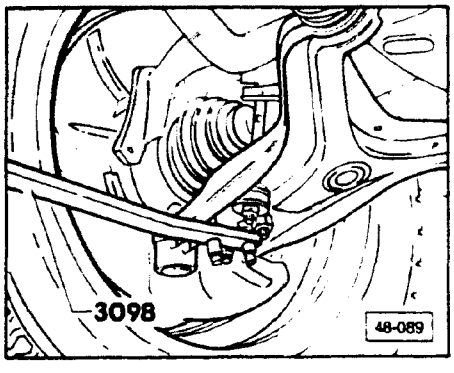

- move ball joint with lever **3098** and adjust camber to specification
- tighten mounting nuts to 65 Nm (48 ft lb)
- recheck camber and correct if necessary
- check toe, adjust if necessary

cardiagn.com

Front camber, adjusting (vehicles with 3-point ball joint mounting)

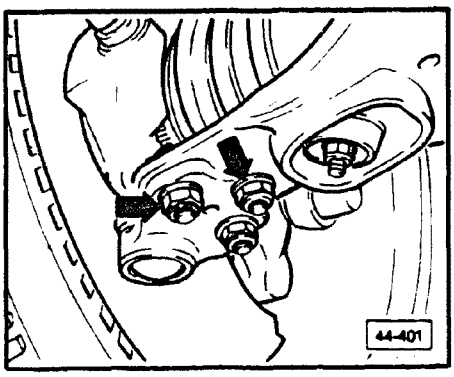

- loosen front and center ball joint nuts (**arrows**) until washer can be moved back and forth
- install tool **3196** with hole in tool over center ball joint nut

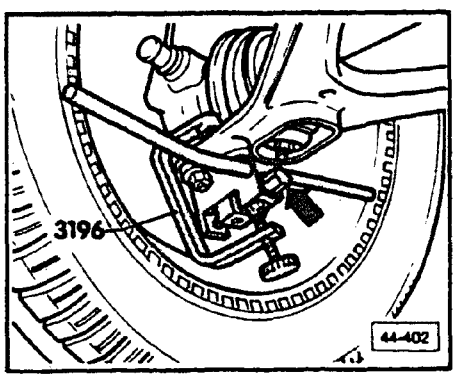

- turn spindle (**arrow**) so knurled pin on top of tool engages in hole in ball joint and tighten

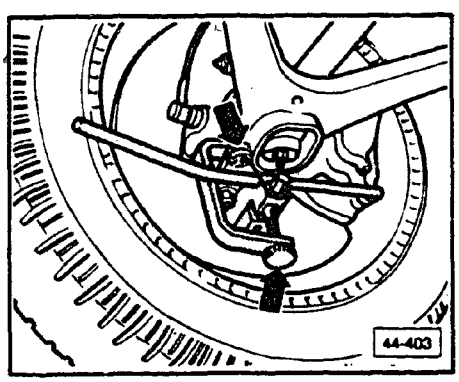

- place top of tool clamp (**upper arrow**) over head of center ball joint bolt and tighten with knurled knob (**lower arrow**)

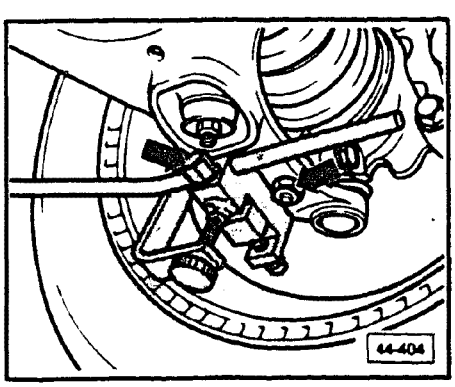

- loosen rear nut (**right arrow**) until washer can be moved
- turn spindle (**left arrow**) until desired camber is reached

Note

If the ball joint jams on the control arm when the spindle is turned (no camber change), move the special tool by pulling the lever from side to side.

more

cardiagn.com

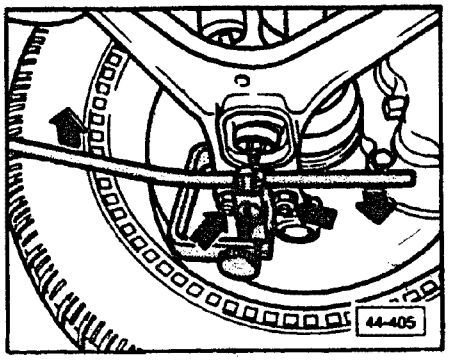

- pull front end of tool lever inward as far as possible (**left arrow**) while pushing rear end of lever outward with similar force (**right arrow**) and hold lever in position
- have second mechanic tighten two outer ball joint mounting nuts (**center arrows**)
- remove special tool
- tighten center ball joint mounting nut
- torque all ball joint mounting nuts to 65 Nm (48 ft lb)
- check toe setting, adjust if necessary

cardiagn.com

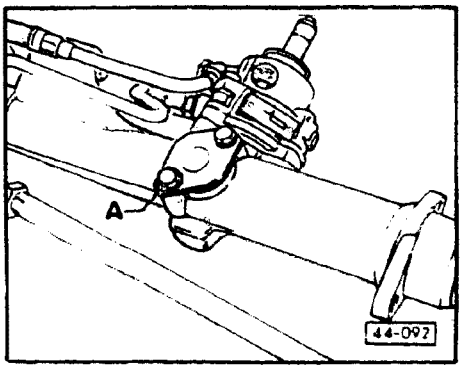

Front axle toe, adjusting

Note

Only use optical measuring equipment and special tool **3075**.

Work sequence

- turn steering gear to center position
- remove bolt **A**

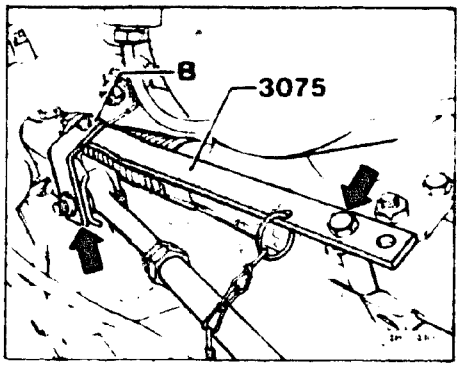

- attach centering tool **3075** with bracket **B** over mounting nut of left tie rod (**left arrow**)
- remove bolt from spacer on chain of centering tool
- insert bolt in hole (marked with **L**) on centering tool and tighten to steering gear (**right arrow**)

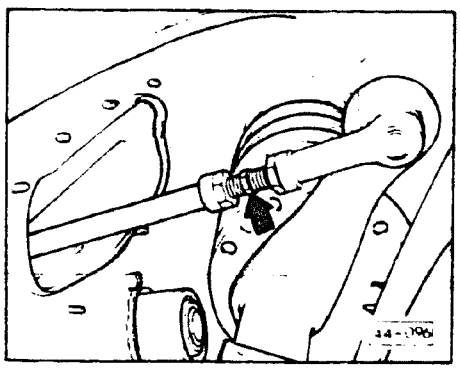

- measure and divide total toe in half
- loosen clamps and outer lock nut on both tie rods
- adjust each tie rod until specified setting for toe is reached
- tighten clamp and lock nuts on tie rods
- reposition steering wheel if necessary (steering wheel spokes in horizontal position)
- remove centering tool and tighten bolt **A** to 20 Nm (14 ft lb)

cardiagn.com

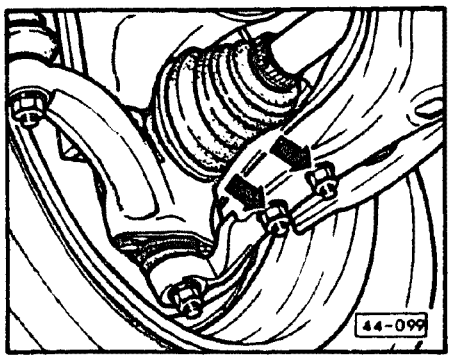

Rear camber, adjusting

Work sequence

- loosen lock nuts (**arrows**)

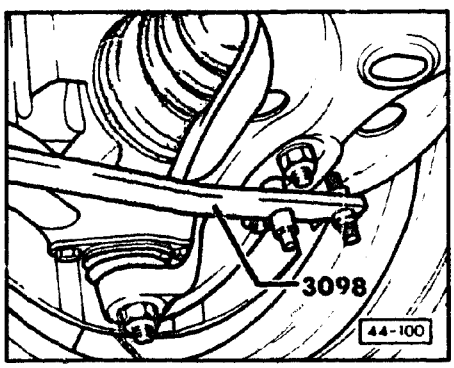

- move ball joint with lever **3098** in slotted holes in control arm
- tighten lock nuts to 75 Nm (55 ft lb)
- recheck camber and correct if necessary
- check toe, and adjust if necessary

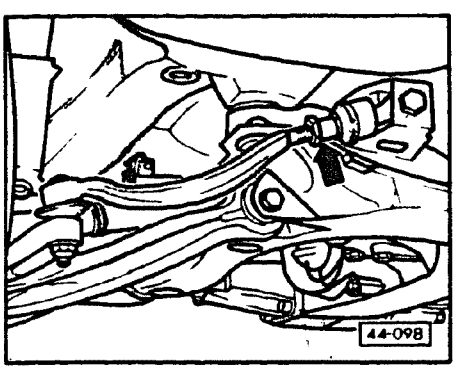

Rear toe, adjusting

Work sequence

Note

Check adjustment on left and right with an optical axle measuring device.

- loosen lock nut (**arrow**)
- adjust toe by turning tie rod end
- tighten lock nut to 40 Nm (30 ft lb)

cardiagn.com

Eliminating Vibrations

Wheel imbalance generates dynamic forces that can cause vehicle components such as steering gear, wheel suspension components and body to resonate. This, in turn, leads to vibrations of the steering wheel and the vehicle itself.

When vibrations of this type occur, use the following procedure to determine the source of the imbalance.

- check tire pressures and correct if necessary
- check surfaces of tires for scuffing, flat spots or other damage
- road test vehicle to determine type of condition and speed range
- check suspension components for damage or wear

Note

If a component is replaced or if tires are worn unevenly, check and align front suspension as necessary. Road test vehicle again after alignment.

- check wheel mountings
  - center boss of hub or brake drum must protrude beyond, or be flush with, center collar of wheel. If not, replace wheel.

cardiagn.com

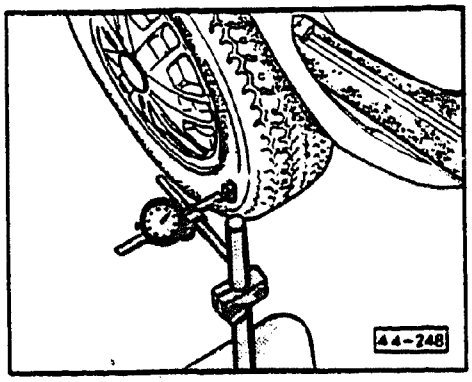

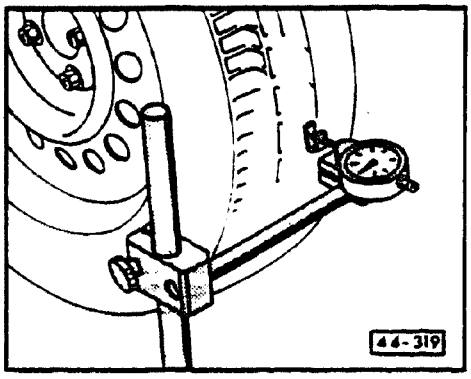

Wheel and tire runout, checking

- set up dial indicator so roller is just making contact with center of tire tread or tire wall
- rotate wheel slowly by hand and read needle deflections off meter
- mark location of maximum radial runout on tire

	Radial	Lateral
Tire with wheel	0.8 mm (0.032 in.)	1.2 mm (0.059 in.)

- if runout figures are within limits, balance wheel/tires (see below Wheels/tires balancing)
- if runout figures are outside limits, rotate tire on wheel
- deflate tire and push tire beads down into wheel bed
- rotate tire 120° on wheel
- inflate tire and remeasure radial runout
- if maximum figure is still outside limits, rotate tire a further 120° on wheel and remeasure radial runout
- if outside limits, check lateral and radial runout of wheels

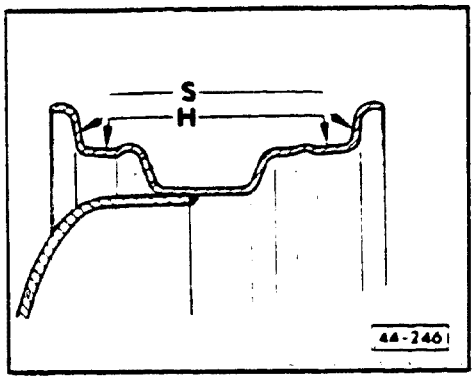

Wheel runout, checking

- dismount tire and mount wheel in balancing machine or on vehicle
- measure radial and lateral runout at all points shown

G-17

cardiagn.com

	Radial (H)	Lateral (S)
Steel wheel	0.6 mm (0.024 in.)	0.8 mm (0.032 in.)
Alloy wheel	0.5 mm (0.020 in.)	0.5 mm (0.020 in.)

CAUTION

Wheels MUST be mounted with same centering method as on vehicle (i.e. bolted to hub/arbor) and centered on a cylindrical (not conical) surface.

CAUTION

For on-the-vehicle wheel balancing of Quattro models, both axles of the vehicle MUST be raised and the parking brake released. If not, damage to the Torsen center differential will result.

Note

Peak readings, up or down, which are caused by small imperfections on the wheel surface, can be ignored.

- if maximum values are exceeded, replace wheel and recheck runout of wheel and tire assembly
- balance tire and wheel assembly

Wheels/tires, balancing

- remove existing balance weights before balancing
  - maximum permissible residual imbalance = 5 grams

Note

For on-the-vehicle balancing of the driving wheels, the wheels must be driven by the engine so that wheel speeds are synchronized.

Wheels, installing

- install wheels with point of maximum radial runout at top, then tighten lug bolts.

Note

If tire wear is approximately equal, the wheels with the lowest amount of radial runout and the smallest balance weights should be installed at the front.

- repeat road test of vehicle

If vibrations are still present, the radial and lateral oscillations of one or more tires are too high. These oscillations cannot be measured with normal workshop equipment. For such cases, the front tires, rear tires or all four tires should be replaced.

cardiagn.com

Index

ABS system
- notes on repair **45.2**
- front wheel components (2–wheel drive) **45.7**
- front wheel components **45.8a**
- rear wheel components (2–wheel drive) **45.9, 45.10a**
- rear wheel components (Quattro) **45.11, 45.13**

Acceleration switch
- removing/installing **45.10**

Combination relay
- removing/installing **45.6**

Electronic control unit
- removing/installing **45.6**

High/low pressure
- checking **45.6**

Hydraulic unit
- assembly (2–wheel drive) **45.4**
- assembly (Quattro) **45.5**
- replacing **45.3**

Wheel speed sensors
- front, removing/installing **45.8**
- rear, removing /installing **45.10, 45.10b, 45.12**

General repair notes
- cautions/warnings **45.13a**

Troubleshooting
- ABS 2–LED test procedure **45.14**

cardiagn.com

Working on the ABS system

The Anti-lock Braking System (ABS) is basically maintenance free.

Heat and sparks can cause damage

- disconnect plug from control unit before using electric welding equipment on car
- control unit cannot stand heat of paint drying oven or heat lamp more than 95°C (203°F) even for short time, –85°C (185°F) for more than 2 hours
- remove control unit if necessary

Disconnect battery

- disconnect ground strap on battery before removing control unit

When testing ABS

- do not drive car with tester connected

Check after brake job is finished

After repairing or replacing
- brake pads
- discs
- cable hoses
- master cylinder
- parking brake components

- test drive car faster than 6 km/h (4 mph)
- indicator light must not come on if ABS system is **OK**

After work on ABS system
- hydraulic unit
- electronic control unit
- speed sensor
- wiring harness
- brake lines
- proportional valves

- check ABS system using tester

cardiagn.com

Hydraulic unit, replacing

- disconnect battery ground strap
- disconnect brake lines
- remove hydraulic unit

CAUTION

When removing and installing brake lines make sure that the lines are identified or installed according to the designation on the hydraulic unit.

Install only original equipment brake lines.

Seal brake lines and connections immediately during repairs.

Tightening torque of brake lines is 15 Nm (11 ft lb).

For all work which requires an open hydraulic system, bleed the brake system with brake filler/bleeder, **US 1116**.

In addition, a high and low pressure check should be performed on the brake system (see page 45.6).

cardiagn.com

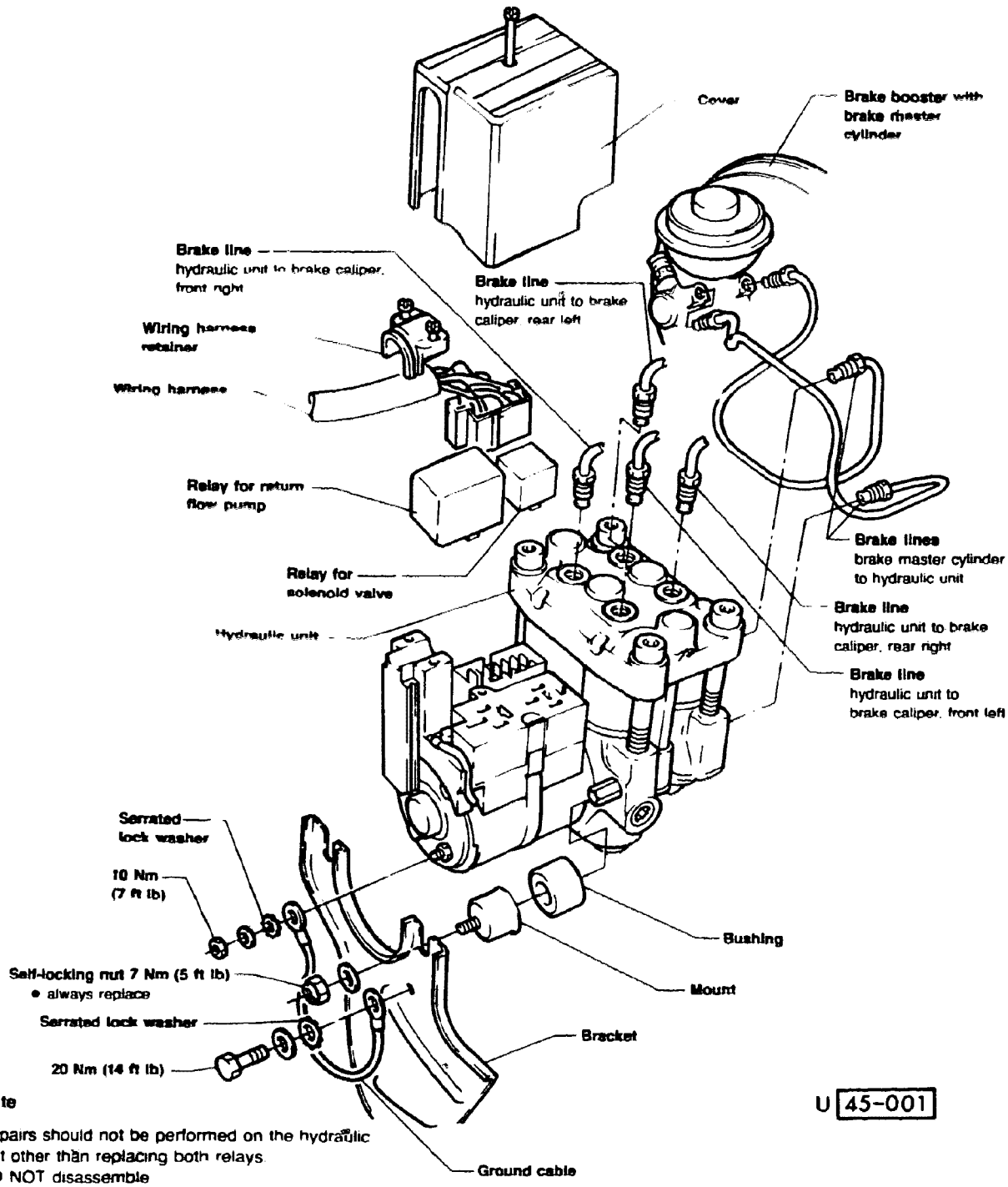

U 45-001

Note

Repairs should not be performed on the hydraulic unit other than replacing both relays.
DO NOT disassemble

If necessary, replace complete hydraulic unit.

Check high and low pressure (see page 45.6)

Note

For Quattro hydraulic unit, see page 45.5

A-4

cardiagn.com

CAUTION

Repairs should not be performed on the hydraulic unit other than replacing both relays DO NOT disassemble.

If necessary, replace complete hydraulic unit.

Check high and low pressure (see page 45.6).

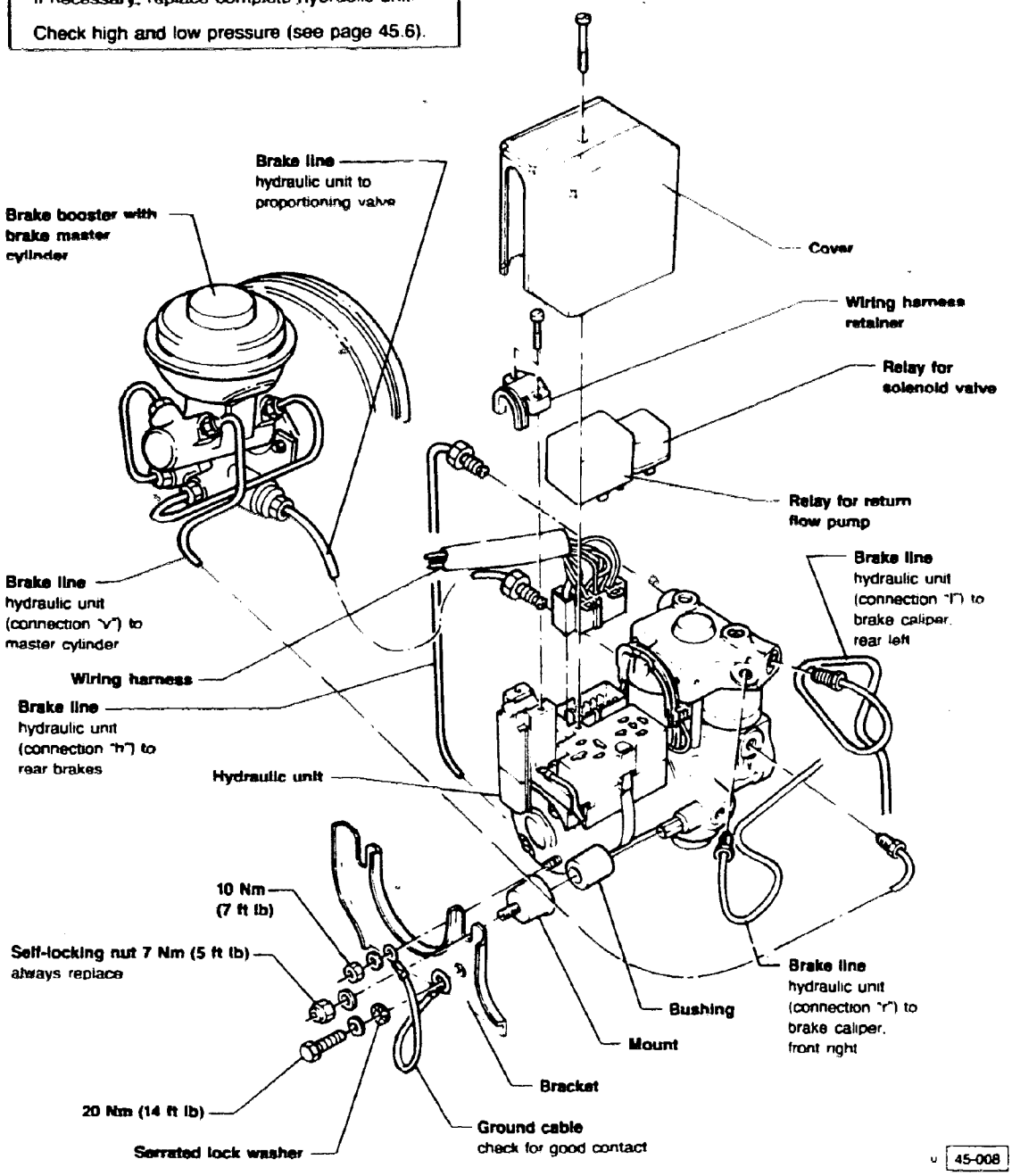

A-5

cardiagn.com

High and low pressure, checking

Work sequence

- unscrew bleeder screw on one front brake caliper
- connect **VW 1310** and bleed
- install brake pedal depresser between brake pedal and driver's seat

- load brake pedal until gauge indicates **50 bar** (725 psi)
- watch gauge for 45 seconds
  - pressure drop must not be more than 4 bar (58 psi)
  - with a large pressure drop, replace hydraulic unit

- adjust brake pedal depresser so that gauge indicates a line pressure of 6 bar (87 psi)
- test for 3 minutes
  - pressure drop must not be more than 1 bar (14.5 psi)
  - if pressure drop is greater, replace hydraulic unit

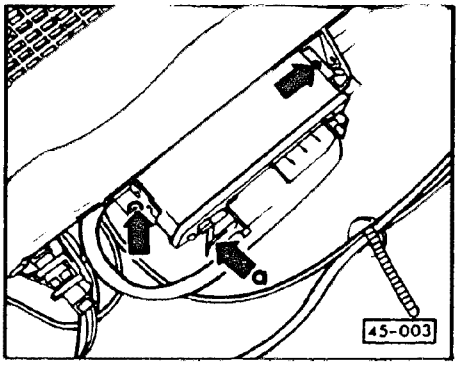

▶ **Fig. 1 Electronic control unit, removing/installing**

Location: Under rear seat, left side

Note

Turn ignition **OFF** during removal/installation.
- connector held in control unit by spring **(arrow a)**
- control unit secured with screws **(arrows)**

Combination relay, removing/installing

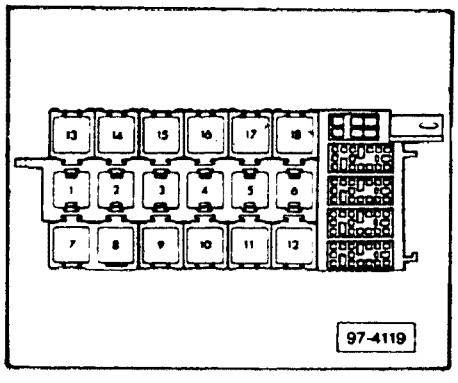

▶ Location: under instrument panel, in auxiliary relay panel, relay position **1**

Note

Turn ignition **OFF** during removal/installation.

cardiagn.com

This page intentionally left blank

cardiagn.com

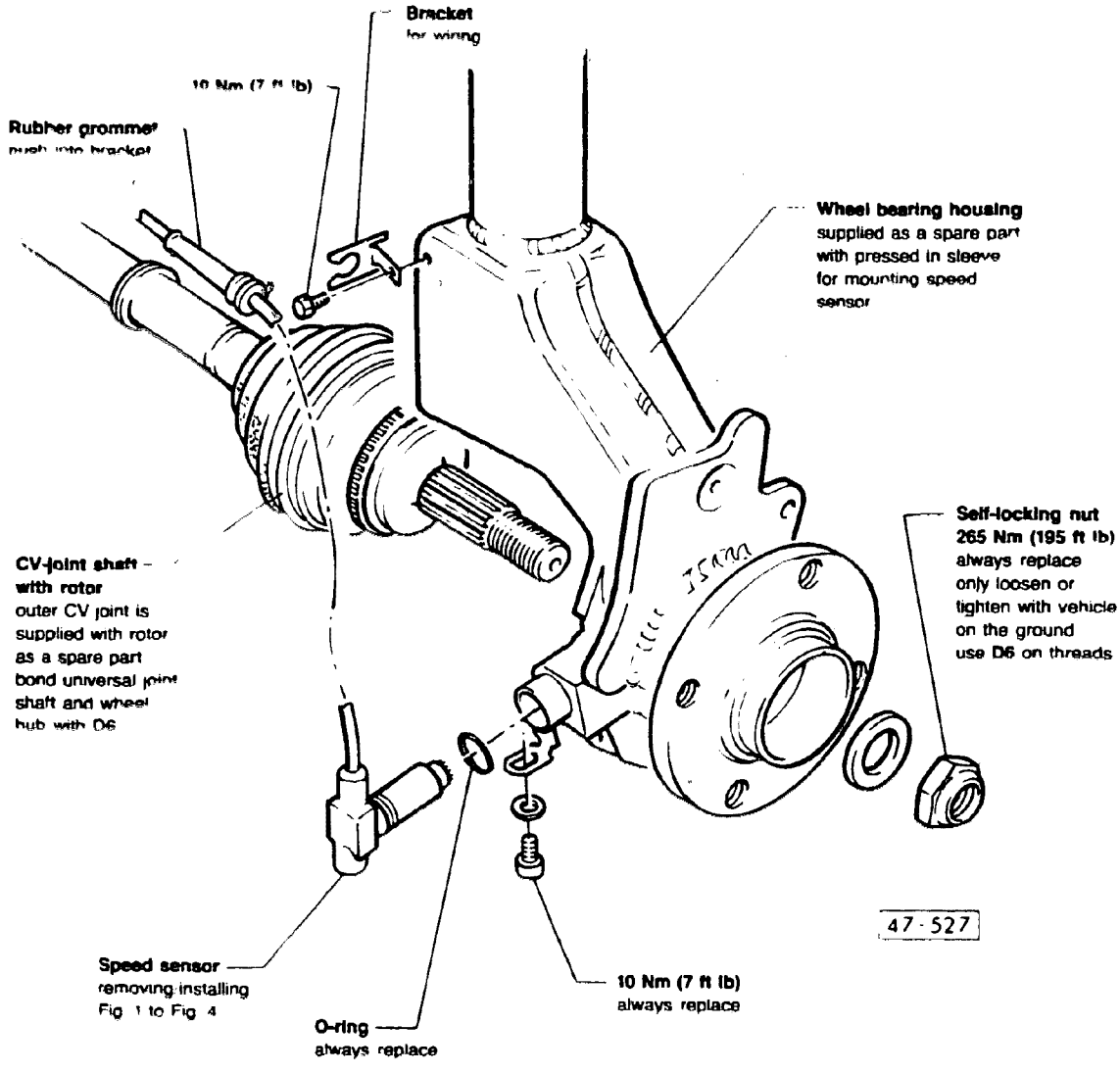

cardiagn.com

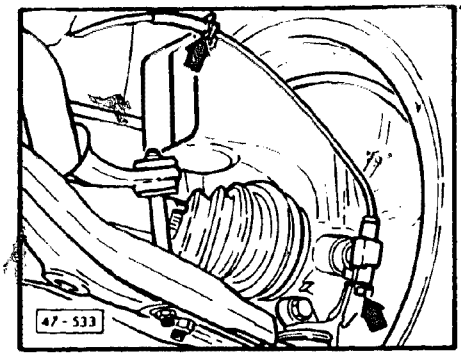

▶ Fig. 1 **Front axle speed sensors, removing/installing**

- remove mounting bolt (**lower arrow**) and take out speed sensor
- replace O-ring seal on sensor
- lubricate O-ring seal and sensor with brake assembly lubricant

- install sensor in housing until PVC tip touches rotor on CV-joint
- install new retaining bolt and tighten to 10 Nm (7 ft lb) while holding sensor against wheel bearing housing
- install wiring grommet in bracket on wheel bearing/strut housing (**upper arrow**)

Note

At repeated installation of a speed sensor, remove the old PVC cap and insert a new PVC cap, Part No. 437 927 809. This ensures that the required air gap is maintained.

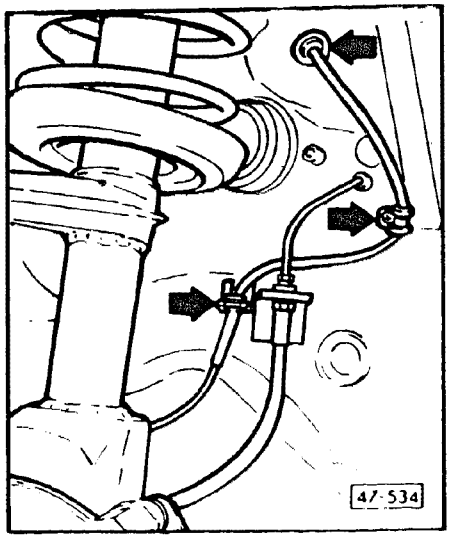

▶ Fig. 2 **Front axle speed sensor wiring harness, installing**

- route wiring through grommet to wheel housing (**upper arrow**)
- install rubber grommet on wiring to bracket on body (**lower arrow**)
- use a cable clamp where indicated (**middle arrow**)

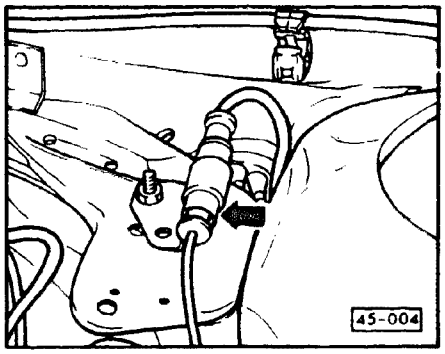

▶ Fig. 3 **Left front wheel speed sensor, disconnecting**

- remove electrical connector from bracket (**arrow**) and separate

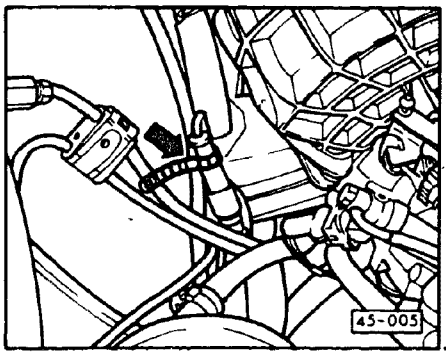

▶ Fig. 4 **Right front wheel speed sensor, disconnecting**

- loosen cable strap (**arrow**)
- remove electrical connector and separate

cardiagn.com

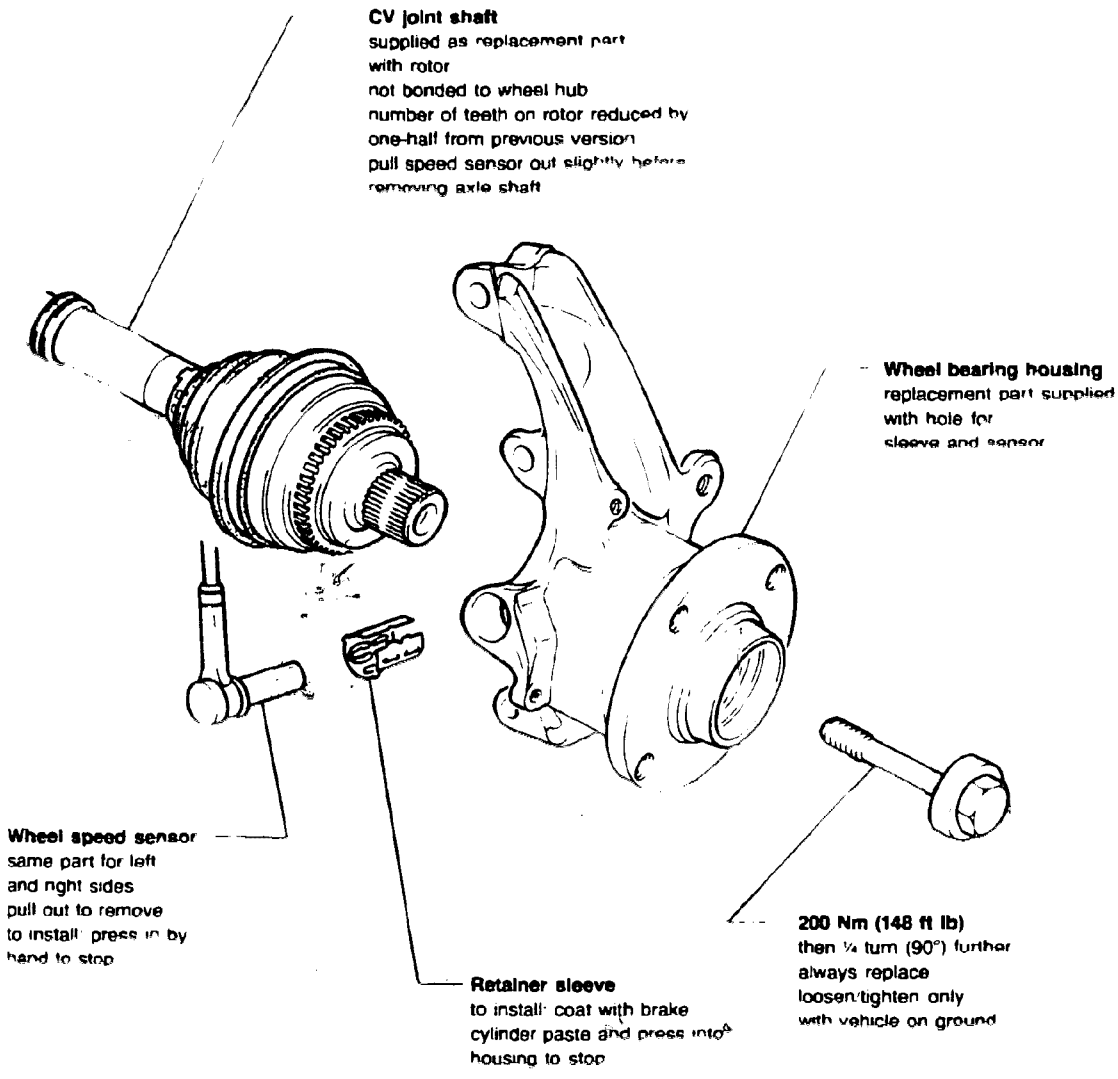

45-014

cardiagn.com

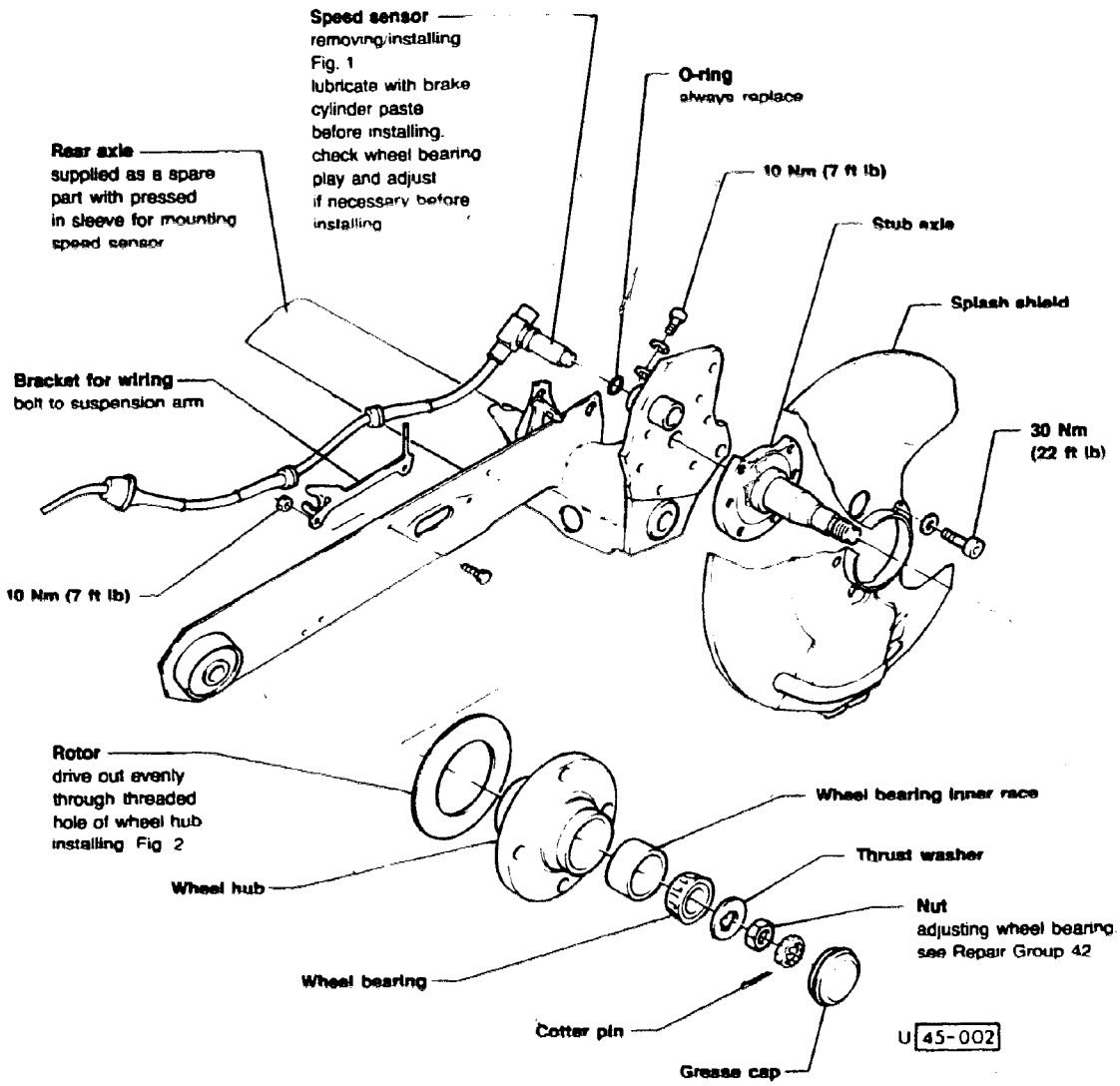

cardiagn.com

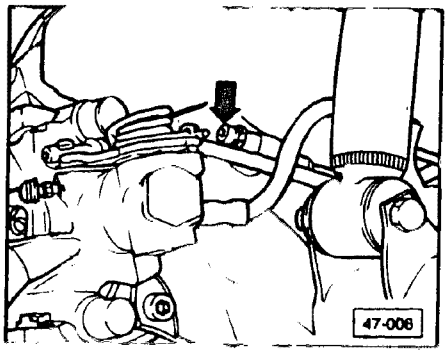

▶ Fig. 1 **Rear axle speed sensors, removing/installing (up to VIN 89 JA 377 712)**

- remove mounting bolt (**arrow**) and take out speed sensor
- replace O-ring seal on sensor
- lubricate O-ring seal and sensor with brake assembly lubricant
- install sensor in housing until PVC tip touches rotor on CV-joint

Note

During repeated installation of the speed sensor, remove the old PVC cap and replace it with a new one, Part No. 437 927 809. Only through the installation of the new PVC cap is the required air gap maintained.

- install new retaining bolt and tighten to 10 Nm (7 ft lb) while holding sensor against wheel bearing housing
- install wiring grommets in brackets on wheel bearing/strut housing

Note

Both terminal connections for the rear speed sensor are located under the seat.

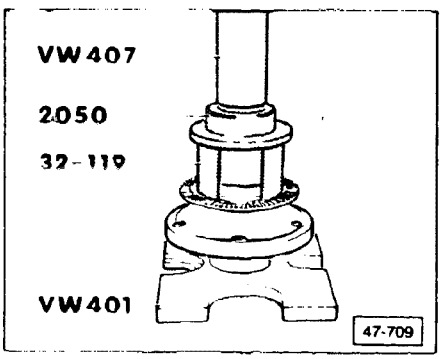

▶ Fig. 2 **Rotor, pressing on**

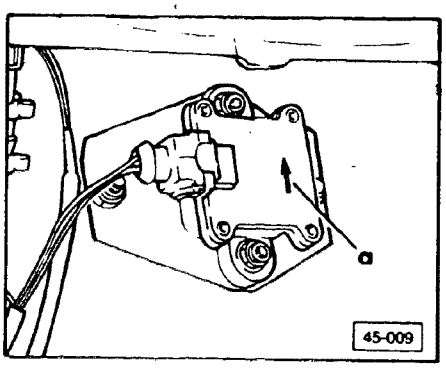

▶ Fig. 3 **Acceleration switch, removing/installing**

Location: under rear seat, left side

Note

Turn ignition **OFF** during removal/installation.

- arrow a on the switch points toward front of vehicle

Do not install the longitudinal acceleration switch in vehicles not originally equipped with it from the factory. Vehicles produced from April 1988 are equipped with the switch.

The longitudinal acceleration switch is not required for effective operation of the ABS system.

cardiagn.com

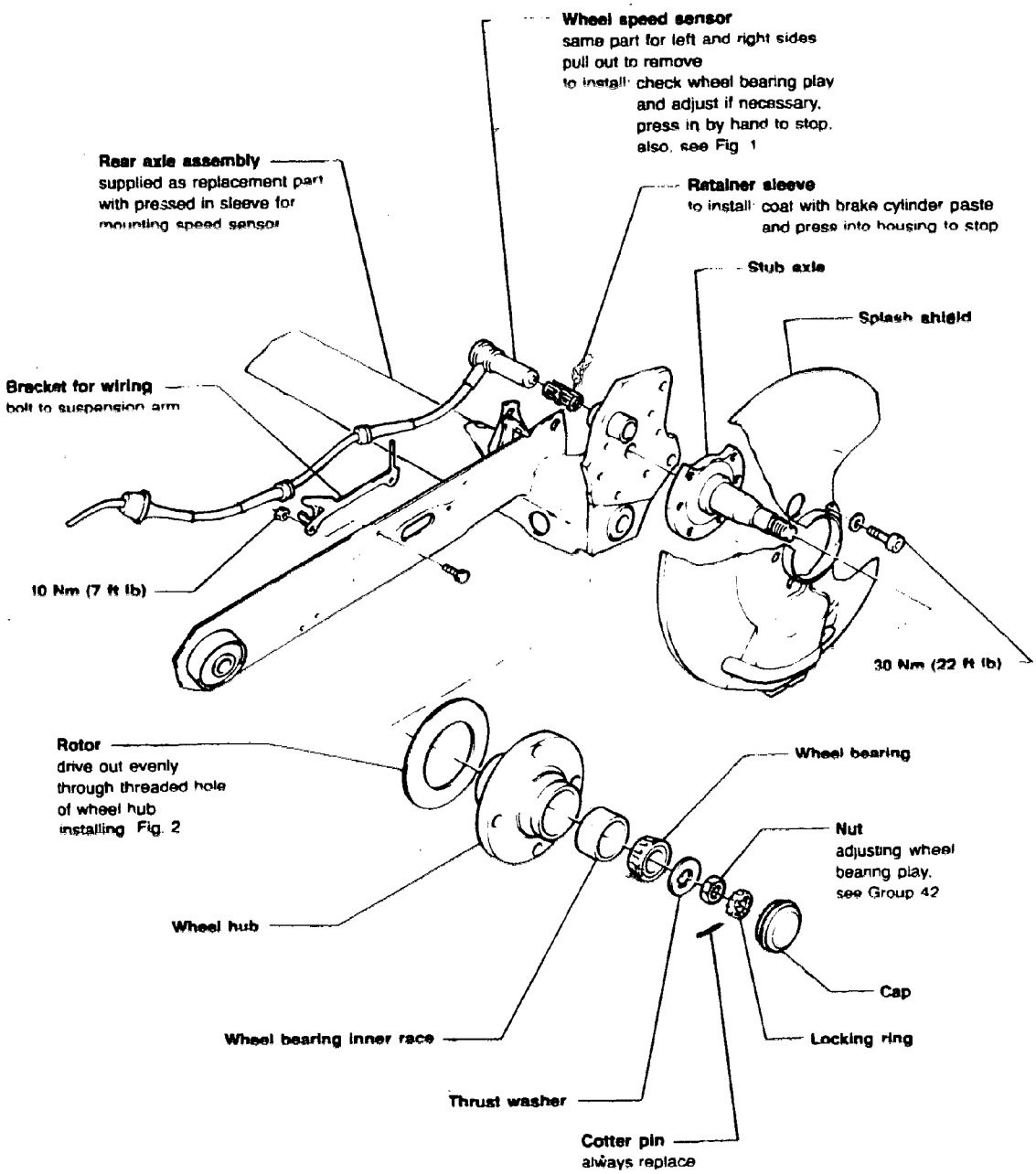

45-020

A-13

cardiagn.com

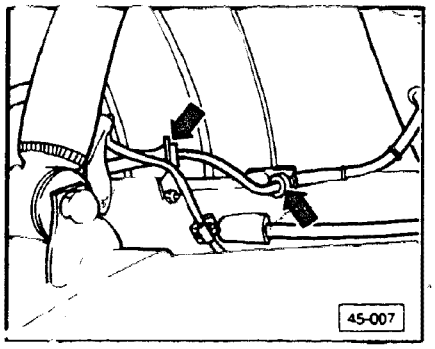

▶ Fig. 1 **Wheel speed sensor, installing**

- install rubber grommets on sensor into bracket on suspension arm (arrows)

Note

Both terminal connections for the rear wheel speed sensors are located under the rear seat.

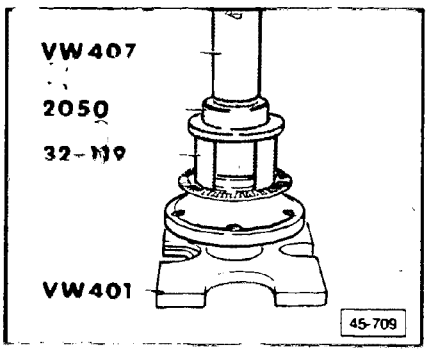

▶ Fig. 2 **Rotor, pressing on**

cardiagn.com

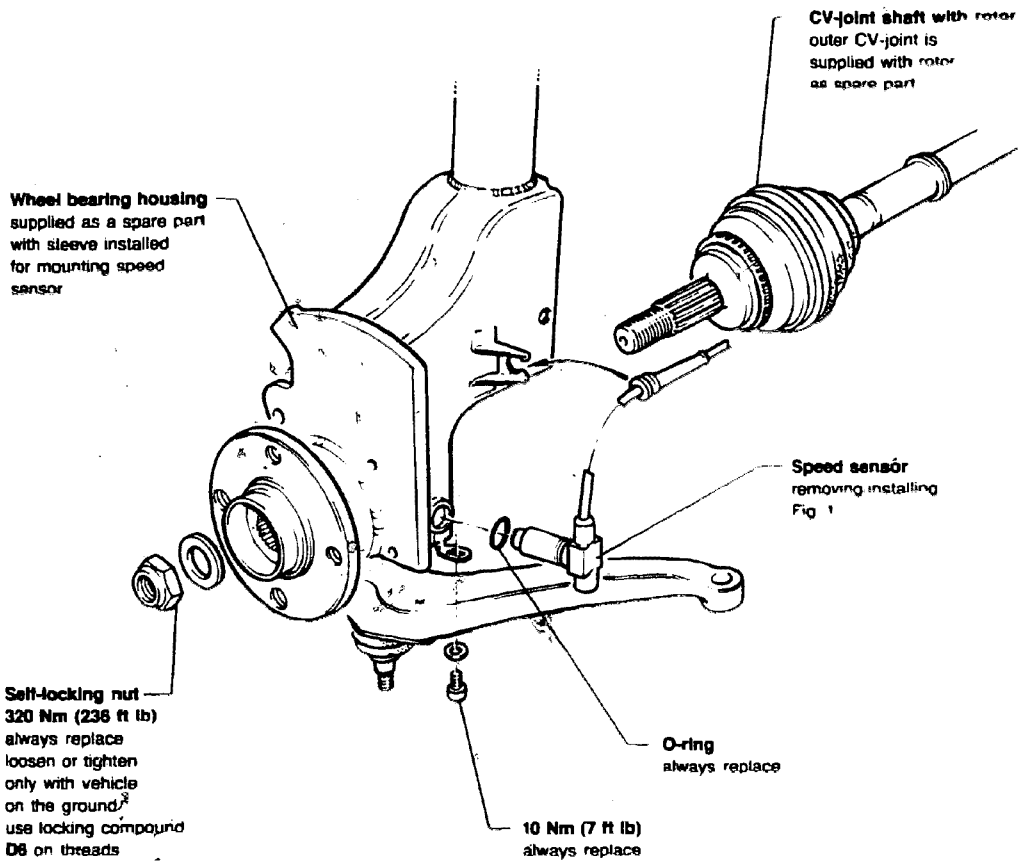

cardiagn.com

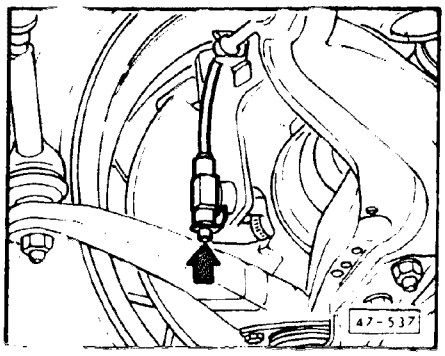

▶ Fig. 1 **Rear axle speed sensors, removing/installing**

- remove mounting bolt (**arrow**) and take out speed sensor
- replace O-ring seal on sensor
- lubricate O-ring seal and sensor with brake assembly lubricant
- install sensor in housing until PVC tip touches rotor on CV-joint
- install new retaining bolt and tighten to 10 Nm (7 ft lb) while holding sensor against wheel bearing housing
- install wiring grommets in brackets on wheel bearing/strut housing

Note

Both terminal connections for the rear speed sensor are located under the rear seat.

cardiagn.com

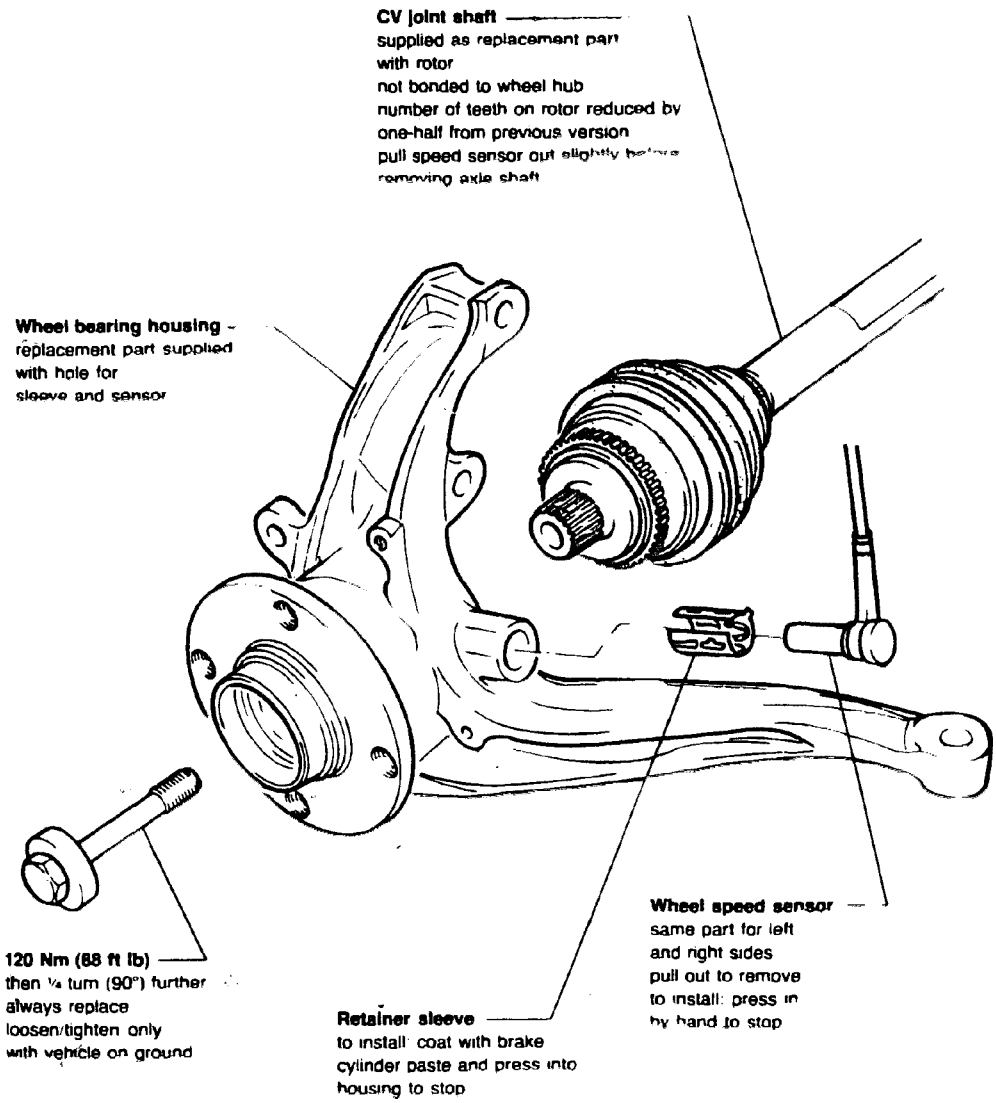

cardiagn.com

45-013

CAUTION

- switch ignition **OFF** before connecting or disconnecting ABS control unit connector
- disconnect ABS control unit connector before using electrical welding equipment on the vehicle
- disconnect the battery connections before charging the battery or replacing the hydraulic modulator
- remove ABS control unit before drying paint repairs in an oven if temperatures will be above 85°C (185°F) for more than two hours
- do not use mini-spare tires on vehicles equipped with ABS. Use wheels and tires of matching/size on ABS equipped vehicles
- do not drive the vehicle with the anti-lock brake tester connected

General repair notes

The complete testing procedure using the ABS 2-LED Tester must be done after any repairs are made to the following:

- hydraulic modulator
- ABS control unit
- wheel speed sensors
- ABS wiring harness

It is also necessary to perform the test procedure if the brake lines or brake pressure regulators are replaced because of accident damage.

After repairs to the brake system that do not affect the anti-lock system components, do the following operational test of the ABS:

- switch ignition **ON**
  - ABS indicator light lights
- drive vehicle with differential locks **NOT** engaged at speed over 4 mph (6 km/h)
  - ABS indicator light must not light

Do this test after repairing/replacing the following components:

- brake pads and/or brake discs
- brake hoses
- brake servo or master cylinder
- brake cables and hand brake components

Note

During a final test drive, make sure that at least one controlled braking sequence is performed with the ABS **ON**.

cardiagn.com

CONTINUED IN THE

BEGINNING OF NEXT ROW

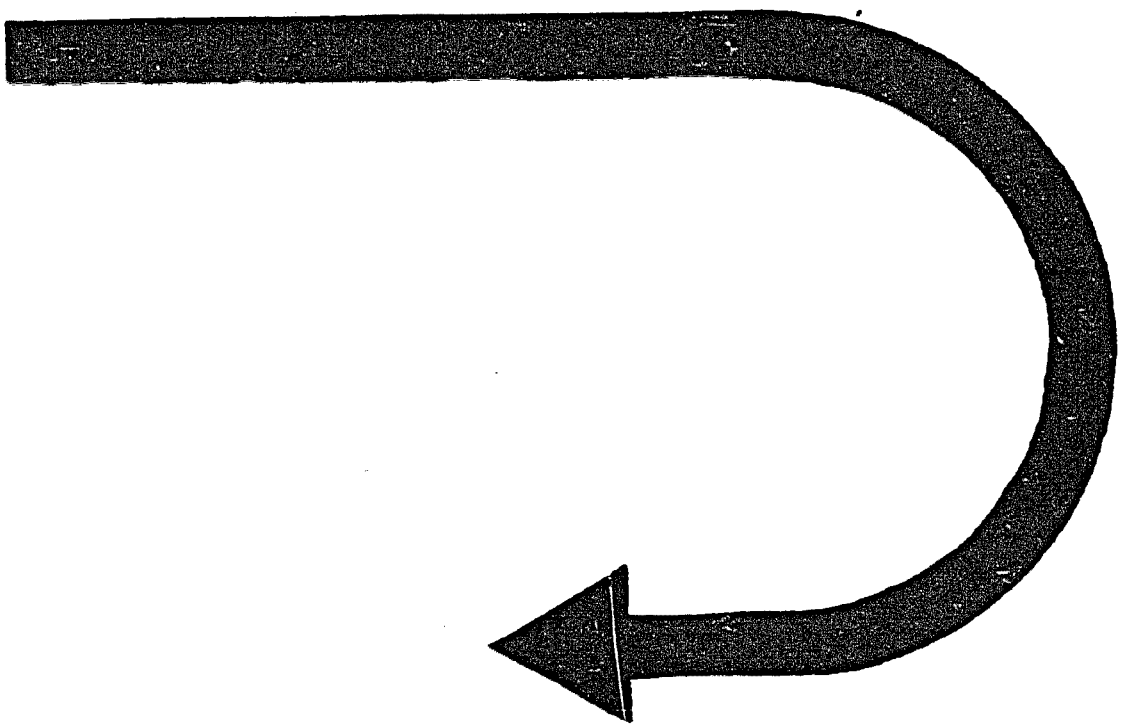

cardiagn.com

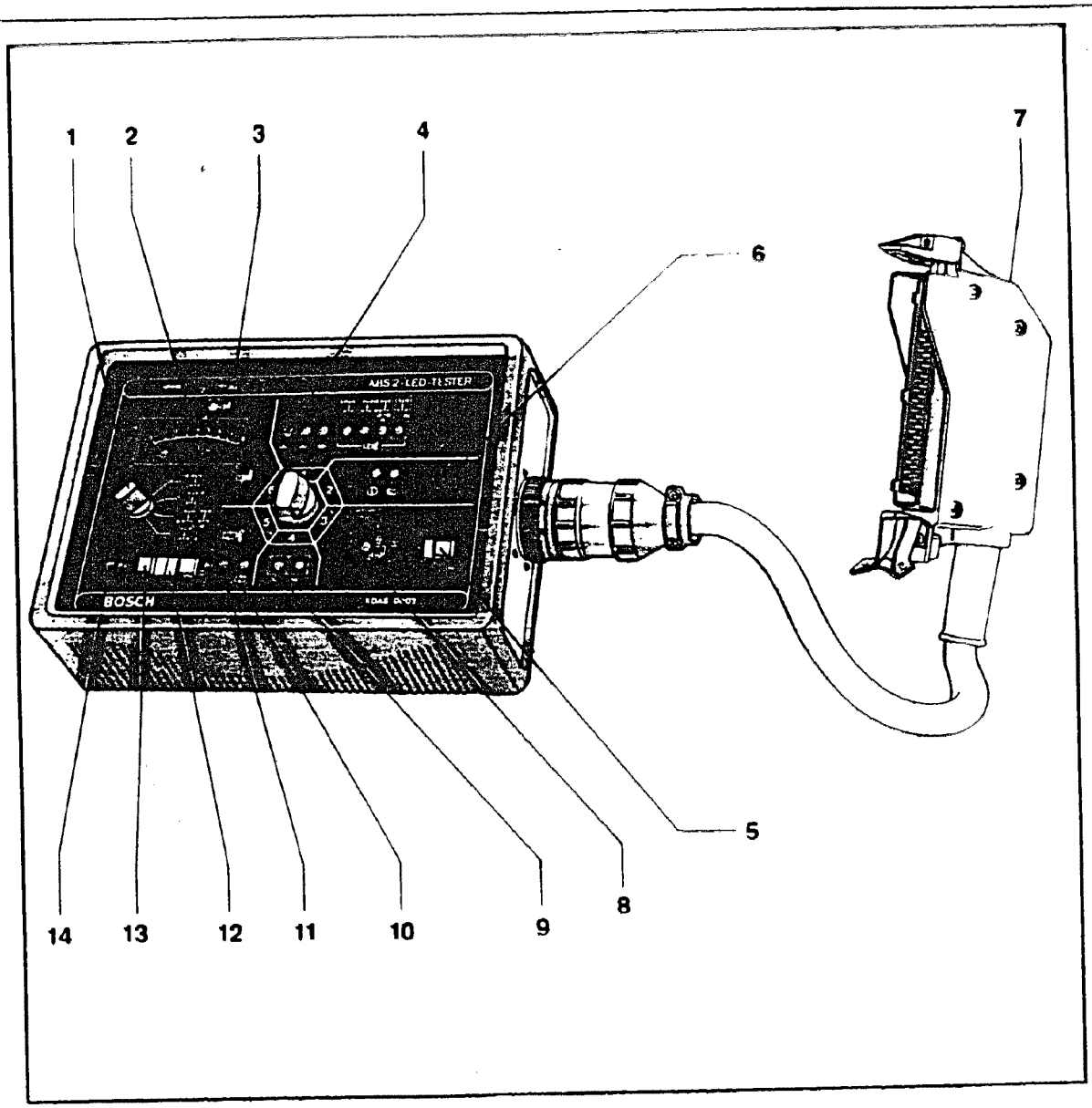

The Bosch ABS 2 LED-Tester will check the following:

- hydraulic modulator and relays
- wheel speed sensors
- warning light
- cable harness/connectors
- brake light switch signal
- alternator signal

The tester is not designed to check the electronic control unit.

Note

Certain steps of the test sequence require two technicians

1 — **Rotary switch**
used during program switch positions #5 and #6 to select the solenoid/wheel to be tested

2 — **Analog gauge**
used to check the operation of the selected wheel speed sensor

3 — **LED**
indicator for battery voltage

4 — **7 LEDS**
indicate the condition of: ground connections warning light diode internal resistance of solenoid valves OFF position of solenoid valve relay.

cardiagn.com

5 — **Push button**
used to operate return pump

6 — **2 LEDS**
monitor alternator connections and brake light switch connections

7 — **Adapter plug**
for connecting the tester to the ABS wiring harness in the vehicle

8 — **LED**
that monitors return pump operation

9 — **2 LEDs**
(Not Applicable)

10 — **LED**
monitors the ON position of the solenoid valve relay

11 — **LED**
indicates current availability for the pressure hold check of the selected solenoid valve

12 — **Pushbutton**
used during functional check of selected solenoid valve (pressure hold)

13 — **Pushbutton**
used during functional check of selected solenoid valve (pressure reduction)

14 — **LED**
indicates current availability for the pressure reduction check of the selected solenoid valves

cardiagn.com

Program switch positions	Test of:	Additional steps:	Desired result:	If desired result is not obtained, go to page:
During Entire Test	Power supply	■ switch ignition **ON**	• LED stays lit	45 19
1	Grounds Warning light diode Solenoid valves internal resistance Solenoid valve relay **OFF** position	■ switch ignition **ON**	2 wheel drive • all seven LEDs stay lit 4 wheel drive • six LEDs stay lit (all LEDs except the one inside the dashed lines)	45 20 & 45 21
2	Alternator voltage Stop lamp switch	■ switch ignition **ON** ■ start engine, let engine idle ■ switch ignition **ON** ■ operate brake pedal	• LED lights up • LED goes out • LED lights up • LED goes out each time brake pedal is depressed	45 24
3	Return pump motor relay Return pump	■ ignition **ON** ■ depress pushbutton ■ release pushbutton	• LED lights up • the pump motor runs • LED continues to stay lit for a few seconds after the pushbutton is released	45.25
4	Longitudinal acceleration sensor aL (only on vehicles so equipped)	■ switch ignition **ON**	• LED lights up aL	• acceleration sensor defective ■ replace

cardiagn.com

Program switch positions	Test of:	Additional steps:	Desired result:	If desired result is not obtained, go to page:
5	Relay for solenoid valves	■ switch ignition **ON** ■ lift vehicle ■ put the transmission in neutral with the handbrake released ■ set the wheel selector switch to the wheel to be tested first	• LED ⊂⊃ lights up and must stay lit constantly as long as program switch is in position #5	45.27
	Solenoid valve maintain pressure function	■ depress 'P =' pushbutton and hold ■ depress brake pedal	• LED 'P –' lights up • LED 'P =' stays lit test wheel should now be able to be rotated by hand using second person	
	(Requires 2 people)	■ release 'P =' pushbutton while keeping brake pedal depressed "Do not release the brake pedal"	• LED 'P =' goes out and the test wheel locks up and cannot be rotated	
	Solenoid valve reduce pressure function (Requires 2 people)	■ depress 'P▼' pushbutton while keeping the brake pedal depressed	• LED 'P▼' Lights Up Test wheel should now be able to rotate by hand using second person	
	The LED surrounded by the dashed line **IS NOT** used during Position #5 when testing the Quattro 3 channel system (4 wheel drive)	■ release 'P▼' pushbutton while keeping the brake pedal depressed ■ release brake pedal in between each wheel being tested Note Each channel must be tested separately and consecutively.	• LED 'P▼' goes out and the test wheel locks up and cannot be rotated	

Note

Vehicle wheels must be off the ground to perform steps 5 and 6. Carry out all testing consecutively for each wheel.

B-6

cardiagn.com

Program switch positions	Test of:	Additional steps:	Desired result:	If desired result is not obtained, go to page:
6	Wheel Speed Sensors The LED surrounded by the dashed line **IS** used during Position #6 when testing any Audi ABS system	■ put the transmission in neutral with the handbrake released ■ set the wheel selector switch to the wheel to be tested first Note When testing the driven axle, the wheel **NOT** being tested must be held still	■ turn the wheel by hand until the LED above the analog gauge lights up without flickering (speed approximately 1 revolution per second) The reading must be greater than 0.8 Note Each sensor must be tested separately	45.28 - 45.29

Final check:
- assemble system
- start engine; anti-lock indicator light in vehicle must go out
- while the engine is running, acutate switch for anti-lock; indicator light in vehicle must come on
- switch off engine and start it again; anti-lock indicator light must go out
- drive vehicle at a speed above 20 mph (30 kph); anti-lock indicator must not come on
- if the center and/or rear differential lock is engaged, the ABS indicator light must come on (Quattro only)

If the ABS system does not function properly at the conclusion of the test procedure, replace the control unit and test drive the vehicle.

cardiagn.com

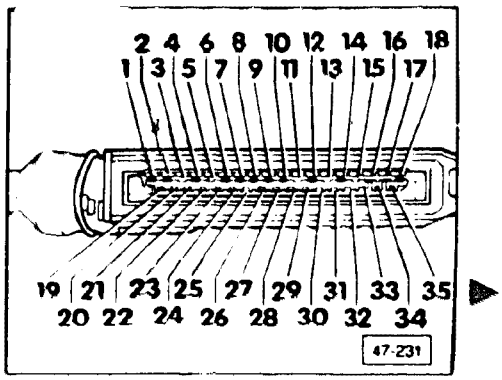

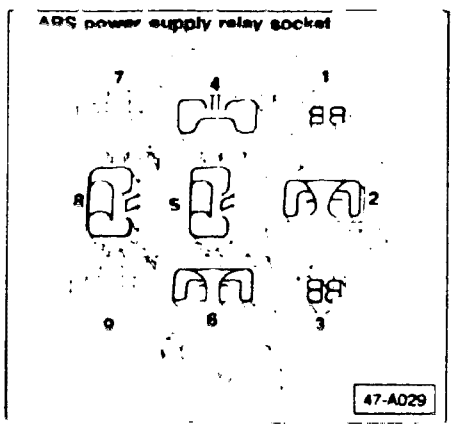

LED ◯ ▭ **not lit**

- check these first
  - battery is fully charged
  - fuses **#3** and **#12** on the fuse/relay panel are **OK**
  - fuse on top of the anti-lock power supply relay is **OK**
- check for continuity between terminal **20** on the ABS control unit connector and ground at battery ground strap
- switch ignition **OFF**
- check continuity of the wire between terminal **10** of the ABS control unit connector and ground
- check for battery voltage between terminals **1** and **10** of ABS control unit plug
  - approximately battery voltage

If **NOT OK,**
- remove anti-lock power supply relay
- check for battery voltage between contacts **2** and **4** and contacts **5** and **4**

If **NOT OK,**
- repair wiring
- connect voltmeter between contacts **8** and **4**
- press and hold the anti-lock switch
  - approximately battery voltage

If **NOT OK,**
- repair wiring or replace ABS switch and recheck

more

cardiagn.com

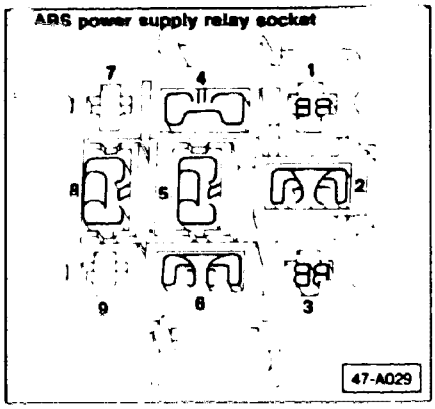

LED ◯ [+] not in (on Quattro models)

- connect voltmeter between contacts 1 and 5 of power supply relay socket
- lock rear differential
  - approximately battery voltage
- unlock rear differential
  - 0.0 volts

If **NOT OK**

- repair wiring or replace differential lock switch
- install ABS power supply relay

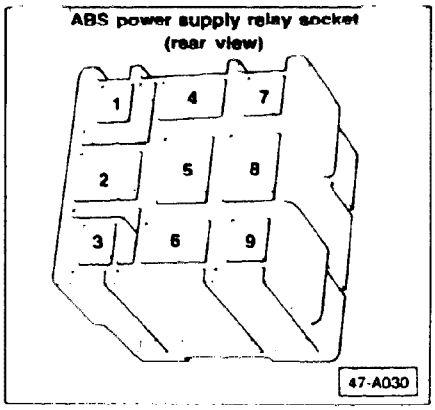

- check for voltage between contacts 6 and 4 on back of relay socket
  - approximately battery voltage

If **NOT OK**

- replace ABS power supply relay and recheck

LED ⊥ does not light (tester in 'Position 1')

Note

Weaker illumination of an LED indicates a contact resistance in the corresponding current path.

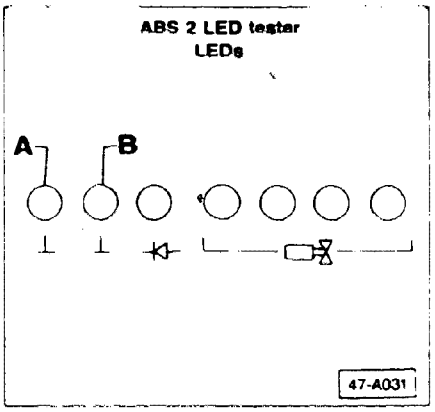

- check for continuity between terminal 34 of ABS control unit plug and ground connection at battery ground strap (LED **A**)
- check for continuity between terminal 10 of ABS control unit plug and ground connection at battery ground strap (LED **B**)

If **NOT OK**

- repair wiring as necessary

cardiagn.com

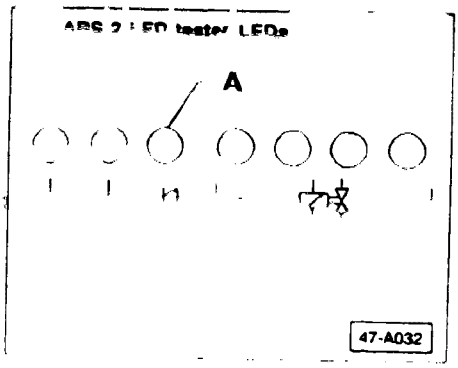

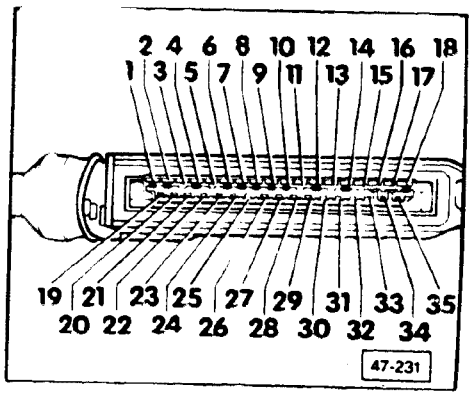

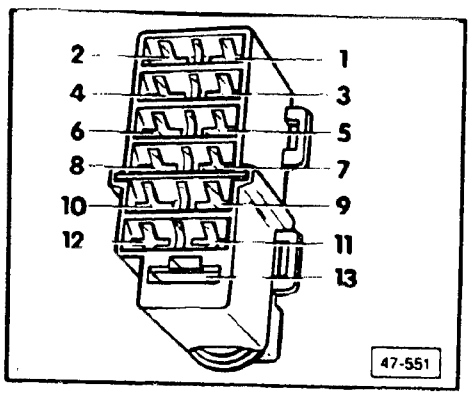

Black hydraulic modulator connector

LED ⊣⊢ does not light (tester in 'Position 1')

- check continuity between terminal **32** of ABS control unit connector and terminal **12** of black hydaulic modulator connector (LED **A**)

If **NOT OK,**
- repair wiring as necessary
- check for continuity between terminal **20** of ABS control unit connector and ground connection at battery ground strap

If **NOT OK,**
- repair wiring as necessary

Note

If terminal **20** is disconnected, the battery LED will not be lit.

- check for defective ABS **ON/OFF** switch
- check for defective ABS **ON/OFF** switch wiring
- check ABS warning light bulb
- check warning light bulb diode

ABS warning light bulb diode, checking

- check continuity between terminal 10 of black hydraulic modulator connector and terminal **29** of the ABS control unit plug

If **NOT OK,**
- repair wiring as necessary
- measure for continuity and contact resistance both ways between male terminals **10** and **12** in the socket on top of the hydraulic modulator
  - ohmmeter must indicate continuity (K ohm reading) in one direction and no continuity in the other direction

Note

The diode is not replaceable. The hydraulic modulator must be replaced as a unit.

cardiagn.com

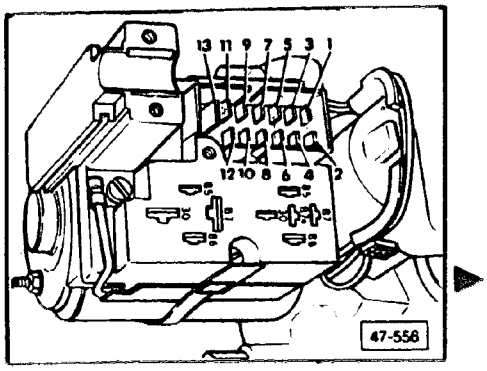

All LEDs and LED do not light up (tester in 'Position 1')

Solenoid valve relay, checking

- switch ignition **OFF**
- remove solenoid valve relay from hydraulic modulator
- measure continuity between terminals **87a** and **30**
  - 0 ohm
- measure resistance between terminals **85** and **86** of solenoid valve relay
  - approximately 70 to 120 ohms
- remove black connector from top of hydraulic modulator
- check for continuity between terminal **8** on connector and ground
- check for continuity between male terminal **8** of hydraulic modulator and terminal **87a** of the solenoid valve relay socket
- check for continuity between terminal **12** of the black hydraulic modulator connector and contact **32** of the ABS control unit connector .

If **NOT OK**
- repair wiring as necessary

If the above checks are **OK** and **LEDs DO NOT** light.
- replace solenoid valve relay

cardiagn.com

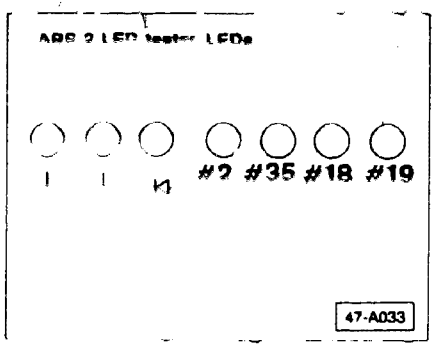

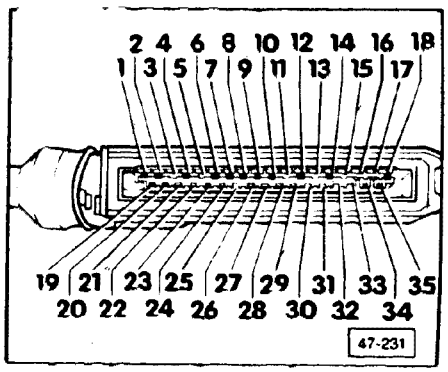

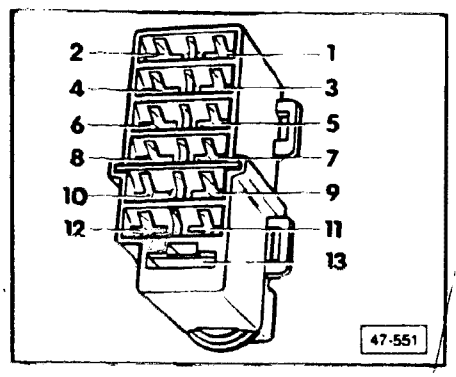

All LED does not light (tester in 'Position 1')

#2 LED out

- check for continuity between terminal **2** on ABS control unit connector and terminal **3** on black hydraulic modulator connector

If NOT OK,
- repair wiring as necessary

#35 LED out

- check for continuity between terminal **35** on ABS control unit connector and terminal **5** on the black hydraulic modulator connector

If NOT OK,
- repair wiring as necessary

#13 LED out

- check for continuity between terminal **18** of ABS control unit connector and terminal **7** on the black hydraulic modulator connector

#19 LED out
(on 2 wheel drive models only)

- check for continuity between terminal **19** on ABS control unit connector and terminal **1** on black hydraulic modulator connector

If NOT OK,
- repair wiring as necessary

cardiagn.com

LED Ⓖ does not light (tester in 'Position 2')

- check for continuity between terminal **61** on back of the alternator and terminal **15** of the ABS control unit connector

If NOT OK,
- repair wiring as necessary

LED Ⓖ does not go out when engine is started

- check alternator output

LED does not light

- check for continuity between brake light switch terminal and terminal **25** on ABS control unit connector

If NOT OK,
- repair wiring as necessary

OR

- check for short circuit in brake light switch

LED does not go out when brake pedal is depressed

- check brake light switch adjustment
- check mechanical function of brake light switch

cardiagn.com

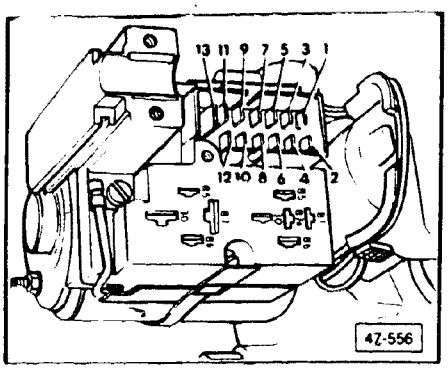

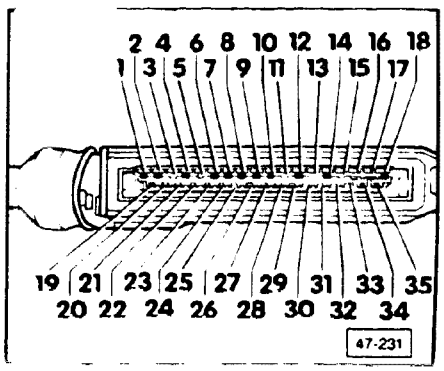

ABS return pump does not run (tester in 'Position 3')

- switch ignition **OFF**
- remove ABS return pump relay
- check for continuity between terminal **11** of the black hydraulic modulator connector and terminal **28** of the ABS control unit connector
- check for continuity between terminal **9** of the black hydraulic modulator connector and terminal **14** of the ABS control unit connector
- check for continuity between terminal **2** of the black hydraulic modulator connector and terminal **1** of the ABS control unit connector

- check for continuity between positive terminal on return pump motor and male terminal **9** on top of the hydraulic modulator
- switch ignition **ON**
- check voltage of terminal **2** and terminal **13** of the black hydraulic modulator connector
  - approximately battery voltage

If **NOT OK,**
- repair wiring as necessary

If all of above checks are correct and the return pump does not run,
- replace the return pump relay

cardiagn.com

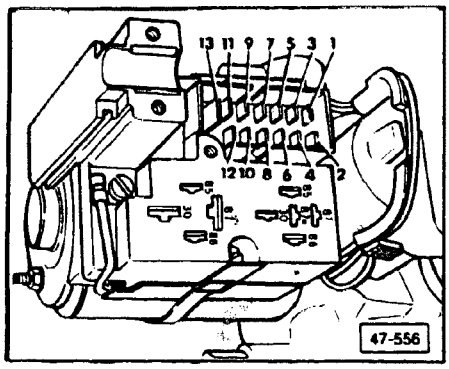

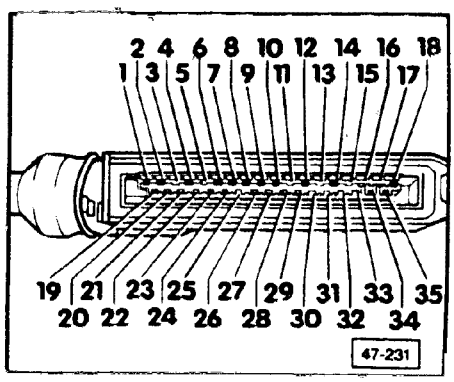

ABS return pump does not run (return pump relay is OK) (tester in 'Position 3')

- switch ignition **OFF**
- remove black hydraulic modulator connector

- check for continuity between male terminal **11** in the hydraulic modulator socket and terminal **85** in the return pump relay socket
- check for continuity between male terminal **13** in the hydraulic modulator socket and terminal **87** in the return pump relay socket
- check for continuity between male terminal **11** in the hydraulic modulator socket and terminal **28** of the ABS control unit connector

If **NOT OK,**
- repair wiring as necessary

If all of the above checks are correct and the return pump does not run,
- replace the hydraulic modulator

LED ⊡ does not light (tester in 'Position 5')

- check solenoid valve relay page (ABS book page 14)

cardiagn.com

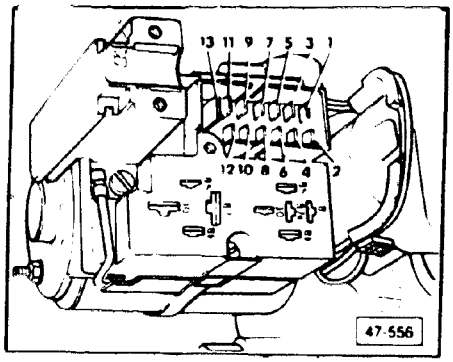

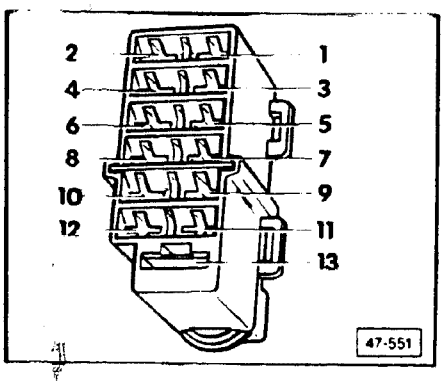

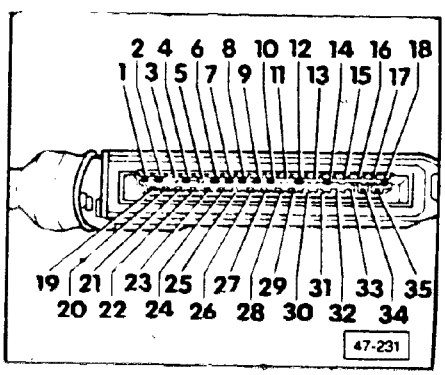

Solenoid valves do not work (solenoid valve relay is OK) (tester in 'Position 5')

- switch ignition **OFF**
- remove black hydraulic modulator connector
- measure voltage at terminal **4**
  - approximately battery voltage

- check for continuity between male terminal **4** in hydraulic modulator socket and terminal **87** in the socket for the solenoid valve relay
- check for continuity between male terminal **6** in hydraulic modulator socket and terminal **85** in the socket for the solenoid valve relay
- check for continuity between terminal **86** in the socket for the solenoid valve relay and terminal **86** in the socket for the return pump relay
- check for continuity between terminal **86** in the solenoid valve relay socket and male terminal **2** in the socket on top of hydraulic modulator
- check for continuity between terminal **6** of black hydraulic modulator connector and terminal **27** of ABS control unit connector

- switch ignition **ON**
- measure voltage at terminal **2** of black hydraulic modulator connector
  - approximately battery voltage

If **NOT OK,**
- repair wiring as necessary

If all of above checks are correct and the solenoids do not function,
- replace hydraulic modulator

cardiagn.com

Wrong solenoid valve operates (tester in 'Position 5')

- check for proper connections of brake lines to hydraulic modulator
- using Wiring Diagram, check for proper wiring between hydraulic modulator and the ABS control unit

LED ○ flashes off and on (selector in 'Position 6')

Wheel tested is being turned too fast or too slow

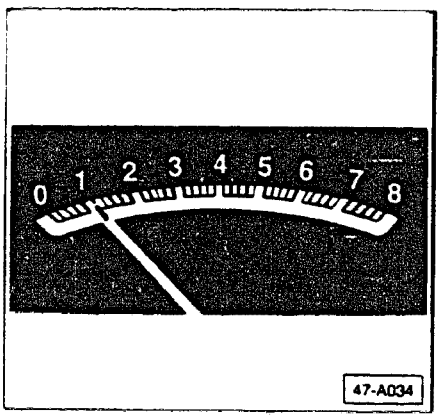

Sensor signal on test meter is not above minimum value

- check for excessive air gap between wheel speed sensor and ring gear
- check for loose or defective ring gear
- check for excessive wheel bearing play

cardiagn.com

No response from selected sensor (tester in 'Position 6')

- switch ignition **OFF**
- disconnect wheel speed sensor connector of sensor to be tested

Note

Front sensor plug connectors are located under the front hood near the shock towers. Rear sensor plug connectors are located under the rear seat cushion.

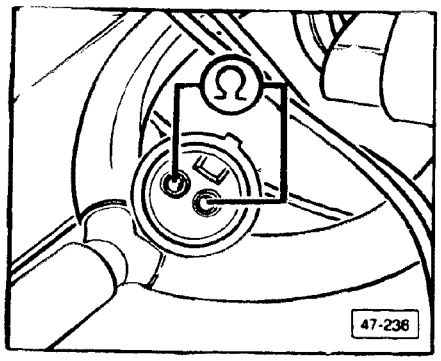

- connector ohmmeter to female terminals measure resistance of speed sensor
  - 0.8K ohms to 1.8K ohms

If **NOT OK**
- replace wheel speed sensor

If **OK,**
- check for continuity between wheel speed sensor and ABS control unit connector

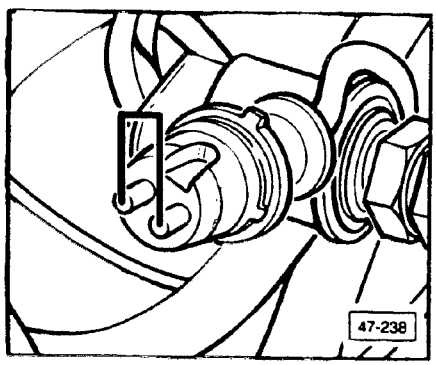

- bridge the male terminals of the wheel speed sensor connector
- remove ABS control unit connector
- check for continuity between wheel speed sensor you bridged and corresponding terminals of ABS control unit connector

If **NOT OK,**
- repair wiring as necessary

cardiagn.com

Index

Brake booster
- assembly 46.18

Brake noise
- eliminating 46.17a

Brake pedal clevis
- adjusting 46.19

Clutch pedal clevis
- adjusting 46.19

Front brakes (Girling caliper)
- assembly 46.3
- assembly (Coupe) 46.3a
- checking pads 46.4
- replacing pads 46.7

Front brakes (Teves caliper)
- assembly 46.6
- checking pads 46.7
- replacing pads 46.7

Parking brake
- assembly 46.20
- adjusting 46.21
- removing 46.22

Pedal cluster
- assembly 46.18

Rear brakes (Girling caliper)
- assembly 46.9
- basic setting 46.12
- basic setting, Quattro 46.14
- checking pads 46.10
- replacing pads 46.10
- replacing pads, Quattro 46.13

Technical data
- chart 46.2

cardiagn.com

Technical data

2 Wheel Drive

Engine type	4-cyl/5-cyl	
Master cylinder diameter	22.2mm	
Brake booster diameter	9"	
Amount of brake fluid (approx.)	0.6 liter	
	Front	**Rear**
Brake caliper piston diameter	54mm	36mm
Brake disc diameter	256mm	245mm
Brake disc thickness	22mm	10mm
Pad thickness	14mm	12mm
Pad surface of 4 pads	200cm²	120cm²

All Wheel Drive

Engine type	**5 cylinder**	
Master cylinder diameter	22.2 mm for 136 hp engine 23.81 mm for 170 hp engine 25.4 mm coupe only	
Brake booster diameter	9" for 136 hp engine	
Hydraulic brake servo piston diameter	24 mm for 170 hp engine	
Amount of brake fluid (approx.)	0.6 liter	
	Front	**Rear**
Brake caliper piston diameter	54 mm 40/45 mm (coupe only)	36 mm 38 mm from VIN 89 JA 225 957 38 mm for 170 hp engine
Brake disc diameter	256 mm 276 mm (coupe only)	245 mm
Brake disc thickness	22 mm 25 mm (coupe only)	10 mm
Pad thickness	14 mm 13 mm (coupe only)	12 mm
Pad surface of 4 pads	194 cm² 224 cm² (coupe only)	108 cm²

cardiagn.com

Note

Install complete repair kit

CAUTION

Machine discs on both sides — never on one side only. Always check condition and thickness of brake pads.

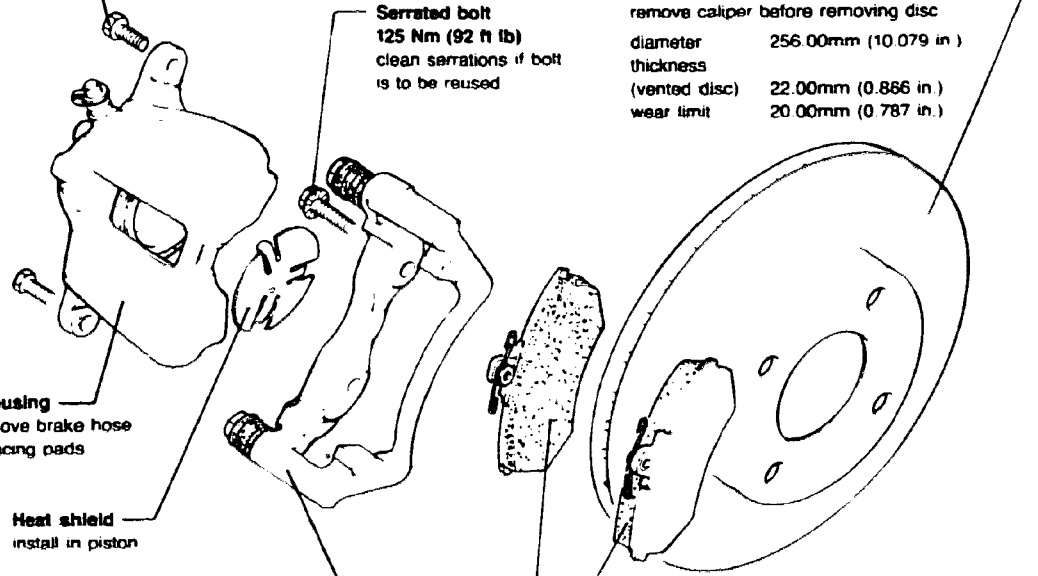

35 Nm (25 ft lb)
always replace
hold guide pin when loosening and tightening

Serrated bolt
125 Nm (92 ft lb)
clean serrations if bolt is to be reused

Brake disc
replace both discs together
remove caliper before removing disc

diameter	256.00mm (10.079 in.)
thickness (vented disc)	22.00mm (0.866 in.)
wear limit	20.00mm (0.787 in.)

Caliper housing
do not remove brake hose when replacing pads

Heat shield
install in piston

Brake pad carrier
supplied as a replacement part
assembled with sufficient grease on guide pins
if protective caps are damaged, install repair kit,
Part No. 443 698 470

Brake pads
always replace pads in complete sets (both wheels)

thickness (new)	14.00mm (0.511 in.)
wear limit	2.00mm (0.078 in.)
(with backing plate)	7.00mm (0.275 in.)

46-625

cardiagn.com

Caliper housing
DO NOT disconnect
brake hose
when replacing pads
use caliper press and
old brake pad to
push pistons in

Brake pad carrier
supplied as replacement
part assembled
with sufficient grease
on guide bolts
if cap is damaged
install repair kit.
Part No. 443 698 470

Brake disc
always replace on both sides
remove caliper to remove disc

diameter: 276.0 mm (10.866 in.)
thickness: 25.0 mm (0.984 in.)
wear limit: 23.0 mm (0.906 in.)

125 Nm (92 ft lb)

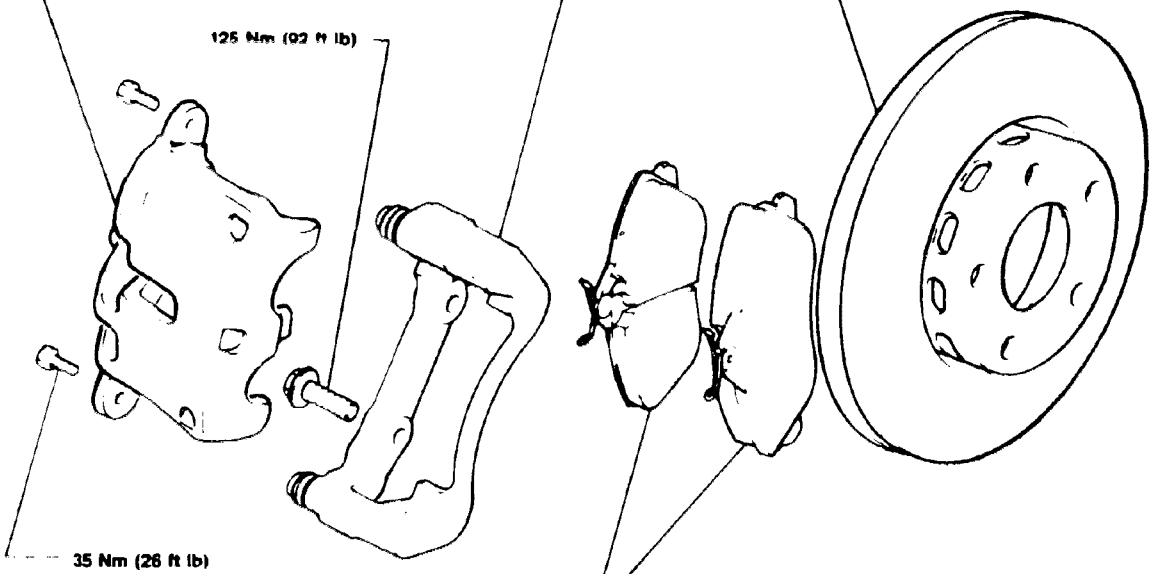

35 Nm (26 ft lb)
always replace
when loosening/tightening
hold guide bolt

Brake pads
always replace in complete
sets (both sides)
after replacing pads,
depress brake pedal
several times with
vehicle stationary

thickness (new):	13.0 mm (0.511 in.)
wear limit:	2.0 mm (0.078 in.)
wear limit including backing plate:	7.0 mm (0.275 in.)

Note

Install all parts in repair kit

CAUTION

Disc machining must be performed on both sides of disc — never on one side only
Always check condition/thickness of brake pads.

46-697

cardiagn.com

Pad thickness, checking

- visually check thickness of outer pads through hole in wheel rim (use a flashlight if necessary)
- if pad thickness is 7mm or less (including backing plate), the pads have reached their wear limit and must be replaced

Brake pads, replacing

- remove wheels

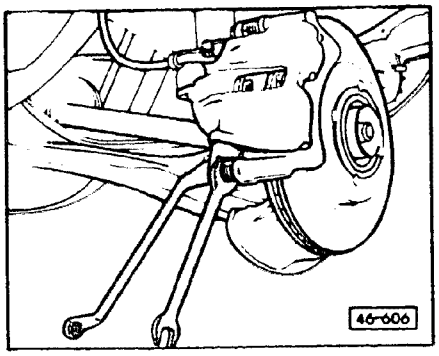

CAUTION

When re-using brake pads, mark to prevent changing inside to outside or from one caliper to another.

- remove lower caliper mounting bolt (hold guide pin with open end wrench while loosening)

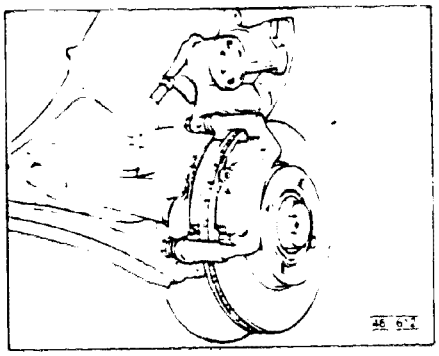

- swing brake caliper up and remove brake pads

cardiagn.com

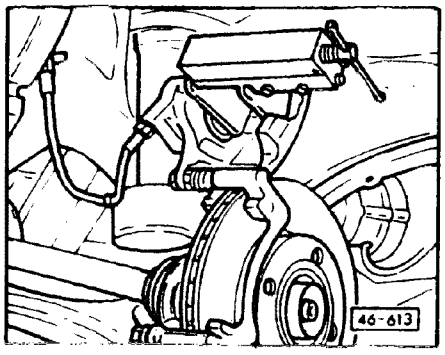

- push piston into caliper housing

CAUTION

Always remove some brake fluid from the reservoir before installing new brake pads. When the caliper piston is pushed back, fluid is forced out of the caliper and into the reservoir. After pads are installed, refill the reservoir only to the **MAX** mark.

- install brake pads and heat shield
- swing brake caliper down and tighten new caliper securing bolts to 35 Nm (25 ft lb)

Note

Depress brake pedal firmly several times while vehicle is stationary to permit piston and brake pads to adjust to brake disc.

cardiagn.com

CAUTION

Disc machining must be performed on both sides of disc — never on one side only. Always check condition and thickness of brake pads.

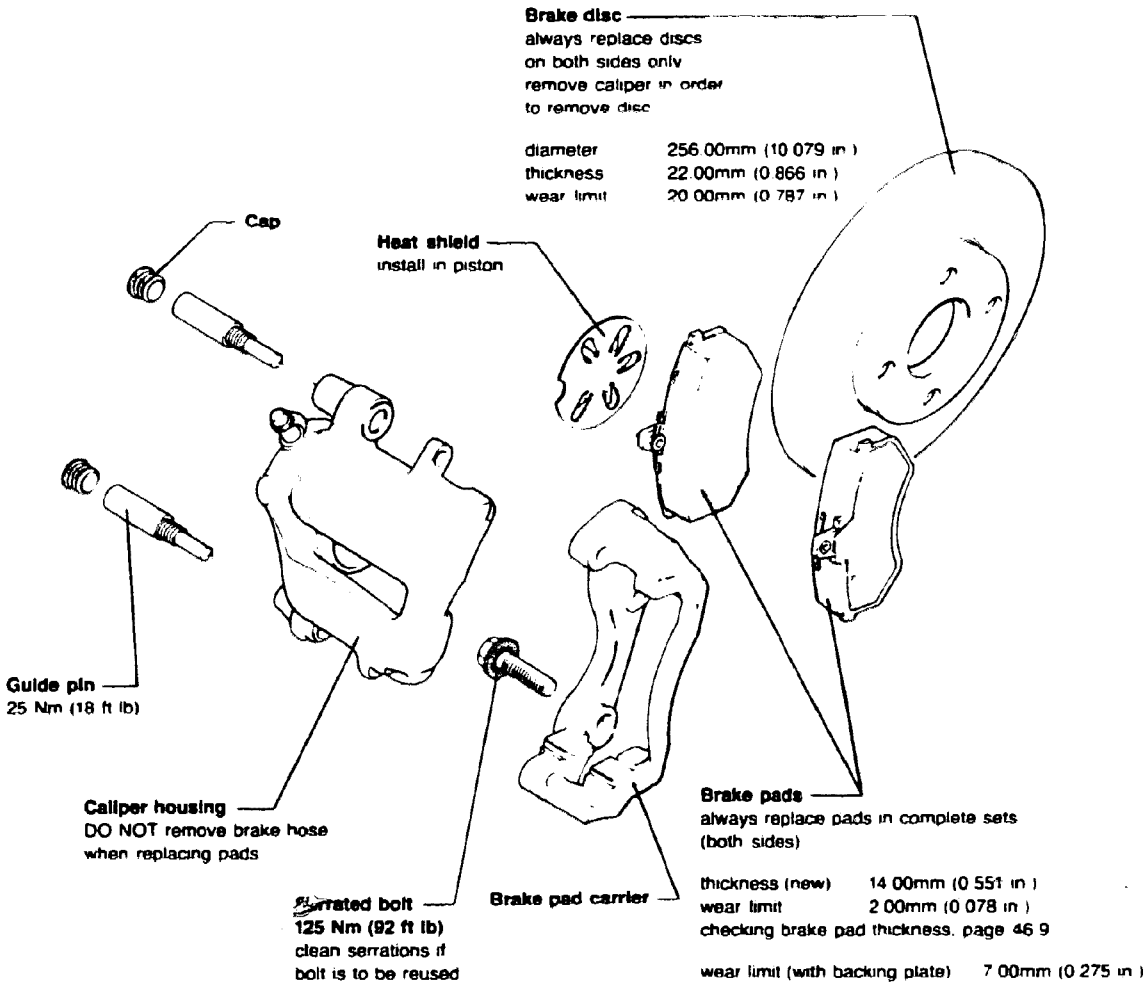

46-659

Note

Two self-locking bolts contained in the repair kit are not required on Teves brakes. Otherwise, install the complete repair kit.

C-7

cardiagn.com

Brake pad thickness, checking

- visually check thickness of outer pads through hole in wheel rim (use a flashlight if necessary)
- if pad thickness is 7mm or less (including backing plate), the pads have reached their wear limit and must be replaced

Brake pads, replacing

- remove wheels

CAUTION

When re-using brake pads, mark to prevent changing inside pads to outside or from one caliper to another.

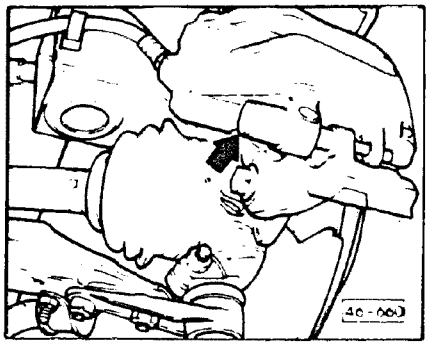

- remove guide pin caps (**arrow**)

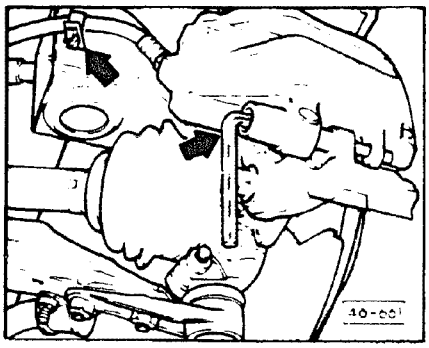

- remove both guide pins (**lower arrow**)
- remove brake hose clip from bracket on wheel bearing housing (**upper arrow**)

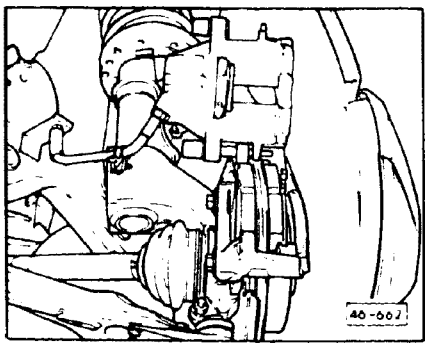

- swing brake caliper up and hold in position
- remove brake pads
- check correct location of heat shield in piston

cardiagn.com

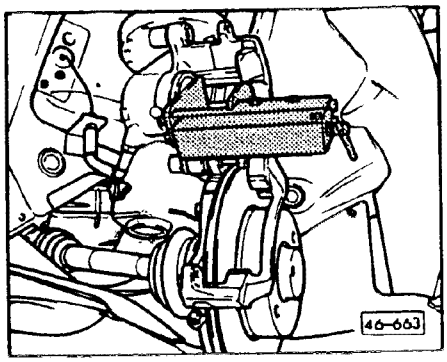

- push piston back into caliper housing

CAUTION

Always remove some brake fluid from reservoir before installing new brake pads. When caliper piston is pushed back, fluid is forced out of caliper and into reservoir. After pads are installed, refill reservoir only to **MAX** mark.

- install brake pads
- tighten brake caliper housing guide pins to 25 Nm (18 ft lb)
- install guide pin caps
- install brake hose clip in bracket on wheel bearing housing

Note

The repair kit contains two self-locking bolts which are not required with the Teves brakes.

Depress brake pedal firmly several times while vehicle is stationary to permit piston and brake pads to adjust to brake disc.

cardiagn.com

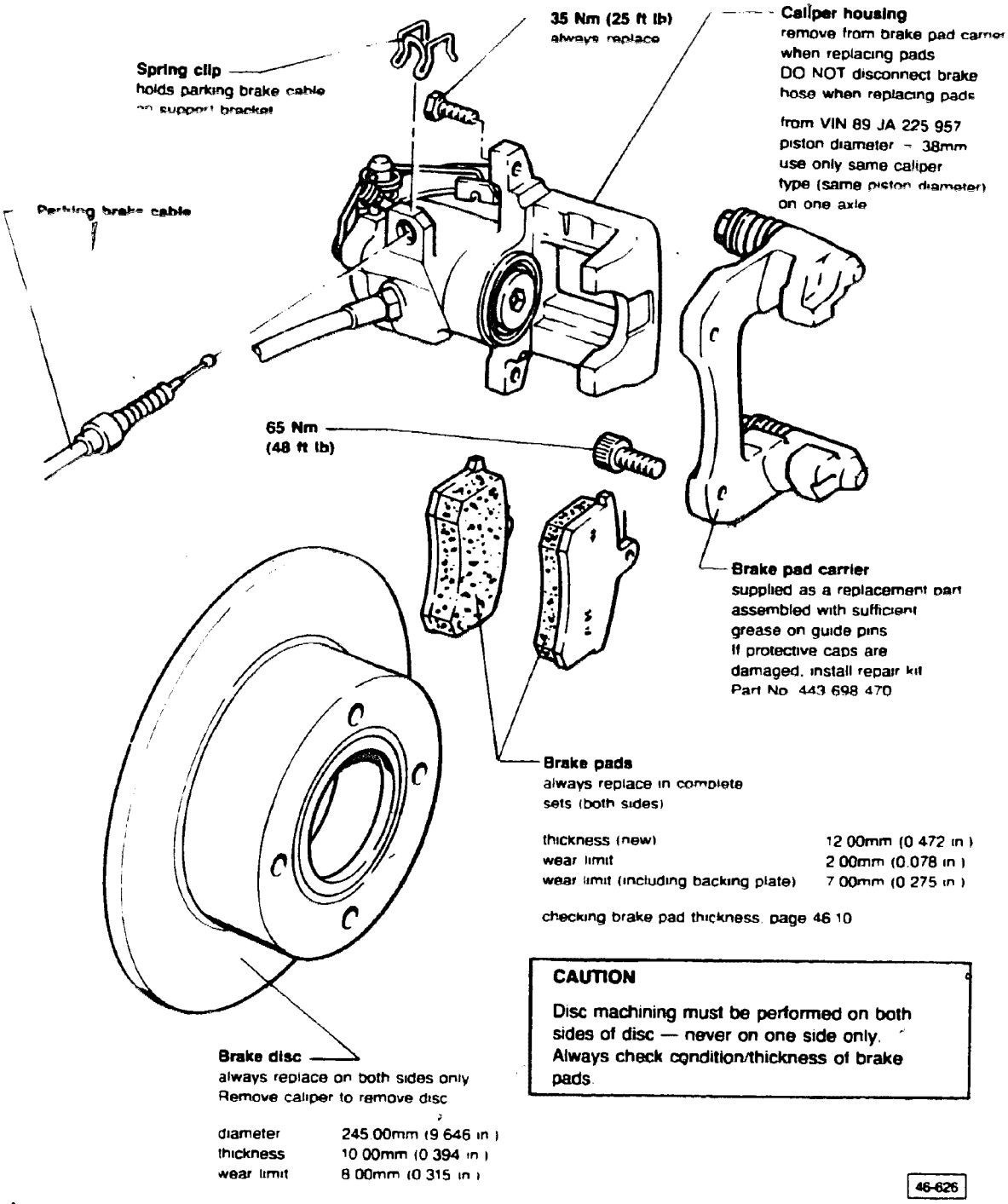

Note

Install all parts supplied in repair kit.

cardiagn.com

Brake pad thickness, checking

- visually check thickness of outer pads through hole in wheel rim (use a flashlight if necessary)
- if pad thickness is 7mm or less (including backing plate), the pads have reached their wear limit and must be replaced

Brake pads, replacing

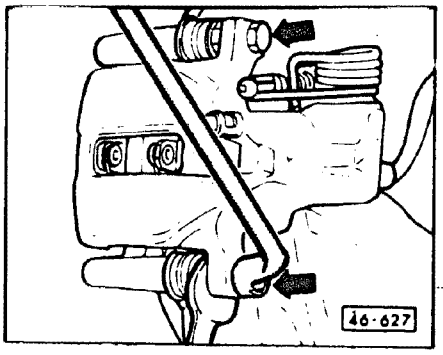

- remove rear wheels

> **CAUTION**
>
> When re-using brake pads, mark them to prevent changing from original position.

- remove brake caliper housing, (hold guide pin with open end wrench while loosening bolts)
- remove brake pads

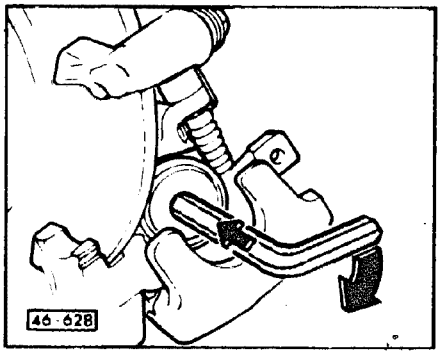

> **CAUTION**
>
> Always remove some brake fluid from reservoir before installing new brake pads. When caliper piston is turned in, brake fluid is forced out of the caliper and into reservoir. After pads are installed, refill reservoir only to **MAX** mark.

- screw piston into housing by turning it clockwise with a socket head wrench while pushing in firmly (**arrows**)

cardiagn.com

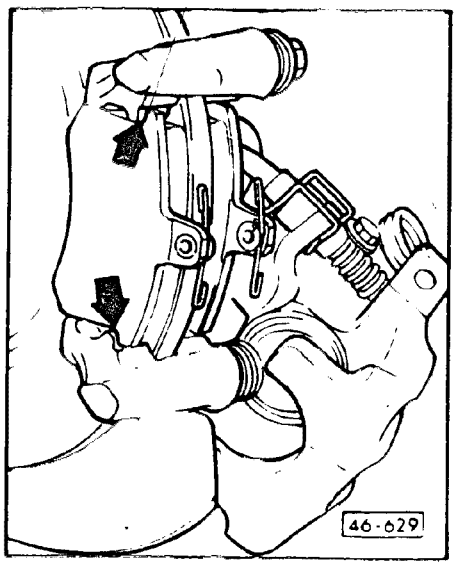

- install brake pads
- install caliper housing with new bolts and tighten to 35 Nm (25 ft lb)

Note

The repair kit contains four self-locking bolts which must always be installed

CAUTION

After installing new brake pads, always check basic setting of rear brakes.

cardiagn.com

Rear brake basic setting, checking

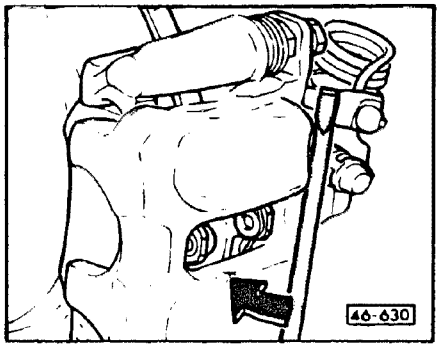

Note

Parking brake cable must be free of tension during basic setting check.

Work sequence

- use a screwdriver to push caliper lever against stop on both sides of vehicle

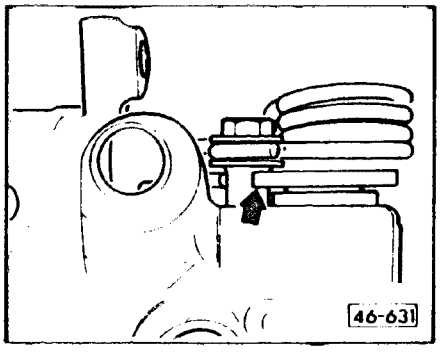

- parking brake cable is too tight if lever of opposite side caliper is pulled away from stop (**arrow**)

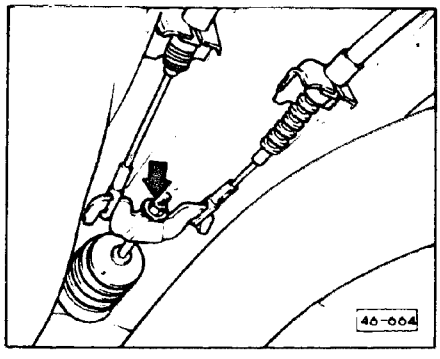

- loosen adjustment nut for parking brake cable (**arrow**) until both levers rest against stop

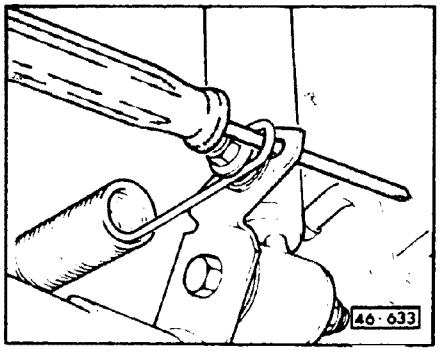

- push a screwdriver of at least 6mm dia. between rear hook of spring and roller
- pump brake pedal with moderate force about **40** times (engine not running)
- check that both wheels rotate freely
- remove screwdriver

cardiagn.com

Brake pads, replacing (Quattro only)

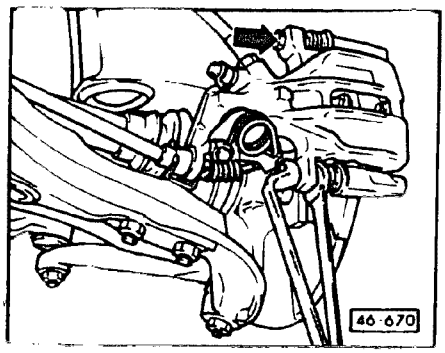

- remove rear wheels

> **CAUTION**
>
> When re-using brake pads, mark them to prevent changing from original position.

- remove brake caliper housing (hold guide pins with an open-end wrench while loosening bolts)
- remove brake pads

> **CAUTION**
>
> Always remove some brake fluid from reservoir before installing new brake pads. When caliper piston is turned in, brake fluid is forced out of the caliper and into reservoir. After pads are installed, refill reservoir only to **MAX** mark.

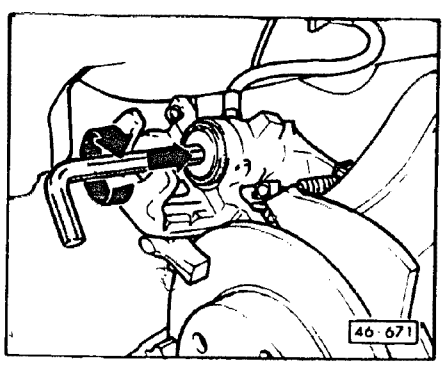

- screw piston into housing by turning it clockwise with a socket head wrench while pushing in firmly (**arrow**)

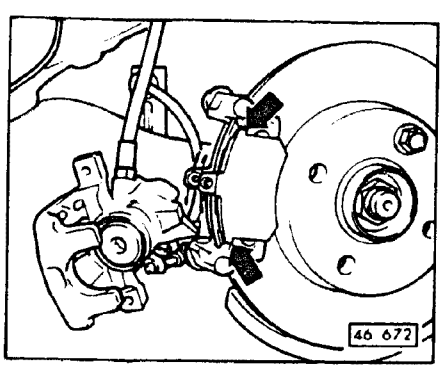

- install brake pads (**arrows**)
- install caliper housing with new bolts and tighten to 35 Nm (25 ft lb)

Note

The repair kit contains four self-locking bolts which must always be installed.

> **CAUTION**
>
> After installing new brake pads, always check basic setting of rear brakes.

C-14

cardiagn.com

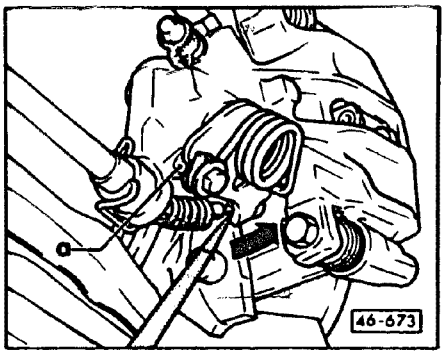

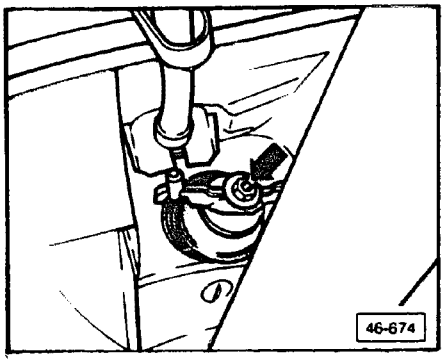

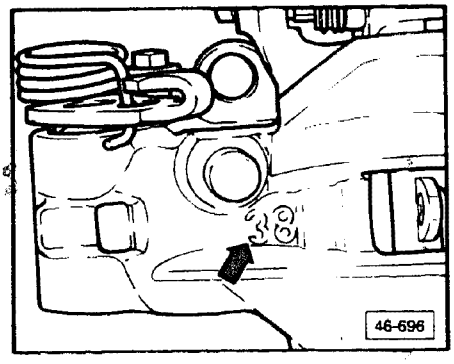

Rear brake basic setting, checking

Note

Parking brake cable must be free of tension during basic setting check.

- use a screwdriver to push caliper lever against stop **a** on both sides of vehicle
  - parking brake cable is too tight if lever of opposite side caliper is pulled away from stop

- loosen adjustment nut for parking brake cable (**arrow**) until both levers rest against stop

36mm caliper piston:
- pump brake pedal with moderate force about **40** times (engine not running)

38 mm caliper piston:
- press brake pedal **one** time
- check that both wheels rotate freely

> **CAUTION**
>
> Different caliper types are identified by raised number (**arrow**) indicating piston diameter (38 mm shown).

cardiagn.com

This page intentionally left blank

cardiagn.com

This page intentionally left blank

cardiagn.com

This page intentionally left blank

cardiagn.com

Brake noise

Brake noise is mainly the result of vibrations between components of the brake caliper assembly.

The following procedure has proven effective in reducing brake noise and eliminating customer complaints arising from noisy brakes.

Note

To achieve maximum effectiveness it is imperative that this procedure be followed in its entirety.

See page 4 — Brake discs, front and rear — before assembling brake components.

Front brake caliper

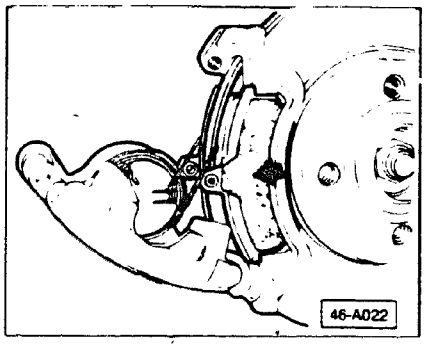

▶ Brake pads must have anti-vibration material (**arrow**). If not, replace pads with Part Number **443 698 151 F**

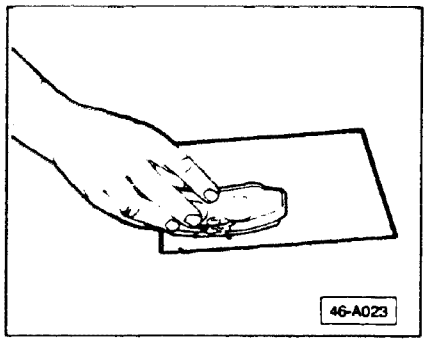

▶ ■ inspect pads, deglaze and clean face of pad with sandpaper if necessary

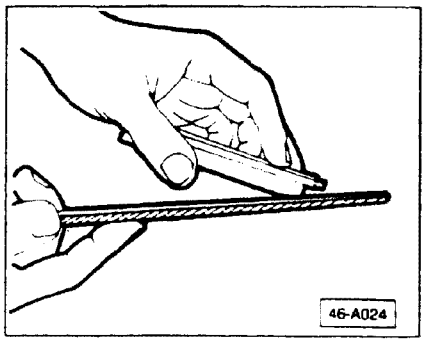

▶ ■ slightly chamfer (bevel) edges of brake pad material with file

more

C-19

cardiagn.com

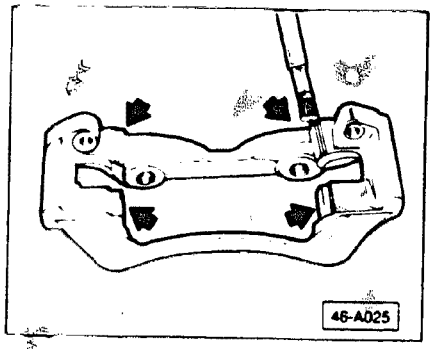

- clean brake pad carrier contact points (**arrows**) and apply high temperature grease. e.g Plastilube Moly 3*

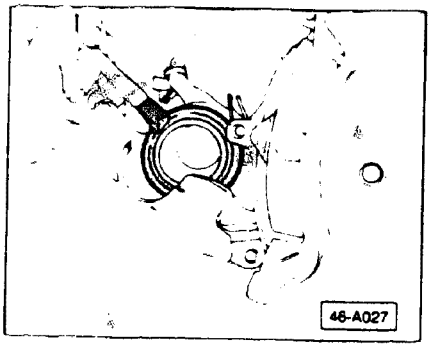

- clean and lubricate caliper piston with high temperature grease

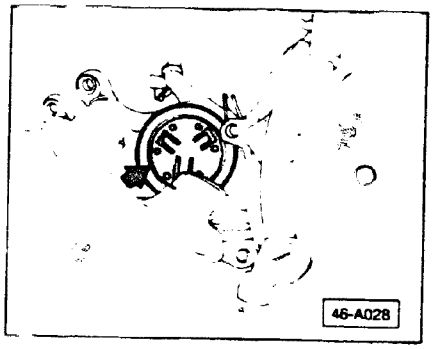

- install anti-knock shim (shim has six [6] indentations), chrome color, Part Number **443 615 231 A**, (**arrow**) into caliper piston (two required)
- apply thin coating of high temperature grease on surface of shim

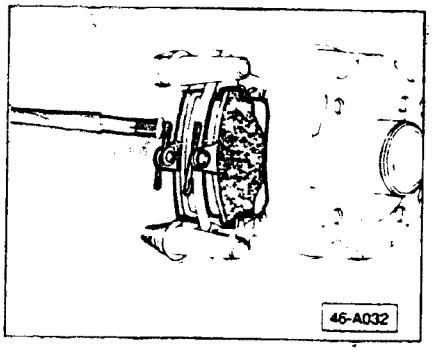

- apply small amount of high temperature grease to spring contact points when reassembling

more

cardiagn.com

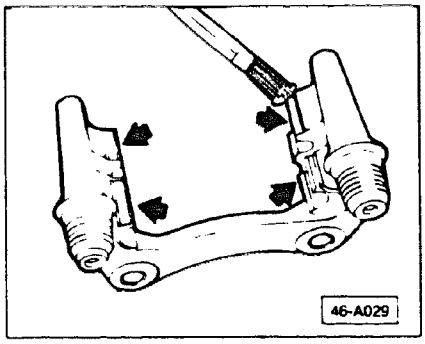

Rear brake caliper

- remove brake pad carriers and clean pad contact points (**arrows**)
- apply high temperature grease, e.g. Plastilube Moly 3* to pad contact points of pad carriers

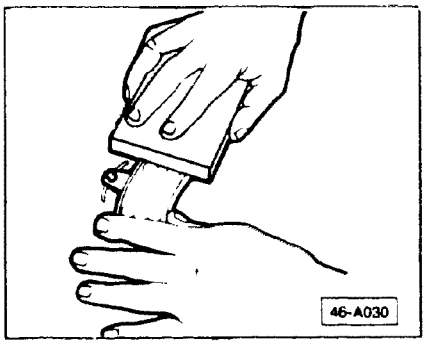

- remove paint on back of pads using sandpaper or wire brush

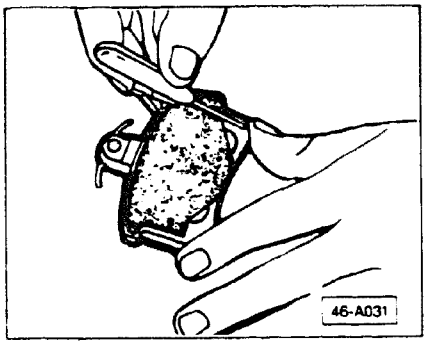

- install anti-vibration stickers, Part Number **171 698 993**, to backs of all four rear brake pads and trim to proper size
- deglaze face of pads with sandpaper, if necessary
- slightly chamfer (bevel) edges of brake pad material with file

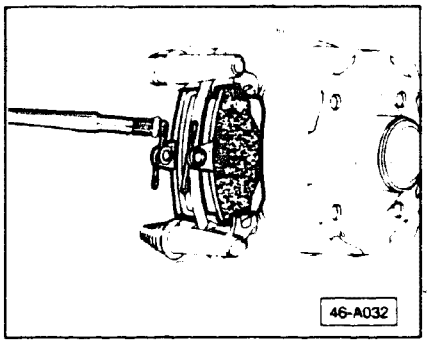

- install brake pads and lubricate spring contact points with high temperature grease

more

cardiagn.com

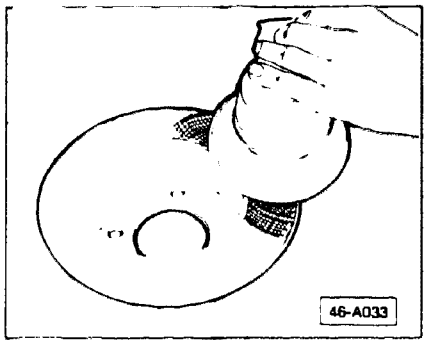

Brake discs, front and rear

Glazed discs must be cleaned using a power disc-type sander and 80 grit sandpaper. Sand brake discs to achieve a "cross-hatch" pattern:

- lightly sand in clockwise direction using leading edge of sanding disc

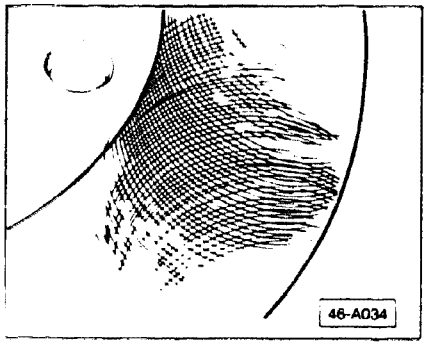

- continue to sand in clockwise direction using trailing edge of sanding disc

cardiagn.com

CONTINUED IN THE

BEGINNING OF NEXT ROW

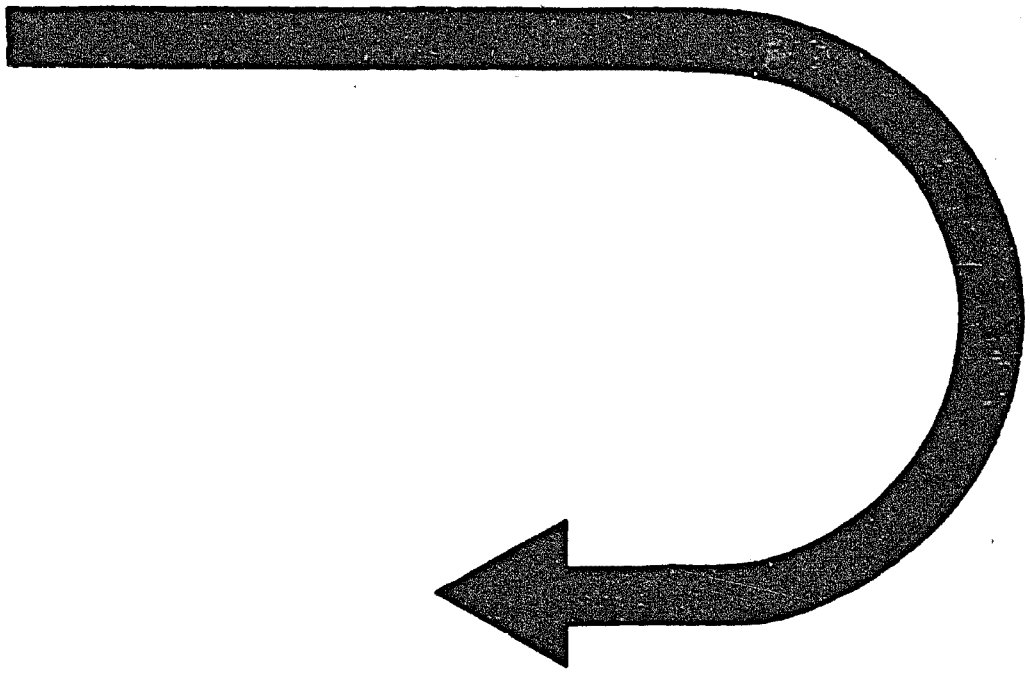

cardiagn.com

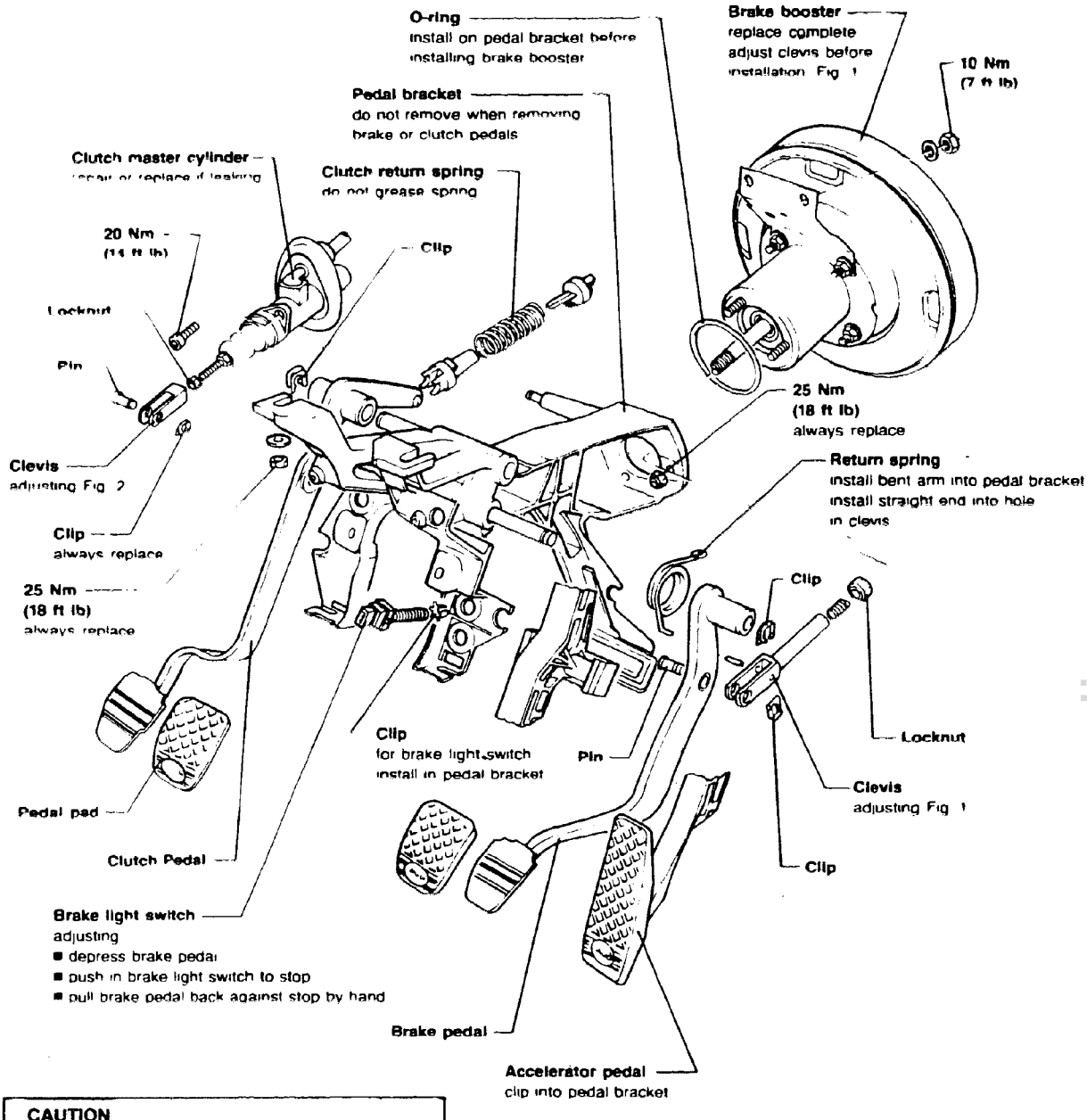

CAUTION

Always use new self-locking nuts and circlips.

WARNING

Do not install additional floor mats as they may interfere with pedal movement.

Note

Lubricate all pivot points with white grease.
Part No AOS 126 000 05, before assembling.

46-657

D-2

cardiagn.com

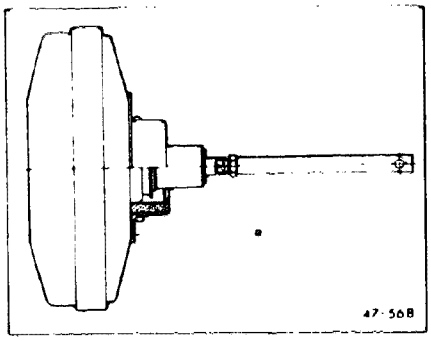

▶ **Fig. 1 Clevis, adjusting**

a = 269.0 + 0.5mm
(10.590 + 0.02 in.)

Note

When measuring, the push rod must be perpendicular to the surface of the brake booster

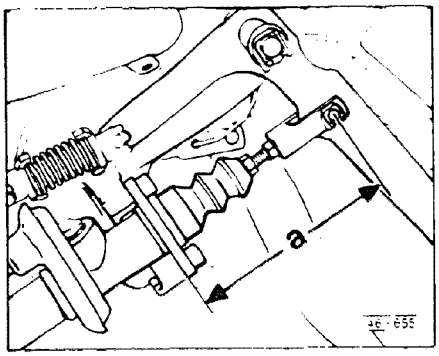

▶ **Fig. 2 Clevis, adjusting**

a = 116.0 + 0.2mm
(4.566 + 0.007 in.)

Note

If the clutch pedal does not return automatically although the clevis is correctly adjusted, it is possible that:

- air is in the hydraulic system
- the pedal bushing is tight

cardiagn.com

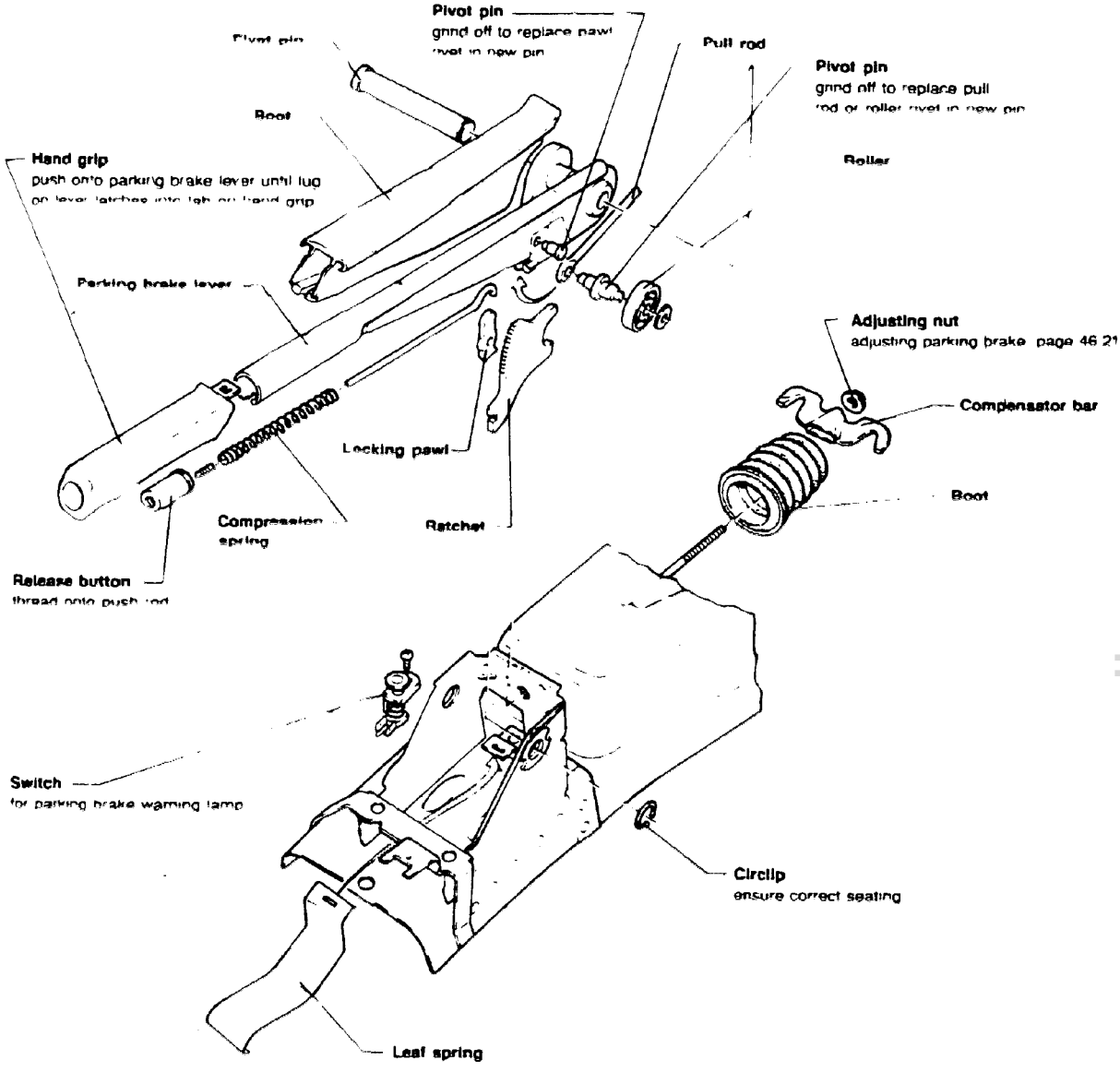

Note

Lubricate all contact areas with white grease.
Part No AOS 126 000 05 before assembling

46-656

D-4

cardiagn.com

Parking brake, adjusting

Because rear brakes are self-adjusting, you need to adjust only after replacing
- parking brake cables
- brake calipers
- discs
- pads

Always make basic adjustment on rear brakes first (see page 46 12 and page 46 14)

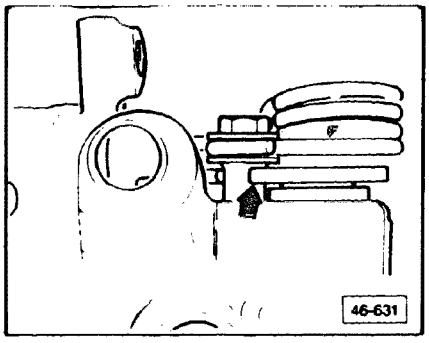

- tighten adjusting nut for parking brake cable until both levers (**arrow**) lift slightly off their stops (two mechanics required)

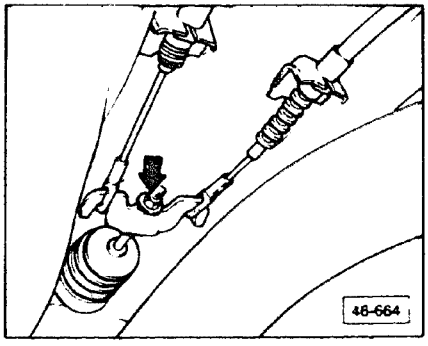

- turn adjusting nut (**arrow**) back two turns

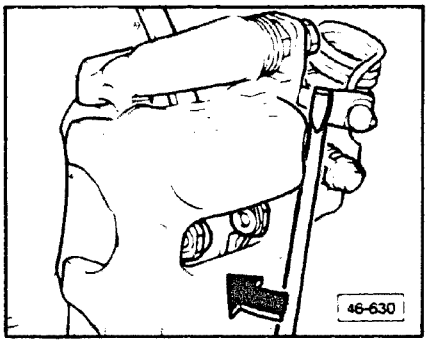

- using a screwdriver, press levers for parking brake cable alternately against stop
  - parking brake cable is too tight if the lever of the opposite brake caliper is pulled away from stop
- loosen adjustment nut for parking brake cable until both levers rest against stops
- pull up on parking brake and release
- check that both wheels rotate freely

D-5

cardiagn.com

Parking brake lever, removing

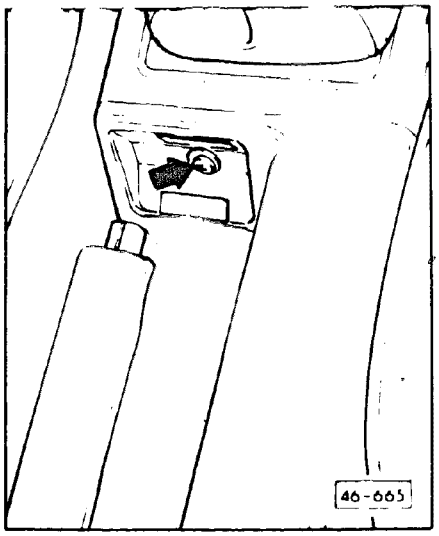

- remove parking brake lever boot
- remove screw (**arrow**)

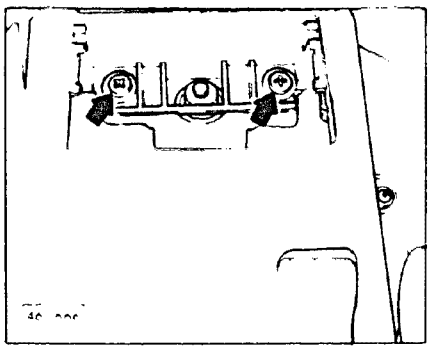

- remove ashtray
- remove screws (**arrows**)
- remove center console at rear

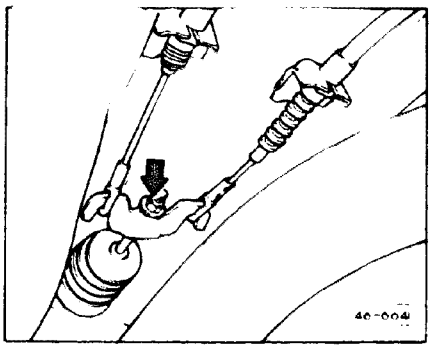

- remove adjusting nut (**arrow**)
- remove compensator bar
- remove boot

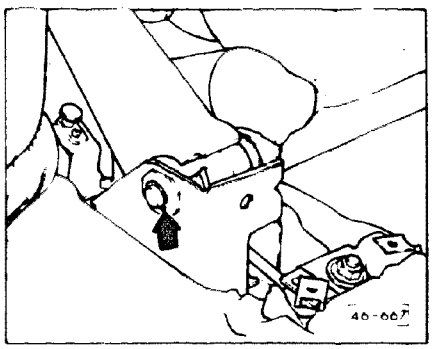

- remove circlip (**arrow**)
- push out pivot pin
- push parking brake lever slightly to rear and then remove

Note

After installing parking brake lever, adjust parking brake (see page 46.21).

D-6

cardiagn.com

Index

Brake booster
- assembly 47.16, 47.17
- checking 47.14

Brake fluid
- changing 47.15

Brake master cylinder
- assembly 47.16, 47.17
- clevis, adjusting 47.27

Brake proportioning valve
- checking 47.18

Brake pressure regulator (height sensitive)
- adjusting, 80 models 47.13
- adjusting, 90 models 47.13a
- checking 47.12

Brake system
- bleeding 47.14
- pre-bleeding caliper 47.9

Front brake caliper
- assembly, Girling 47.2
- assembly, Teves 47.5
- assembly, double piston (Coupe) 47.10

Rear brake caliper
- assembly, Girling 47.7

Brake master cylinder
- assembly 47.25
- clevis, adjusting 47.27

Hydraulic brake servo
- assembly 47.25
- checking 47.21

Hydraulic system
- assembly 47.19
- brake servo, checking 47.21
- changes from VIN 8B LA 006 861 47.18a
- pressure accumulator, checking 47.20
- pump delivery rate, checking 47.21

Pressure accumulator
- checking 47.20
- check valve, checking 47.22
- pressure relief valve, checking 47.23

cardiagn.com

Note

Use all parts supplied in repair kit when repairing.

> **CAUTION**
>
> Coat seals and pistons lightly with VW brake cylinder paste or equivalent before installing.

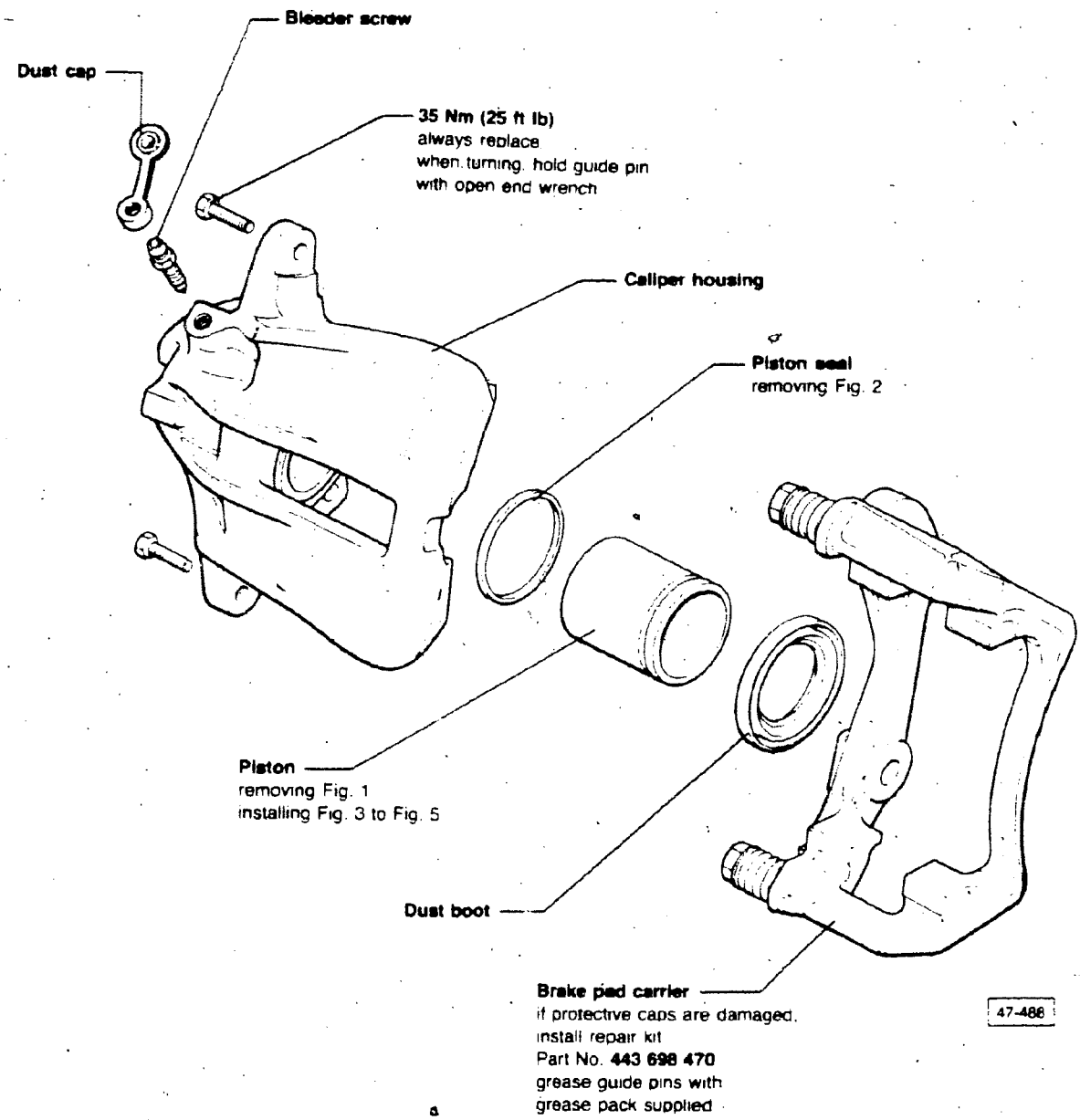

cardiagn.com

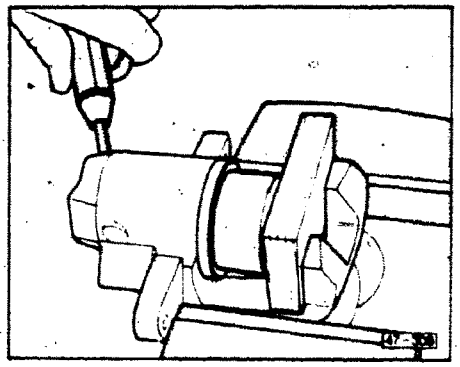

▶ **Fig. 1 Piston, removing**

> **CAUTION**
>
> Place a wooden block in the cylinder housing to prevent damage to the piston. Use only enough air pressure to force piston out.

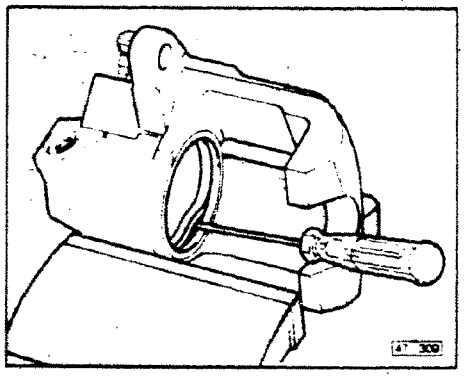

▶ **Fig. 2 Piston seal, removing**

- pry out carefully without damaging cylinder bore

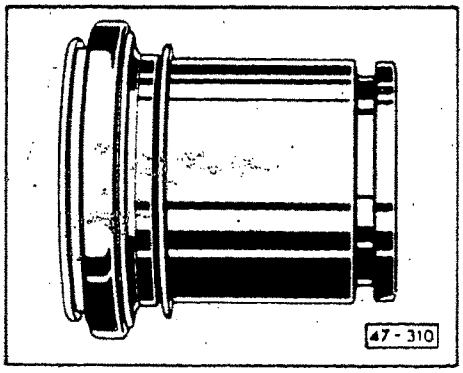

▶ **Fig. 3 Piston, installing**

- slide dust boot onto piston

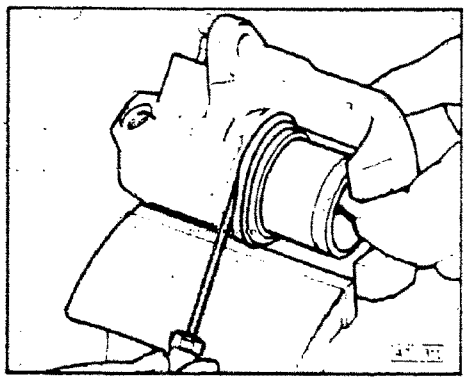

▶ **Fig. 4 Piston, installing**

- lubricate piston and cylinder bore lightly with brake cylinder paste
- install piston and insert inner lip of dust boot into groove in brake cylinder

cardiagn.com

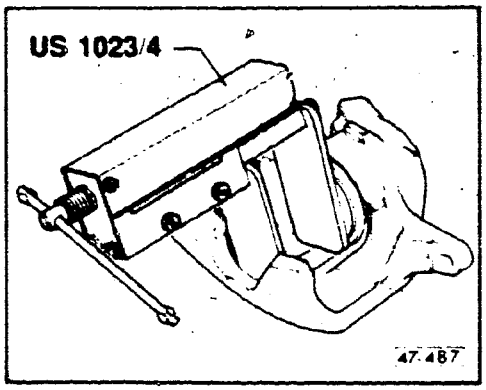

▶ **Fig. 5 Piston, installing**

- press piston in as far as it will go

CAUTION

Outer lip of dust boot must slip into groove in piston.

cardiagn.com

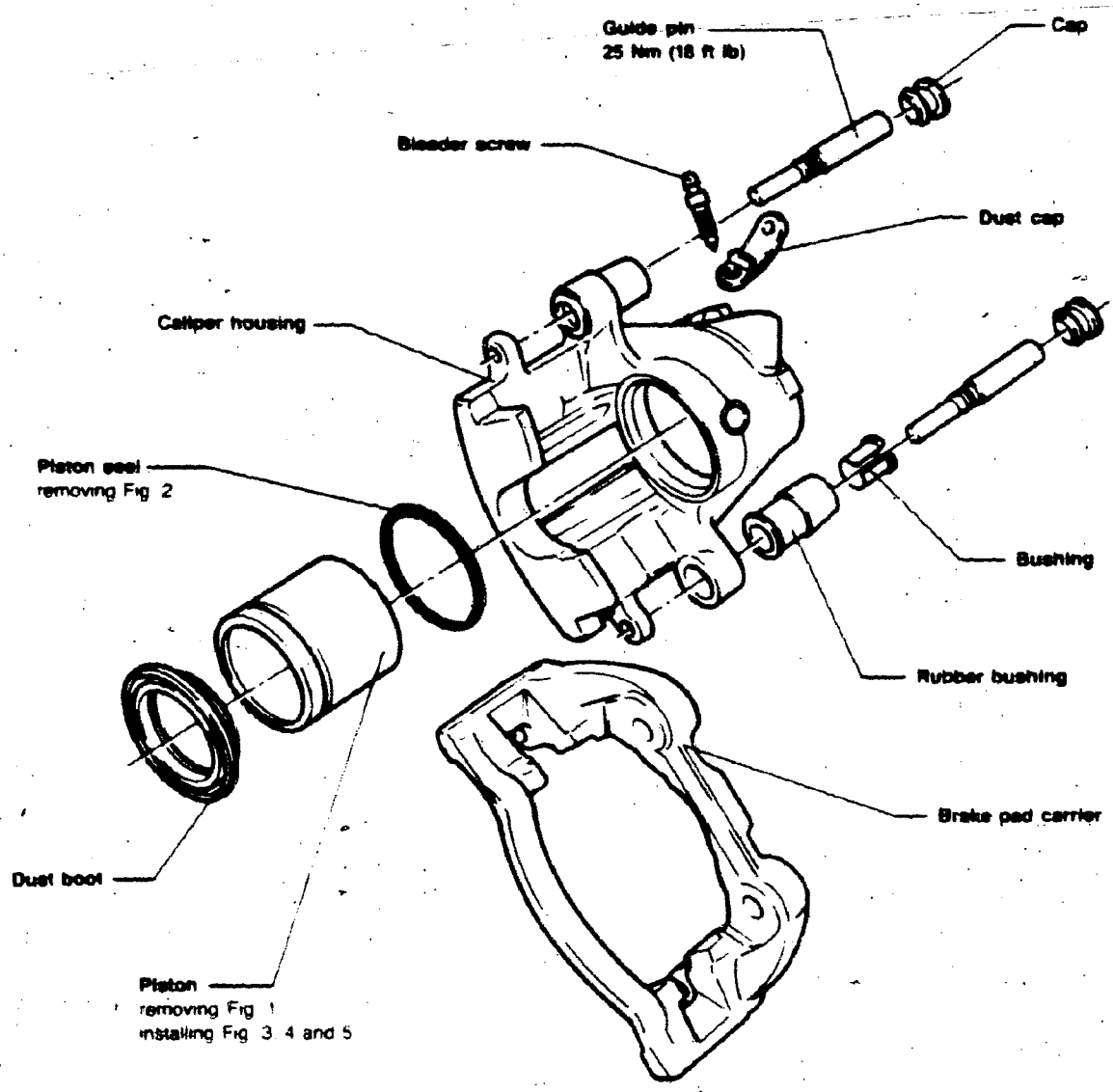

Note

Always use all parts supplied in repair kit

E-5

cardiagn.com

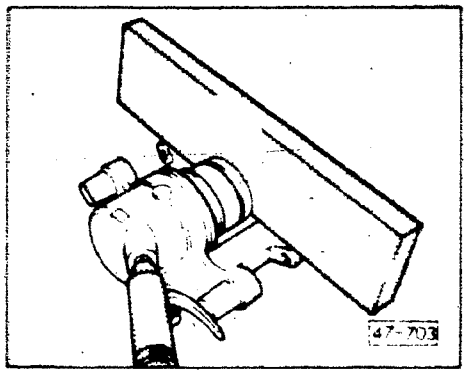

▶ **Fig. 1 Piston, removing**

> **CAUTION**
>
> Place a wooden block in the cylinder housing to prevent damage to the piston. Use only enough air pressure to force piston out.

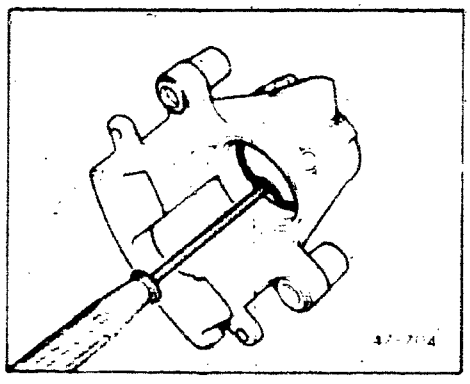

▶ **Fig. 2 Piston seal, removing**

- pry out carefully without damaging cylinder bore

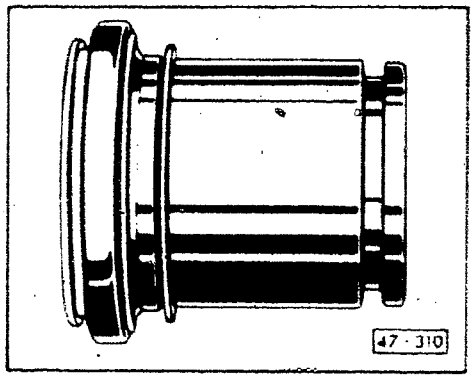

▶ **Fig. 3 Piston, installing**

- slide dust cap onto piston

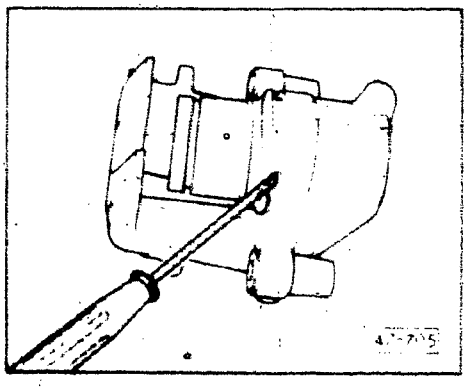

▶ **Fig. 4 Piston, installing**

- lubricate piston and cylinder bore lightly with brake cylinder paste
- install piston and insert inner lip of dust boot into groove in brake cylinder

cardiagn.com

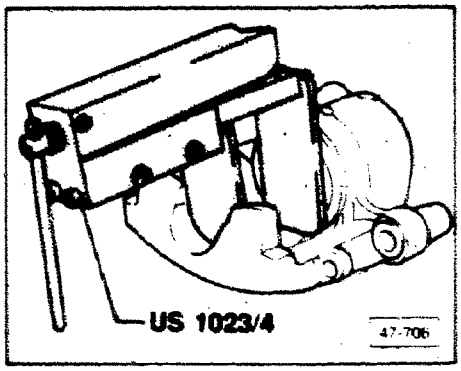

▶ **Fig. 5 Piston, installing**

- press piston in as far as it will go

CAUTION

Outer lip of dust boot must slip into groove in piston.

cardiagn.com

Brake – Hydraulic Components, Regulator, Booster

Note

Always use all parts supplied in the repair kit.

New brake calipers are supplied filled with brake fluid and bled.

Apply a thin coat of brake cylinder paste to brake cylinders, pistons and seals before installing.

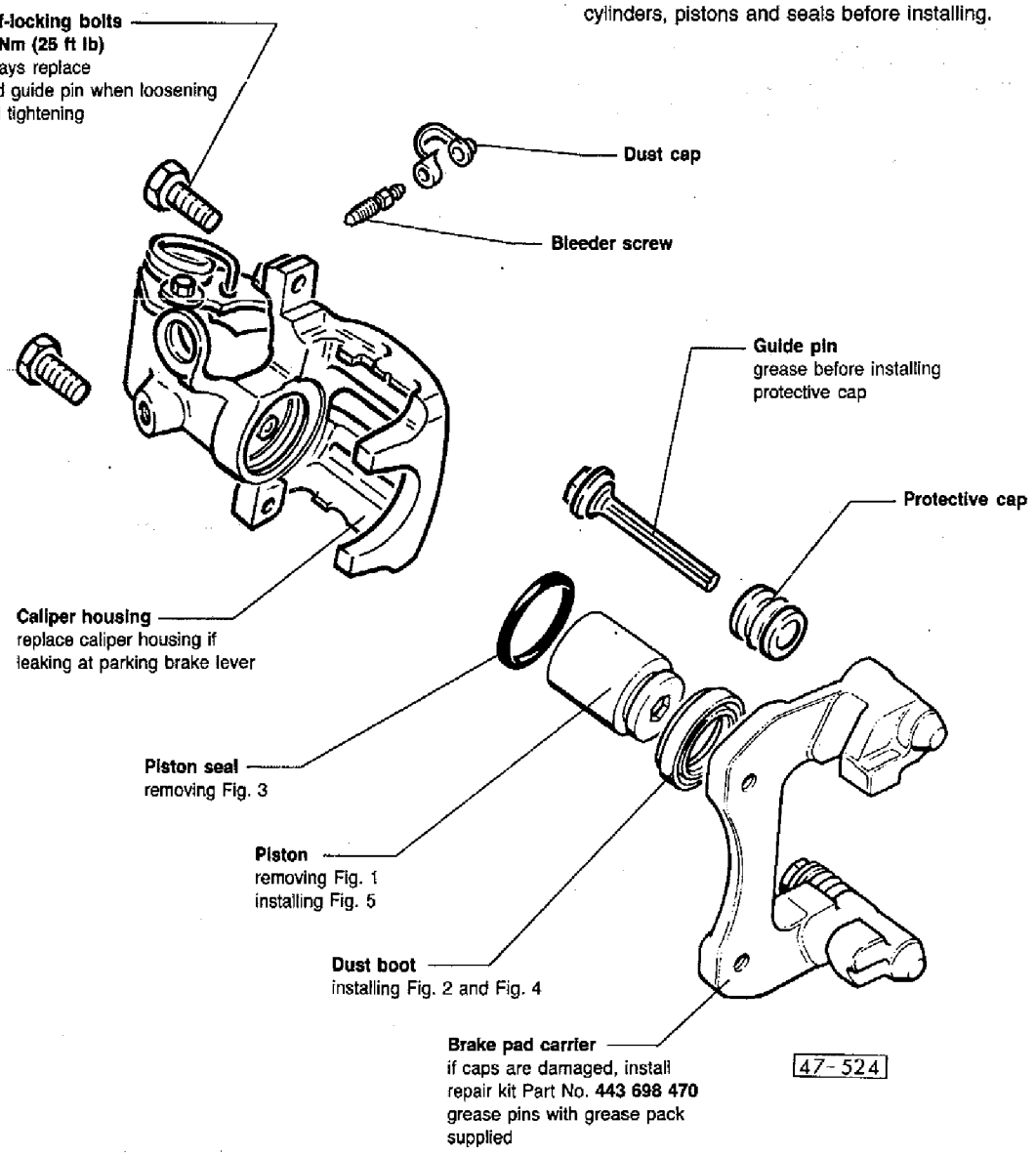

CAUTION

During repairs, brake calipers must be bled (without brake pads) before installing. See Fig. 6.

47-524

cardiagn.com

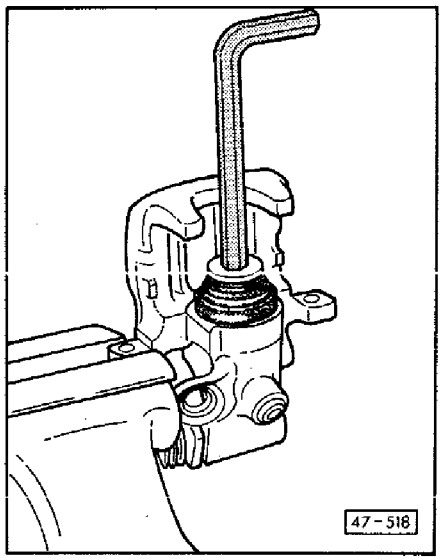

▶ **Fig. 1 Piston, removing**

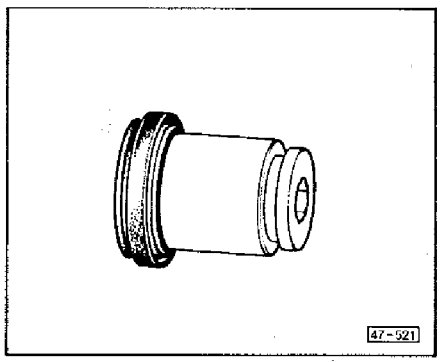

▶ **Fig. 2 Dust boot, installing**

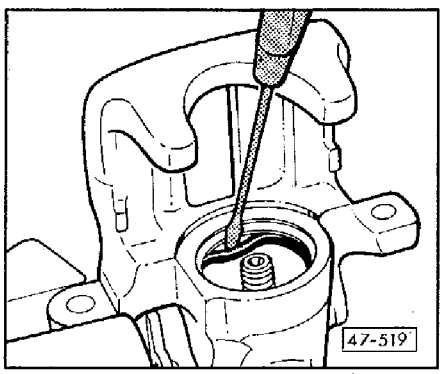

▶ **Fig. 3 Piston seal, removing**

- pry out carefully to avoid damaging cylinder bore

cardiagn.com

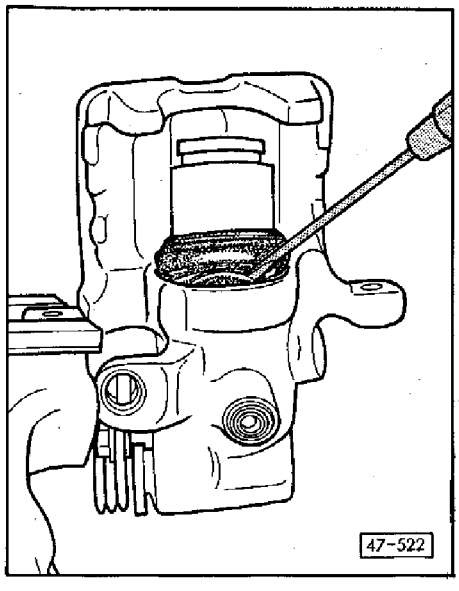

▶ **Fig. 4 Piston, installing**

- lubricate piston and cylinder bore lightly with brake cylinder paste
- insert inner lip of dust boot into groove of brake cylinder

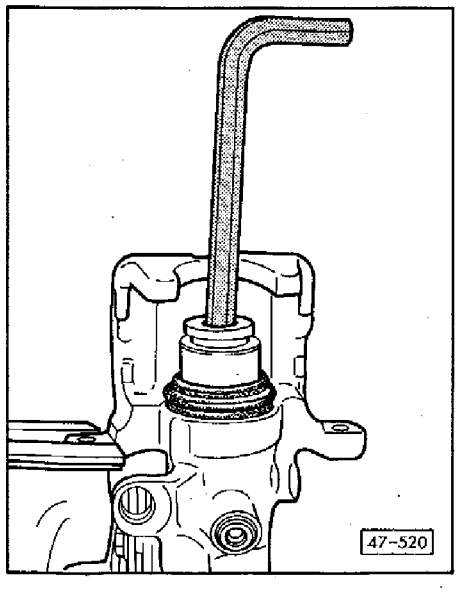

▶ **Fig. 5 Piston, installing**

- screw piston into cylinder while pressing down firmly

CAUTION

Outer lip of dust boot must slip into groove of piston.

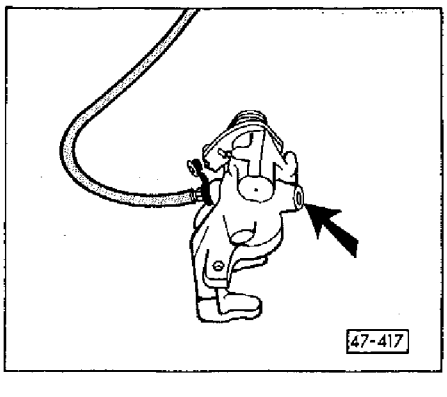

▶ **Fig. 6 Rear brake caliper, pre-bleeding**

- place caliper in position shown
- open bleeder valve and fill with brake fluid from bleeder container until fluid flows from brake hose connection (**arrows**) without bubbles
- close bleeder valve

cardiagn.com

CAUTION

Use all parts supplied in repair kit when repairing.

Coat seals and pistons lightly with VW brake cylinder paste or equivalent before installing.

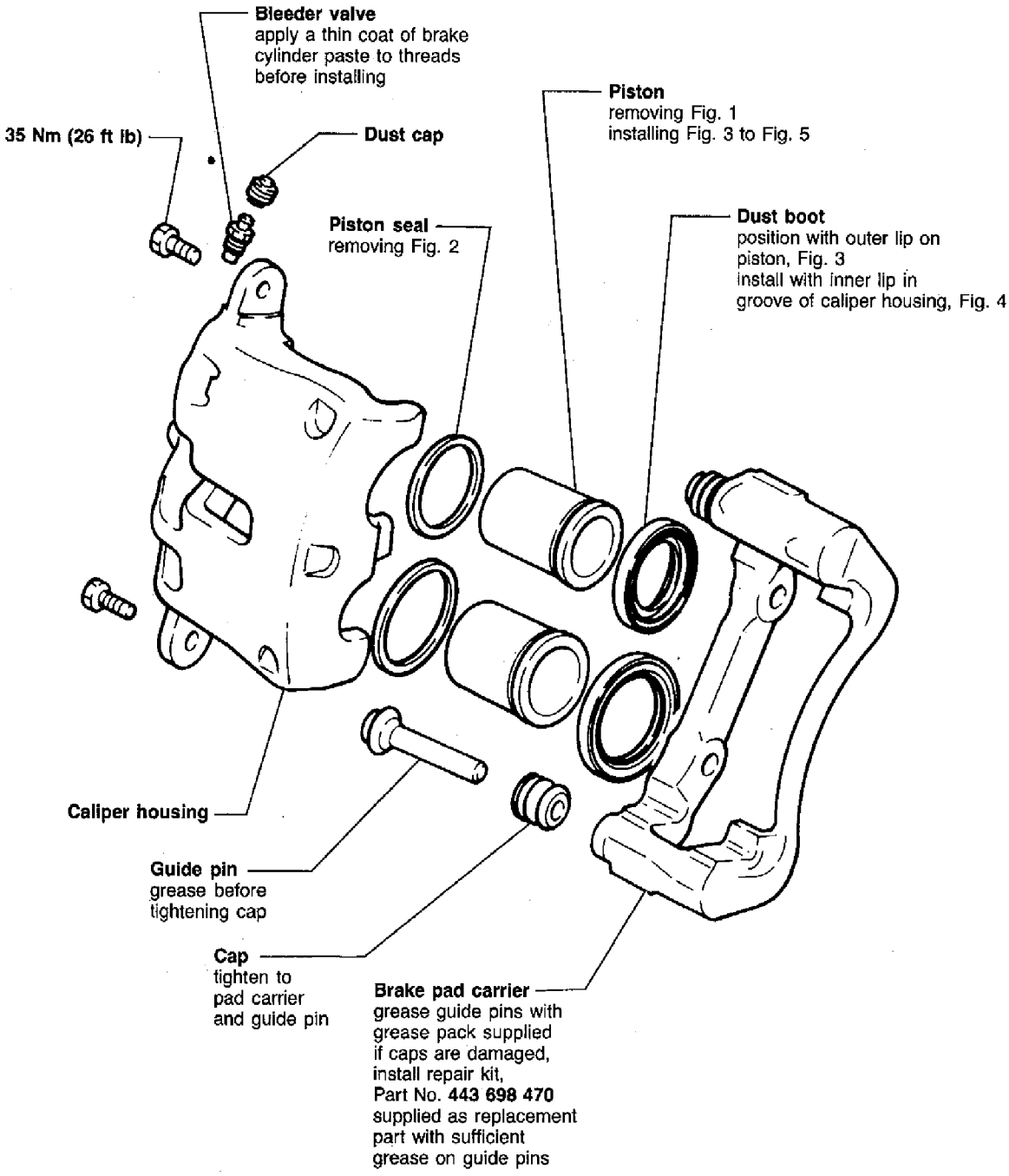

47-595

E-11

cardiagn.com

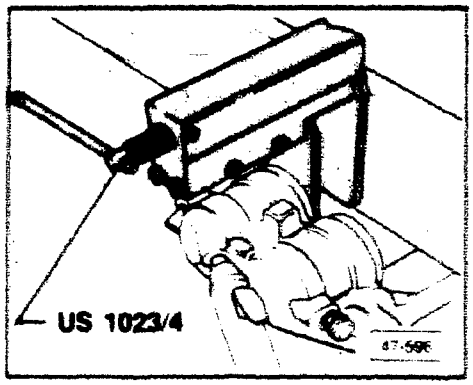

▶ **Fig. 1 Pistons, removing**

- press pistons out individually with compressed air

CAUTION

Place a wooden block in the cylinder housing to prevent damage to the piston. Use only enough air pressure to force pistons out.

Only one piston at a time can be pressed out. Secure second piston with **US 1023/4** or equivalent.

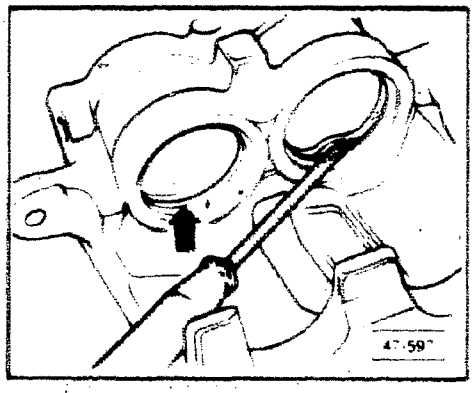

▶ **Fig. 2 Piston seals, removing**

- pry seals out carefully without damaging cylinder bore

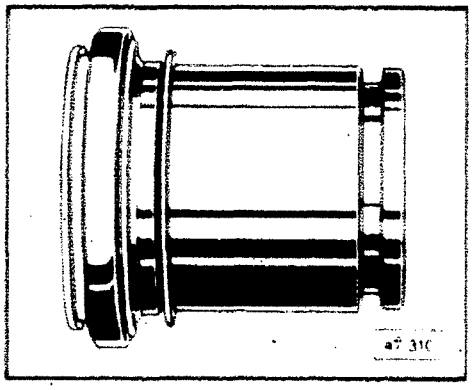

▶ **Fig. 3 Pistons, installing**

- slide dust boot onto piston

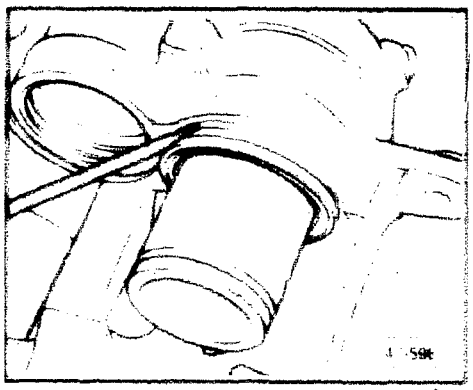

▶ **Fig. 4 Pistons, installing**

- lubricate piston and cylinder bore lightly with brake cylinder paste
- install piston and insert inner lip of dust boot into groove in brake cylinder

cardiagn.com

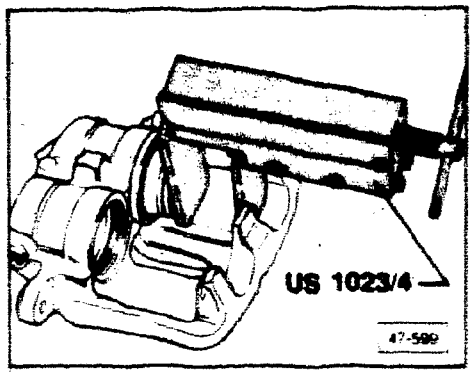

▶ **Fig. 5 Pistons, installing**

- center tool on piston and press in

CAUTION

Outer lip on dust boot must slip into groove in piston.

cardiagn.com

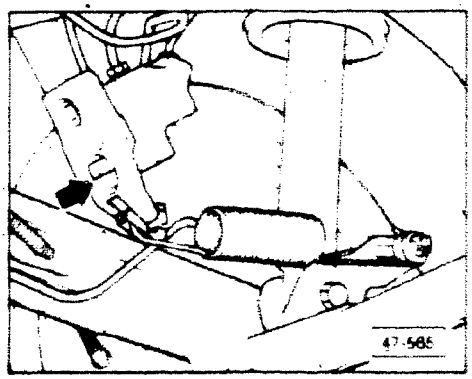

Brake pressure regulator, checking

Note

The height sensitive brake pressure regulator is mounted on the body and is controlled by the movement of the rear axle via a spring.

- depress brake pedal once firmly (vehicle must be on ground)
- release pedal quickly
  - lever on regulator (**arrow**) must move

cardiagn.com

Pressure check

CAUTION

The pressure test must be conducted with the vehicle unloaded (curb weight — no luggage), a full fuel tank and the driver's seat occupied.

Note

Brake system must be filled with fluid and free of air (properly bled) to check adjust pressure regulator.

- remove bleeder screws and connect adaptor to left front wheel brake caliper and right rear wheel brake caliper
- connect gauges
- bleed both hoses and gauge with bleeder valve on gauges
- depress brake pedal until gauge on front axle reads 100 bar (1450 psi) and then maintain pressure for five seconds
  - gauge for rear axle must not vary by more than 10 bar (145.0 psi) during this time

Note

The regulator must be replaced if the specific test results cannot be obtained.

Brake pressure regulator, adjusting

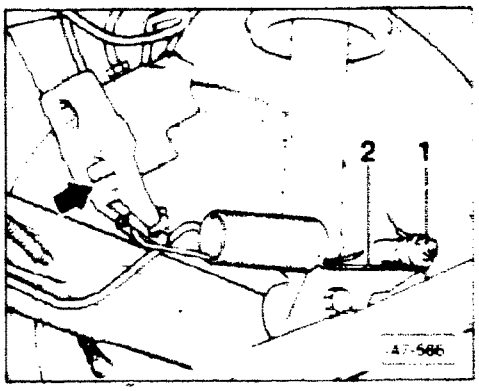

Note

Before adjusting pressure regulator, remove plastic roller and lubricate steel bushing under it with white lubricating paste, Part No. **A0S 126 000 05**.

- lift vehicle off ground so load is taken off rear axle
- press lever on brake pressure regulator (**arrow**) towards rear of vehicle as far as stop
- loosen nut 1
- adjust roller in slot so spring **2** is under no tension
- tighten nut 1 to 20 Nm (14 ft lb)
- repeat pressure check (vehicle on ground) using the following specifications
  - front axle at 50 bar (725 psi) rear axle must read 32.5-42.5 bar (471-616 psi)
  - front axle at 100 bar (1450 psi) rear axle must read 54.0-71.5 bar (783-1036 psi)

cardiagn.com

Pressure check

CAUTION

The pressure test must be conducted with the vehicle unloaded (curb weight — no luggage), a full fuel tank and the driver's seat occupied.

Note

Brake system must be filled with fluid and free of air (properly bled) to check adjust pressure regulator.

- remove bleeder screws and connect adaptor to left front wheel brake caliper and right rear wheel brake caliper.
- bounce vehicle several times
- connect gauges
- bleed both hoses and gauge with bleeder valve on gauges
- depress brake pedal until gauge on front axle reads 100 bar (1450 psi) and then maintain pressure for five seconds
  - gauge for rear axle must not vary by more than 10 bar (145.0 psi) during this time

Note

The regulator must be replaced if the specific test results cannot be obtained.

Brake pressure regulator, adjusting

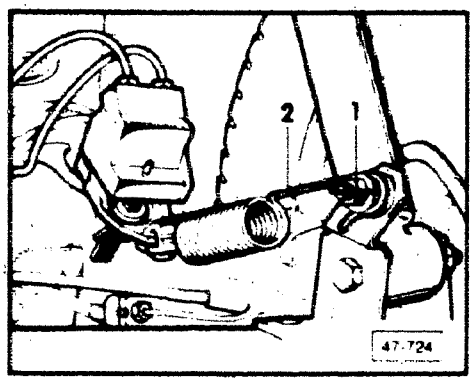

Note

Before adjusting pressure regulator, remove plastic roller and lubricate steel bushing under it with white lubricating paste. Part No. **A0S 126 000 05**.

- lift vehicle off ground so load is taken off rear axle
- press lever on brake pressure regulator (**arrow**) towards rear of vehicle as far as stop
- loosen nut **1**
- insert a 1.0 mm diameter drill bit between spring **2** and plastic roller
- tighten nut **1** to 20 Nm (14 ft lb)
- remove drill bit and release lever
- repeat pressure check (vehicle on ground) using the following specifications
  - front axle at 50 bar (725 psi) rear axle must read 23.5-37.5 bar (341-544 psi)
  - front axle at 100 bar (1450 psi) rear axle must read 45-66 bar (652-957 psi)

E-16

cardiagn.com

Brake booster, checking

- depress brake pedal firmly approximately 20 times with engine **OFF**
- depress brake pedal and hold
- start engine
  - if brake booster is working properly, pedal will fall slightly and then hold

Brake system, bleeding

WARNING

Brake fluid is poisonous.

CAUTION

Brake fluid must not come in contact with paintwork.

Use only new brake fluid which conforms with US specification **FMVSS 116 DOT 4**.

Do not add or mix **DOT 5** silicone type brake fluid with the brake fluid in the vehicle. Severe component corrosion may result. Such corrosion could lead to brake system failure.

Brake fluid is hygroscopic, i.e., it absorbs moisture from surrounding air and should therefore always be stored in air-tight containers.

- connect **US 1116**
- open bleeder screws in prescribed sequence

1 — Brake master cylinder and proportioning valve (ABS only)
2 — right rear
3 — left rear
4 — right front
5 — left front

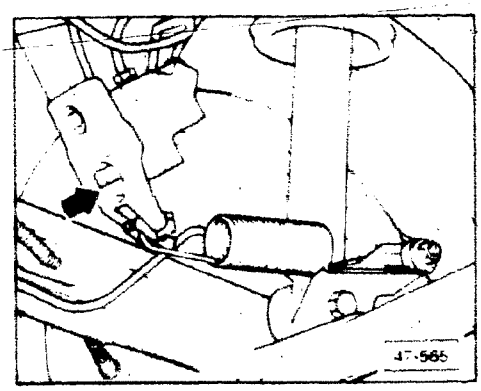

Note

On vehicles with height sensitive brake pressure regulator, press the regulator lever (**arrow**) firmly towards the rear axle when bleeding the rear brakes

E-17

cardiagn.com

Brake fluid, changing

- connect **US 1116**
- open and close bleeder screws in sequence below and drain off specified amount of brake fluid

Sequence	Amount of fluid which must flow out:
brake master cylinder brake proportioning valve	250 cm^3 each bleed screw **(only with ABS)**
rear right	500 cm^3
rear left	500 cm^3
front right	500 cm^3
front left	500 cm^3

cardiagn.com

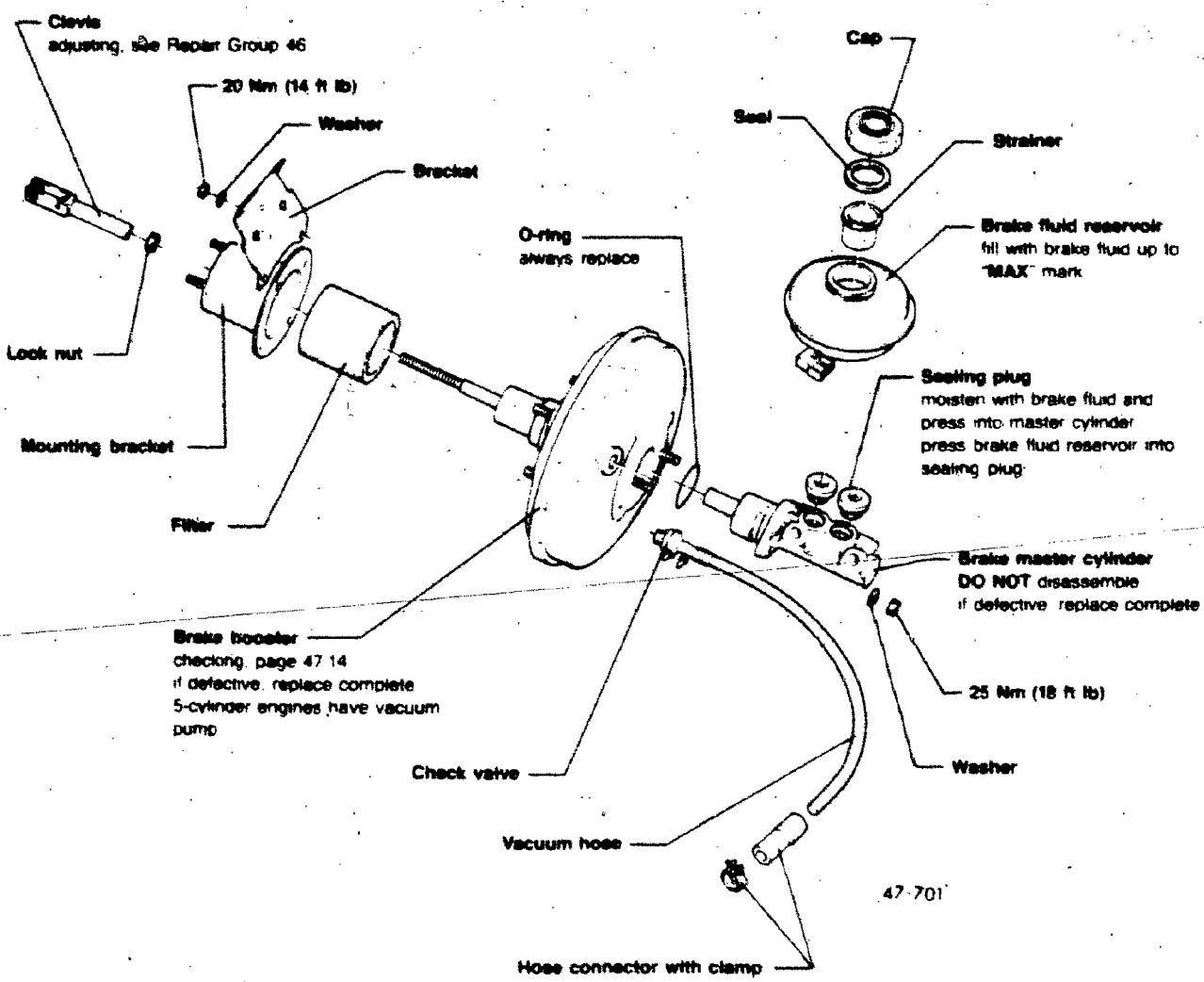

cardiagn.com

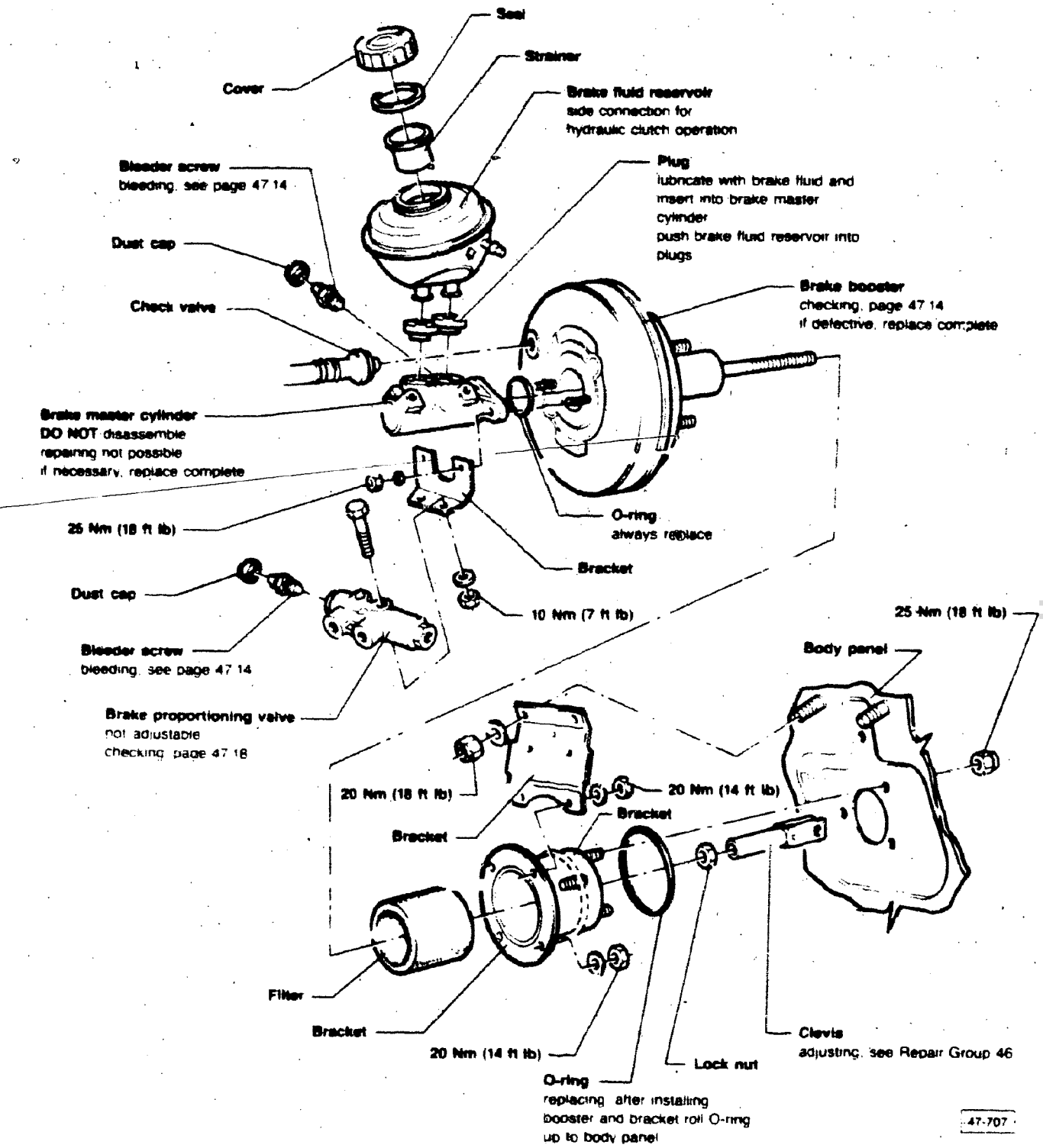

E-20

cardiagn.com

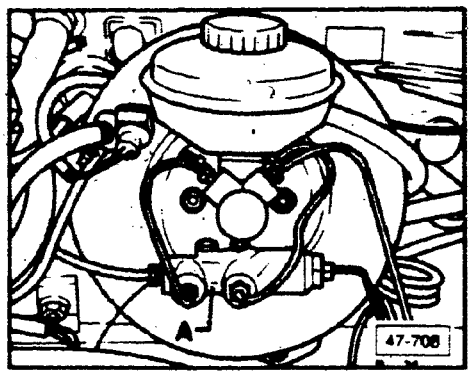

Brake proportioning valve, checking

Note

The proportioning valve **A** is located under the brake booster.

Pressure check

- lift vehicle and connect **VW 1310** to left front and left rear brake calipers
- bleed gauges
- depress brake pedal until gauge on front caliper reads 50 bar (725 psi)
  - gauge on rear caliper must read (30-35 bar (435-507 psi)
- increase brake pedal pressure until gauge on front caliper reads 100 bar (1450 psi)
  - gauge on rear caliper must read 45-50 bar (652-725 psi)

Note

The proportioning valve must be replaced if the specific test results cannot be obtained.

- remove gauges and bleed brake system

cardiagn.com

Hydraulic system changes

Beginning in the 1990 Model Year, the following parts have been modified in vehicles having an hydraulic brake servo:

- high pressure hose
- banjo bolts for high pressure connections to hydraulic pump and pressure accumulator
- O-ring seals for high pressure hose connections
- hydraulic pump
- pressure accumulator
- bracket for pressure accumulator
- bushings for pressure accumulator mounting

These changes were gradually introduced beginning with the following VIN:

Coupe **8B LA 006 861**

cardiagn.com

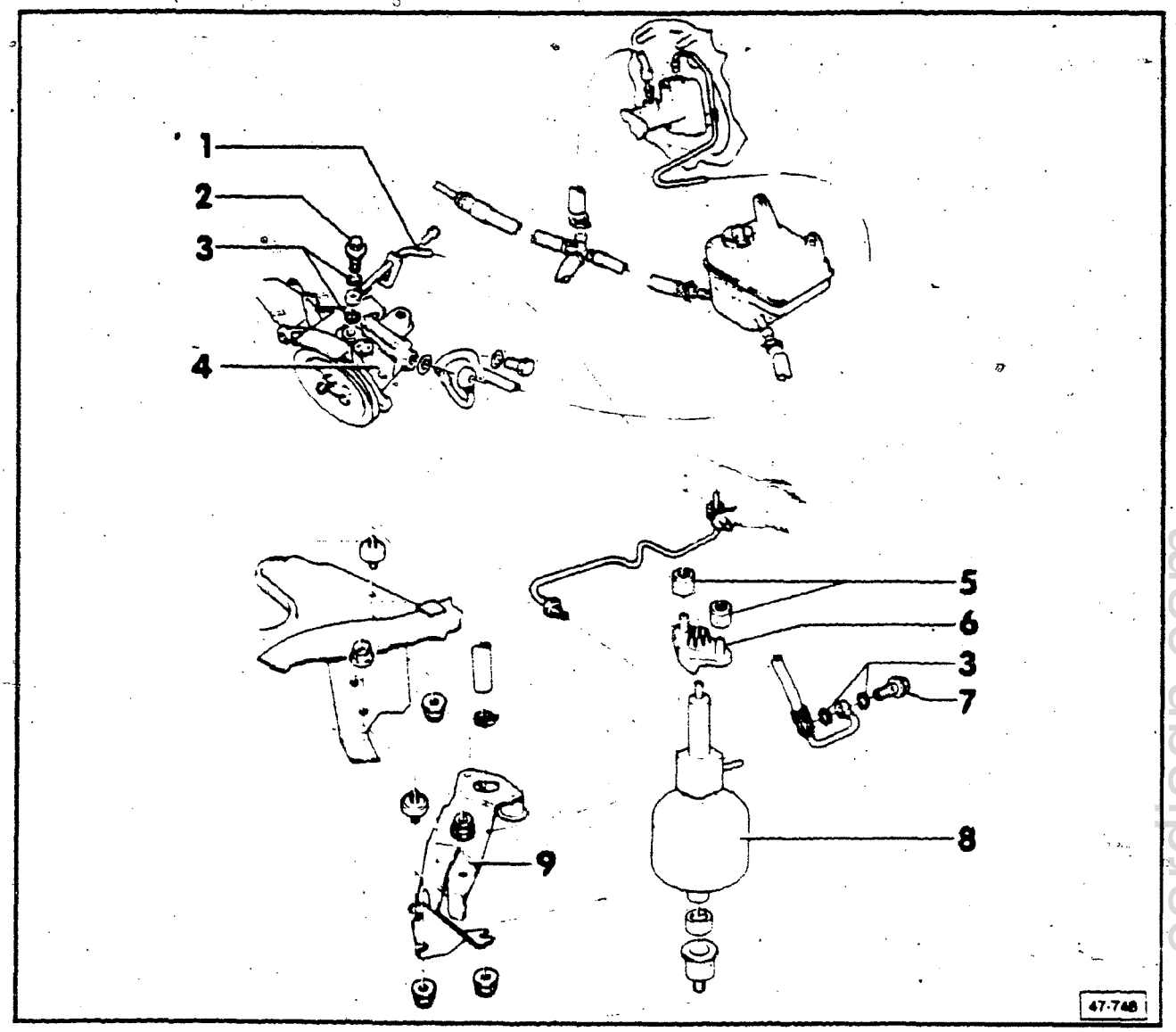

1 — **High pressure hose**
with grooves for O-ring seals

2 — **Banjo bolt**
- with strainer
- M10 x 1 (was M12 x 1.5)
- **30 Nm (22 ft lb)**

3 — **O-ring seals**
- always replace
- previously metal seals

4 — **Hydraulic pump**
- thread for high pressure hose connection = M10 x 1 (was M12 x 1.5)
- use new metal seals when connecting **VW 1354**

5 — **Bushings**
apply acid-free lubricant when installing

6 — **Mount**
install bushings and place on accumulator

7 — **Banjo bolt**
- with strainer
- M10 x 1 (was M12 x 1.5)

8 — **Pressure accumulator**
- thread for high pressure hose connection = M10 x 1 (was M12 x 1.5)
- gas pressure when new = 78 – 82 bar (1131 – 1189 psi)

9 — **Bracket**
- for pressure accumulator
- install in vehicle before installing hydraulic lines

cardiagn.com

CONTINUED IN THE

BEGINNING OF NEXT ROW

cardiagn.com

CAUTION

Reservoir must be filled with hydraulic oil.
Part No. **G 000 002.**

Note

Always replace sealing rings between connections

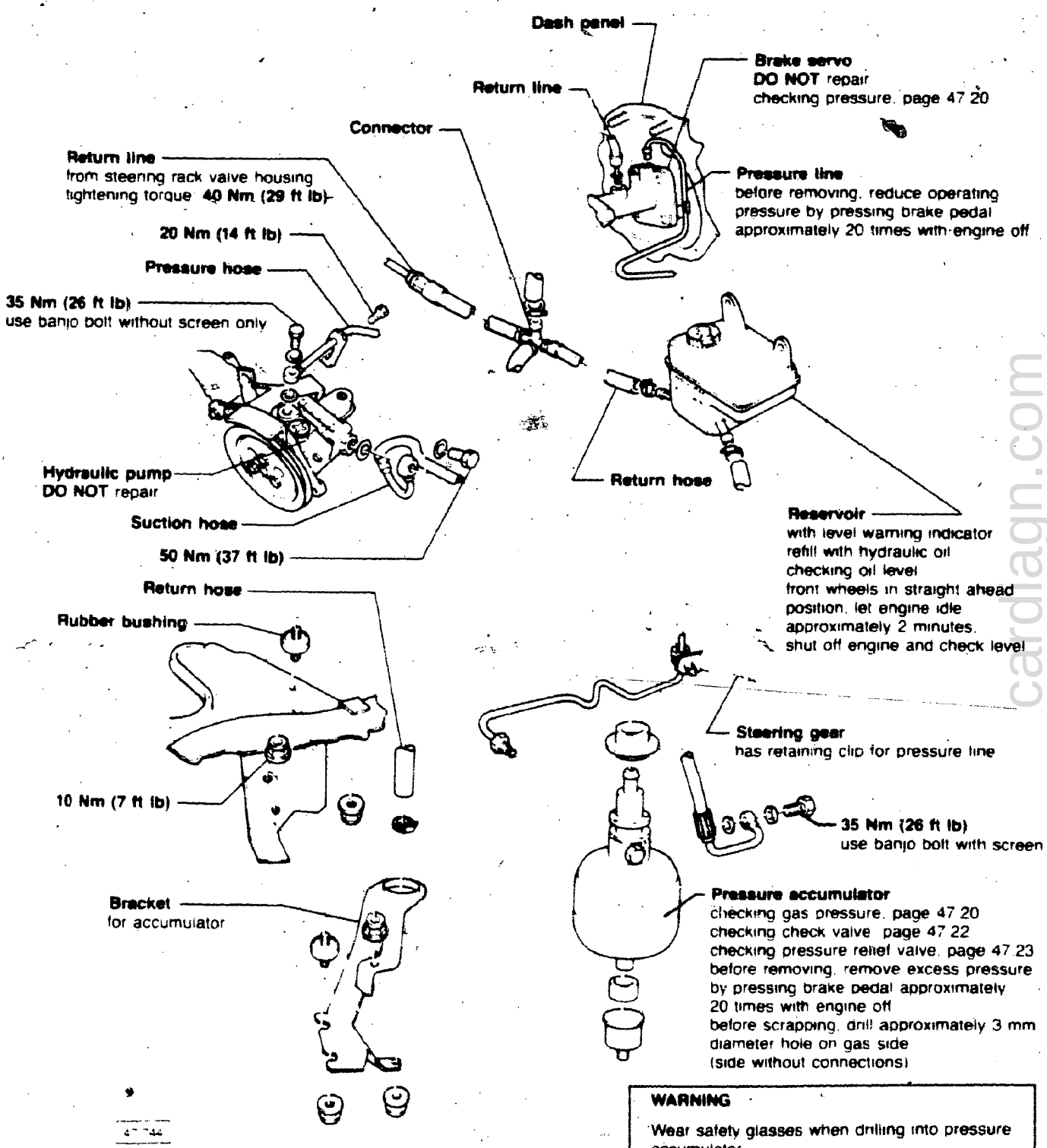

WARNING

Wear safety glasses when drilling into pressure accumulator

cardiagn.com

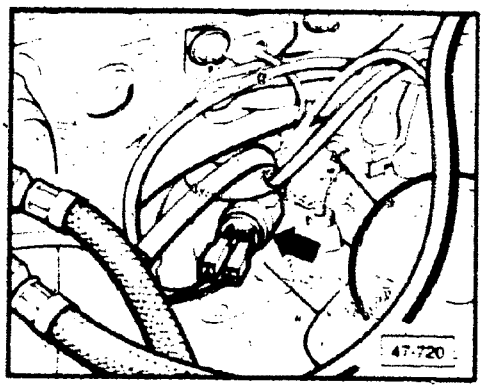

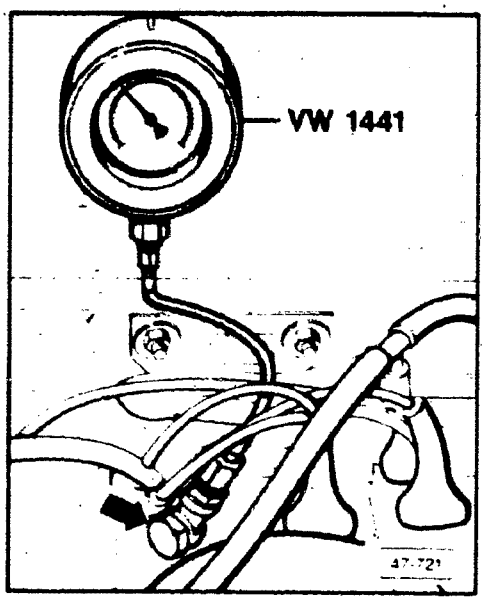

Gas pressure of pressure accumulator, checking

Note

- gas pressure of new accumulator 78-82 bar (1131-1189 psi) at 20°C (68°F)
- minimum gas pressure 30 bar (435 psi) at 20°C (68°F)

- with engine not running, press brake pedal about 20 times to reduce system pressure
- disconnect wire on warning light switch and remove switch (**arrow**)
- attach pressure gauge with hollow bolt and copper washers to brake servo unit

Note

Attach thick copper washer between brake servo unit and banjo fitting and thin copper washer between hollow bolt and banjo fitting.

- start engine and let idle until pressure gauge reads approximately 140 bar (2030 psi)
- turn ignition **OFF**
- pump brake pedal until pressure drops slowly
  - pressure reading at which gauge pointer drops down rapidly to "0" is gas pressure of pressure accumulator
  - if pressure is lower than 30 bar (435 psi) accumulator must be replaced
- remove pressure gauge
- install brake light warning switch and reconnect wire connector
- check all connections for leaks

cardiagn.com

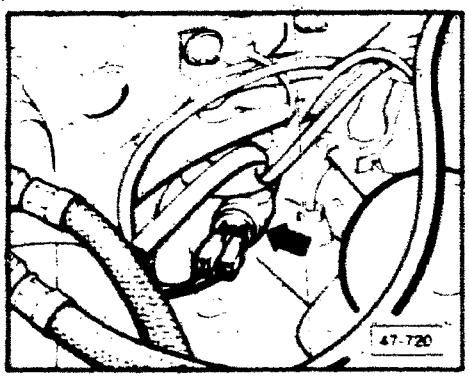

Operating pressure of hydraulic brake servo, checking

Test conditions:

- V-belt tension **OK**
- no leaks in servo system

- with engine not running, press brake pedal about 20 times to reduce pressure in system
- disconnect wires on warning light switch and remove switch (**arrow**)

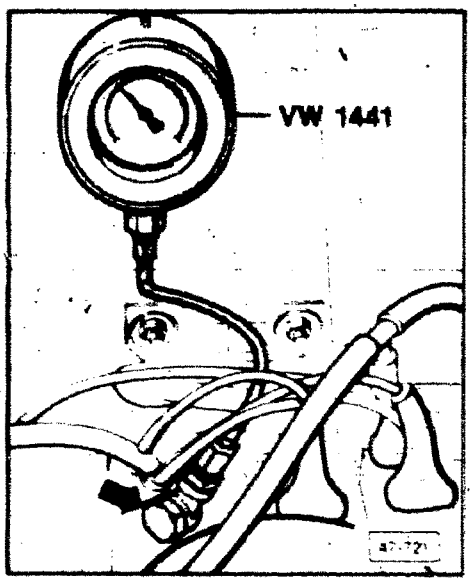

- attach pressure gauge with hollow bolt and copper washers to brake servo unit (**arrow**)

Note

Attach thick copper washer between brake servo unit and banjo fitting and thin copper washer between hollow bolt and banjo fitting.

- start engine and let idle until pressure gauge reads more than 140 bar (2030 psi)
  - if specified pressure is not reached, check delivery rate of central hydraulic pump
- turn ignition **OFF**, leave pressure gauge connected

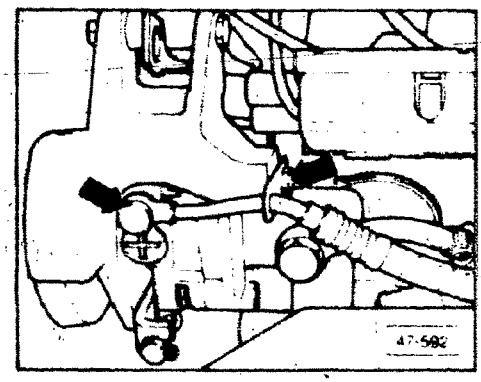

Delivery rate, checking

- remove pressure line from hydraulic pump (**arrow**)

more

cardiagn.com

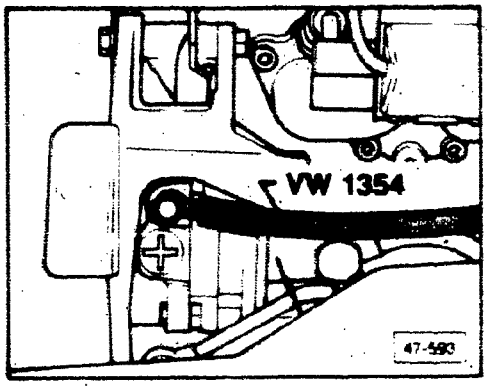

- connect hose of pressure limiter **VW 1354** to pump, using existing hollow bolt.
- remove cap from fluid reservoir

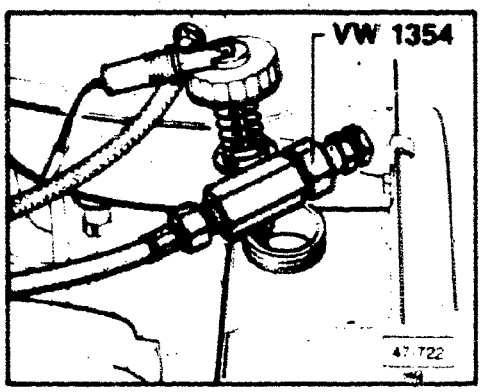

- put end of pressure limiter hose into reservoir
- start engine, let idle until line is bled (no bubbles)
- turn ignition **OFF**
- hold hose into measuring jar
- start engine and let idle
- check delivery rate
  - must be at least 0.3 liters min. (0.3 US qt min)
  - if specification not reached, replace hydraulic pump
  - if delivery rate is **OK**, but operating pressure is still not reached, replace pressure accumulator
- with engine shut off, press brake pedal about 20 times to reduce pressure in system
- remove pressure gauge and pressure limiter
- install brake warning light switch and reconnect wire connectors
- attach pressure line to hydraulic pump
- check all connections for leaks

Pressure accumulator, check valve, checking

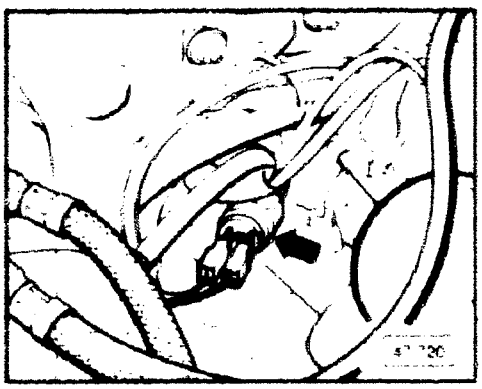

Test condition:

- pump delivery rate **OK**
- no leaks in brake servo unit

- with engine not running, press brake pedal about 20 times to reduce pressure in system
- disconnect wires on warning light switch and remove switch (**arrow**)

more

cardiagn.com

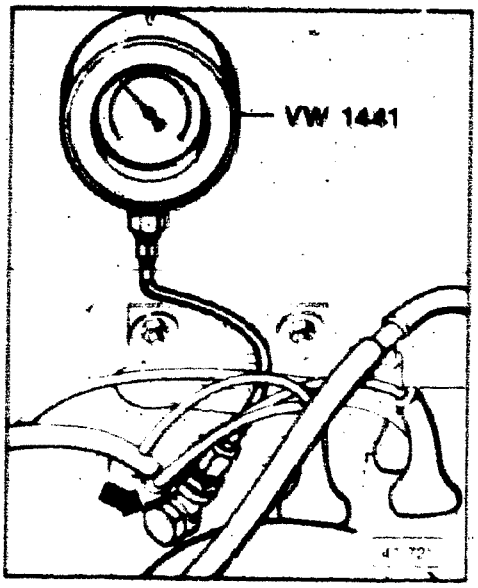

- attach pressure gauge with hollow bolt and copper washers to brake servo unit (**arrow**)

Note:

Attach thick copper washer between brake servo unit and banjo fitting and thin copper washer between hollow bolt and banjo fitting.

- start engine and let idle until pressure gauge reads approximately 140 bar (2030 psi)
- turn ignition **OFF**
- pump brake pedal until pressure drops to 135 bar (1957 psi)
  - operating pressure should not drop below 130 bar (1885 psi) within 5 minutes
  - if pressure drop is more, check-valve is leaking. Replace pressure accumulator
- with engine not running, press brake pedal about 20 times to reduce operating pressure
- remove pressure gauge
- install brake light warning switch and reconnect wire connectors
- check all connections for leaks

Pressure accumulator, pressure relief valve, checking

Test condition:

- pump delivery rate **OK**
- with engine not running, press brake pedal about 20 times to reduce pressure in system
- disconnect wires on warning light switch and remove switch (**arrow**)

more

cardiagn.com

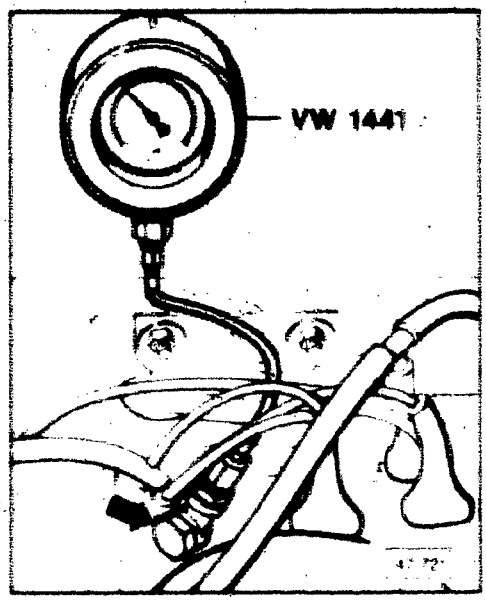

- attach pressure gauge with hollow bolt and copper washers to brake servo unit (**arrow**)

Note

Attach thick copper washer between brake servo unit and banjo fitting and thin copper washer between hollow bolt and banjo fitting.

- start engine and let idle until pressure gauge reads more than 140 bar (2030 psi)
  - if specification is not reached, pressure relief valve leaking, replace pressure accumulator
- recheck system pressure
- with engine not running, press brake pedal about 20 times to reduce system pressure
- remove pressure gauge
- install brake light warning switch and reconnect wire connectors
- check all connections for leaks

cardiagn.com

Brake – Hydraulic Components, Regulator, Booster

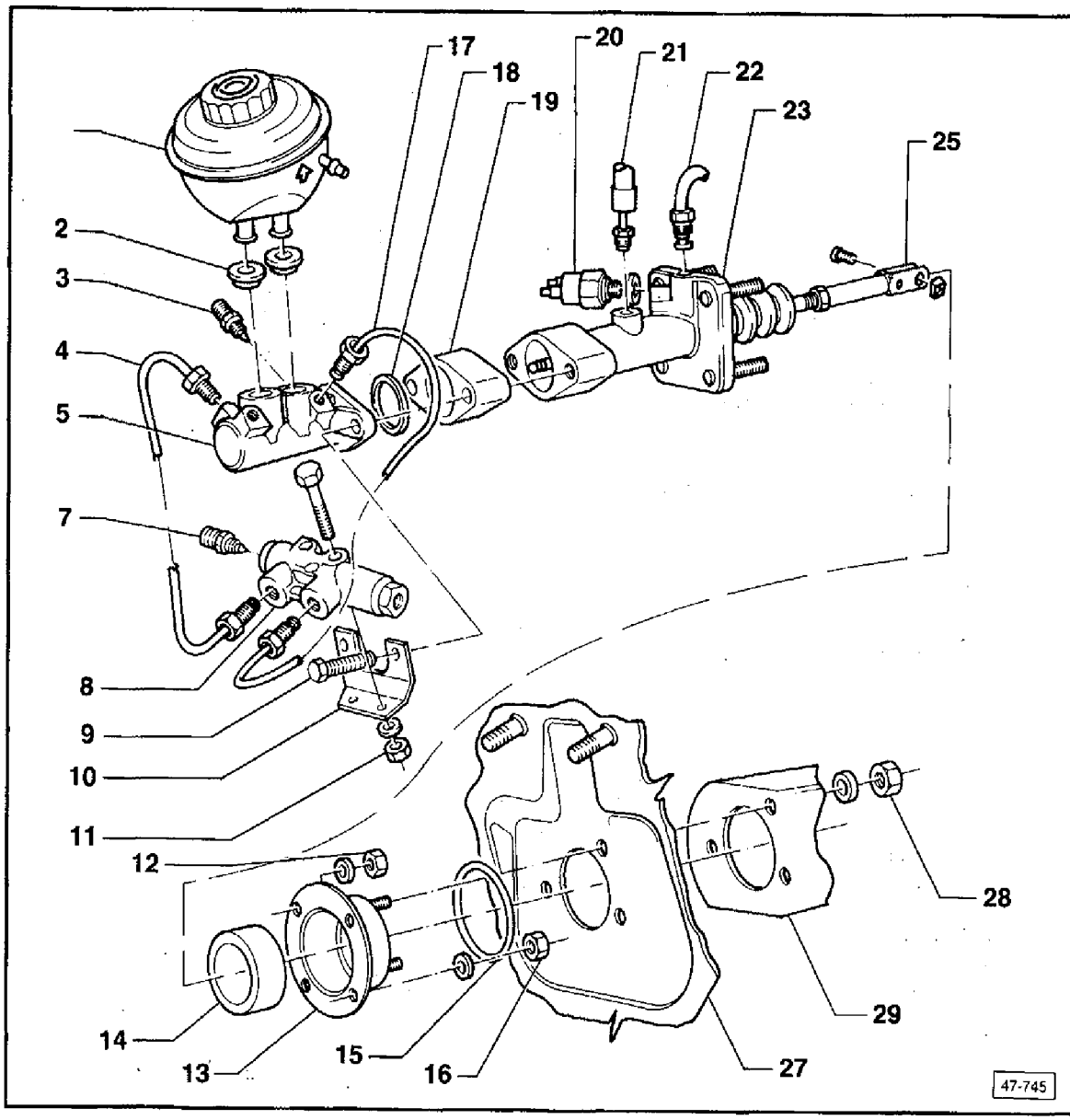

CAUTION

Use only new brake fluid. Note label on brake fluid reservoir.

1 — **Brake fluid reservoir**
with level warning indicator

2 — **Plug**
lubricate with brake fluid
insert into brake master cylinder
press in fluid reservoir

3 — **Bleeder valve**
always bleed master cylinder after removing/installing
lubricate threads lightly with brake cylinder paste

4 — **Brake line**

5 — **Brake master cylinder**
diameter: 23.81 mm

7 — **Bleeder valve**
lubricate threads lightly with brake cylinder paste before installing

cardiagn.com

8 — **Proportioning valve**
not adjustable

9 — **25 Nm (18 ft lb)**

11 — **10 Nm (7 ft lb)**

12 — **20 Nm (14 ft lb)**

13 — **Bracket**

14 — **Filter**

15 — **O-ring**,
install on bracket before installing
brake servo roll onto dash panel

16 — **20 Nm (14 ft lb)**

17 — **Brake line**

18 — **O-ring**
always replace

19 — **Extension**

20 — **Warning switch**
20 Nm (14 ft lb)
warning light on instrument panel
will come on if pressure drops to
between 127-87 bar (1841-1261 psi)

21 — **Return line**

22 — **Pressure line**
to accumulator

23 — **Hydraulic brake servo**
DO NOT press brake pedal with master
cylinder removed
checking for leaks
with engine off loosen return line
defective servo will drip fluid
(occasional drips are **OK**)

25 — **Clevis**
adjusting Fig

27 — **Dash panel**

28 — **25 Nm (18 ft lb)**

29 — **Pedal bracket**

cardiagn.com

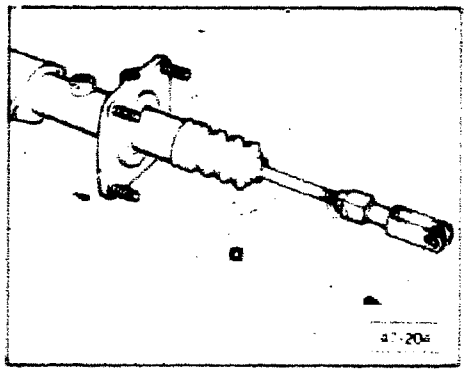

▶ Fig. 1 **Clevis, adjusting**

a = 226.0 ± 0.5 mm
(8.90 ± 0.020 in.)

Note

Clevis must be aligned at right angle to brake servo surface when measuring.

cardiagn.com

Index

Steering column
- assembly 48.3
- ★ lock washers/spring 48.6
- removing/installing 48.4

Steering wheel
- assembly 48.2

Power steering pump
- mounting, 4-cylinder 48.27
- mounting, 5-cylinder 48.31

Pump pressure
- checking, 4-cylinder 48.28
- checking, 5-cylinder 48.32

Pressure/return hoses
- replacing 48.20

Reservoir
- assembly 48.34

Steering gear
- assembly 48.19
- assembly (up to 89 JA 413 627) 48.21
- assembly (from 89 JA 413 628) 48.25
- rack seal, installing 48.22

Steering play
- adjusting 48.26

Steering system
- bleeding/filling 48.35
- checking for leaks 48.35

Valve housing seal
- driving out/in 48.22

V-belt
- adjusting, 4-cylinder 48.30
- adjusting, 5-cylinder 48.33

Hydraulic cooling line
- assembly 48.39

Power steering pump
- assembly 48.36
- housing seal 48.37
- limiting valve, checking 48.37
- rotor, removing 48.38
- ★ Vickers, installing 48.51

Steering gear
- ★ assembly (from 8A MA 054 850) 48.44A

Coupe

Power steering pump
- ★ Vickers, installing 48.51

Steering gear
- assembly 48.41
- ★ assembly (from 8B MA 002 645) 48.44A

Tandem hydraulic pump
- mounting 48.42

Technical data
- chart 48.40

Vane pump flow pressure
- checking 48.43

V-belt
- tightening/replacing 48.44

Vehicles with Airbag

Airbag unit
- removing/installing 48.10
- ★ disposal of active unit 48.11a

Connector
- airbag voltage supply 48.9

Steering column, collapsible
- assembly 48.12
- lock washers/spring 48.18
- removing/installing 48.14

Steering wheel
- assembly 48.7

★ NEW INFORMATION since last filming

cardiagn.com

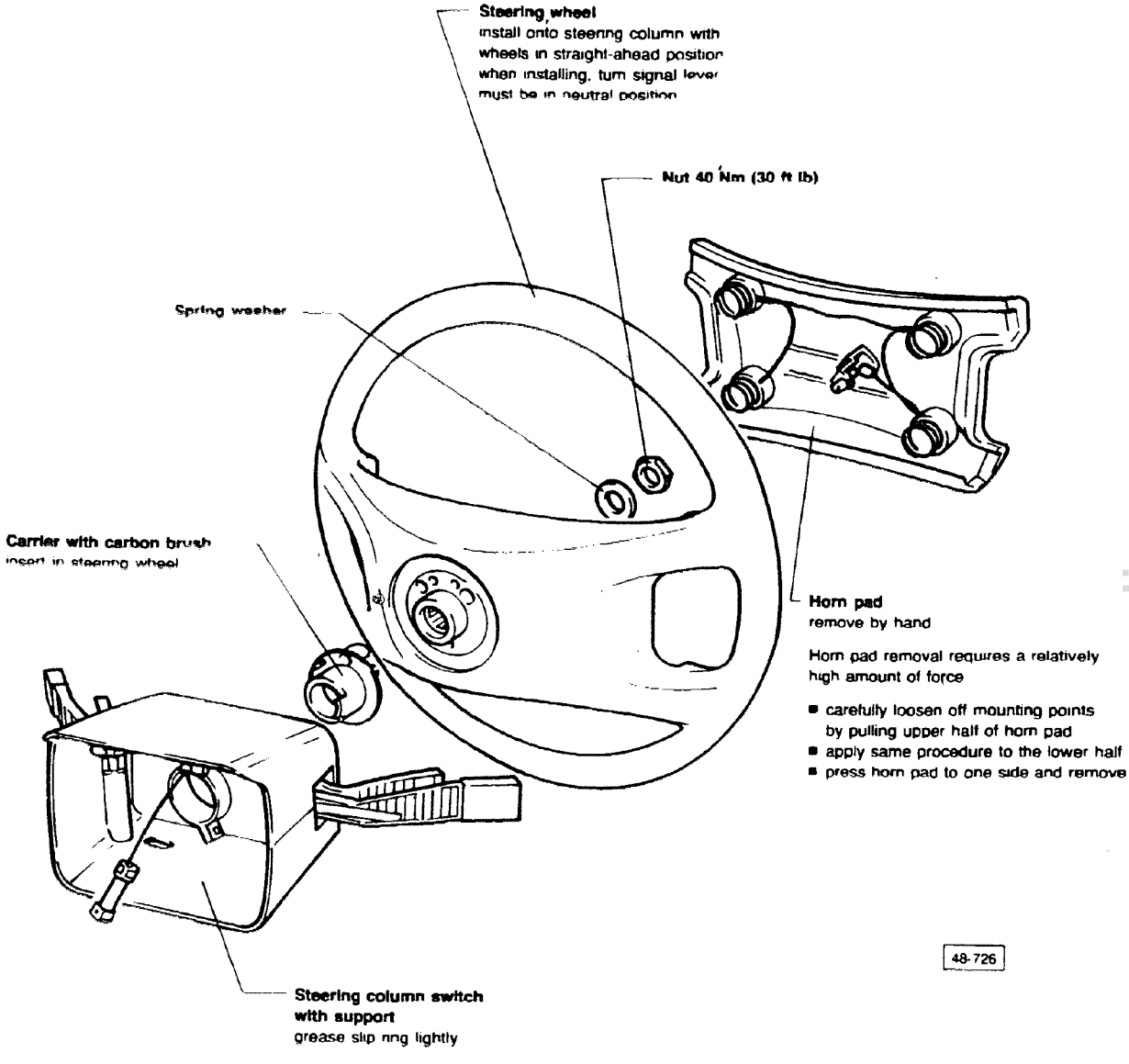

cardiagn.com

CAUTION

Washers are pre-tensioned

Be careful of flying sparks when grinding. If necessary, cover instrument panel and windshield.

Note

Upper and lower parts of column tube have a red dot. Always replace the column tube if the red dot is worn or sheared off

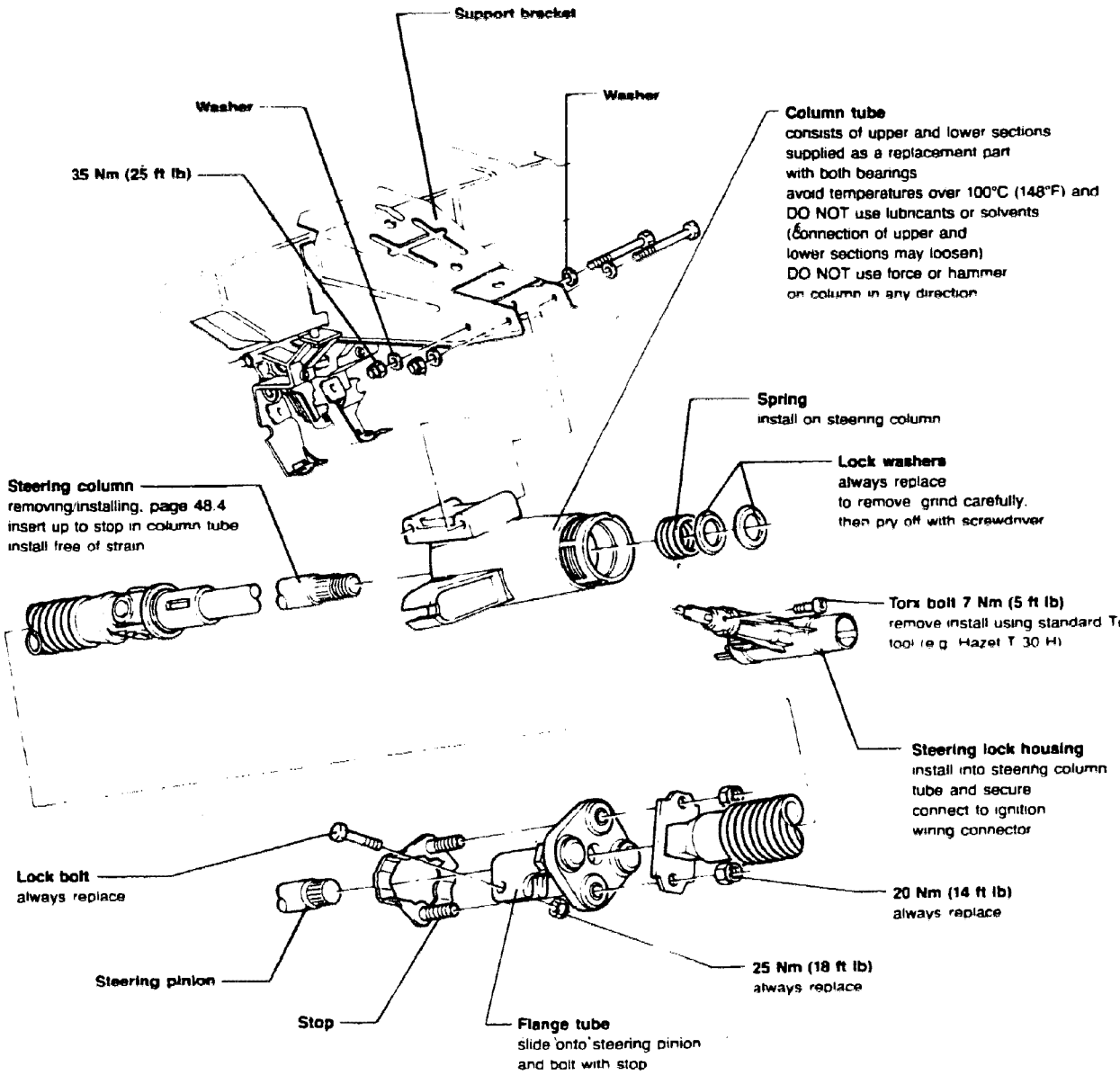

cardiagn.com

Steering column and column tube, removing/installing

Removing

- disconnect battery ground strap
- remove lower left-hand section of instrument panel
- remove steering wheel (see page 48.2)
- remove steering column switch with trim

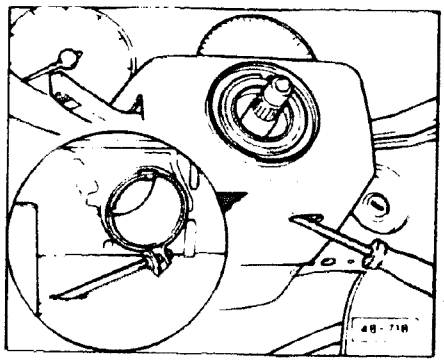

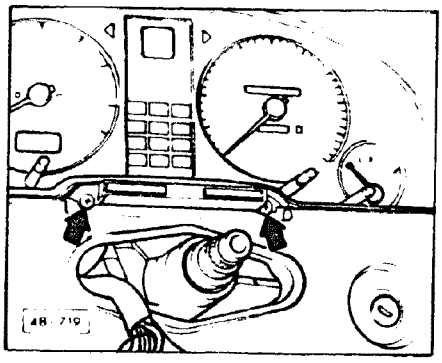

- remove instrument cluster screws (**arrows**)
- disconnect wiring connector at ignition switch

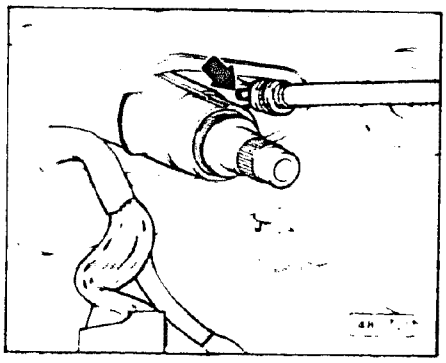

- remove Torx bolt
- unbolt column tube from support bracket mounting
- remove steering lock housing from column tube (**arrows**)
- push steering column and column tube downward until they can be taken out under the instrument panel

cardiagn.com

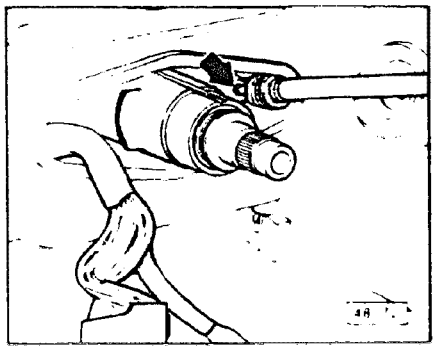

Installing

- install steering column in column tube
- guide steering column under instrument panel and then push it upwards
- install steering lock housing in column tube
- install Torx bolt (**arrow**)

- insert ignition key in ignition lock for steering column
- unlock steering column lock so that column can be turned as required
- install bolt in support mounting and column tube
- bolt together stop, flange tube and steering column

- center column tube by sliding it up and down in support mounting so that coupling disc (on flange tube) is free of strain when steering wheel is turned
- fasten column tube to support bracket
- connect wiring connector at ignition switch

Note

For procedure to install new spring and lock washers on column, see page 48.6

- install instrument cluster
- install steering column switch
- install steering wheel
- connect battery ground strap
- check function of steering column switch

Note

Steering wheel spoke must be horizontal with wheels in straight-ahead position.

cardiagn.com

Lock washers/spring, pressing onto steering column

- install spring onto steering column
- install new lock washers onto steering column

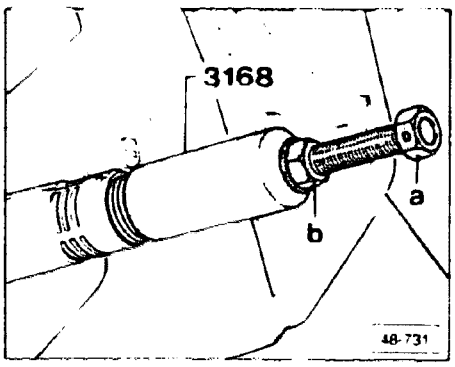

- thread tensioner **3168** onto steering column up to stop (i.e nut **b** threaded down)

- hold spindle **a** and tighten nut **b** until dimension **a** (in illustration 48-874) is attained
  - **a** = 54.5 to 55.5 mm

- loosen nut **b**
- remove tensioner from steering column

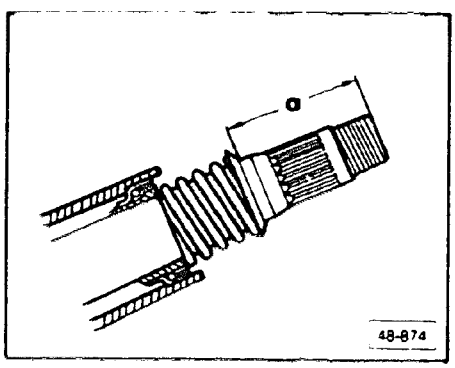

cardiagn.com

THIS FRAME INTENTIONALLY LEFT

BLANK

cardiagn.com

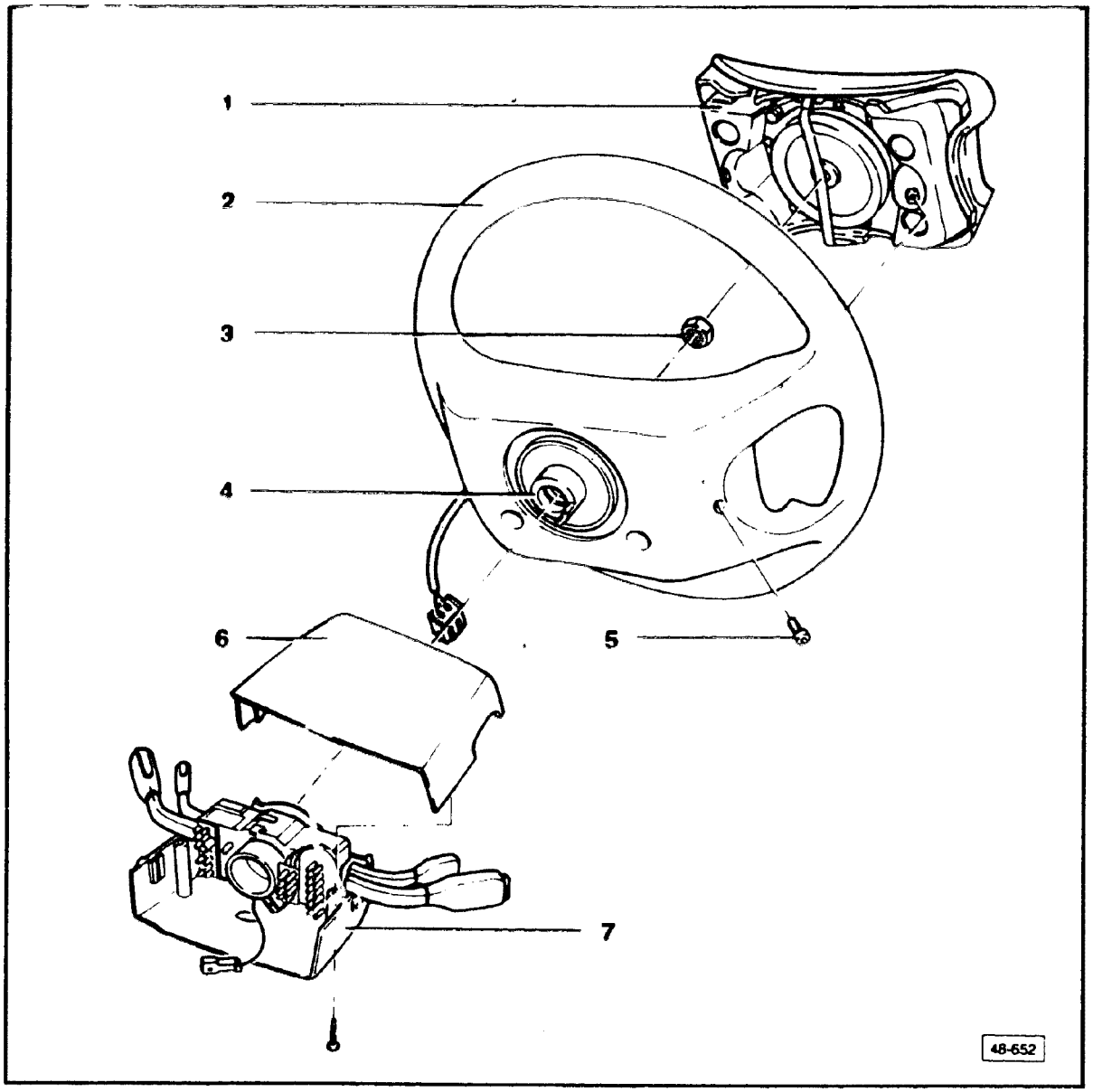

WARNING

Airbag System

To prevent personal injury or airbag system failure, **ONLY TRAINED PERSONNEL** should disassemble, assemble, or service the airbag system.

CAUTION

Always disconnect the voltage supply to the airbag system when doing repairs requiring the removal of airbag components.

Note

Beginning with model year 1990, all Audi 80/90 Coupe vehicles are equipped with a driver airbag housed in the steering wheel assembly.

Repair Group 48 contains steering-related airbag procedures and safety precautions. For airbag system diagnosis and service, refer to Repair Group 96.

Do not weld or straighten steering components.

Replace all self-locking fasteners.

cardiagn.com

1 — **Airbag unit**
- removing/installing, page 48 10

2 — **Steering wheel**
- install in centered position, with turn signal lever in Neutral and front road wheels straight ahead
- replacement steering wheel must be factory-released, and equipped with canceling ring and contact ring

> **CAUTION**
>
> Do not place any stickers or covering on a steering wheel equipped with an airbag.

3 — **Hex nut — 40 Nm (30 ft lb)**

4 — **Canceling ring/contact ring assembly**
- can be replaced separately from wheel

5 — **Mounting bolt for airbag unit — 6 Nm (53 in. lb)**

6 — **Cover, steering column switch**

7 — **Steering column switch in mount**

cardiagn.com

Connector for voltage supply, installed position

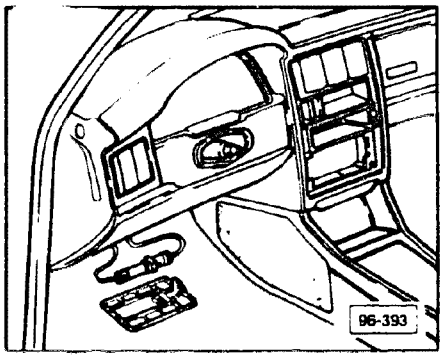

- connector color: red
- "airbag" marked on connector

CAUTION

Always disconnect the voltage supply connector when doing repairs requiring removal of parts of the airbag system.

cardiagn.com

Airbag unit, removing/installing

CAUTION

Testing, assembly and repair work on the airbag system must only be conducted by trained Service Department personnel.

The airbag is an explosive device.

- Disconnect the negative battery cable and cover the battery terminal during all work on the airbag system. Also, separate the red, single-pin connector (marked with the word "airbag") for the power supply behind the instrument panel
- Do not leave undeployed airbag units unattended if work is interrupted.
- Always place a removed airbag unit so the horn pad is facing upwards.
- The airbag unit must not be exposed to grease or cleaned with any type of cleaning agent.

Disposal of airbag and triggering units

- active airbag gas generators: Remove an active (unit which has not been deployed) airbag gas generator carefully from the vehicle, and return to the Warranty Parts Test Center for proper disposal. **DO NOT deploy in vehicle**
- deployed airbag gas generators do not have to be disposed of as a "hazardous waste" but can be disposed of with other trash, although it is recommended that for conservation reasons it be sent out with automotive metal scrap for recycling
- triggering units contain a mercury switch and must be disposed of in an approved manner

CAUTION

- Do not expose airbag units to temperatures above 100°C (212°F) even for brief periods while handling them during the repair process. Keep the airbag unit clear of heat sources such as heating plates, soldering irons, heat lamps, welding equipment and the like.
- if the airbag has been deployed during an accident, replace the triggering unit, the airbag, and the spiral spring. Check all other components for damage and replace if necessary
- the storage, transportation and disposal of airbag units are subject to the laws for flammable solids

cardiagn.com

Airbag unit, removing/installing

Removing

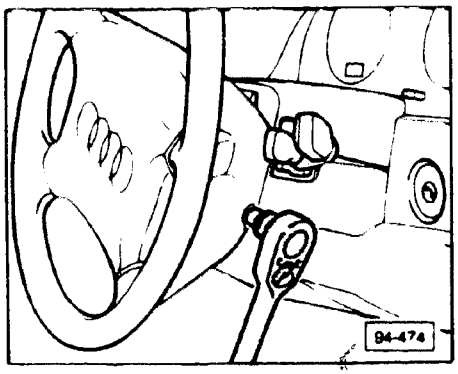

- disconnect voltage supply connector. See page 48.9
- unscrew Torx-head retaining bolts on either side of steering wheel
  - use standard Torx 30 bit

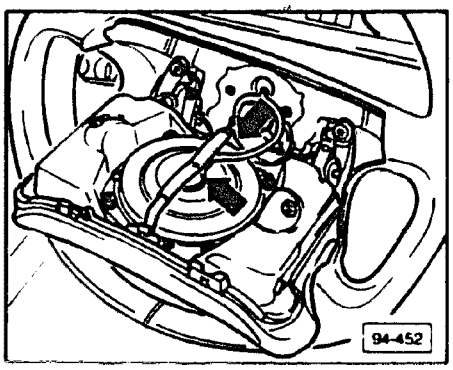

- detach airbag unit from steering wheel, carefully, and tilt downward
- lift up safety clamp (**top arrow**)
- disconnect wiring terminal (**lower arrow**) from airbag unit

> **CAUTION**
>
> DO NOT place removed airbag unit face down on vinyl horn pad side. Audi rings must be facing upward.

Installing

- connect wiring terminal to airbag unit
- position airbag unit in steering wheel
- fasten clamp securing airbag wiring terminal
- tighten Torx-head bolts
  - tightening torque: 6 Nm (53 in. lb)
- connect voltage supply connector

cardiagn.com

Disposal of active airbag unit

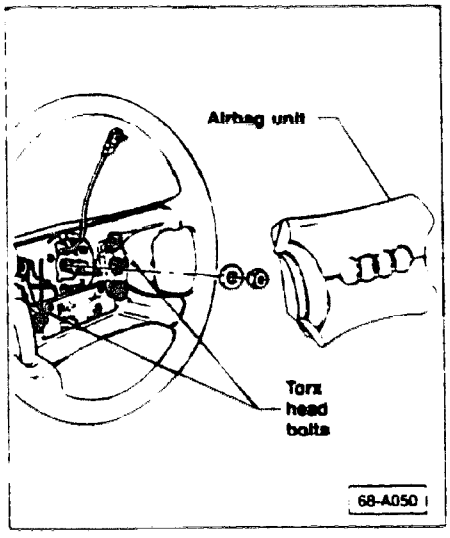

Active airbag gas generators present a potential danger. The units are classified as "Hazardous Materials" and must be disposed of in accordance with applicable regulations.

Remove an active (unit which has not been deployed) airbag gas generator carefully from the vehicle, and return to the Warranty Parts Test Center for proper disposal. For removal instructions, refer to Section 48 and 68 of the applicable Repair Manuals.

In situations where the airbag unit cannot be safely removed from the vehicle, contact your DSM.

Shipment of active airbag gas generators must be in accordance with 49 CFR 107.113 and 107.105 of the Department of Transportation (DOT) Hazardous Materials Regulations. In addition, a copy of the DOT exemption must be attached to the unit being shipped.

Note

A copy of the Department of Transportation (DOT) exemption is included with the replacement airbag unit supplied to the dealer from the Parts Depot. If exemption paper is missing, contact the Parts Depot.

Always use original box for shipping airbag unit to the Warranty Parts Testing Center.

cardiagn.com

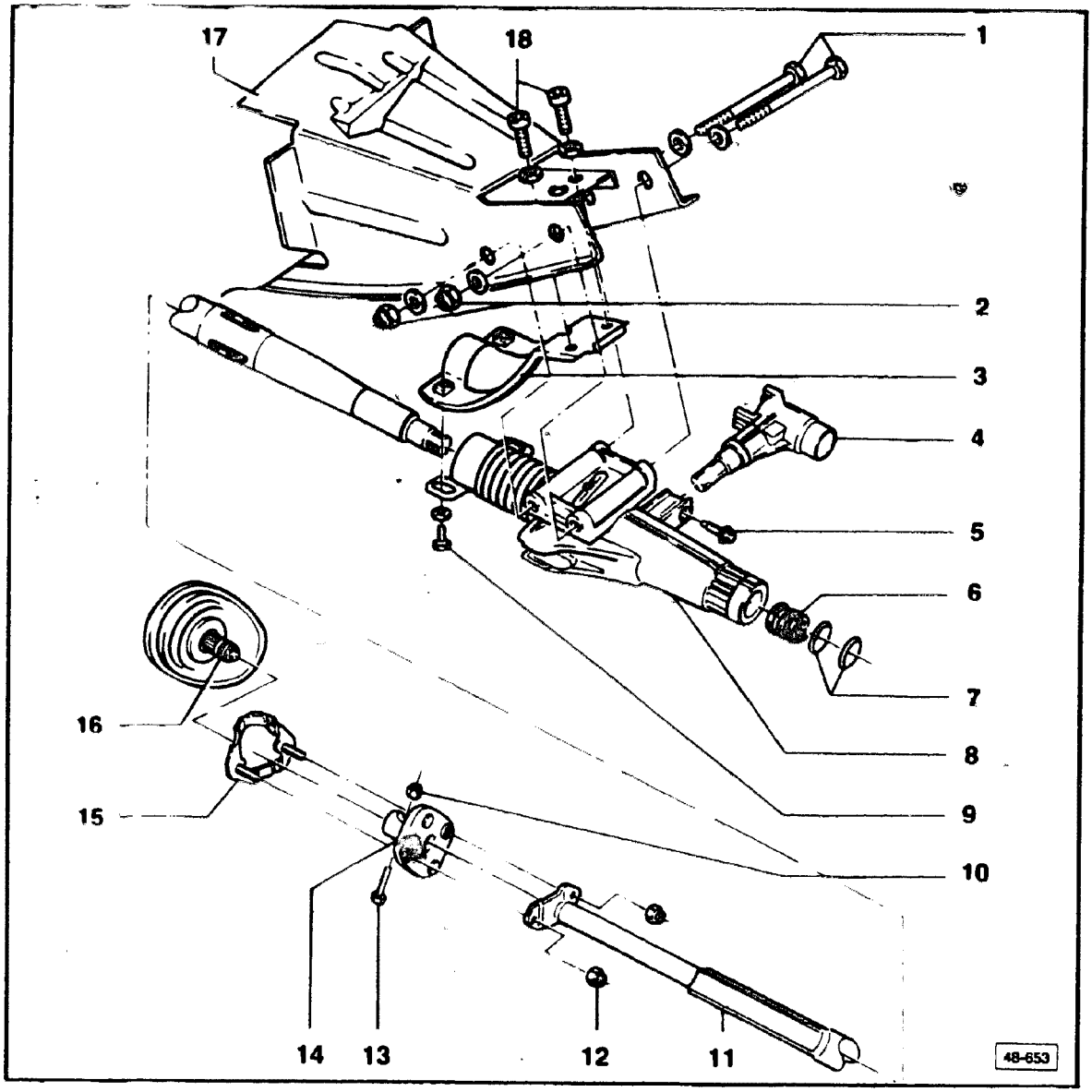

CAUTION

Always disconnect the voltage supply to the airbag system when doing repairs requiring the removal of airbag components.

Note

Beginning with the 1990 model year, all Audi 89/90/Coupe vehicles are equipped with a collapsible steering column, as well as an airbag system

1 — **Hex head bolts**

2 — **Self-locking nuts — 35 Nm (26 ft lb)**

3 — **Mounting plate**
install to the support bracket (top) and to steering column tube (bottom)

4 — **Steering lock housing**
- position at steering column tube and fasten
- connect to ignition wiring connector
- see Repair Group 94

5 — **Torx bolt — 7 Nm (62 in. lb)**

6 — **Spring**
install on steering column (see page 48 18)

cardiagn.com

7 — **Lock washers**
- removing: grind down (carefully), then pry out with screwdriver

> **CAUTION**
>
> Grinding may create sparks. Protect instrument panel and windshield.
>
> Note during removal that washers are pre-tensioned.

- installing, page 48.18

8 — **Steering column tube**
- consists of upper and lower sections

> **CAUTION**
>
> Upper and lower sections of column tube have a red dot. Always replace the column tube if the red dot is worn or sheared off.
>
> If any play exists between upper/lower sections, replace column tube. Inspect for play, when repairing accident damage.

- the following may loosen upper/lower section connection:
  lubricants, solvents, temperatures over 100°C (212°F)
- do not hammer any part of the steering column
- bearing included as replacement part

9 — **Hex head bolt — 25 Nm (18 ft lb)**

10 — **Self-locking nut — 25 Nm (18 ft lb)**
always replace

11 — **Steering column, collapsible**
- removing/installing, page 48.14
- install up to stop, on column tube
- install free of strain

12 — **Self-locking nut — 25 Nm (18 ft lb)**

13 — **Bolt**
always replace

14 — **Flange tube**
- to install, slide onto steering pinion and bolt to steering column and retaining bracket
- as replacement part, has coupling disc riveted on

15 — **Retaining bracket**

16 — **Steering pinion**

17 — **Support bracket**

18 — **25 Nm (18 ft lb)**

cardiagn.com

Steering column, collapsible, removing/installing

Removing

- disconnect battery ground cable to disable airbag system
- place front road wheels in straight-ahead position
- remove airbag unit. See page 48.10
- remove fasteners (**arrows**) retaining cover for steering column switch assembly

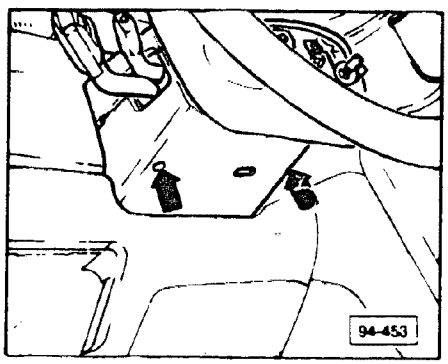

- disconnect airbag connector
  - located behind steering column switch cover
  - using screwdriver, press tab (**arrow**) on edge of casing
- remove steering wheel. See page 48.7

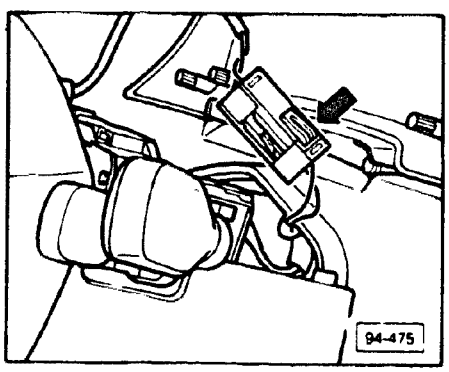

- loosen clamp on steering column switch and remove switch

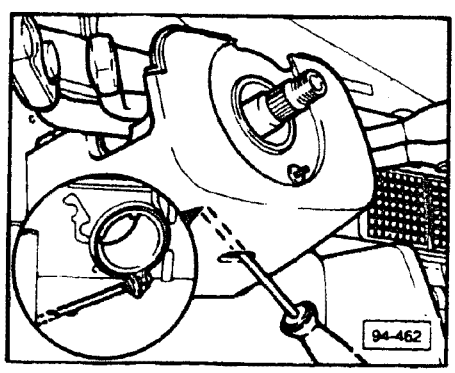

cardiagn.com

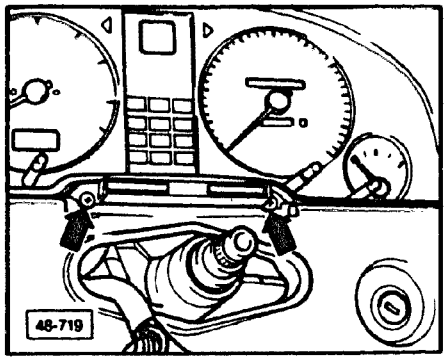

- remove screws (**arrows**) retaining instrument cluster
- disconnect and remove cluster assembly. See Repair Group 90
- disconnect ignition wiring terminal from lock assembly

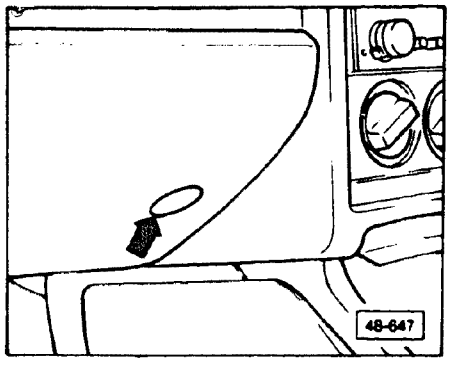

- unfasten knee bar (four bolts)
  - pry out capping (**arrow**)
- unclip diagnostic connectors from knee bar
  - position connectors aside
- remove knee bar

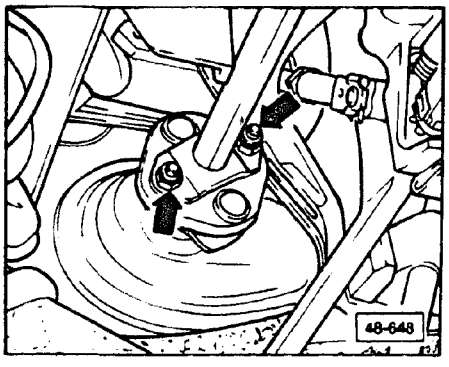

- detach base of steering column (**arrows**) from retaining bracket
- pry steering column away from boot, carefully
  - using screwdriver (approximately 15 mm)

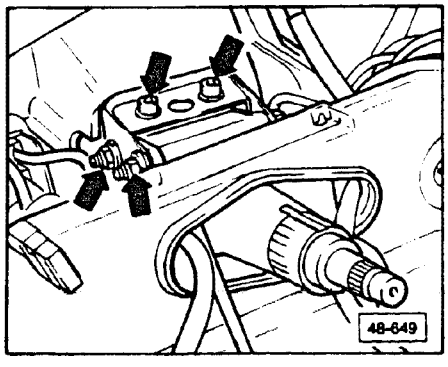

- remove fasteners (**arrows**) securing column tube mounting plate to mounting bracket

cardiagn.com

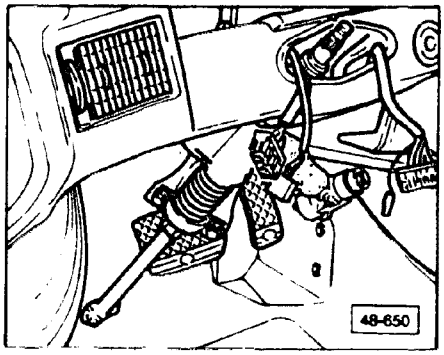

- push steering column downward, turning assembly until it can be removed from beneath instrument panel

Installing

- insert column assembly, from below, up through instrument panel
- position column assembly/mounting plate at mounting bracket. Insert bolts
- insert ignition key in ignition lock for steering column
- unlock steering column lock so that column can be turned as needed
- clamp base of steering column against flange tube and retaining bracket, using pliers. Bolt together

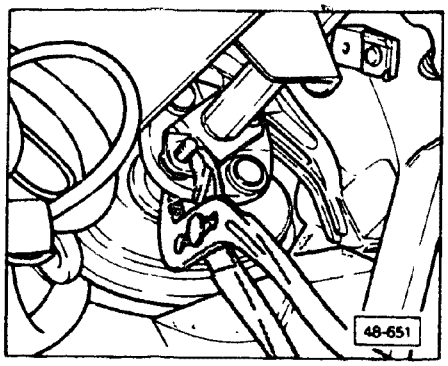

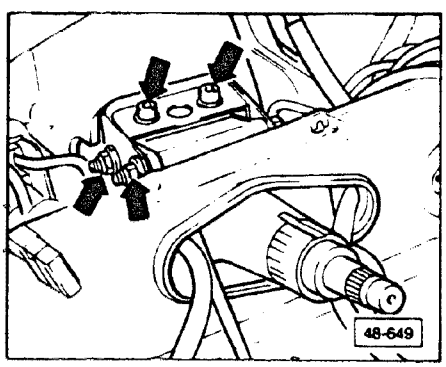

- tighten mounting hardware (**arrows**) for column assembly and bracket
- connect ignition wiring terminal to steering lock assembly

cardiagn.com

Note

For procedures to install spring and new lock washers, see page 48.18.

- install instrument cluster
- connect airbag wiring
- install steering column switch and cover
- install steering wheel. See page 48.7

CAUTION

Do not place any stickers or covering on a steering wheel equipped with an airbag.

Note

Steering wheel must be centered, when front wheels are in a straight-ahead position

- connect battery ground cable
- check function of steering column switch
- position wiring behind knee bar panel and install panel

cardiagn.com

Lock washers/spring for collapsible steering column, pressing on

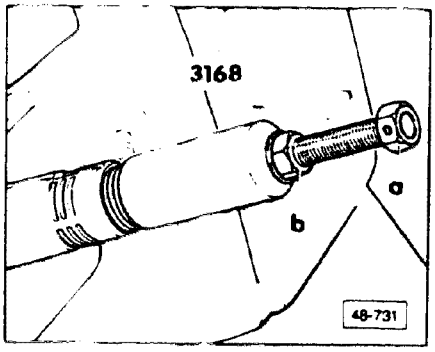

- install spring onto steering column
- place new lock washers on column
- install tensioner **3168** onto steering column up to stop (i.e. nut **b** threaded down)
- hold spindle **a** while tightening nut **b** until spring is compressed

> **CAUTION**
>
> Do not over-tighten spring, or bearing damage could result.

- loosen nut **b**
- remove tool from steering column

cardiagn.com

Note

Do not attempt to weld or straighten steering components

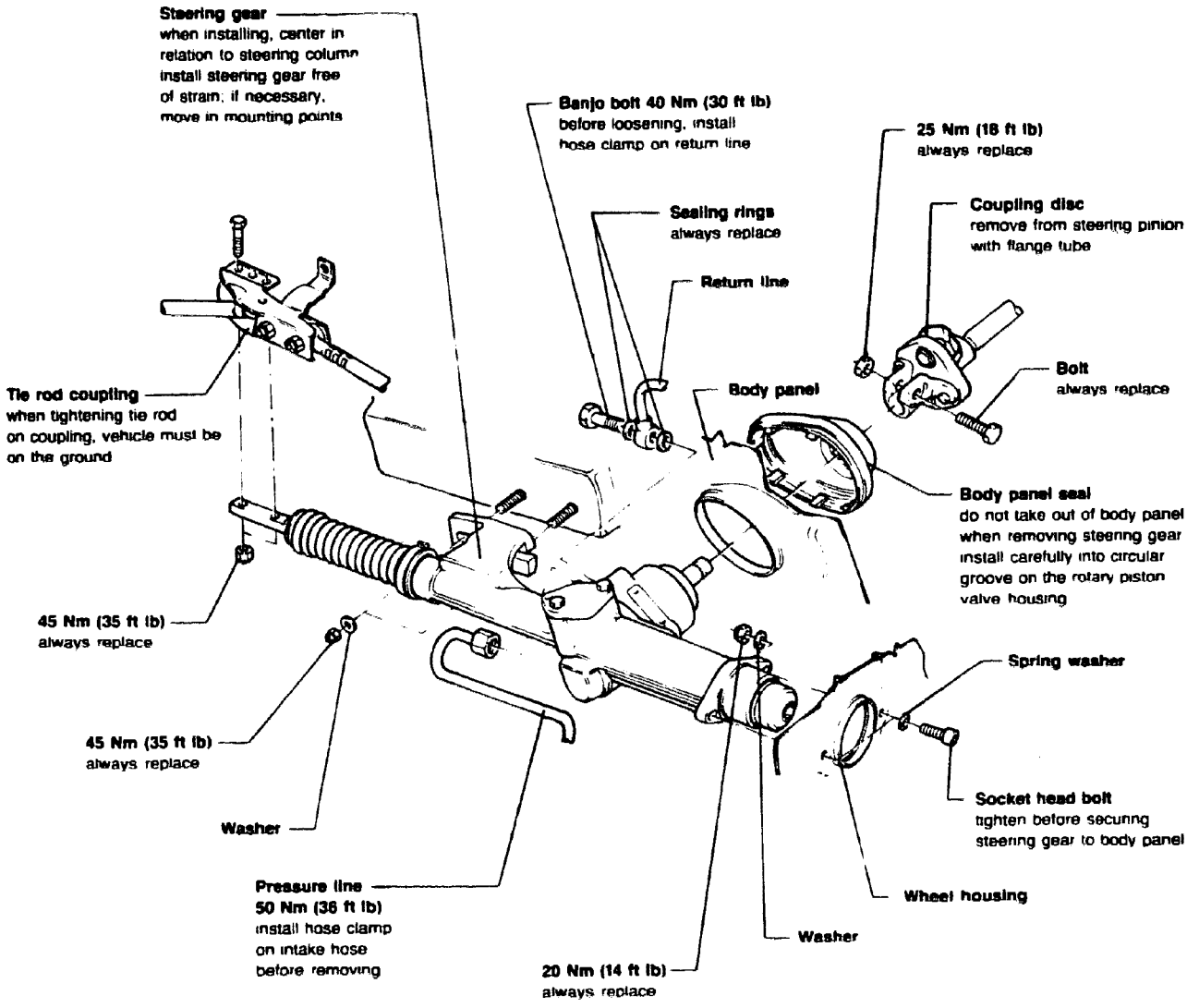

cardiagn.com

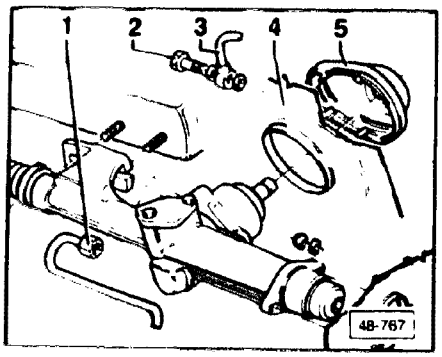

Pressure/return hoses, replacing

(vehicles with automatic seat belt tensioning system)

Note

This procedure must also be used when removing/installing steering gear

- pry off dash panel boot **5** and push into passenger compartment
- remove lower left trim from instrument panel
- move dash panel boot **5** to allow access to banjo bolt **2**, return line hose **3**, and pressure hose connection **1**
- remove and attach pressure/return line connections as necessary
- check connections for leakage on reassembly
- install dash panel boot

cardiagn.com

CONTINUED IN THE

BEGINNING OF NEXT ROW

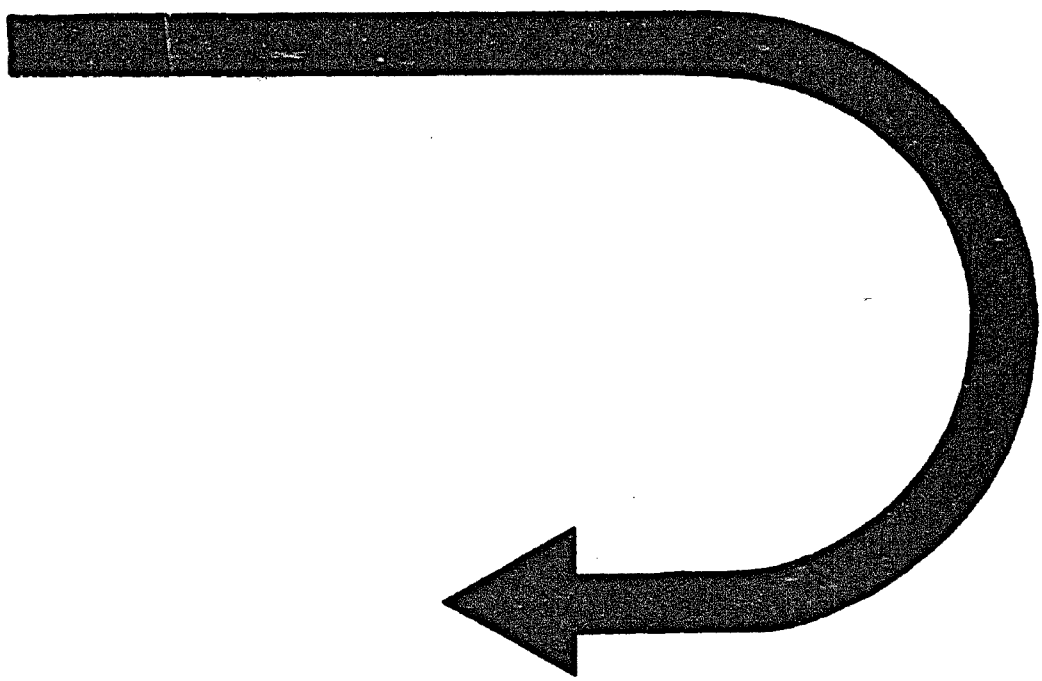

cardiagn.com

Note

The power steering system is filled with hydraulic oil Part No. G 002 000

All components marked with an astensk are included in the repair kit and should be renewed in the course of repair work

CAUTION

Moisten all seals with hydraulic oil before installing

Do not attempt to weld or straighten steering components.

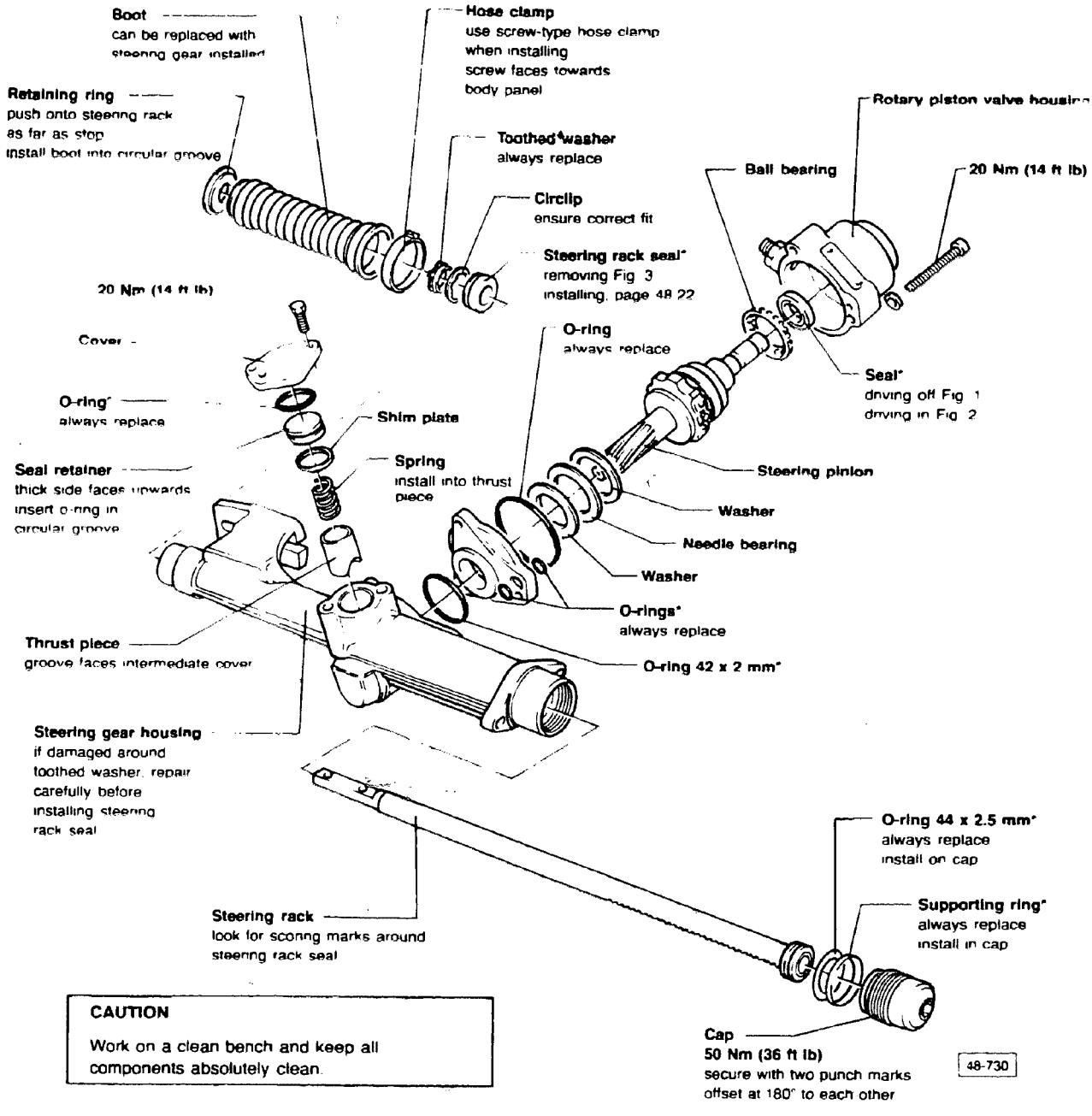

CAUTION

Work on a clean bench and keep all components absolutely clean.

cardiagn.com

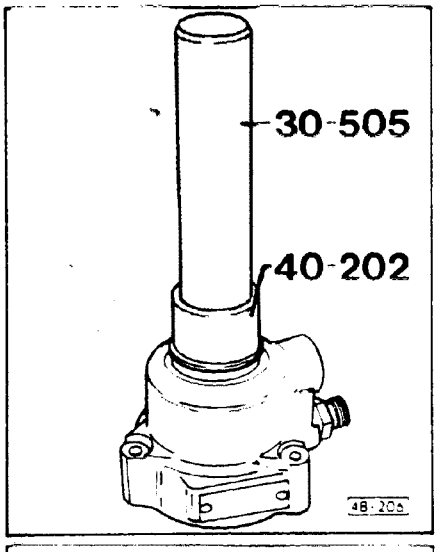

▶ **Fig. 1 Valve housing seal, driving out**

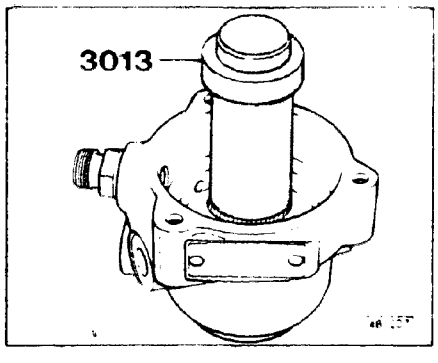

▶ **Fig. 2 Valve housing seal, driving in**

- sealing lip faces steering pinion

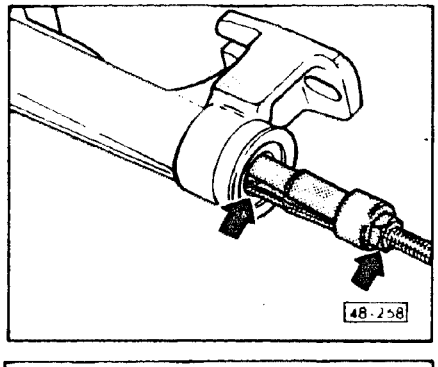

▶ **Fig. 3 Steering rack seal, removing**

Use internal puller **US 1088** (Kukko 21/3)

- install puller in sealing lip

Note

After pulling out the rack seal, repair any damage to the steering gear housing caused when removing the toothed washer.

Steering rack seal, installing

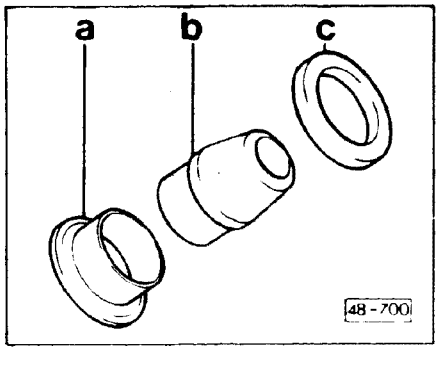

▶ **Note**

Before installing, moisten all parts of mounting sleeve and steering rack seal with hydraulic oil. Every new repair kit is supplied with a mounting sleeve.

The mounting sleeve consists of the parts **a**, **b** and **c**.

cardiagn.com

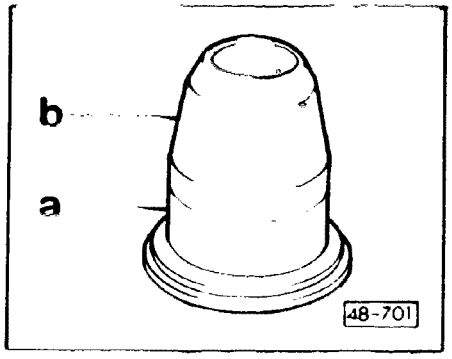

- insert part **b** of mounting sleeve into part **a** (put parts on a flat surface)

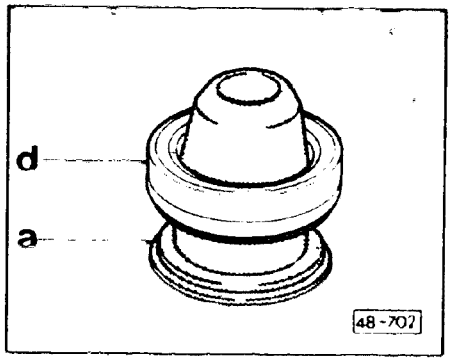

- slide steering rack seal **d** onto mounting sleeve. (The metal side faces towards the collar of the mounting sleeve **a**)

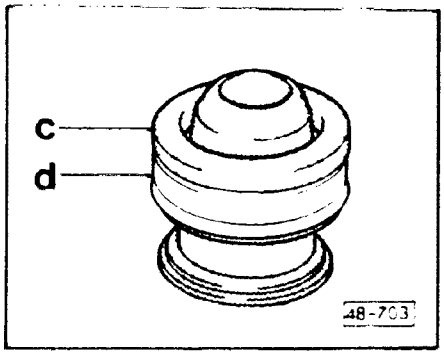

- fit part **c** of mounting sleeve onto steering rack seal
- press steering rack seal **d** fully down with part **c** of mounting sleeve

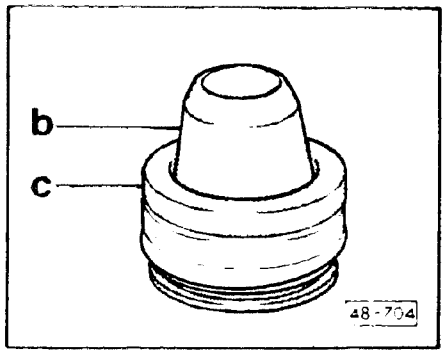

- remove parts **c** and **b** of mounting sleeve

cardiagn.com

- clean end of steering rack thoroughly before pushing on the seal (use a polishing cloth)
- moisten steering rack with hydraulic oil
- only apply pressure to mounting sleeve

  The excess length of the mounting sleeve (a) in relation to the steering rack seal (d) must be visible (**arrow**)
- grease steering rack seal lightly on the outside with multi-purpose grease

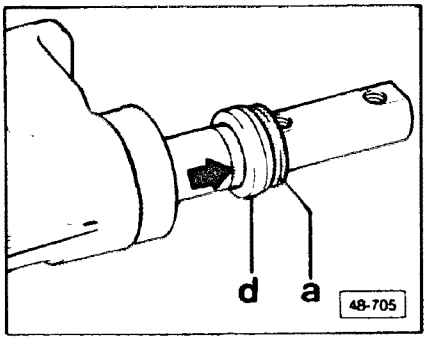

- use mounting sleeve **a** to push steering rack seal onto steering rack

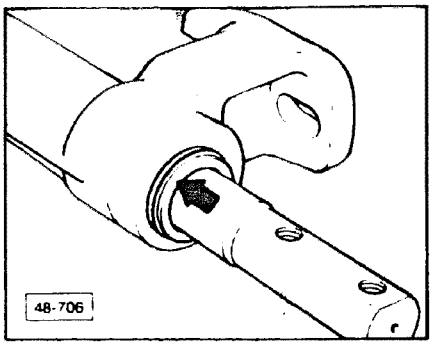

- remove mounting sleeve **a**
- push steering rack seal onto steering gear housing

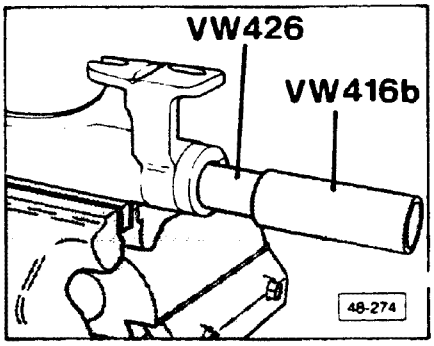

- drive steering rack seal into steering housing to stop
- install circlip
- install toothed washer with the teeth facing outward

cardiagn.com

Note

Beginning with vehicle VIN 89 JA 413 628 an adjustable steering gear is installed

Beginning with vehicle VIN 89 JA 413 628 use repair kit Part No 811 498 020 B

When repairing steering gears on vehicles up to VIN 89 JA 413 627 O rings for valve housing are not used

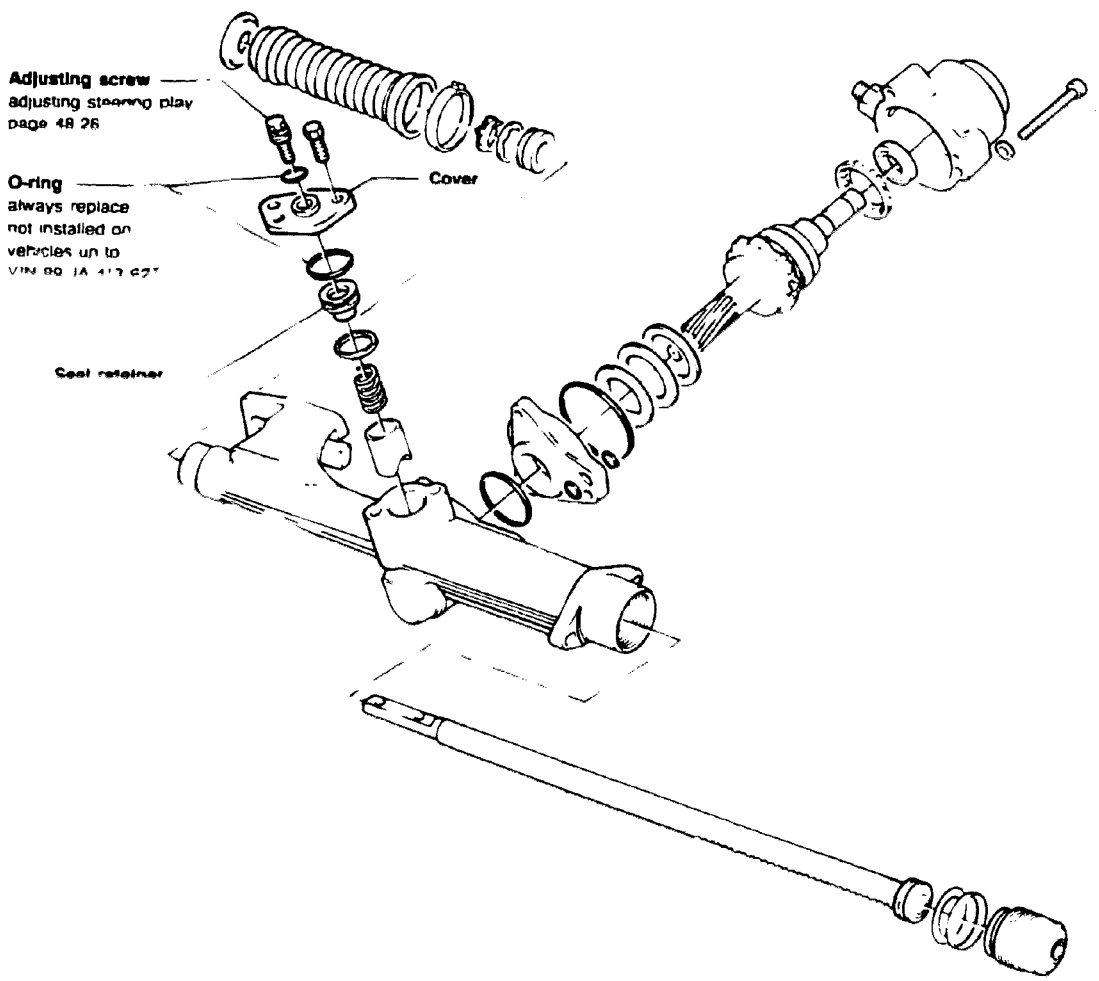

48-630

cardiagn.com

Steering play, adjusting

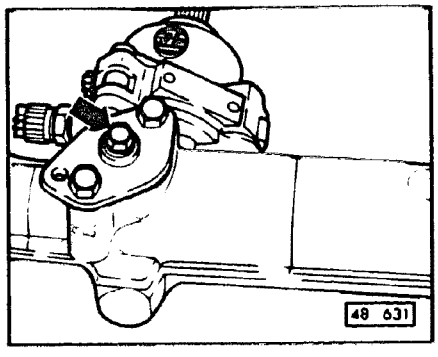

Two mechanics are necessary to do the following adjustment. Adjust the steering play with the engine off and the vehicle on the ground. The wheels must be in the straight-ahead position.

- move steering wheel back and forth approx. 30° from center position and listen for rattling and popping noises from steering gear
- second mechanic turns adjusting screw **(arrow)** clockwise until rattling and popping noises are not heard inside vehicle
- conduct test drive and readjust if necessary

cardiagn.com

Note

The power steering system is filled with hydraulic oil
Part No. G 002 000

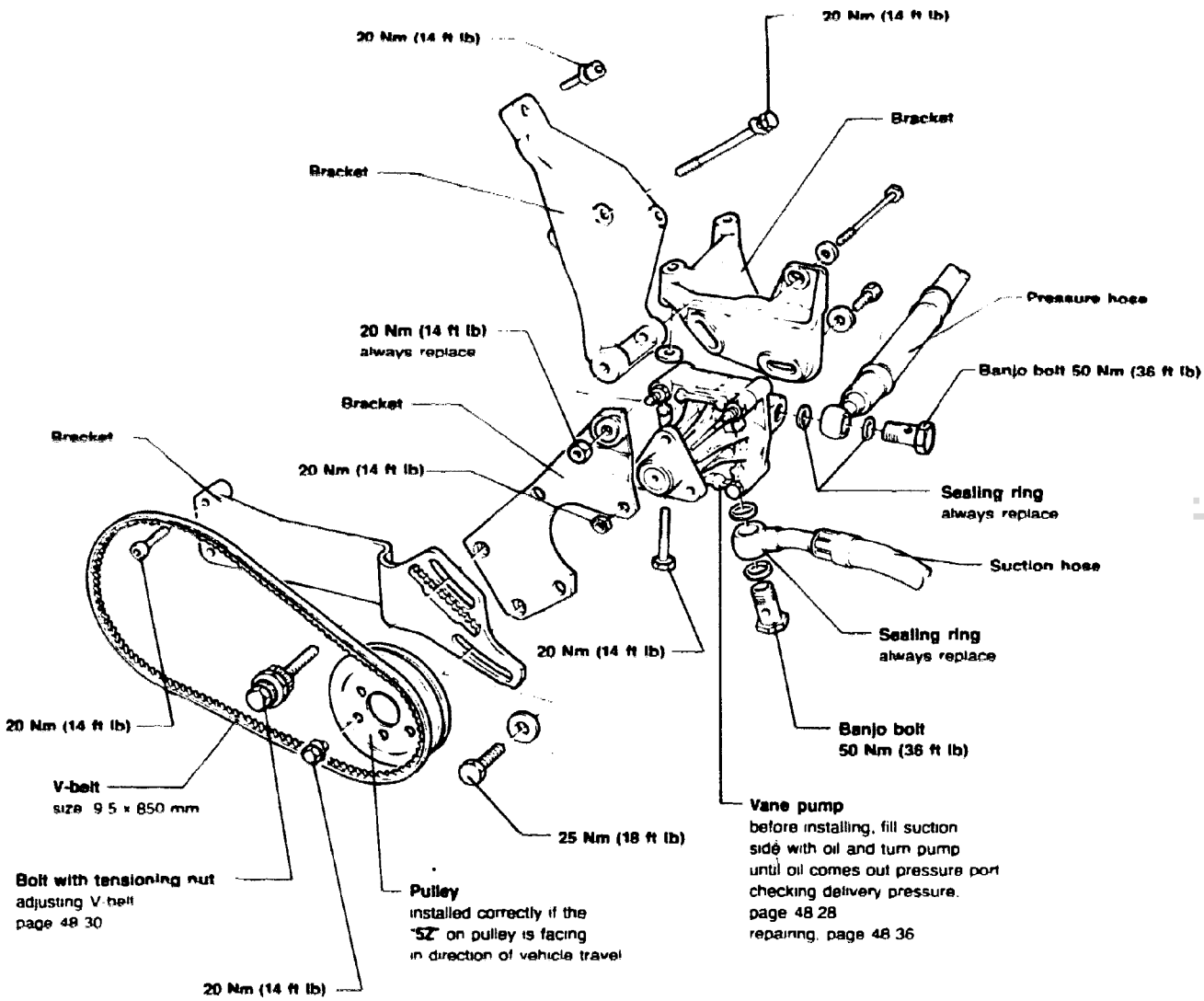

cardiagn.com

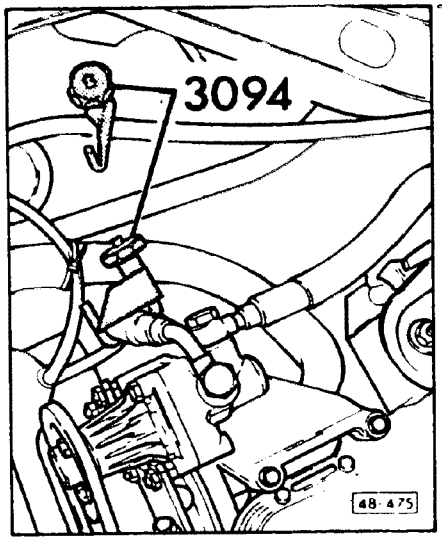

Pump delivery pressure, checking (4-cylinder engine)

- install hose clamps **3094** to return and suction hoses

Note

Use clamping pliers and carefully close off lines if hose clamps **3094** are unavailable

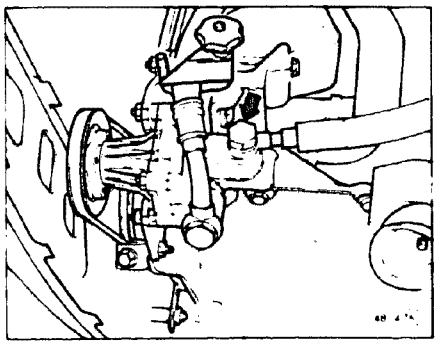

- remove pressure hose from pump (**arrow**)

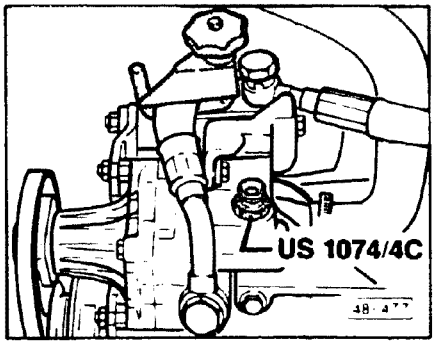

- remove copper sealing ring from banjo bolt and install onto adaptor **US 1074/4C**
- thread adaptor into pump

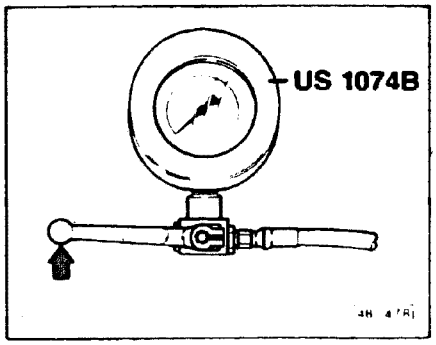

- close valve of pressure gauge (**arrow**)
- route hose of pressure gauge downward to pump

cardiagn.com

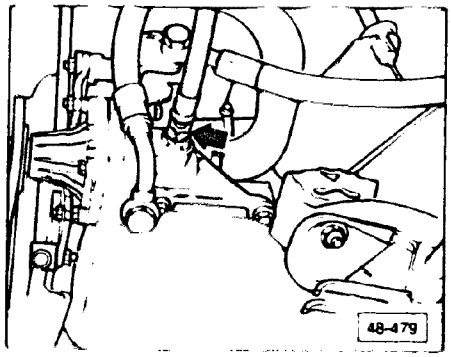

- thread hose of pressure gauge onto adapter (**arrow**)
- remove hose clamps from suction and return hoses
- start engine
- at idle, read pump pressure at pressure gauge (measure not longer than 10 seconds)
  - 100-110 bar (1450-1595 psi)
- turn off engine

Note

If the specified reading is not obtained, check pressure and flow limiting valve, page 48.38

- install hose clamps **3094** (or clamping pliers) on suction and return hoses
- remove hose of pressure gauge from adapter and put pressure gauge to one side
- remove adapter from pump
- install pressure hose with banjo bolt and new sealing rings on pump
- remove hose clamps from return and intake hoses

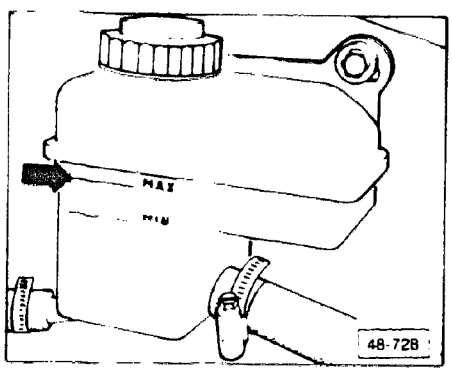

- run engine at idle with front wheels in straight-ahead position for approximately 2 minutes
- turn engine **OFF** and immediately check level of fluid in reservoir; if necessary, top up with hydraulic oil to **MAX** mark
- check steering system for leaks

cardiagn.com

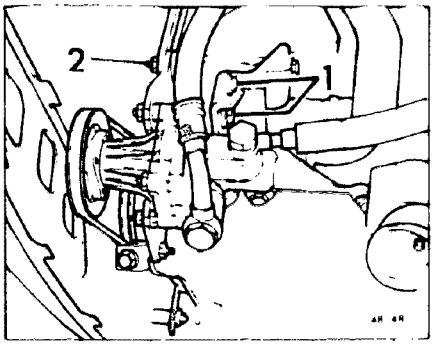

V-belt, adjusting

- loosen bolts 1

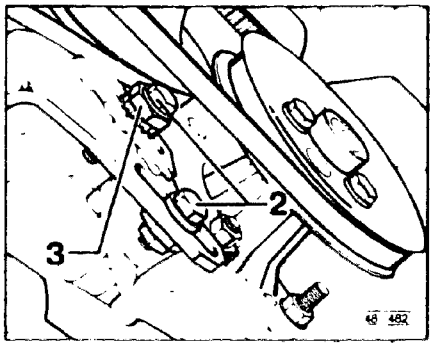

- loosen bolts 2
- turn nut 3 on tensioner to tighten belt

Note

Belt tension is correct if the belt can be depressed about 10 mm (3/8 in) half way between the two pulleys

- tighten bolts

cardiagn.com

Note

The power steering system is filled with hydraulic oil
Part No. 0 992 000

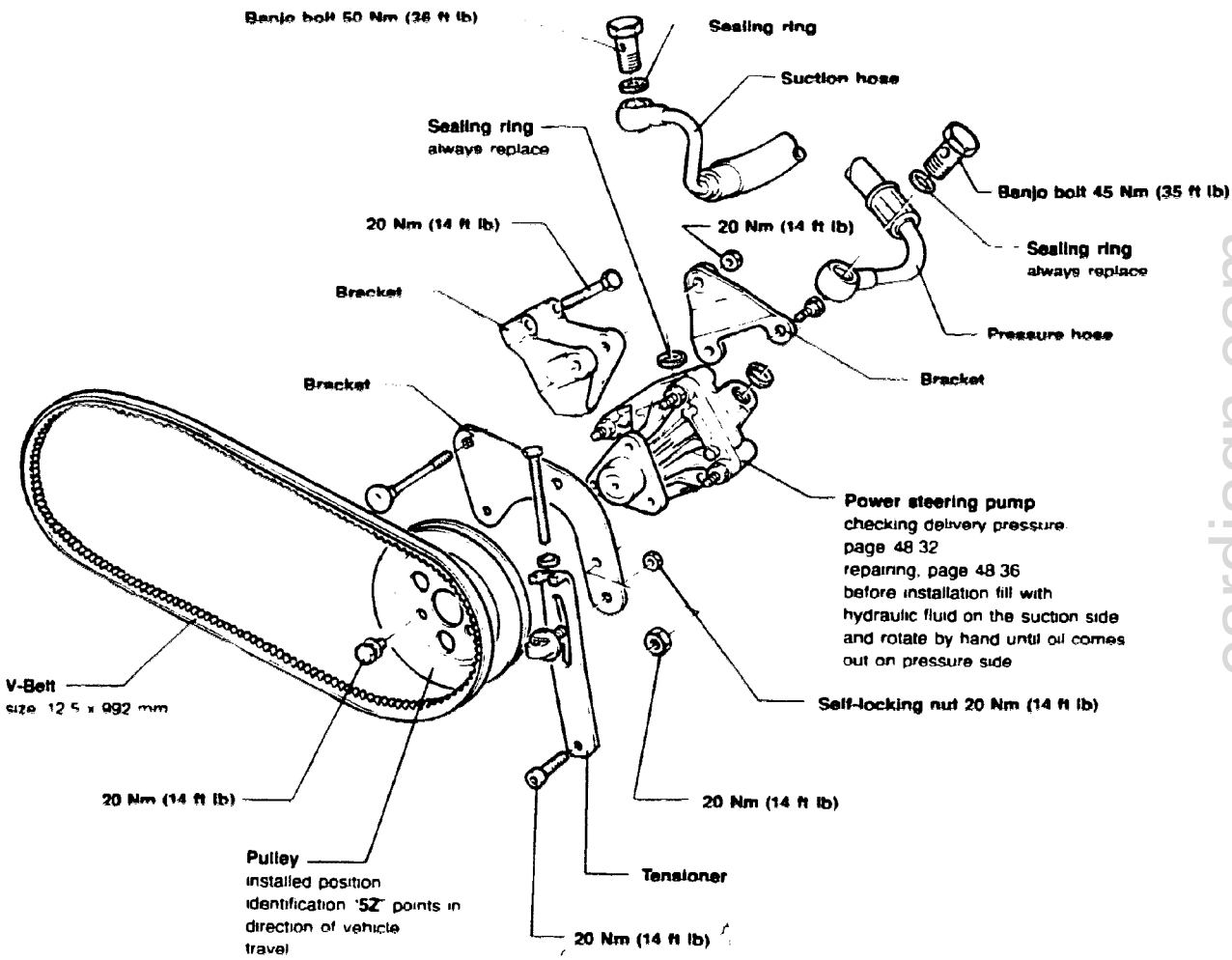

cardiagn.com

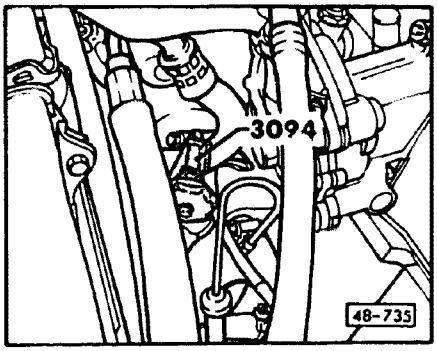

Pump pressure, checking (5-cylinder engine)

- install hose clamp **3094** to suction hose

Note

Use clamping pliers to carefully close off hose if clamp **3094** is unavailable

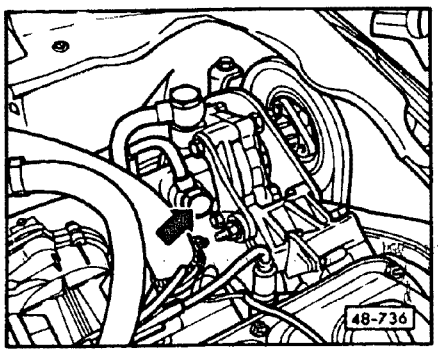

- remove pressure hose from pump (**arrow**)
- remove copper sealing ring from banjo bolt and place onto adaptor **US 1074/4C**

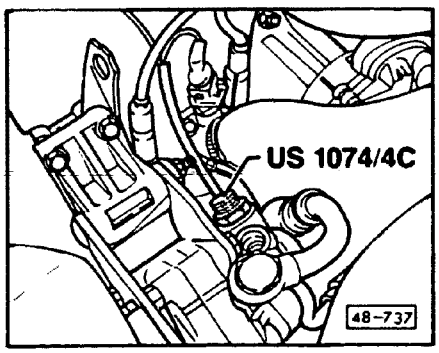

- thread adapter into pump

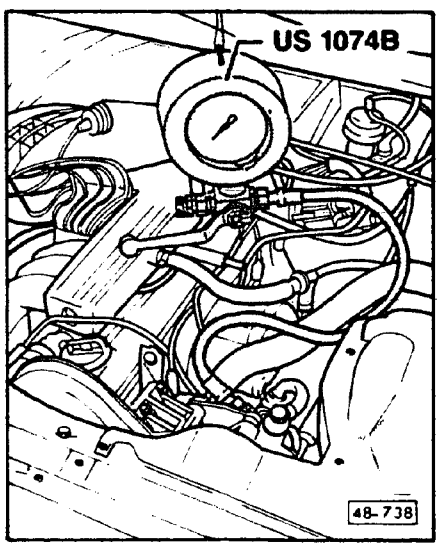

- close shut-off valve of pressure gauge
- attach pressure hose to gauge
- remove hose clamp from suction hose
- start engine
- at idle speed read pump pressure on gauge (keep valve closed with engine running no longer than 10 seconds)
  - specification: 100-110 bar (1450-1595 psi)
- turn off engine

cardiagn.com

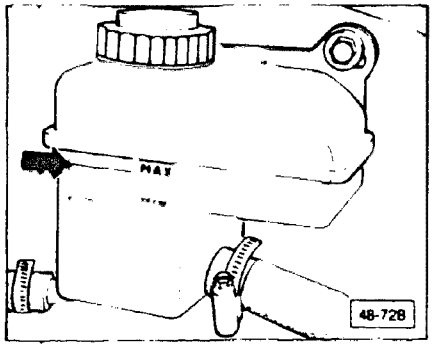

Note

If the specified pressure is not attained, check pressure and flow limiting valve, page 48.38.

- place hose clamp **3094** (or clamping pliers) on suction hose
- remove pressure gauge from pump
- install pressure hose to pump using banjo bolt with new sealing rings
- remove hose clamp from suction hose
- run engine at idle with front wheels in straight-ahead position for approximately 2 minutes
- turn engine **OFF** and immediately check fluid level in reservoir; if necessary top up with hydraulic oil to **MAX** mark
- check steering system for leaks

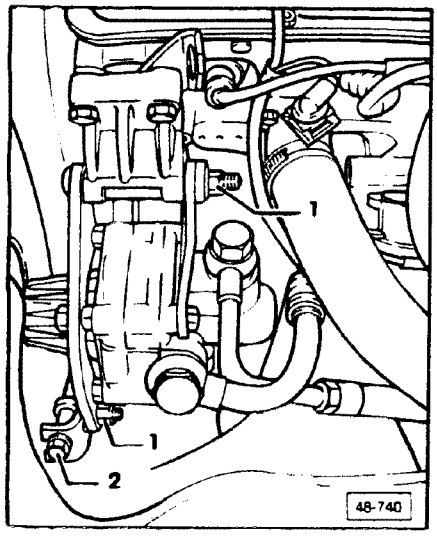

V-belt, replacing/tightening (5-cylinder engine)

- loosen nuts **1**
- turn bolt **2** of adjuster as required
- belt tension is correct if the belt deflects about 10 mm (3/8 in.) when pressed with thumb half-way between the two pulleys
- tighten nuts **1**

cardiagn.com

Note

The power steering system is filled with hydraulic oil
Part No. G 002 000

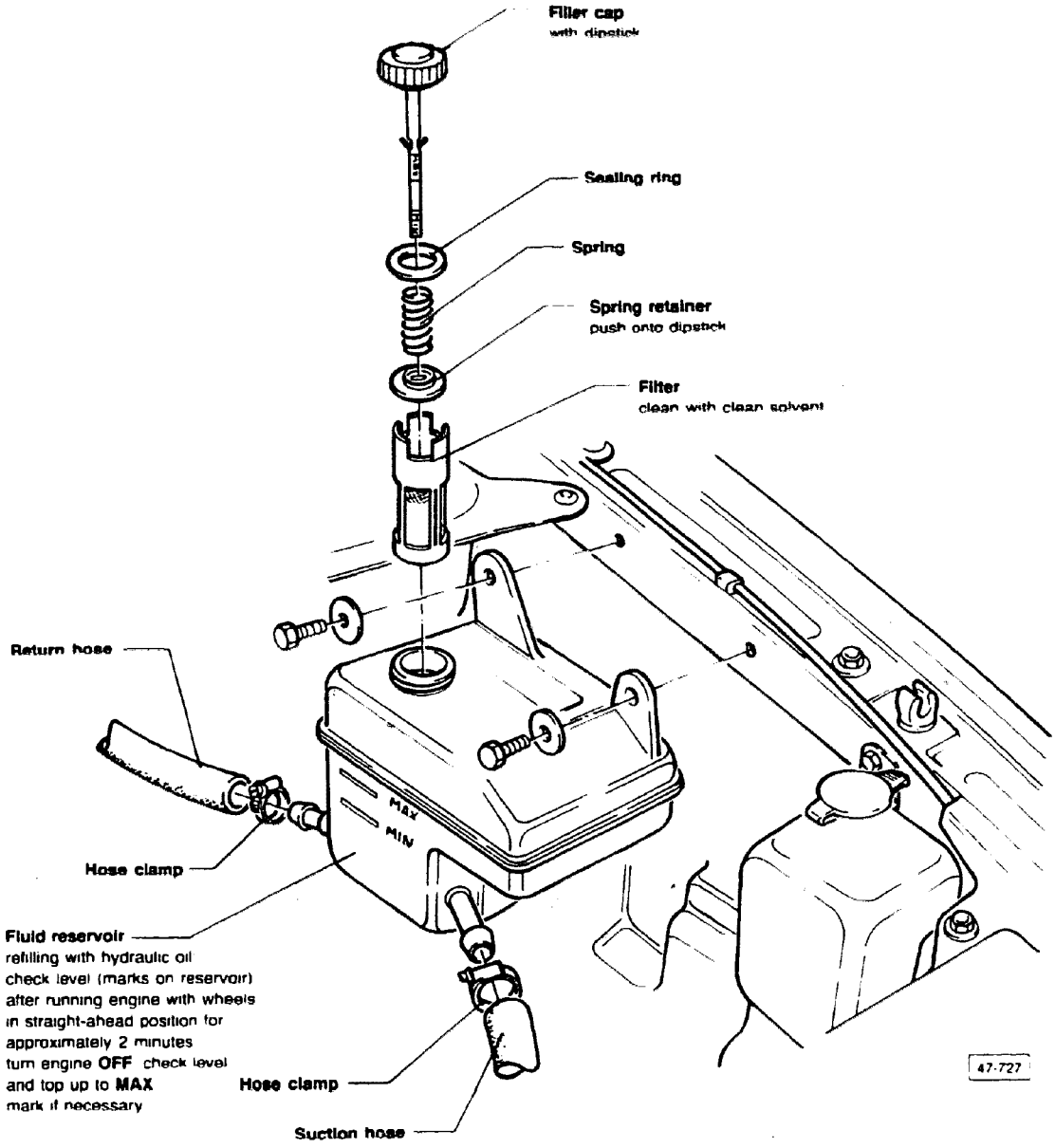

cardiagn.com

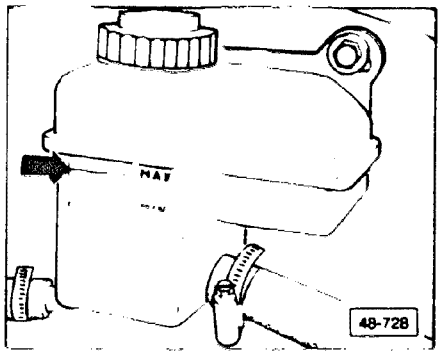

Steering system, bleeding/filling

CAUTION

Do not reuse drained hydraulic oil.

- top up hydraulic oil to **MAX** mark
- with vehicle jacked up and engine off, turn steering wheel sharply from lock to lock several times to enable air to escape
- top up hydraulic oil to **MAX** marking
- start engine and let idle for approximately 2 minutes with wheels in straight-ahead position
- watch fluid level
- as soon as there are no rising bubbles in reservoir, turn engine **OFF** and immediately check oil level; if necessary top up with hydraulic oil to **MAX** mark

Note

The steering system will bleed itself after some time once the engine is running

Steering system, checking for leaks (with engine running)

Note

If the fluid level in the reservoir is low, the complete system must always be checked for leaks.

- turn the steering wheel to full lock in each direction and hold briefly in this position in order to build up maximum pressure in the connecting lines
- with the steering wheel at full lock carry out the following visual checks for leaks:
  - rotary piston valve
  - steering rack seal (remove hose clamp on boot and push boot to one side)
  - pump
  - hose connections

cardiagn.com

Note

All components marked with an asterisk are included in the repair kit and should be replaced during repairs

CAUTION

Moisten all seals with hydraulic oil before installation.

CAUTION

Retainer is pre-tensioned with spring.

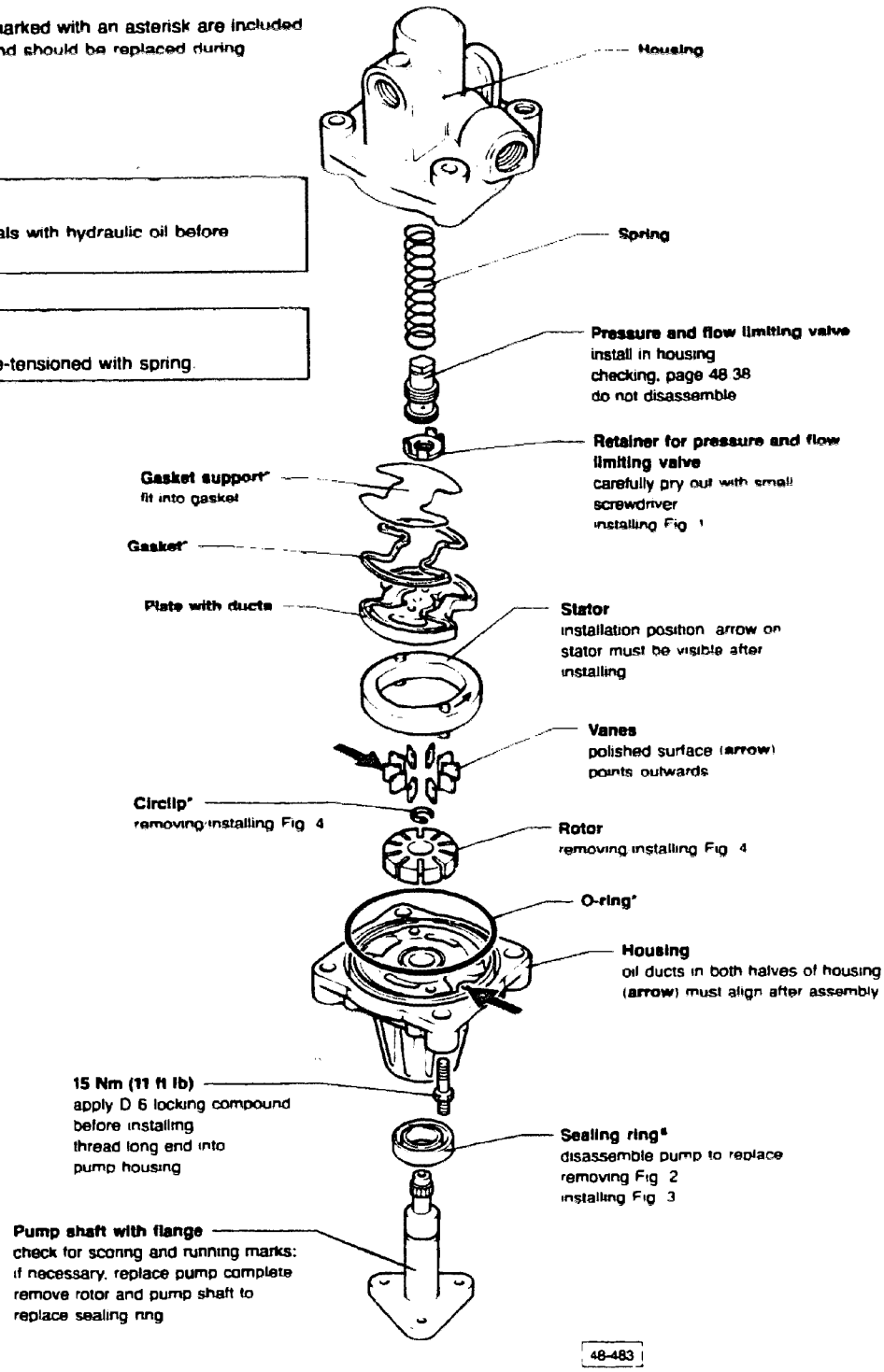

cardiagn.com

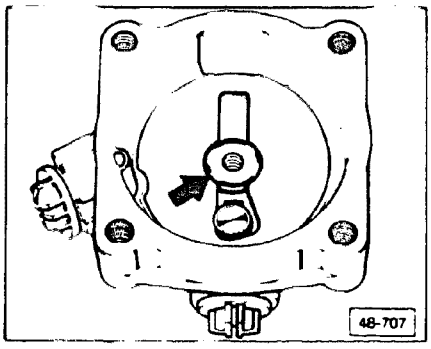

▶ **Fig. 1 Retainer for pressure and flow limiting valve, installing**

- press in flush to edge of hole in housing

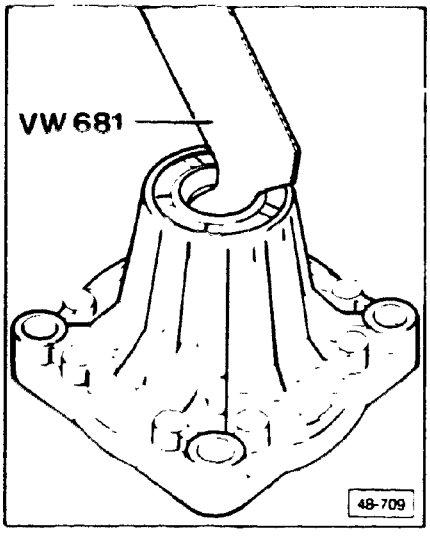

▶ **Fig. 2 Sealing ring, removing**

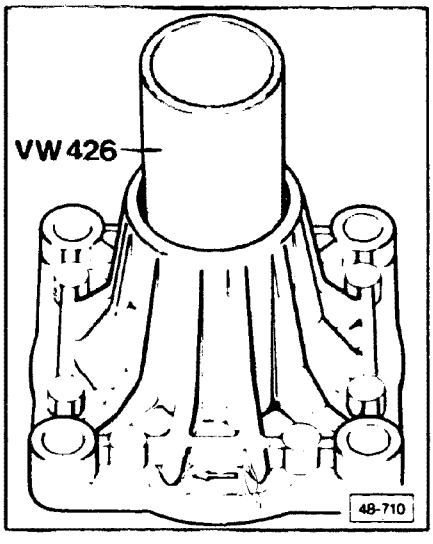

▶ **Fig. 3 Sealing ring, installing**

- fill space between sealing lips with multi-purpose grease

cardiagn.com

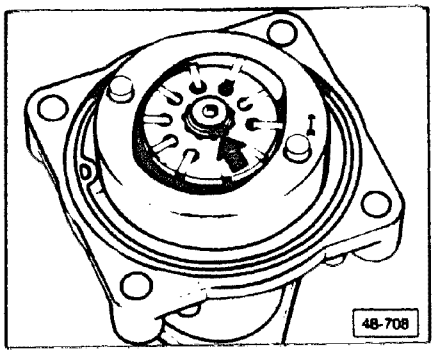

▶ Fig. 4 **Rotor, removing/installing**

- use long-nosed pliers to remove circlip from groove
- remove rotor

Pressure and flow limiting valve, checking

CAUTION

If the pressure and flow limiting valve is not working properly, this will cause intermittent failure of the power steering.

- check valve piston and bore in pump housing for wear
  - holes in valve piston must not be obstructed by dirt
  - piston must move freely in bore

Note

If maximum pump pressure still cannot be obtained after this test, the pump must be replaced

cardiagn.com

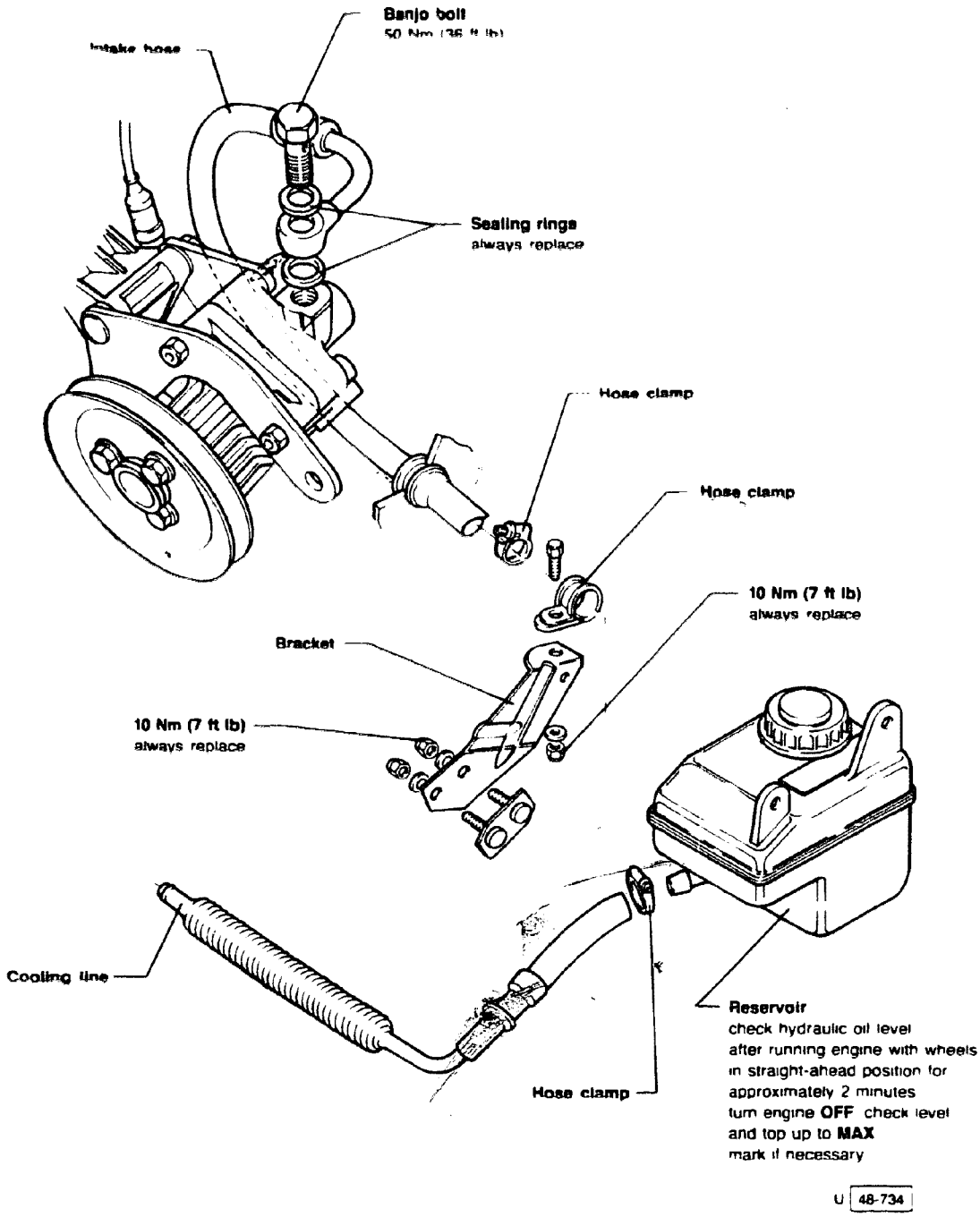

cardiagn.com

CONTINUED IN THE

BEGINNING OF NEXT ROW

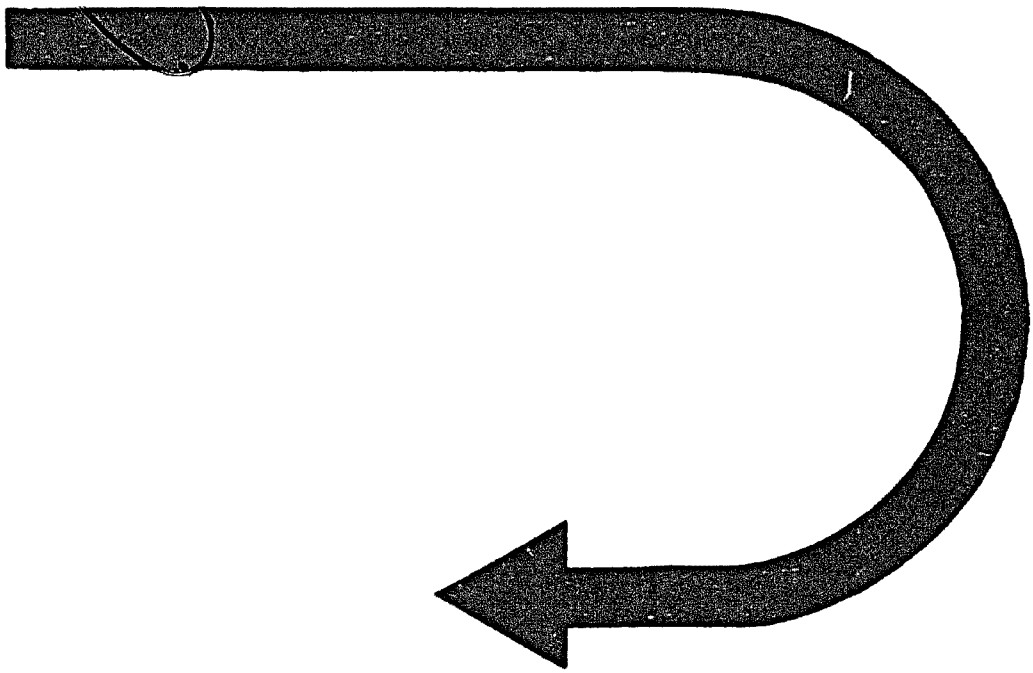

cardiagn.com

Technical data

Vehicle	Audi Coupe
Wheelbase	2548.5 mm (100.335 in.)
Track at curb weight front/rear	1453 mm (57.204 in.)/ 1437 mm (56.575 in.)
Wheel lock angle, inner, at curb weight	37° 20′
Wheel lock angle, outer, at curb weight	33° 25′
Steering wheel turns lock to lock	3.2
Total steering ratio	16.8:1
Power steering fluid capacity	approximately 1.9 liters (2.0 US qt)

cardiagn.com

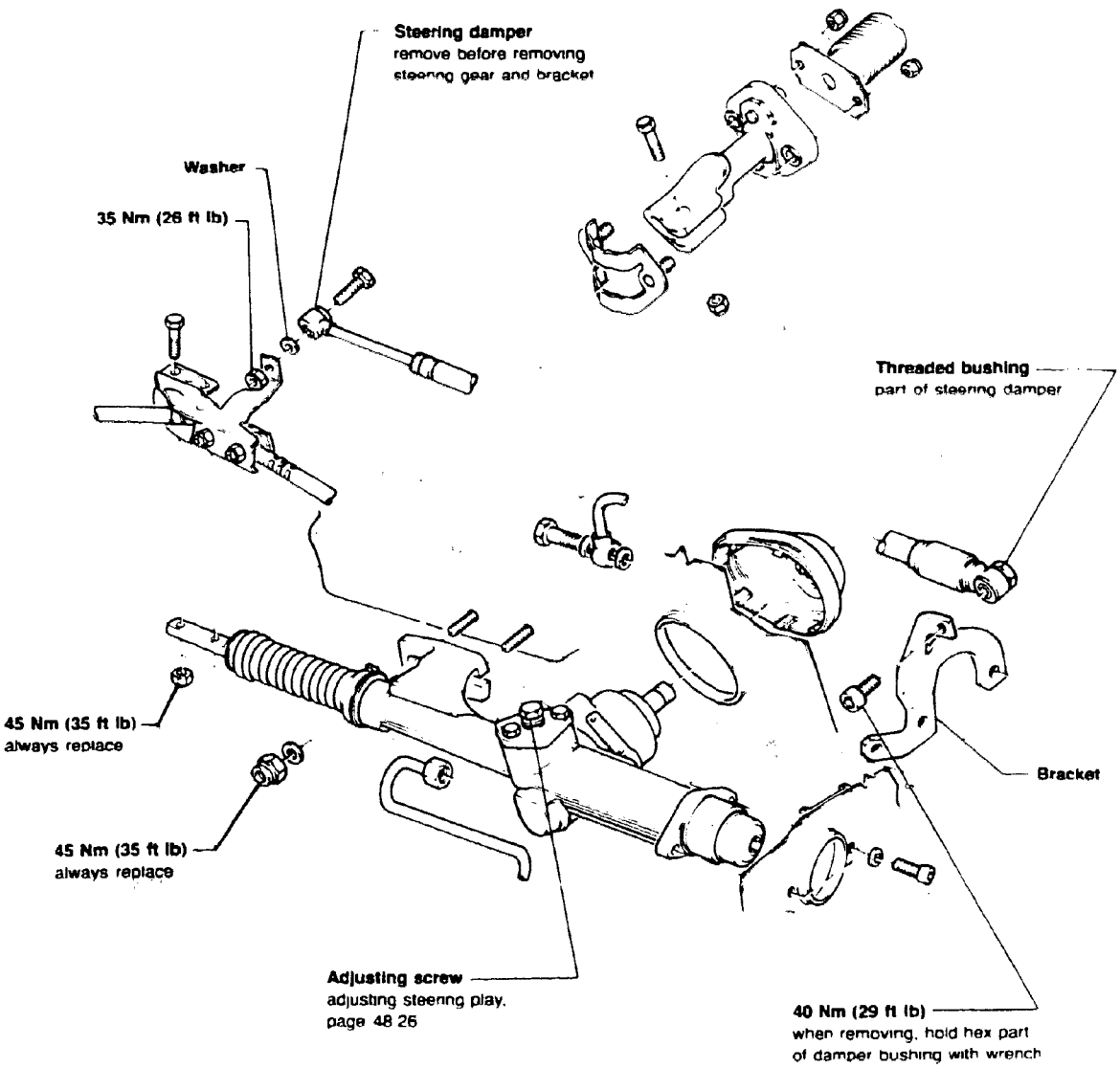

cardiagn.com

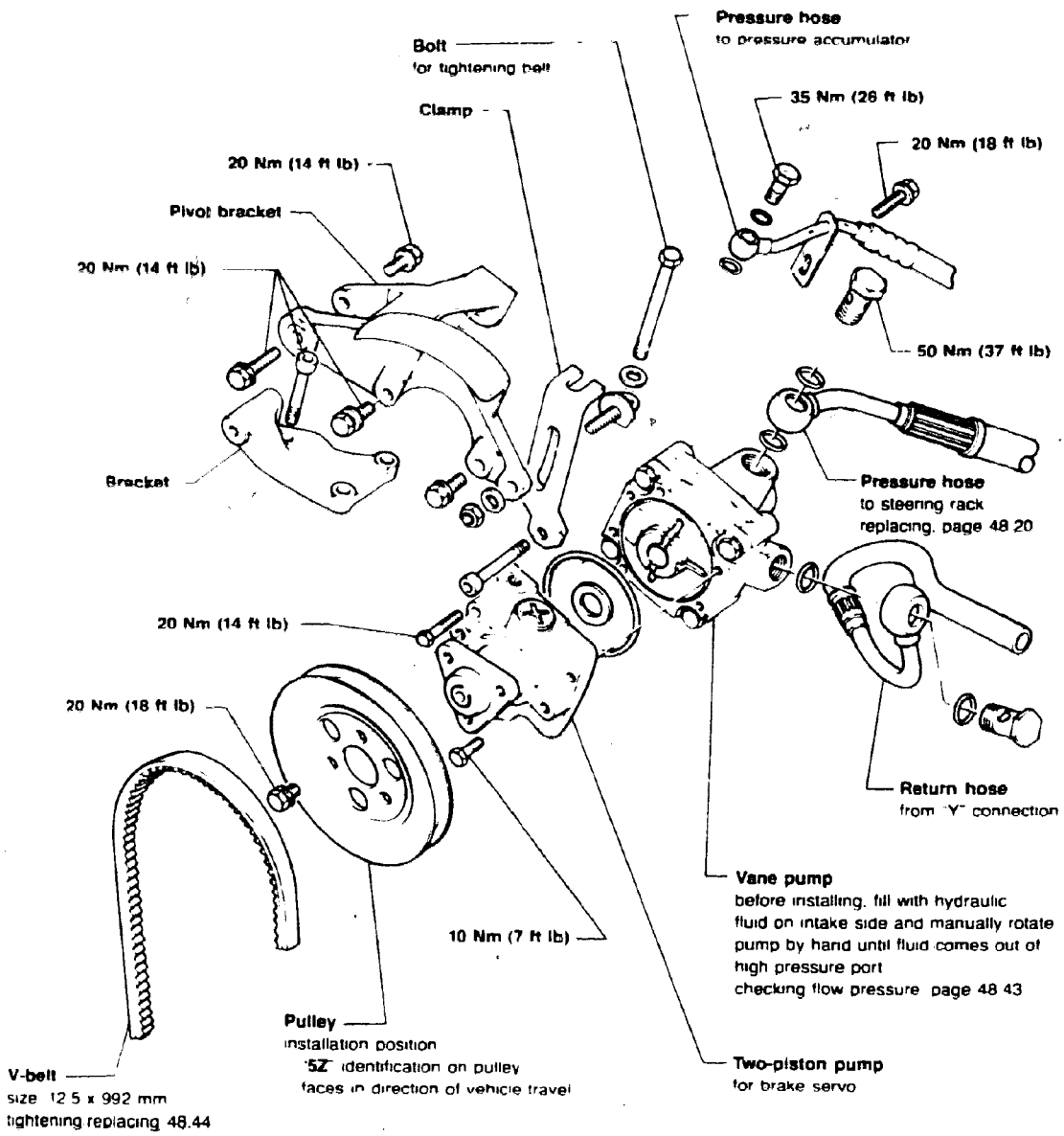

48-739

cardiagn.com

Vane pump flow pressure, checking

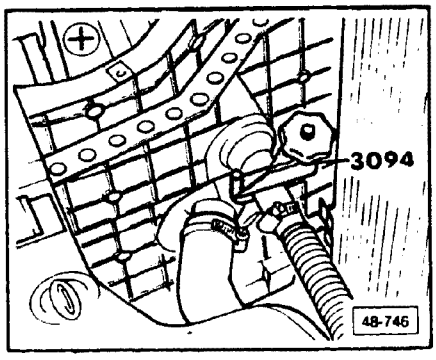

- remove covering for air shroud
- install clamp **3094** or equivalent on suction hose

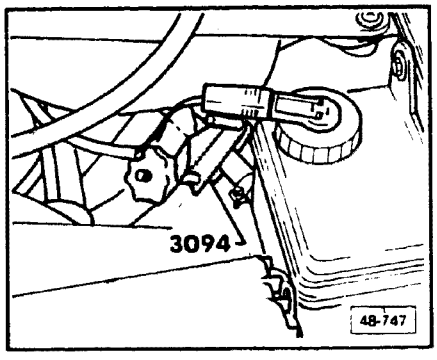

- install clamp **3094** or equivalent on return hose at reservoir

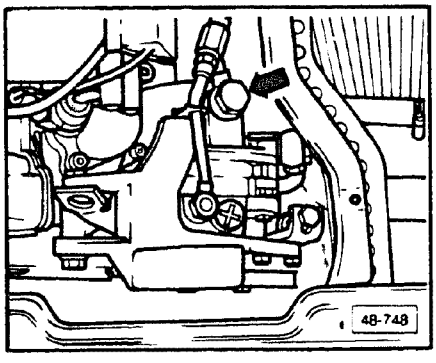

- remove presure hose connection at vane pump (**arrow**)
- remove sealing ring from banjo bolt and install on adaptor **US 1074/4C**

more

cardiagn.com

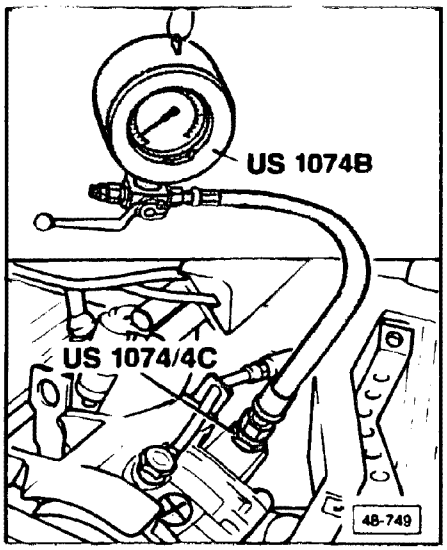

- install **US 1074/4C** to vane pump at pressure hose connection
- close shut-off valve of gauge **US 1074B** (lever to left) and connect gauge to adaptor
- remove clamps from suction and return hoses
- start engine and read pump pressure on gauge at idle
  - must be 100-110 bar (1450-1595 psi) if **NO**, replace vane pump

Note

Do not exceed 10 seconds for pressure test.

- turn engine **OFF**
- install clamp on suction hose
- remove gauge and adaptor
- connect suction hose to pump using new sealing rings
- remove clamp from suction hose
- start engine and let idle for two minutes with front wheels in straight-ahead position

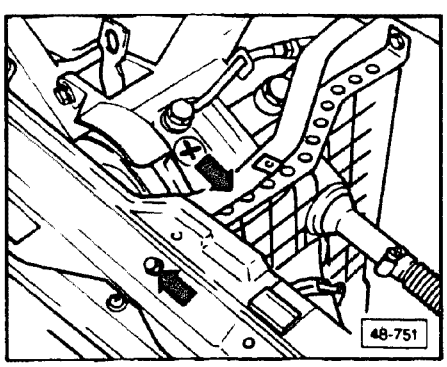

- turn engine **OFF** and immediately check hydraulic oil level in reservoir; if necessary top up to **MAX** mark
- check system for leaks

V-belt, tightening/replacing

- remove covering for air shroud
- remove mounting bolt for bracket of air shroud on cowl (**lower arrow**)
- push air shroud to side

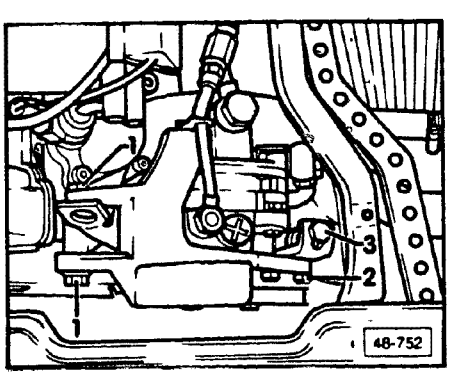

- loosen bolts **1**
- loosen nut **2**
- turn bolt **3** of tensioning bracket accordingly
  - v-belt is tensioned properly when deflection is approximately 10 mm (3/8 in.)
- tighten bolts **1** and nut **2**
- replace air shroud, mounting bolt and cover

cardiagn.com

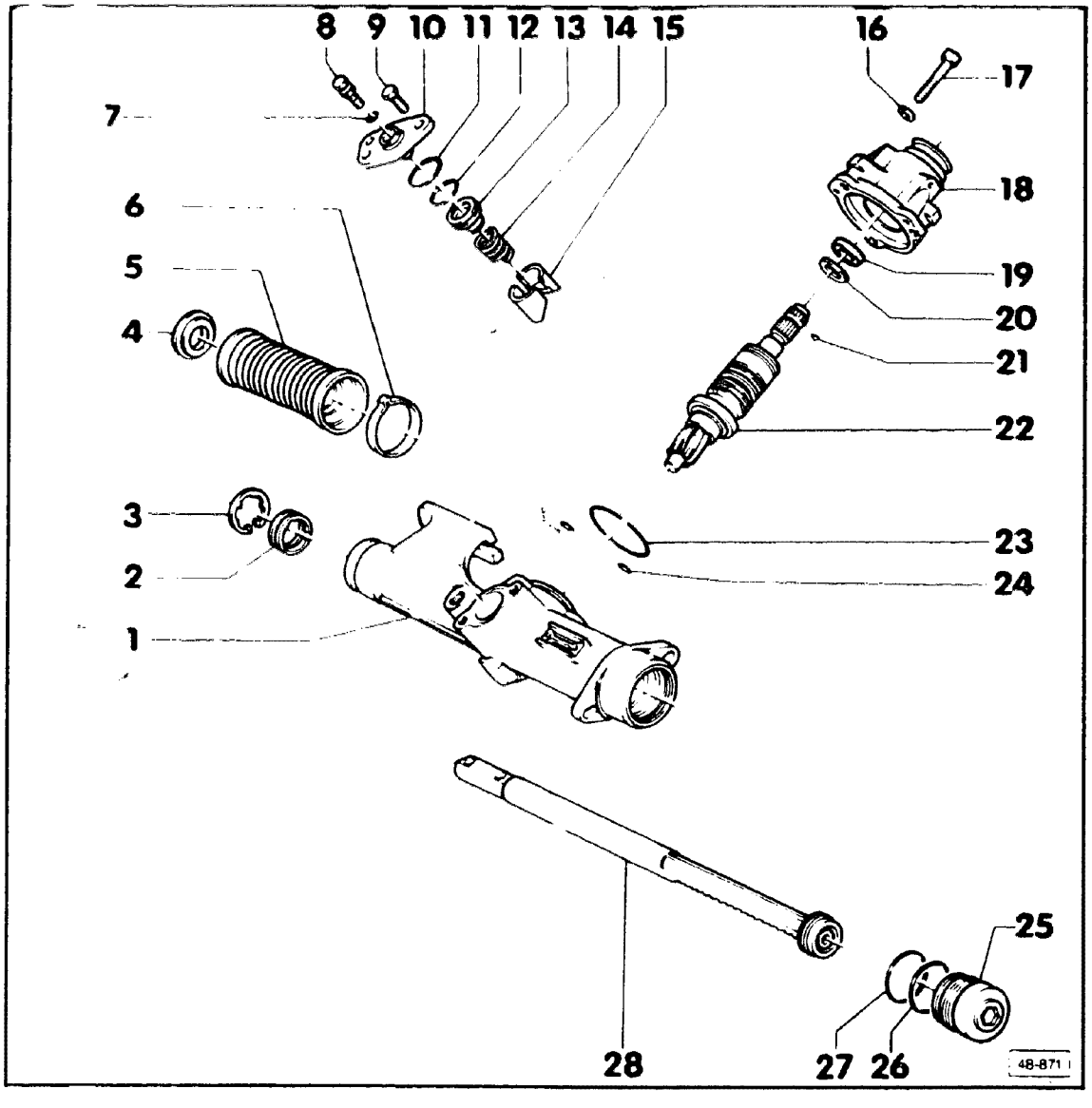

Note

All components marked with an asterisk (*) are included in the repair kit and must be replaced when repairing

CAUTION

The power steering system uses only hydraulic oil Part No **G 002 000**

Always keep the work area and all components absolutely clean.

1 — **Steering gear housing**

2 — **Steering rack seal***
removing Fig 3

3 — **Lock ring**
can only be removed installed with steering gear removed

4 — **Retaining ring**
- push up to stop on gear rack
- install boot in groove

5 — **Boot**
can be replaced with steering gear installed

6 — **Clamp**
use screw-type hose clamp when installing (screw facing toward body panel)

7 — **O-ring***
always replace

cardiagn.com

THIS FRAME INTENTIONALLY LEFT

BLANK

cardiagn.com

8 — **Adjusting screw**
adjusting steering play Fig 7

9 — **20 Nm (15 ft lb)**

10 — **Cover**

11 — **O-ring***
- 35 × 2 mm
- always replace
- install in groove in housing

12 — **O-ring***
- 27 × 2.5 mm
- always replace
- install in groove of seal retainer

13 — **Seal retainer**
removing Fig 5

14 — **Compression spring**
install into thrust piece

15 — **Thrust piece**

16 — **Washer**

17 — **20 Nm (15 ft lb)**

18 — **Valve housing**

19 — **Valve housing seal***
- always replace
- removing Fig 1
- installing Fig 2

20 — **Washer**

21 — **Pin***
- 2.5 × 6 mm
- always replace
- pull pin with pliers before removing valve housing

22 — **Steering pinion/rotary valve**
removing Fig 6

23 — **O-ring***
60 × 2 mm

24 — **O-ring***
9 × 2 mm

25 — **Cap**
- 50 Nm (37 ft lb)
- secured with 2 punch marks 180° apart

26 — **Support ring**
- always replace
- installed position Fig 8

27 — **O-ring***
- 44 × 2.5 mm
- always replace

28 — **Steering rack**
- to remove unscrew cap and slide gear rack to left out of housing
- note any scoring in area of steering rack seal
- installing, page 48 49

cardiagn.com

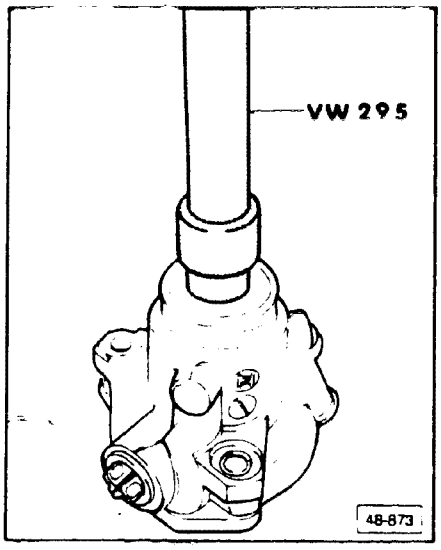

Fig. 1 Valve housing seal, removing

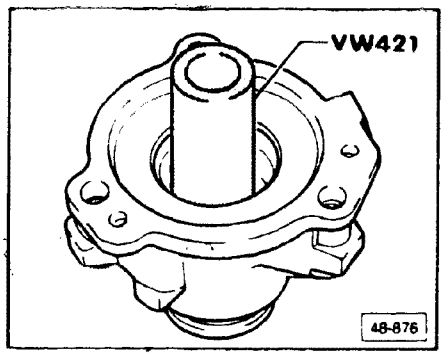

Fig. 2 Valve housing seal, installing

- sealing lip faces steering pinion

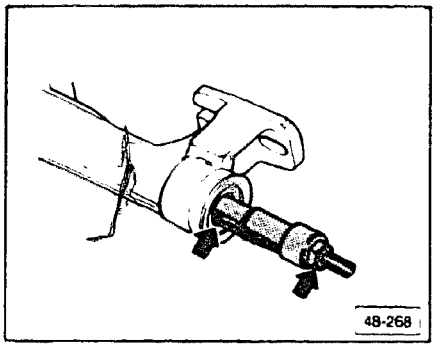

Fig. 3 Steering rack seal, removing

- install internal puller (e.g., **Kukko 21/3**)
- tighten inside seal (**left arrow**) with nut (**right arrow**)
- see Fig. 4

cardiagn.com

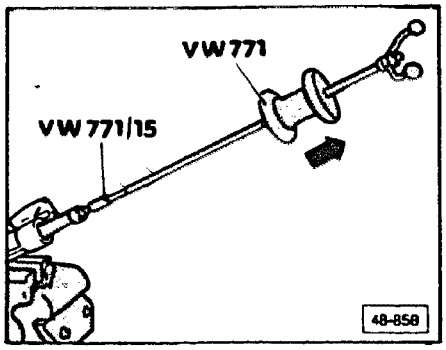

Fig. 4 Steering rack seal, removing

- clamp steering housing in vise
- attach **VW 771** and **VW 771/15** to internal puller and remove seal

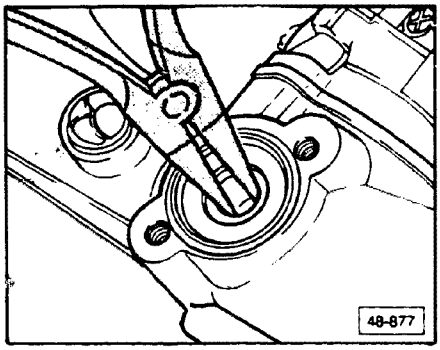

Fig. 5 Seal retainer, removing

- remove with pliers

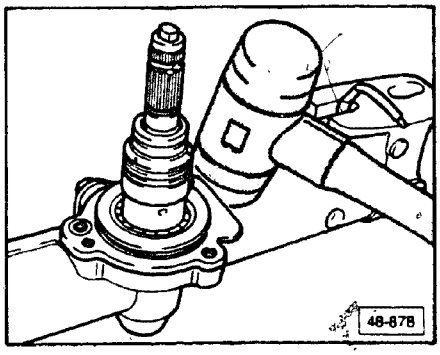

Fig. 6 Steering pinion, removing

- hold pinion by hand while striking housing forcefully with rubber hammer

cardiagn.com

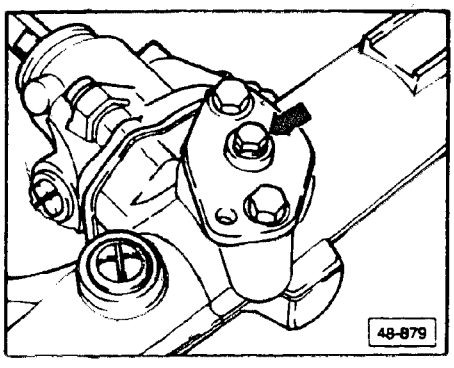

Fig. 7 Steering play, adjusting

Two mechanics are necessary to do the following adjustment. Adjust the steering play with the engine off and the vehicle on the ground. The wheels must be in the straight-ahead position.

- move steering wheel back and forth approximately 30° from center position and listen for rattling and popping noises from steering gear
- second mechanic turns adjusting screw (**arrow**) clockwise until rattling and popping noises are not heard inside vehicle
- conduct test drive and readjust if necessary

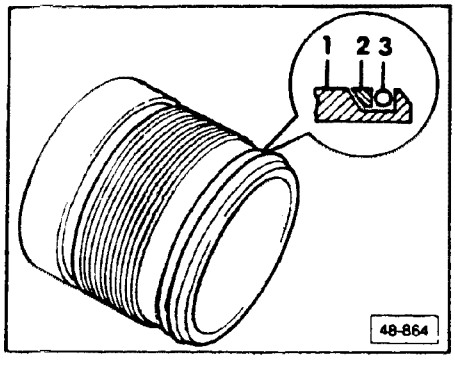

Fig. 8 Support ring, installed position

1 Cap
2 Support ring
3 O-ring

cardiagn.com

Steering rack, installing

- wash housing out thoroughly with cleaning solvent and blow out with compressed air
- coat steering rack and installation sleeve with hydraulic oil

Note

Each repair kit is supplied with an installation sleeve.

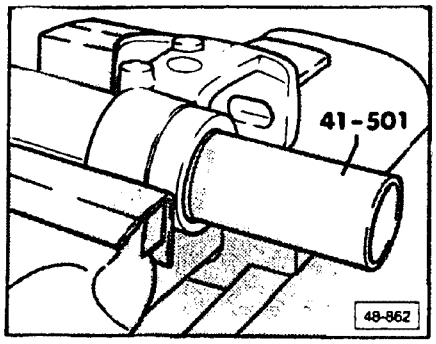

- insert steering rack seal in housing and drive in up to stop

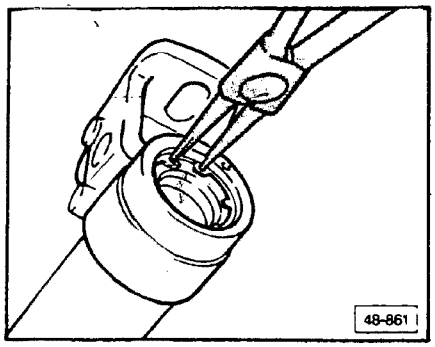

- install lock ring

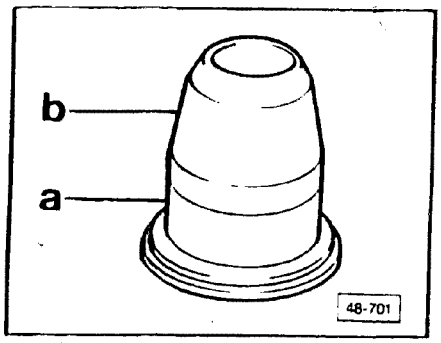

- insert part **b** of installation sleeve into part **a**

cardiagn.com

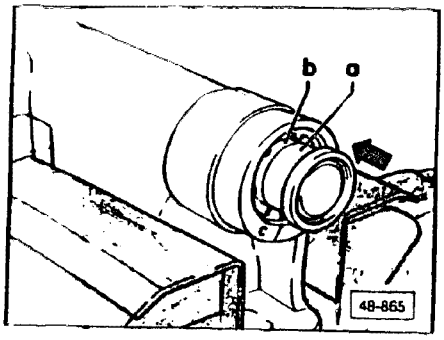

- push sleeves **a** and **b** into steering rack housing up to stop

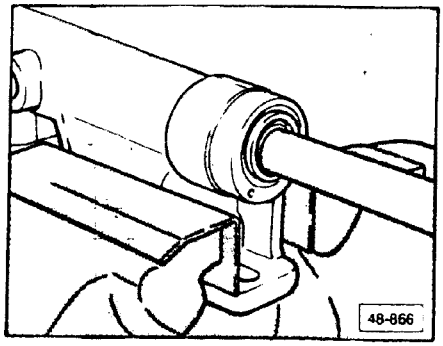

- drive sleeve **b** through housing and out other end with mandrel of appropriate size

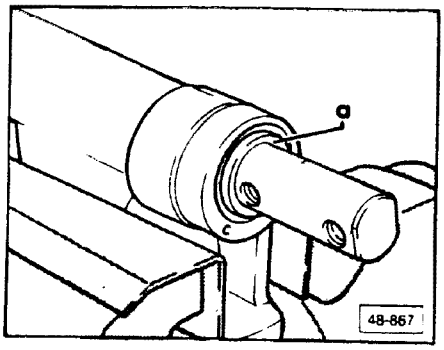

- install steering rack from side opposite seal and push through installation sleeve **a** until flattened portion of rack is through seal
- remove installation sleeve **a**
- thread on cap to prevent rack from sliding out of housing and damaging seal

cardiagn.com

Power steering pump (Vickers), installing

Beginning with the following VINs vehicles with a 5-cylinder engine will have a power steering pump manufactured by either ZF or Vickers

80/90: 8A LA 163 899

Coupe/Quattro: 8B LA 011 092

The Vickers pump comes complete with pulleys and front and rear brackets. The pump is not repairable.

When replacing a power steering pump, always use one from the same manufacturer if possible. If a ZF pump is installed instead of a Vickers pump, the front and rear brackets must be ordered also.

The Part number of the pump differs depending on the VIN:

80/90

up to 8A MA 054 849 =
Part No. **034 145 159 J**

from 8A MA 054 850 =
Part No. **034 145 159 L**

Coupe Quattro

up to 8B MA 002 644 =
Part No. **034 145 159 J**

from 8B MA 002 645 =
Part No. **034 145 159 L**

Removal/installation information is shown on the following pages.

cardiagn.com

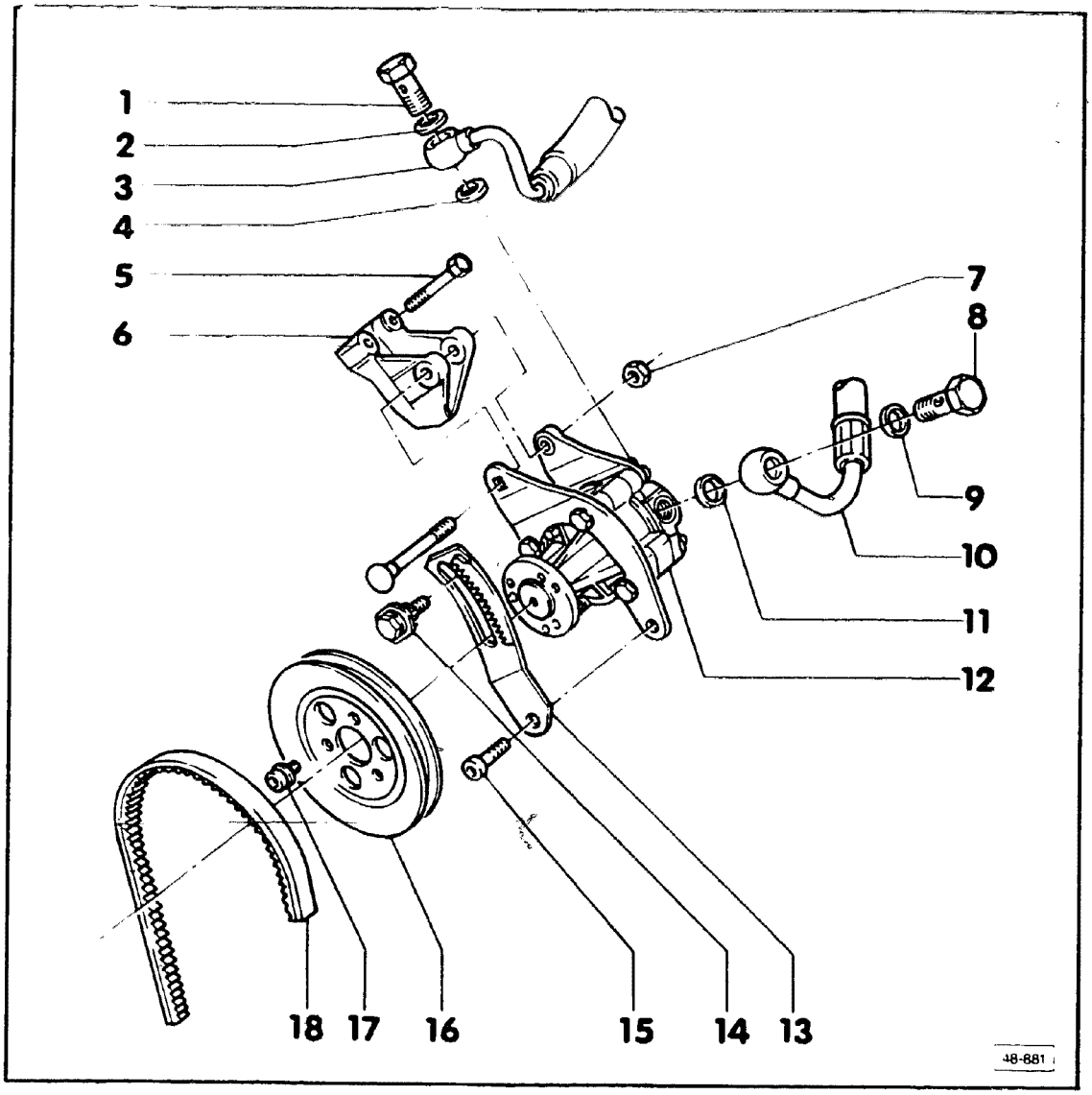

CAUTION

The power steering system uses only hydraulic oil Part No **G 002 000.**

1 — **45 Nm (33 ft lb)**

2 — **Sealing ring**
always replace

3 — **Pressure hose**
45 Nm (33 ft lb)

4 — **Sealing ring**
always replace

5 — **20 Nm (15 ft lb)**

6 — **Bracket**

7 — **20 Nm (15 ft lb)**

8 — **50 Nm (37 ft lb)**

9 — **Sealing ring**
always replace

10 — **Suction hose**

11 — **Sealing ring**

cardiagn.com

12 — Vane pump
- note different types
- before installing, fill with hydraulic fluid on intake side and manually rotate pump by hand until fluid comes out of pressure port
- checking flow pressure see repair manual page 48 32

13 — Tensioning clamp

14 — Tensioning bolt/nut

15 — 20 Nm (15 ft lb)

16 — V-belt pulley
with pulley installed "4Z" must be visible from front

17 — 25 Nm (18 ft lb)

18 — V-belt
12 5 x 992 mm

cardiagn.com

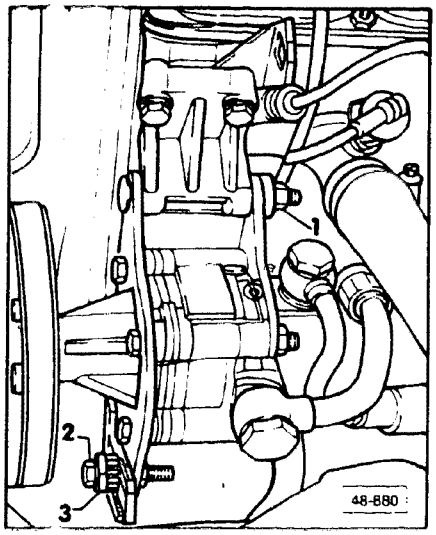

Power steering pump (Vickers), tensioning V-belt

- loosen nut **1**
- loosen bolt **2**
- turn tension nut **3** to adjust belt tension
  - belt tension is correct if belt deflects approximately 10 mm (3/8 in.) when pressed with thumb half way between the two pulleys
- tighten bolt **2**
- tighten nut **1**

cardiagn.com

Index

Acid rain
- repairing damage 50.20

Apron
- assembly 50.14
- center section, removing/installing 50.15
- front, installing 50.16
- front, removing 50.15
- lower section 50.14

Apron (Coupe Q 20V)
- assembly 50.26
- center section, removing/installing 50.28
- front, installing 50.28
- front, removing 50.27

Body dimensions (2-wheel drive)
- floor section 50.2
- front section 50.2
- rear section 50.6
- side 50.5

Body dimensions (Coupe Q 20V)
- front 50.9
- rear 50.12
- side 50.11

Body dimensions (Quattro)
- floor section 50.7
- rear underbody section 50.8

Brilliant black ALD626 & Y9B
- painting 50.19

Fender, front
- adjusting gap 50.17
- installing 50.17
- removing 50.16

Fender, front (Coupe Q 20V)
- adjusting gap 50.30
- assembly 50.29
- removing/installing 50.30

Hood cable
- detaching 50.15

Hood cable (Coupe Q 20V)
- detaching 50.27

Pearl effect paint
- painting procedure 50.18

Plastic parts
- painting 50.18

cardiagn.com

Note

If not specifically mentioned, all tolerances are ± 2.0mm (5/64 in.).

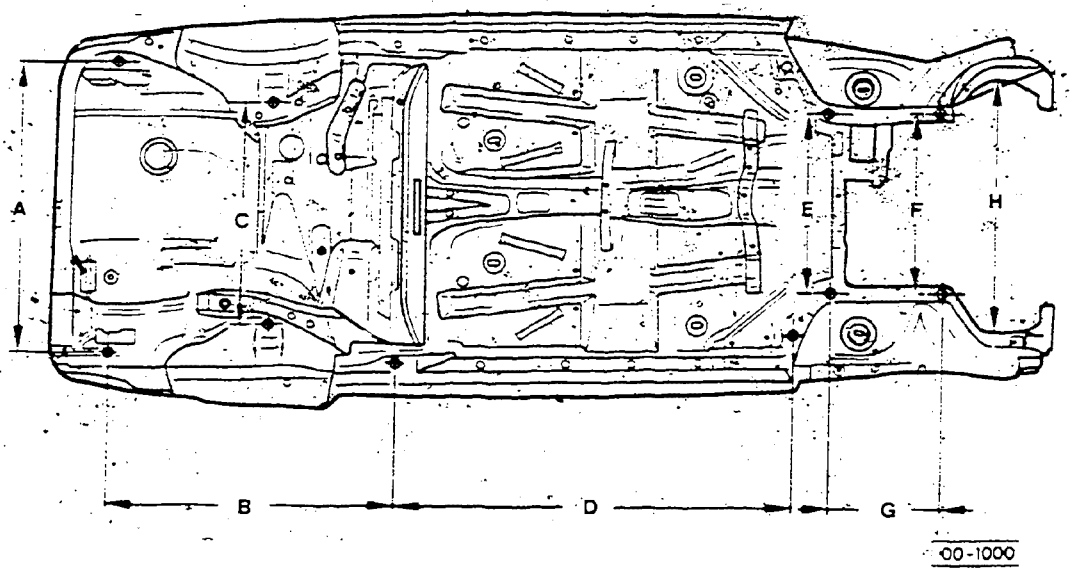

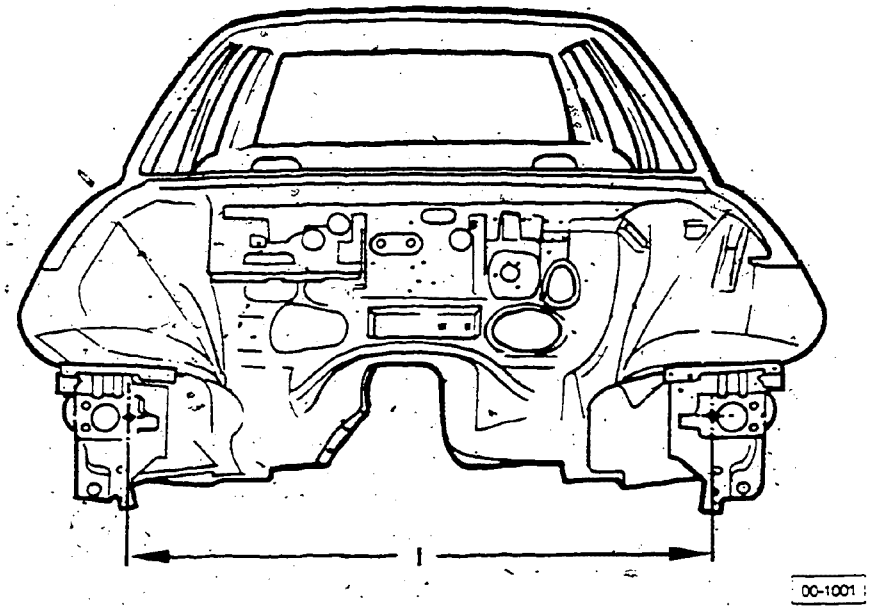

A = 1200mm (46 13/16 in.)
B = 1143mm (44 5/8 in.)
C = 952 ± 1.0mm (37 1/8 ± 3/64 in.)
D = 1555mm (57 5/8 in.)
E = 721 ± 1.0mm (28 1/8 ± 3/64 in.)
F = 734 ± 3.0mm (27 9/32 ± 1/8 in.)
G = 452 ± 2.0mm (17 5/8 ± 5/64 in.)
H = 1050 ± 1.0mm (40 5/8 ± 3/64 in.)
I = 1022 ± 1.0mm (39 7/8 ± 3/64 in.)

cardiagn.com

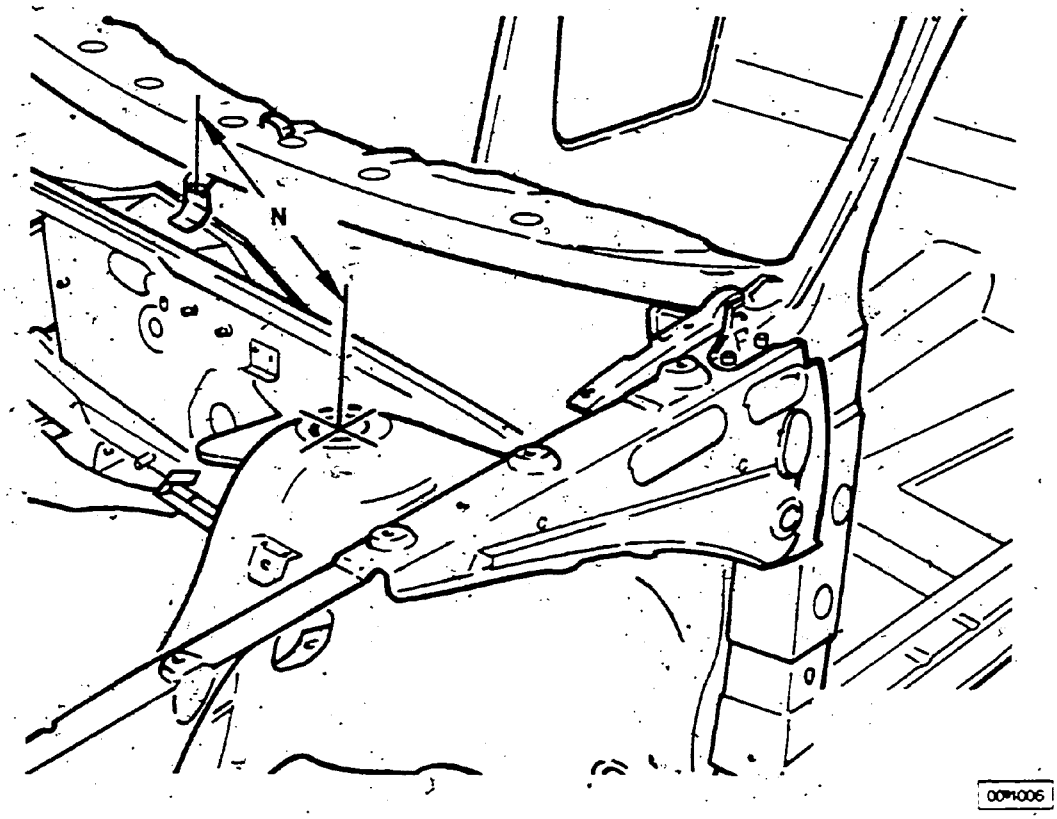

N = 601 ± 1.0mm (23 7/16 ± 3/64 in.)

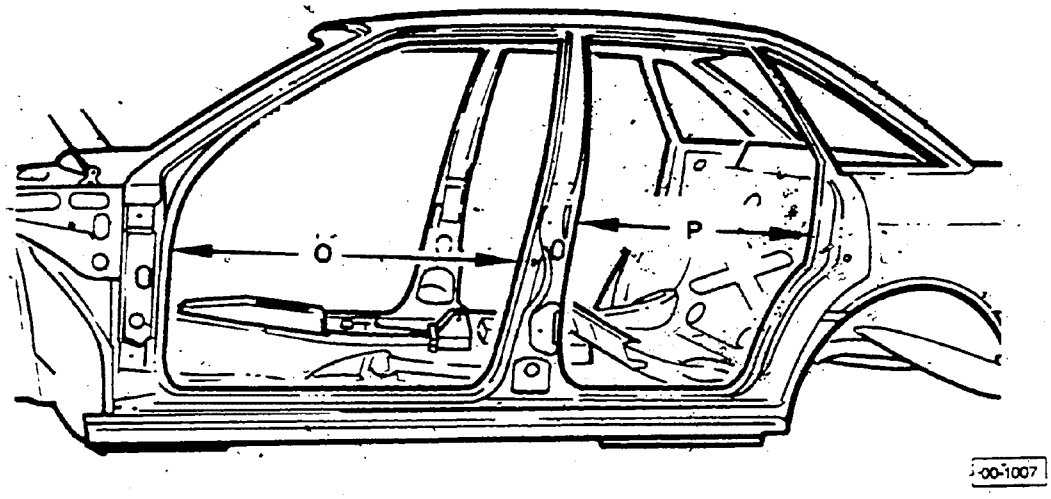

O = 927 ± 1.0mm (36 15/32 ± 3/64 in.)

P = 686 ± 3.0mm (27 21/32 ± 1/8 in.)

cardiagn.com

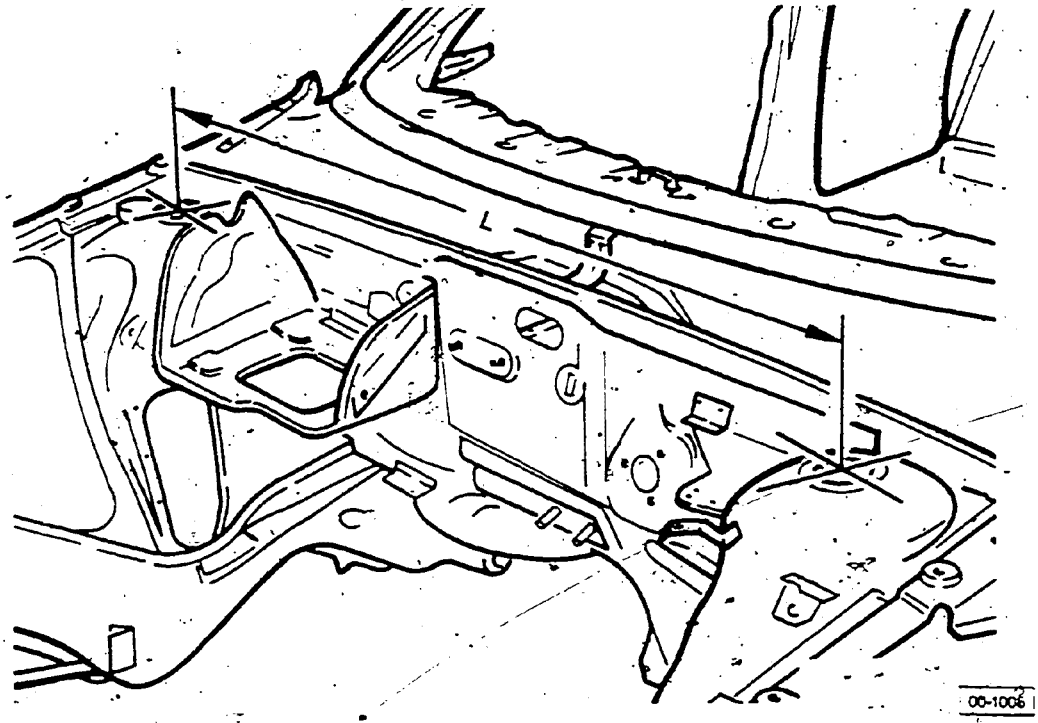

L = 1050 ± 1.0mm (40 5/8 ± 3/64 in.)

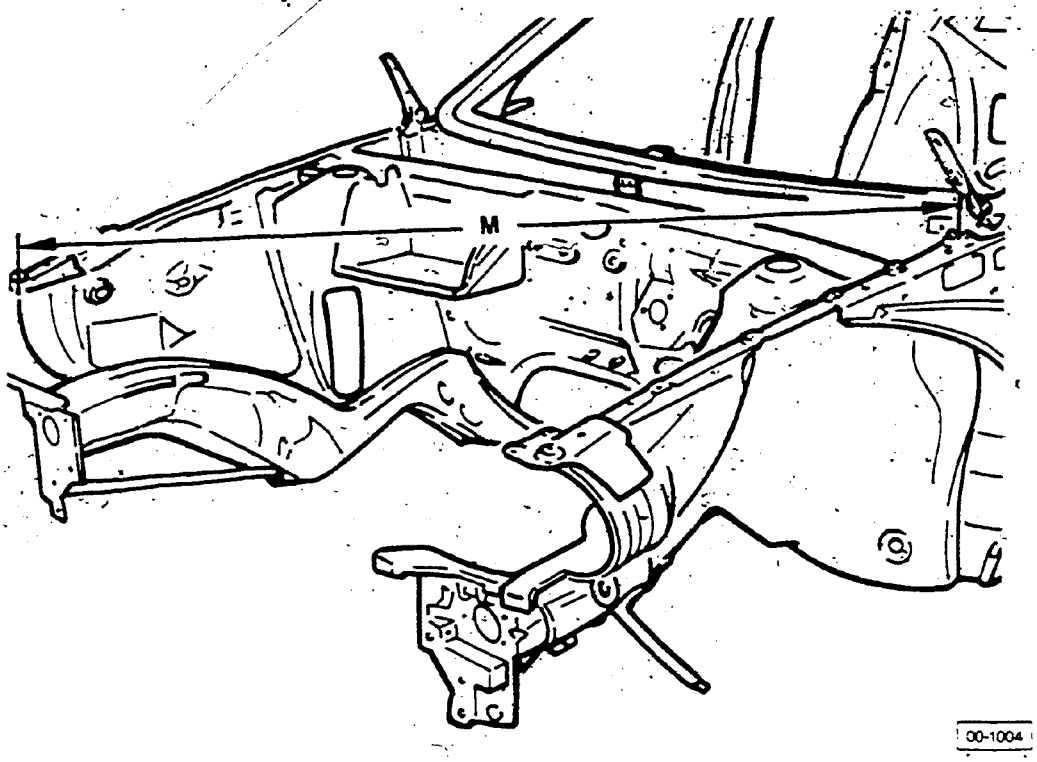

M = 1626 ± 2.0mm (63 5/16 ± 5/64 in.)

cardiagn.com

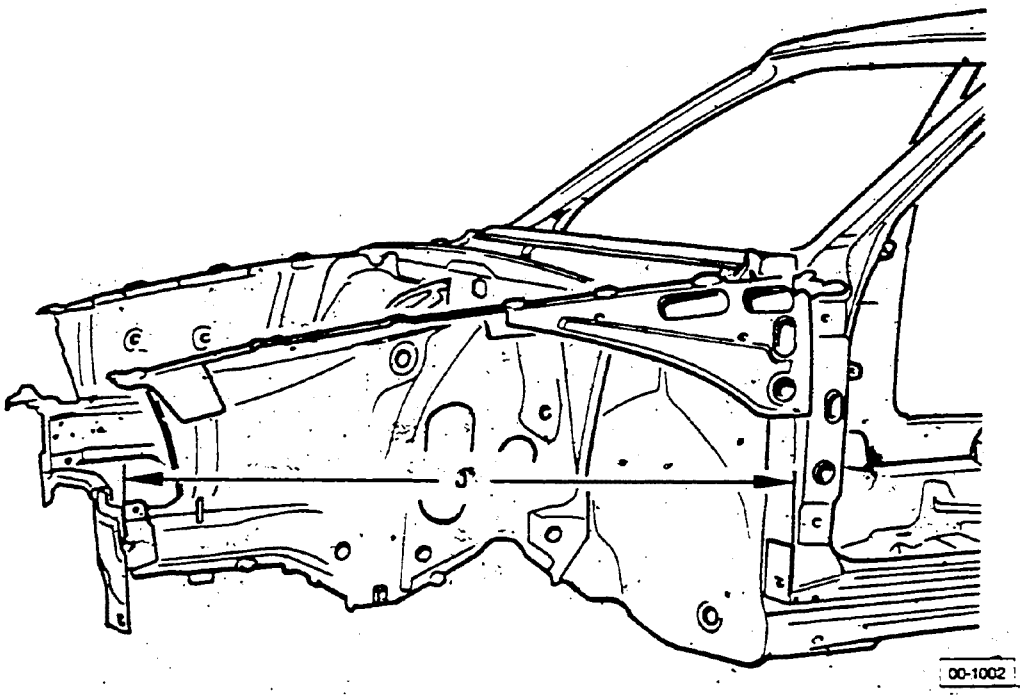

= 1090 ± 2.0mm (42 17/32 ± 5/64 in.)

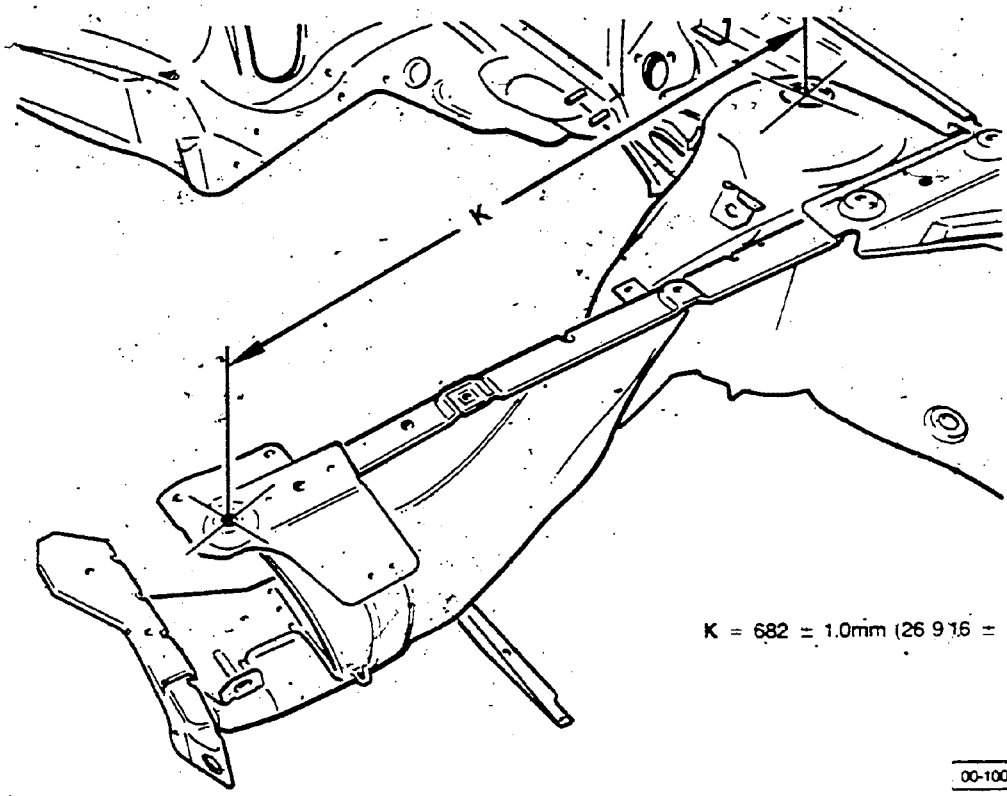

cardiagn.com

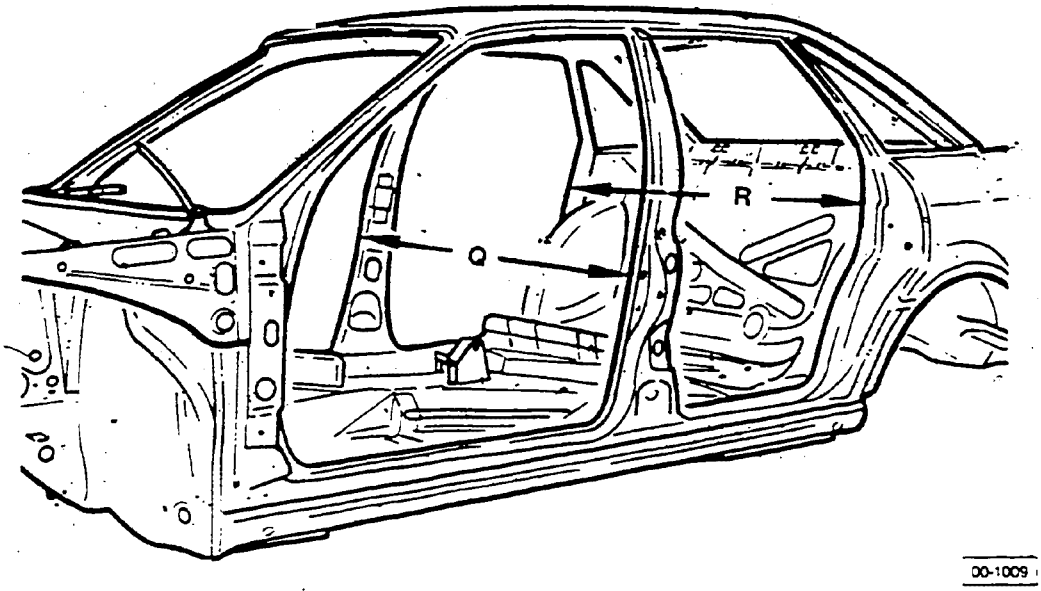

Q = 1380 ± 1.0mm (53 13/16 ± 3.64 in.)

R = 1360 ± 2.0mm (53 1/32 ± 5/64 in.)

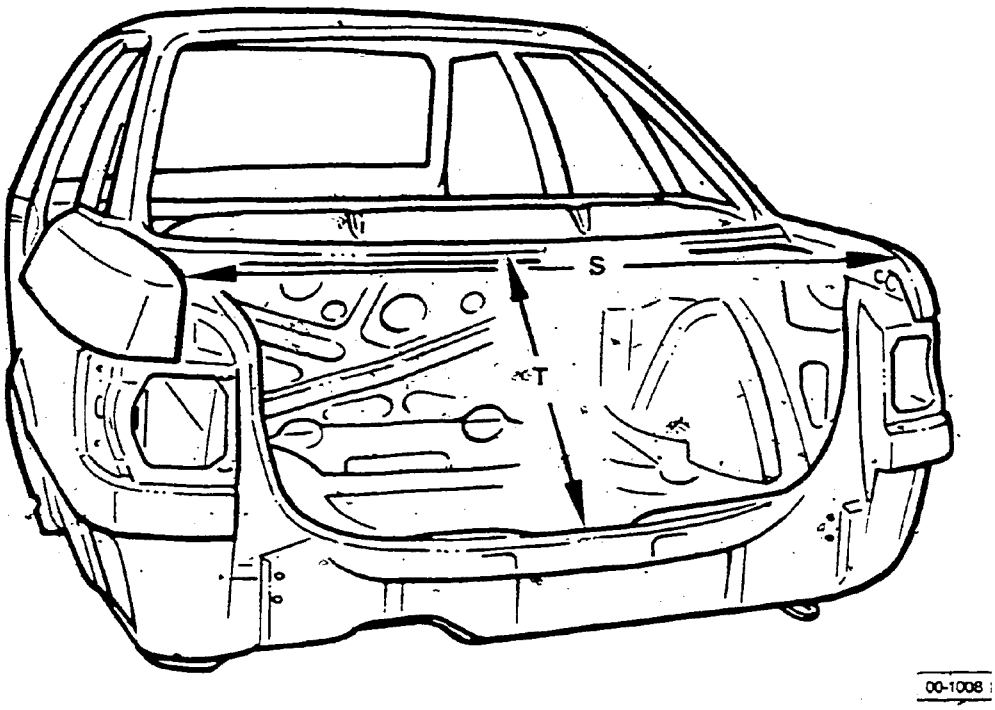

S = 1226 ± 1.0mm (47 13/16 ± 3.64 in.)

T = 470 ± 1.0mm (18 5/8 ± 3.64 in.)

cardiagn.com

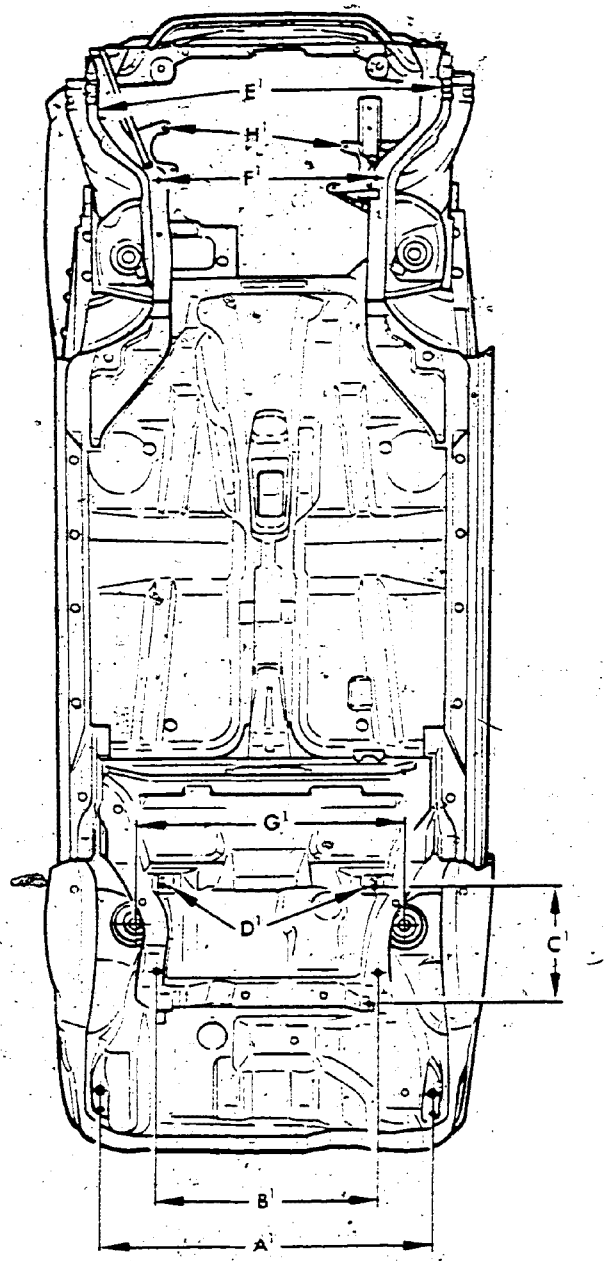

00-1010

A' = 1200mm (46 13/16 in.)
B' = 732mm (28 13/16 in.)
C' = 450mm (17 11/16 in.)
D' = 722mm (28 7/16 in.)
E' = 1143mm (45 in.)

F' = 734mm (28 7/8 in.)
G' = 1031mm (40 9/16 in.)
H' = 616mm (24 in.)

All dimensions are ± 2.0mm (5/64 in.)

cardiagn.com

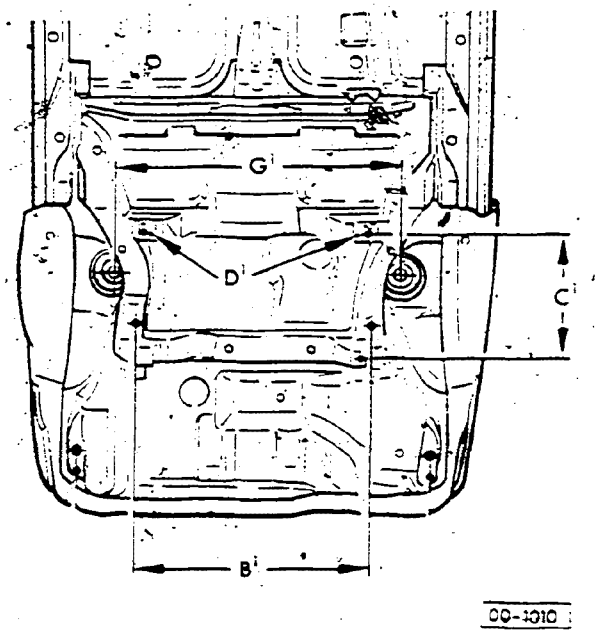

B^1 = 732 mm (28-13/16 in.)
C^1 = 450 mm (17-11/16 in.)
D^1 = 722 mm (28-7/16 in.)
G^1 = 1031 mm (40-9/16 in.)

All dimensions are ± 2.0 mm (5/64 in.)

cardiagn.com

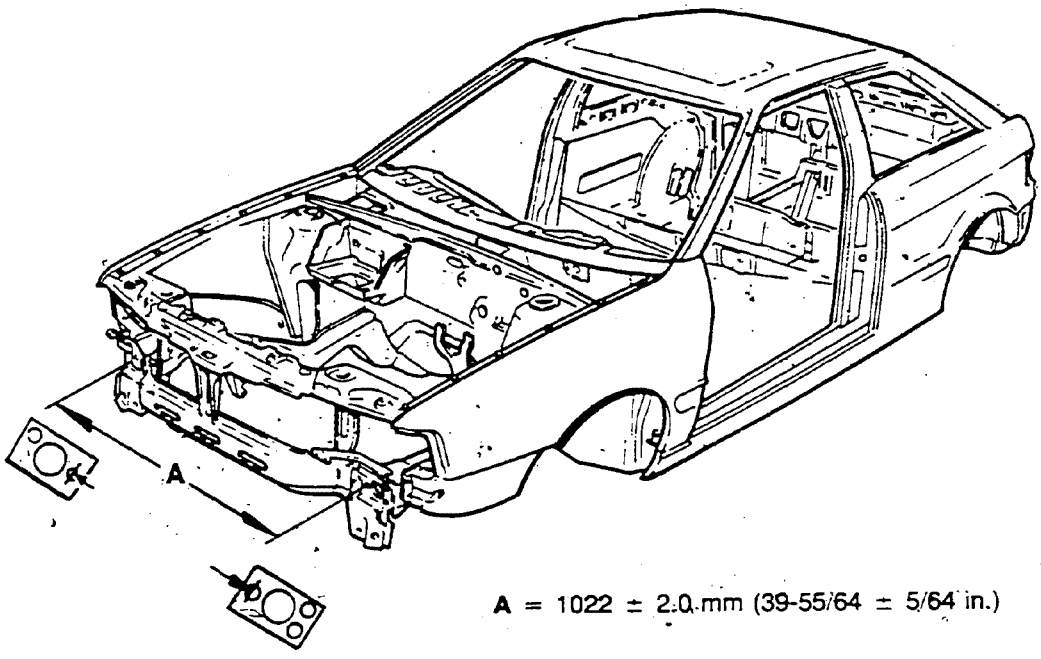

A = 1022 ± 2.0 mm (39-55/64 ± 5/64 in.)

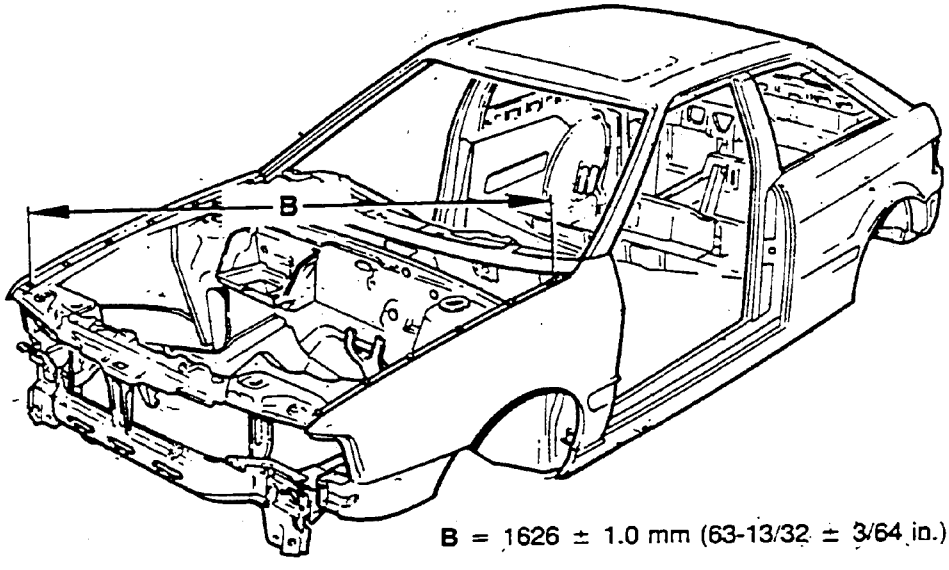

B = 1626 ± 1.0 mm (63-13/32 ± 3/64 in.)

00-1175a

cardiagn.com

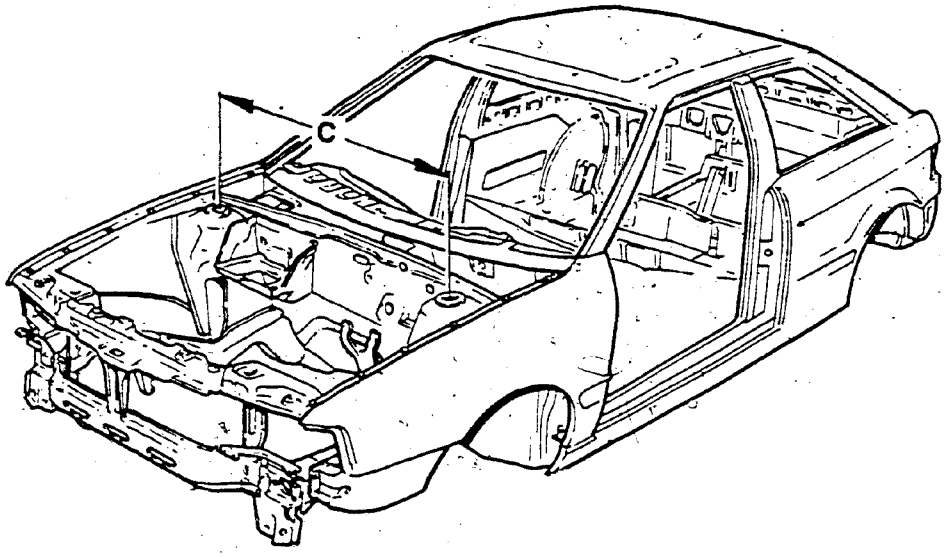

C = 1050 ± 2.0 mm (40-61/64 ± 5/64 in.)

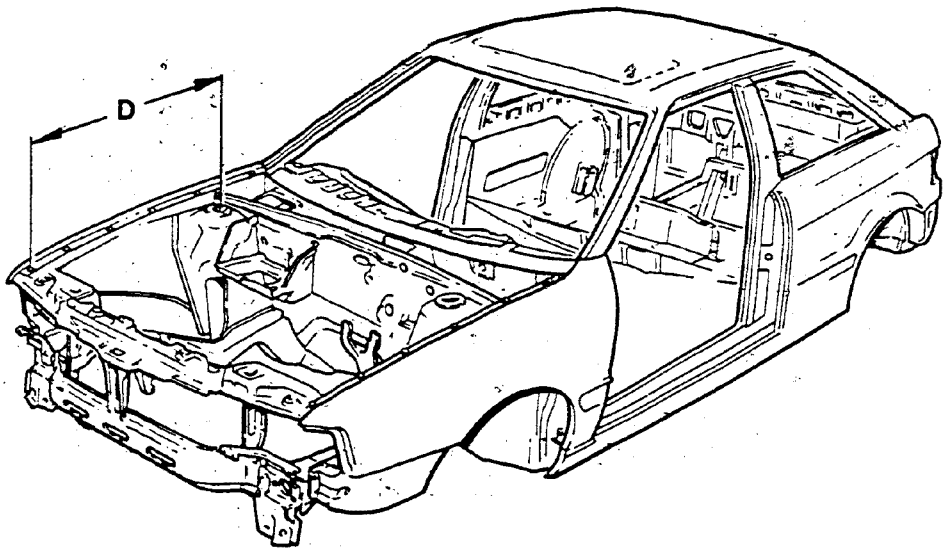

D = 682 ± 1.0 mm (26-19/32 ± 3/64 in.)

00-1178a

cardiagn.com

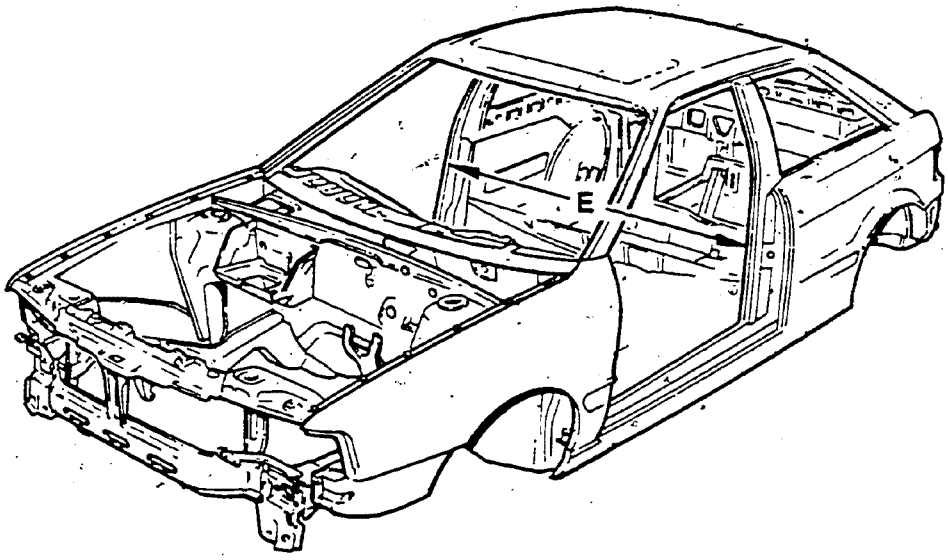

E = 1385 ± 1.0 mm (54-1/64 ± 3/64 in.)

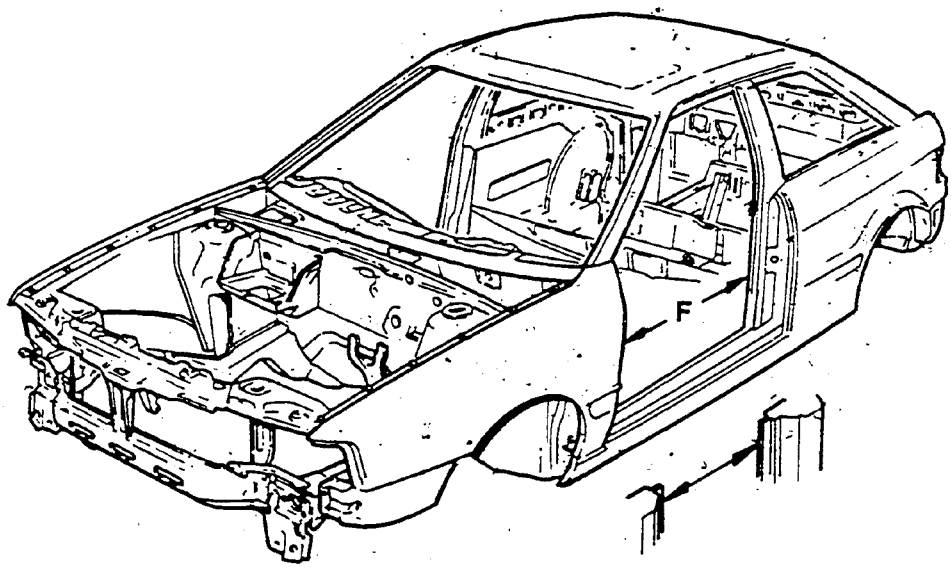

F = 1110 ± 1.0 mm (43-19/64 ± 3/64 in.)

00-1180a

cardiagn.com

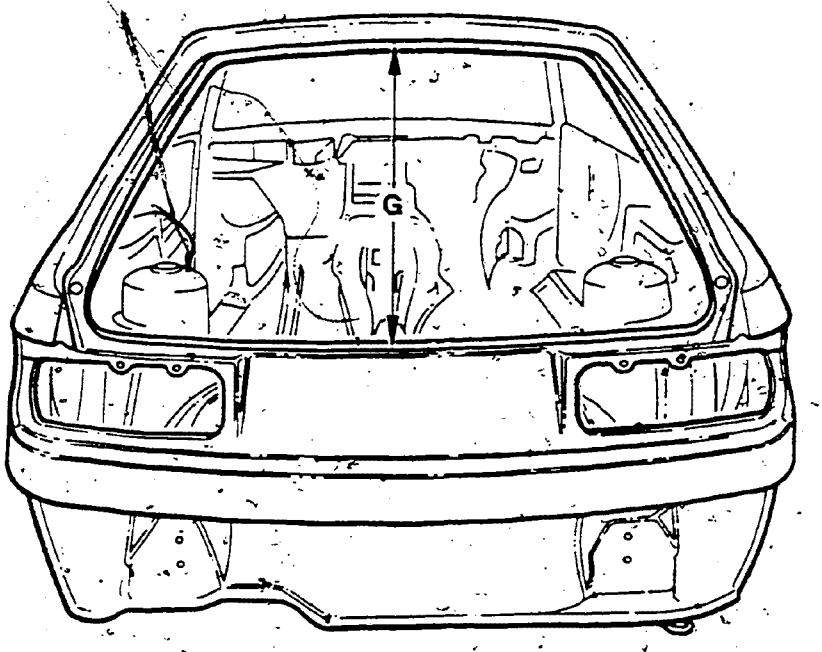

G = 1066 ± 1.0 mm (41-37/64 ± 3/64 in.)

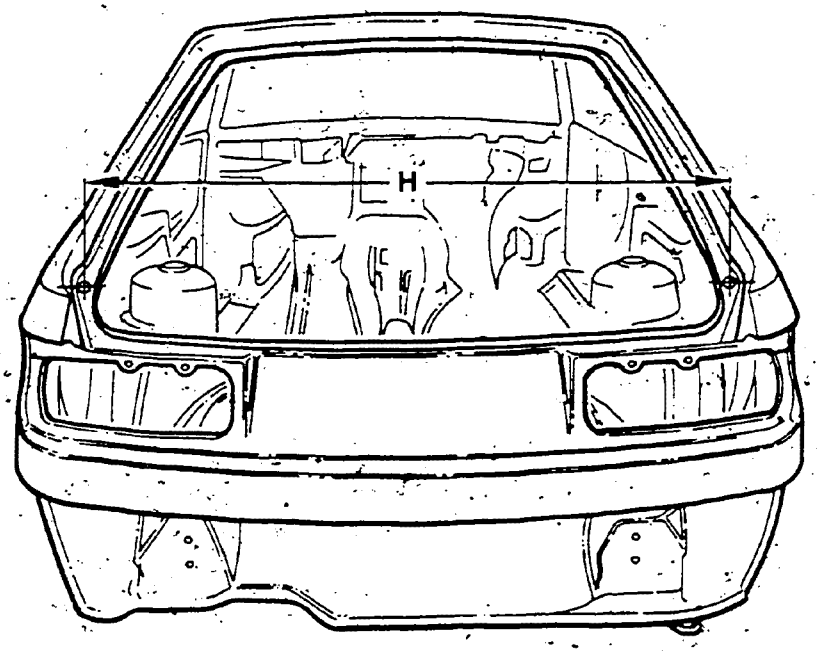

H = 1255 ± 2.0 mm (48-15/16 ± 5/64 in.)

00-1182a

cardiagn.com

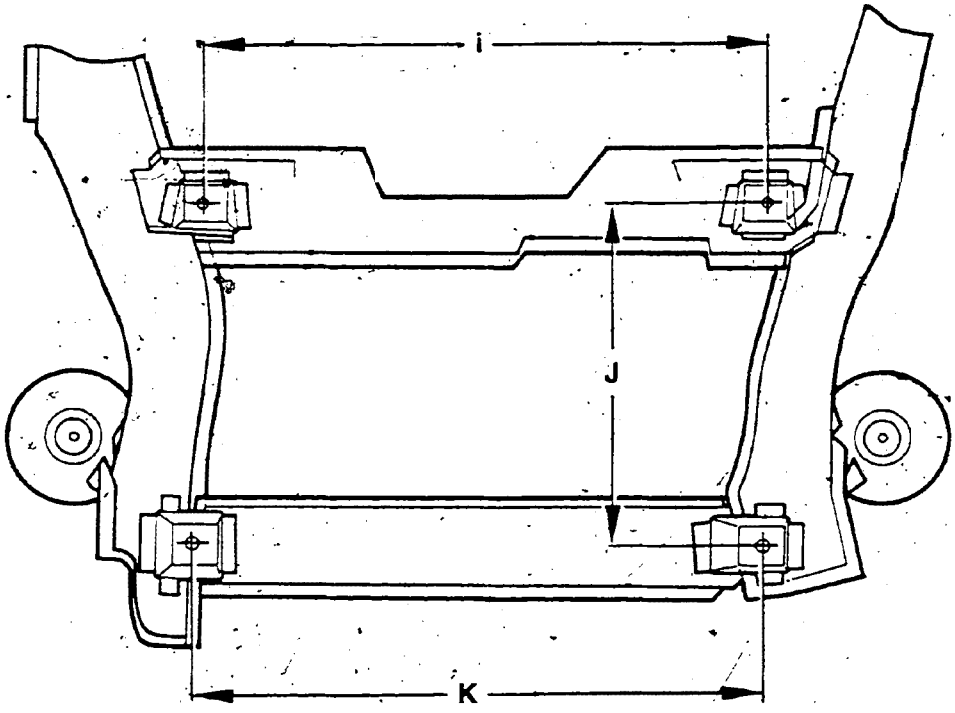

i = 722 ± 2.0 mm (28-5/32 ± 5/64 in.)
J = 450 ± 1.0 mm (17-9/16 ± 3/64 in.)
K = 732 ± 2.0 mm (28-35/64 ± 5/64 in.)

00-1184a

cardiagn.com

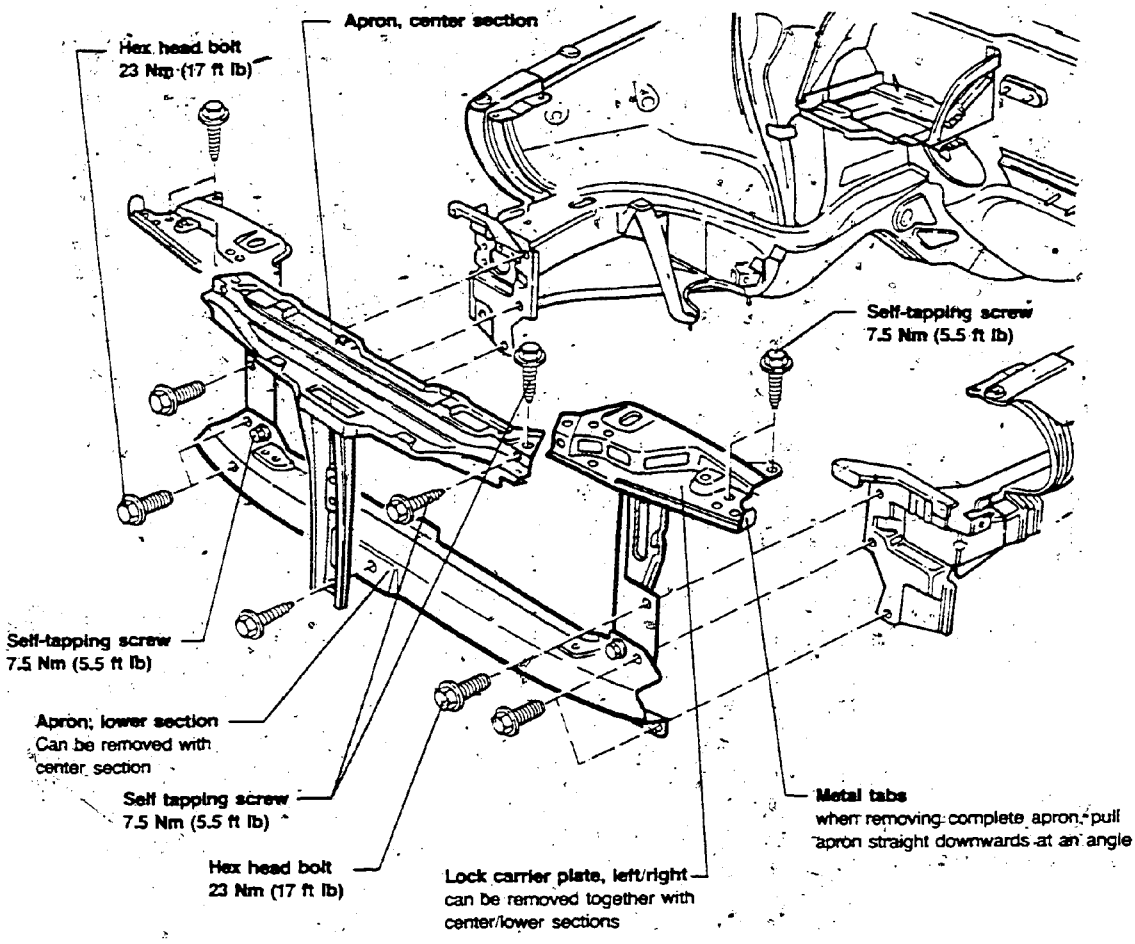

cardiagn.com

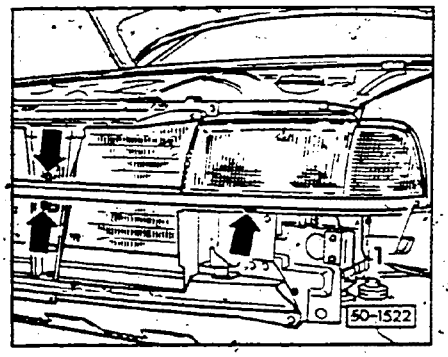

Apron center section, removing/ installing

Removing

- remove bumper (see Repair Group 63)
- remove radiator grill (see Repair Group 66)
- remove trim plate (**arrows**)
- pull apron out from grommets

Installing

Install in reverse order of removal.

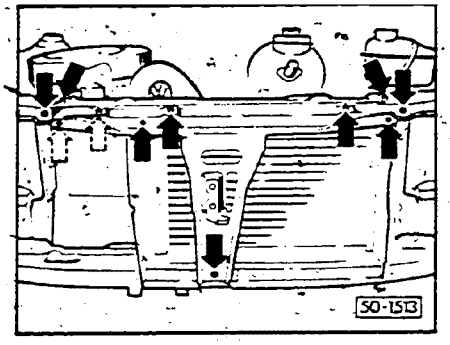

- unscrew cooling air duct and mounting from radiator at top
- remove center section of apron

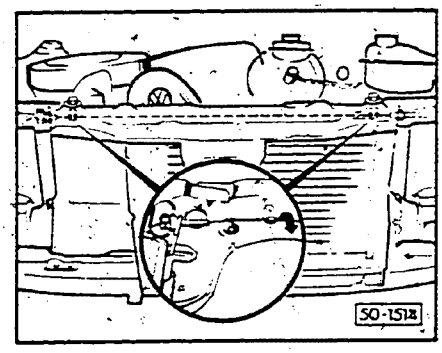

Hood cable, detaching

- remove cable holder through access hole
- lift out hood cable (**inset**)

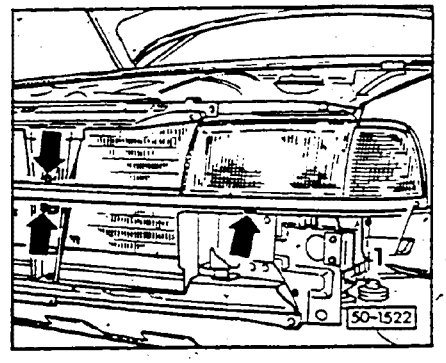

Front apron, removing

Removing

- remove bumper (see Repair Group 63)
- remove radiator grill (see Repair Group 66)
- unscrew trim plate (**arrows**)
- pull out apron to left or right from grommet

cardiagn.com

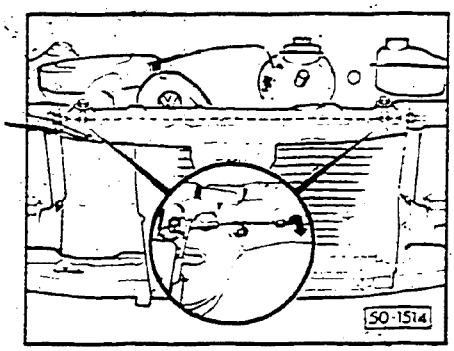

- remove cable holder through access hole and detach cable

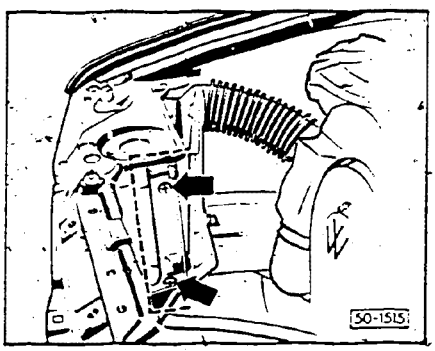

- unscrew intake air housing (**arrows**)

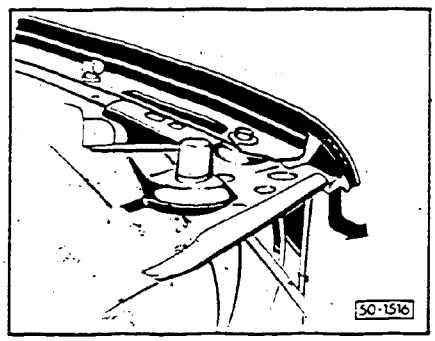

- pull apron out downwards **under** fender (**arrow**)

Front apron, installing

Install in reverse order of removal.

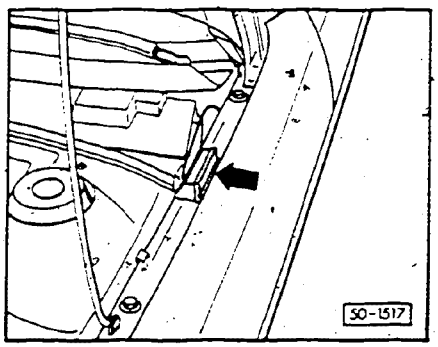

Front fender, removing

Removing

- remove front bumper (see Repair Group 63)
- remove wheel house liner (see Repair Group 66)
- remove seal (**arrow**)

cardiagn.com

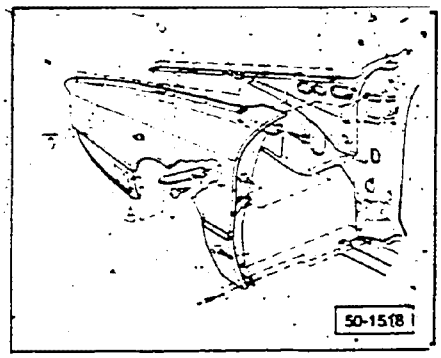

- remove mounting bolts, self tapping screws

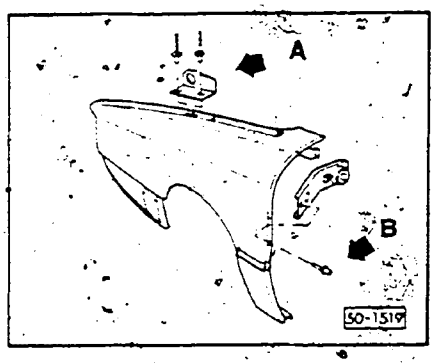

Front fender, installing

Install in reverse order. Note the following

- install rivets for hood support bracket (arrow **A**)
- install rivet for door retainer (arrow **B**)

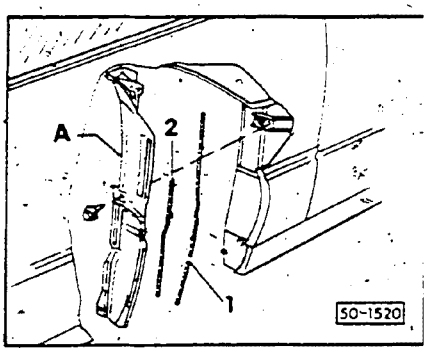

- install strips of sealing cord, **1**, **2** and bolt filler plate **A** to retainer
  - **1** = 480mm (approximately 19 in.) long, 7.0mm (9/32 in.) diameter
  - **2** = 250mm (approximately 10 in.) long, 7.0mm (9/32 in.) diameter

Note

Sealing cord will have to be molded to 7.0mm (9/32 in.) diameter.

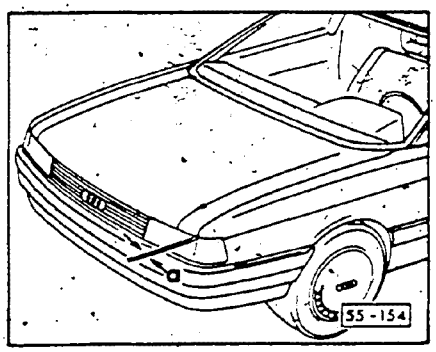

Adjusting front fender, hood gap

- loosen all fender bolts
- with the fender bolts loosened, adjust gap by moving fender
  a = 4.5 ± 1.0mm (11/64 ± 3/64 in.)

cardiagn.com

Identifying/painting and repairing plastic parts

Refer to the Volkswagen of America Refinishing Guide, Lit N. **W42-701-008-1**.

Pearl effect paint, painting

The Audi 80/90 will be available with special pearl white metallic paint as an option. Transparent white lamellar particles are used instead of the aluminum particles generally used in metallic finishes. This provides the iridescent effect peculiar to the pearl paint finish.

The major difference between the present two-stage metallic paint procedure and the new pearl effect procedure is the addition of a metallic base coat step. In addition, the wet-on-wet method is employed so the base coat shines through as a reflective color.

Materials required

Description	Part No.
2K Acrylic High Solid/Filler	ALN 786 001 13
Thinner	ALV 002 000 06
Special Metallic Base Coat	ALN 769 90E
White Pearl Effect Paint	ALD 649 0A0
2K Acrylic Clear Coat	ALN 769 001 10
2K Acrylic Hardener	ALZ 009 001 06 (Slow)
	ALZ 009 002 06 (Fast)

CAUTION

Part numbers are listed for reference only. Always consult with the Parts Department for latest information.

cardiagn.com

Paint procedure

Step 1:

- apply 2K acrylic high solid primer/filler as label directions recommend
- sand with ultra fine sandpaper
- clean with silicone remover

Step 2:

- spray special white metallic base coat
  - mixing ratio 2:1 with hardener
  - spray two covering coats
  - spray viscosity: 17 seconds, adjusted with thinner **ALV 002 000 06**
  - flash-off time: 10-15 minutes

Step 3:

- spray white pearl-effect paint plus 80% synthetic thinner
  - spray three coats
  - spray viscosity: 17 seconds
  - flash-off time: 15 minutes

Step 4:

- spray 2K acrylic clear coat with 2K acrylic hardener
  - spray two coats
  - mixing ratio: 2:1
    spraying viscosity: 16-17 seconds, adjusted with thinner **ALV 002 000 06**
  - flash-off time: 5-10 minutes
  - drying time: 60 minutes at 60°C (140°F)

Brilliant black ALD 626 Y9B, painting

Standard two-step painting and refinishing procedures apply. Note the following:

- do not mix or touchup with **L 041**
- do not mix or touchup with **ALN 769** finishing paint

> **CAUTION**
>
> Part numbers are listed for reference only. Always consult with the Parts Department for latest information.

cardiagn.com

CONTINUED IN THE

BEGINNING OF NEXT ROW

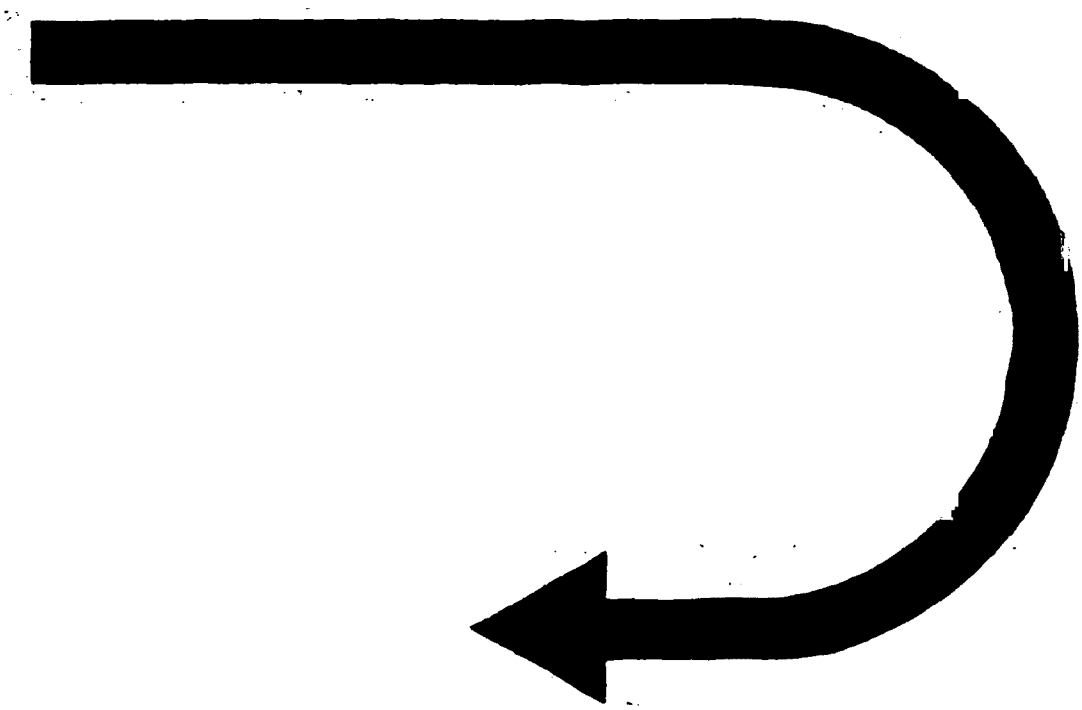

cardiagn.com

Acid rain spots on paint, repairing

Acid rain spots are most visible under fluorescent light and look like water spots.

In most cases, you can remove these spots by the following procedures and thus avoid re-painting.

Do **NOT** confuse the effects of acid rain damage with industrial fallout. Industrial fallout consists of small airborne metallic particles that settle onto the paint and eventually eat their way into the finish. Rubbing your hand across the clean surface will reveal a gritty texture.

Inspect each new vehicle for acid rain spots as soon as it arrives at the dealership. Document your findings at that time in accordance with dealer instructions for Transportation Damage Claims. If you see acid rain spots; get prior approval from your DSM to do the reconditioning outlined.

If acid rain spot removal is new to you, we recommend that you contact a good body shop or reconditioning center.

WARNING

Before using any chemicals or cleaning compounds, carefully read all of the cautions and medical information on the container. Always follow all of the manufacturer's recommendations.

cardiagn.com

Most makers of professional automotive reconditioning products recommend the following six steps **IN SEQUENCE** to repair acid rain paint spots:

STEP 1: Inspection

- wash vehicle with mild soap and water, then dry completely

> **CAUTION**
>
> Do **NOT** wash or dry vehicle in direct sunlight. Ordinary water spots could form and confuse the inspection.

- inspect the following surfaces under a fluorescent light
  - hood, roof, rear deck, tops of fenders, painted surfaces of bumpers and doors from the belt line up

STEP 2: Neutralization

The continuing effect of the acid must be stopped by neutralizing.

- mix a solution of baking soda and water (4 tablespoons per gallon) and stir until completely dissolved
- apply solution to all affected areas and let stand for a few minutes before rinsing off with clear water

Commercial neutralizing products such as "Blue Max" by Car Brite® or equivalent work well.

cardiagn.com

STEP 3: Buffing

You can buff by hand or with a low speed orbital buffer or with a high speed buffer.

> **CAUTION**
>
> It is extremely important that power buffing be done by an experienced person. If done incorrectly, power buffing can quickly and easily damage the paint finish.
>
> Use clean buffing pads at ALL times.

- mask off any trim or glass close to affected areas
- buff small areas at a time, no larger than two feet by two feet
- buff using a light polishing compound such as "Finesse-It" by 3M®, "Acid Rain Creme" by Car Brite®, or equivalent. Follow the manufacturers instructions to achieve the best possible results.

> **CAUTION**
>
> Do **NOT** use general purpose rubbing or buffing compounds. They are too coarse for this application and could damage the finish.

- buff surface until acid spots are removed

Note

Inspect the work surface frequently during buffing to ensure that only a minimum of original finish is removed. If the color of the vehicle shows up on the buffing pad: you have cut through the clearcoat and you have to repaint the affected area.

cardiagn.com

STEP 4: Cleaning

- wash vehicle thoroughly with a solution of mild soap and water
- rinse vehicle with clear water then dry completely
- inspect vehicle to see if another application is necessary.

STEP 5: Polishing

Polish the finish to restore the original luster either by hand or with a power buffer. Always follow polishing with an application of wax.

> **CAUTION**
>
> It is extremely important that power buffing be performed by an experienced person. If done incorrectly, power buffing can quickly and easily damage the paint finish.
>
> Use clean buffing pads at ALL times.

- buff with polishes such as "Liquid Polish" by 3M®, "Crystal Shine" by Car Brite®, or equivalent. Follow the manufacturers instructions to get the best possible results.

cardiagn.com

STEP 6: Waxing

Waxing (unlike polishing) will seal the finish and prevent acid rain from leaving spots.

- **HAND WAX** using clean cheesecloth and a good quality non-abrasive wax.

If, in extreme cases, you can still see acid rain spots after the previous six steps, or if the clearcoat has been rubbed through, it will be necessary to re-paint the affected areas.

Get prior DSM authorization for ALL acid rain related reconditioning, as well as repainting.

cardiagn.com

cid Rain Spot Removal Flowchart

(See detailed instructions on previous pages)

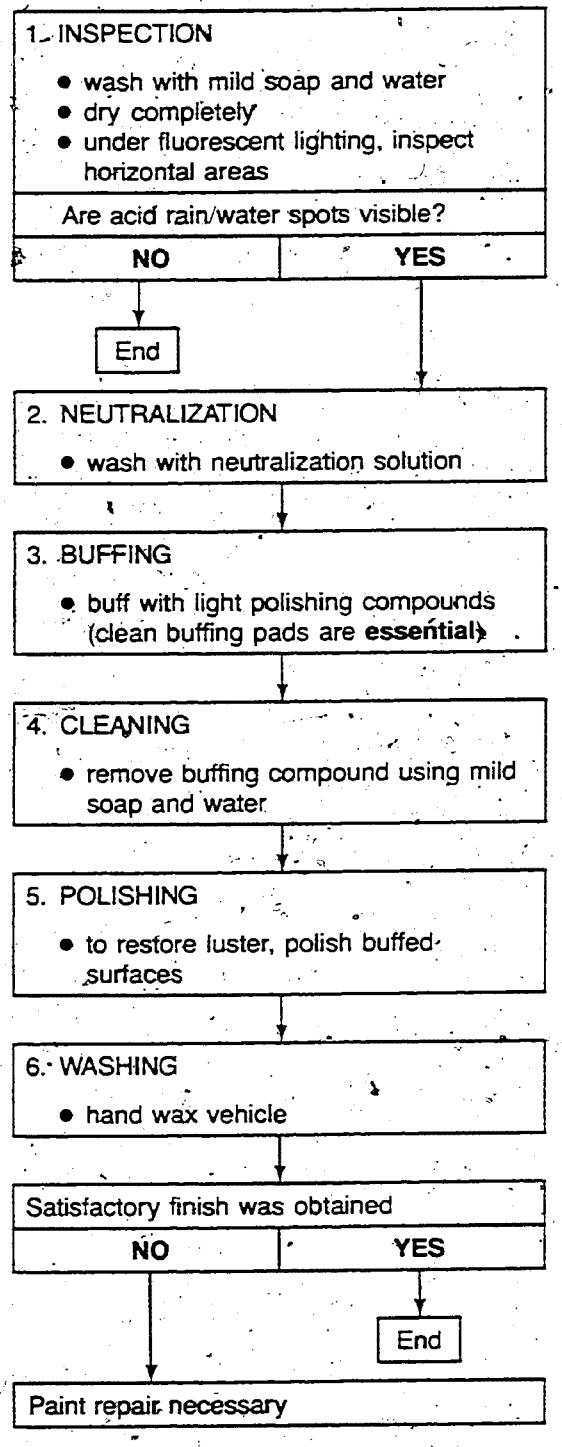

cardiagn.com

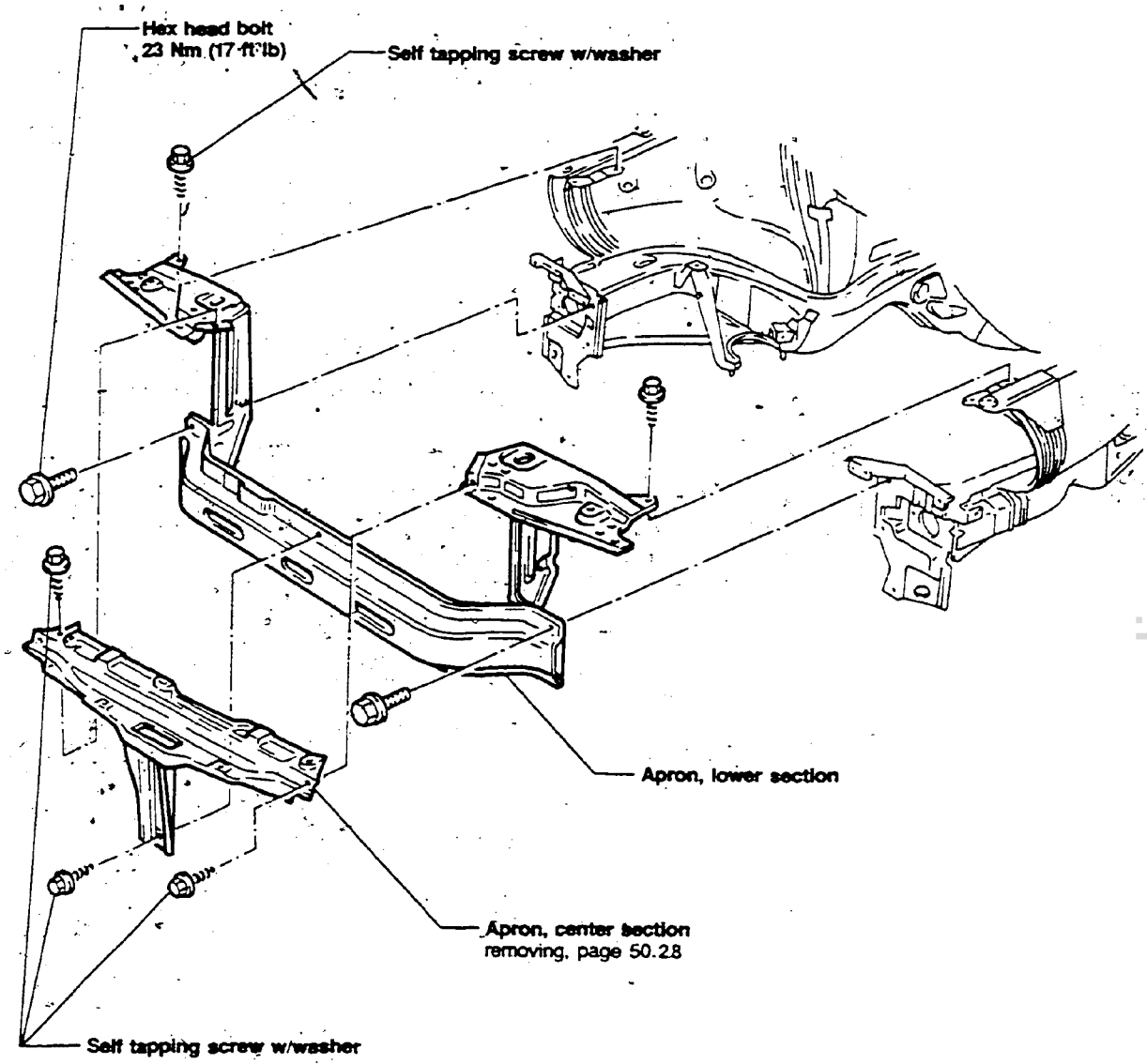

Note

Center and lower apron panels may be replaced individually.

50-1534

cardiagn.com

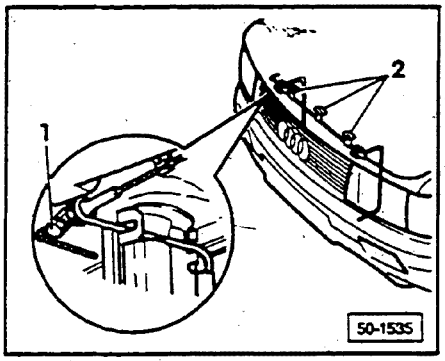

Hood cable, detaching

- loosen cable holder **1** through access hole
- unclip cable from bracket **2**
- turn bracket **2** approximately 90°, and unhook from apron

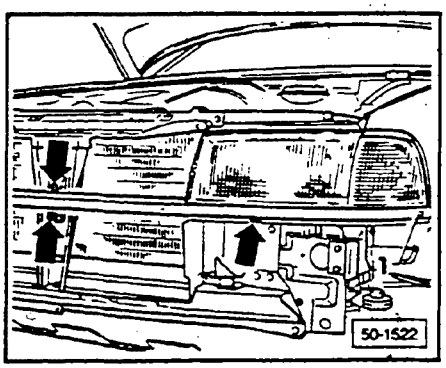

Front apron, removing

- remove bumper (see Repair Group 63)
- remove radiator grille (see Repair Group 66)
- unhook hood cable
- unscrew trim (**arrows**) and pull out from grommets

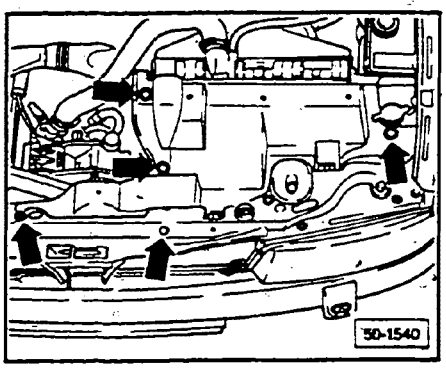

- unscrew cooling air duct, radiator bracket (**arrows**)
- unscrew oil cooler bracket
- disconnect switch for engine compartment light
- open tie-wrap on apron panel

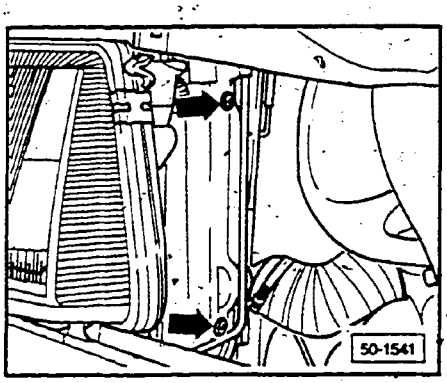

- unscrew air guide for intake air (**arrows**)

cardiagn.com

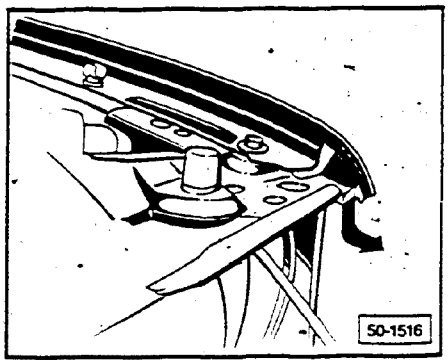

- pull apron out and downwards **under** fender (**arrow**)

Front apron, installing

Reinstall all components in reverse order of removal.

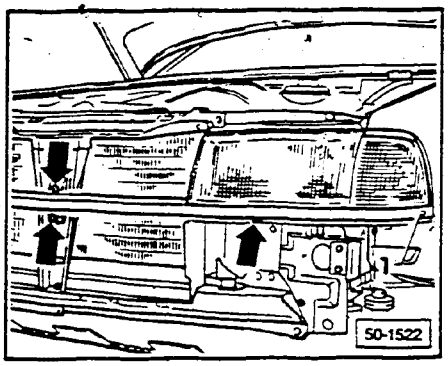

Apron center section, removing

- remove bumper (see Repair Group 63)
- remove radiator grille (see Repair Group 66)
- unhook hood cable
- unscrew trim (**arrows**) and pull out from grommets

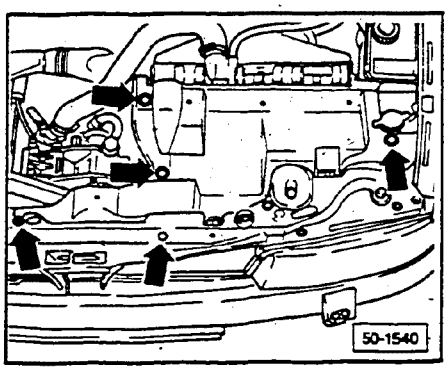

- unscrew cooling air duct, radiator bracket (**arrows**)
- unscrew and remove apron center section

Apron center section, installing

Reinstall all components in reverse order of removal.

cardiagn.com

THIS FRAME INTENTIONALLY LEFT

BLANK

cardiagn.com

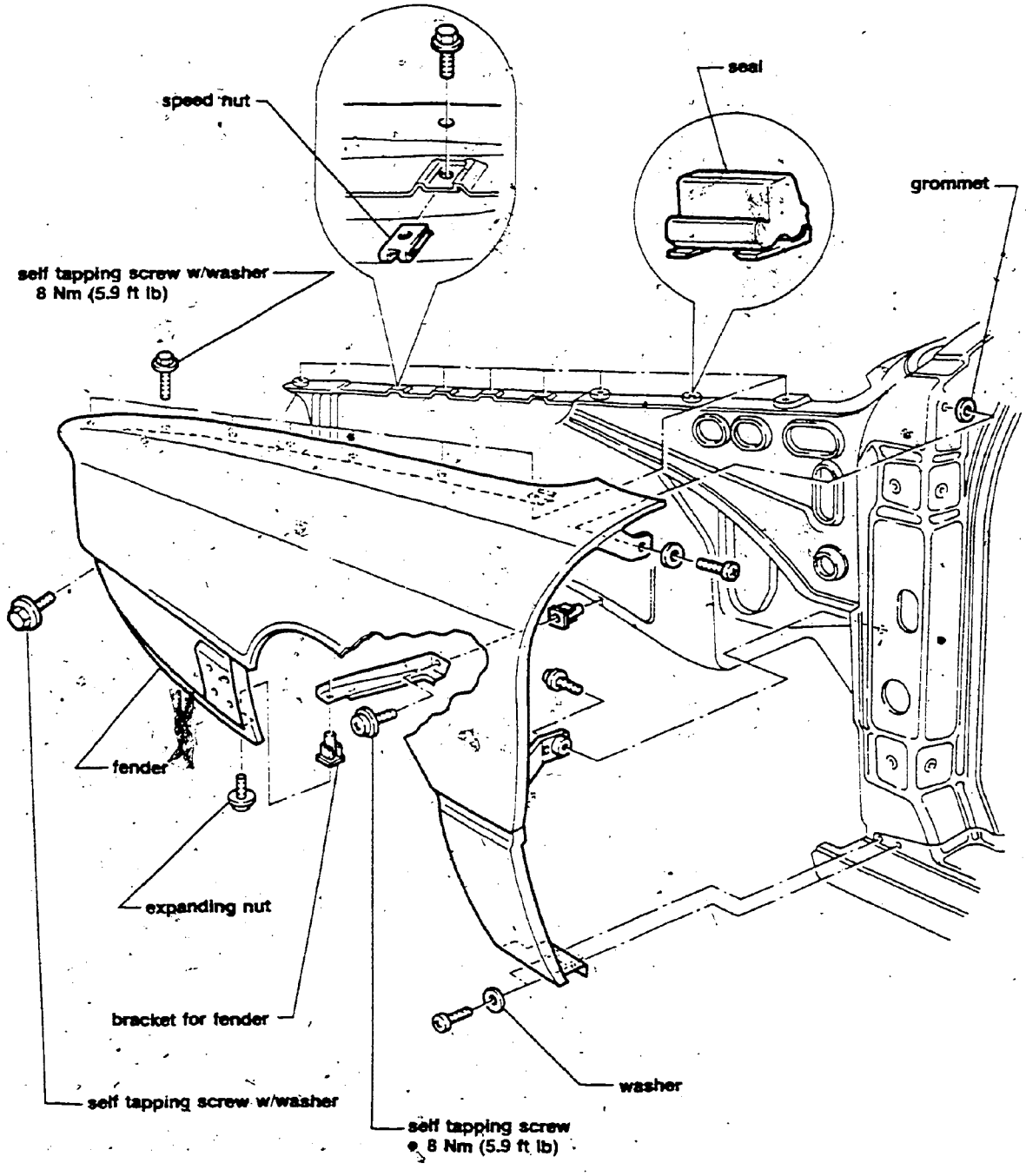

cardiagn.com

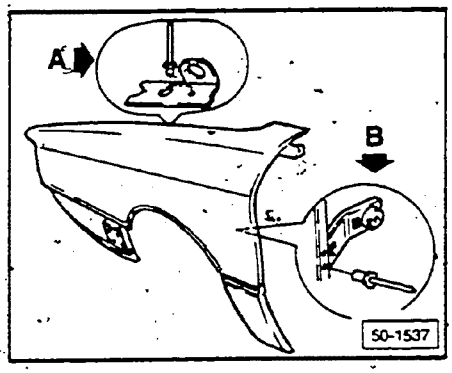

Front fender, removing

- remove front bumper (see Repair Group 63)
- remove wheel house liner (see Repair Group 66)

Front fender, installing

Reinstall all components in reverse order of removal, noting the following:

- install rivet for hood support bracket (**arrow A**)
- install rivet for door retainer (**arrow B**)

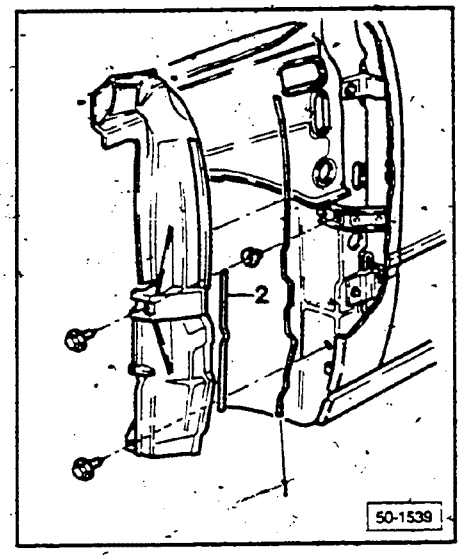

- install strips of sealing cord, **1**, **2** and bolt filler plate **A** to retainer
  1 = 480mm (approximately 19 in.) long, 7.0mm (9/32 in.) diameter
  2 = 250mm (approximately 10 in.) long, 7.0mm (9.32 in.) diameter

Note

Use sealing cord Part No **AKD 497 010 04** or equivalent and mold to 7.0mm (9/32 in diameter.

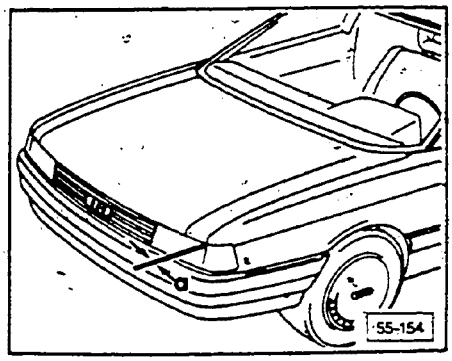

Adjusting front fender, hood gap

- loosen all fender bolts
- with the fender bolts loosened, adjust gap by moving fender
  a = 4.5 ± 1.0mm (11/64 = 3/64 in.)

CAUTION

Part numbers are for reference only. Always check with your Parts Department for latest information.

cardiagn.com

Index

Hood
- adjusting 55.3
- cable 55.5
- fender, adjusting cap 55.4
- gas–filled strut 55.4
- lock assembly 55.2
- lock pins, rubber buffer, adjusting 55.3
- removing/installing 55.3

Hood (Coupe)
- adjusting 55.10
- cable 55.12
- fender, adjusting gap 55.11
- gas–filled strut 55.11
- lock assembly 55.9
- lock pins, rubber buffer, adjusting 55.10
- removing/installing 55.10

Rear lid
- adjusting gap 55.7
- gas–filled strut 55.7
- hinge, strut 55.6
- lock assembly 55.8

Rear hatch (Coupe)
- adjusting gap 55.14
- assembly 55.13
- gas–filled strut 55.15
- lock assembly 55.16
- removing/installing 55.14

cardiagn.com

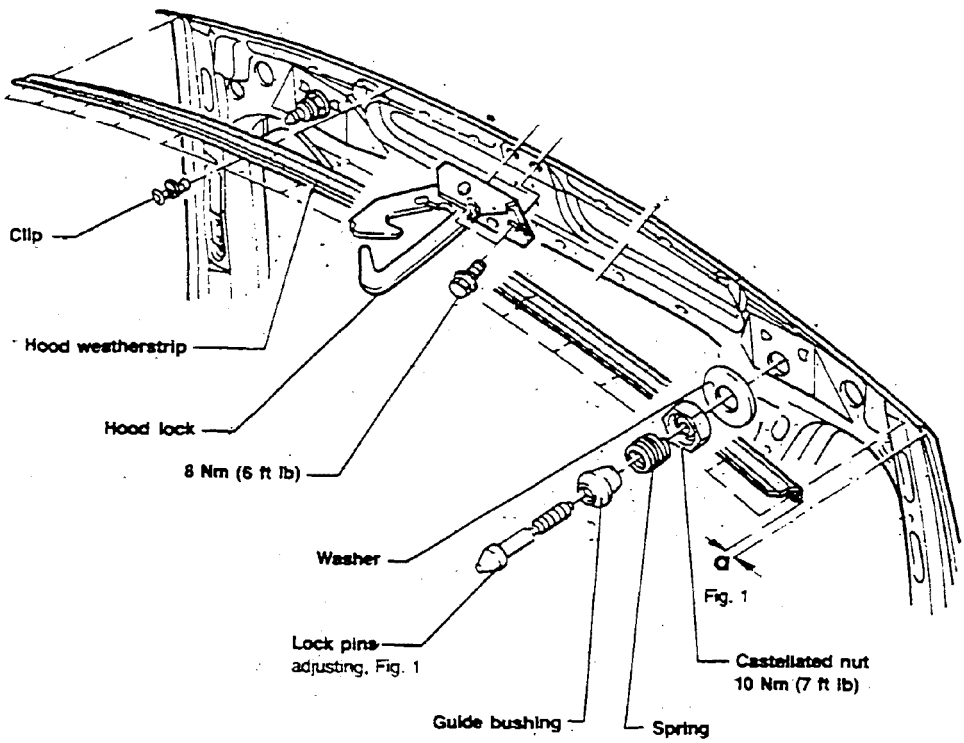

55-146 I

cardiagn.com

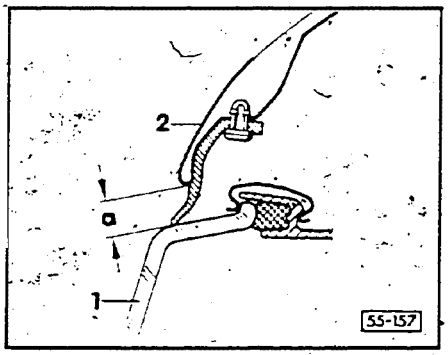

▶ **Fig. 1 Hood lock pins, adjusting**

- adjust dimension **a** = 9 ± 2mm (3/8 ± 5/64 in.)
- fully screw in rubber buffer
  1 = headlamp
  2 = hood

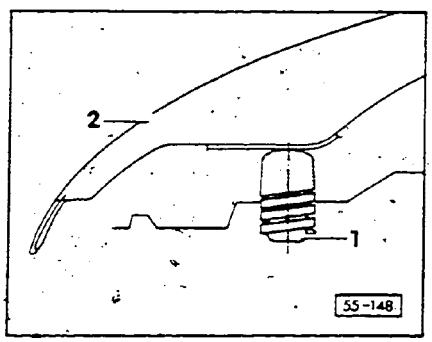

▶ **Fig. 2 Hood rubber buffer, adjusting**

- adjust lock pins
- adjust rubber buffer **1** so hood **2** is flush with fender

Hood, removing/installing

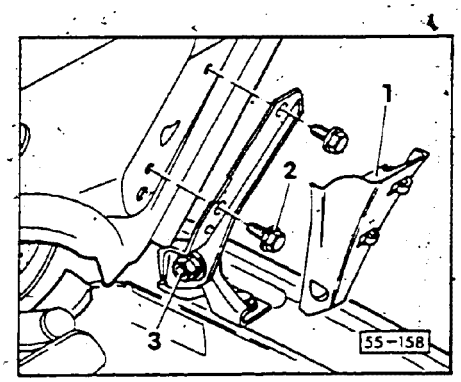

▶ **Removing**

- remove hose to windshield washer jet
- remove hinge cover **1**
- remove bolts **2**

Installing

- install in reverse order of removal

Hood, adjusting

- screw in bolts **2**
  - hand tighten only
- carefully push hood in toward windshield until flush with fenders
- tighten bolts **2**
  - 21 Nm (15.5 ft lb)
- loosen bolts **3**
- adjust hood height to match fenders
- tighten bolts **3**
  - 15 Nm (11 ft lb)

cardiagn.com

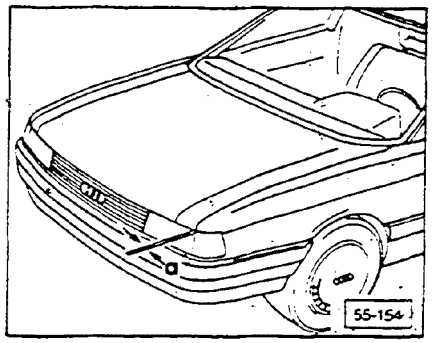

Adjusting hood to fender gap

- loosen fender bolts
- move fender to set gap **a**
  a = 4.5 ÷ 1.0 mm (11/64 ÷ 3/64 in.)

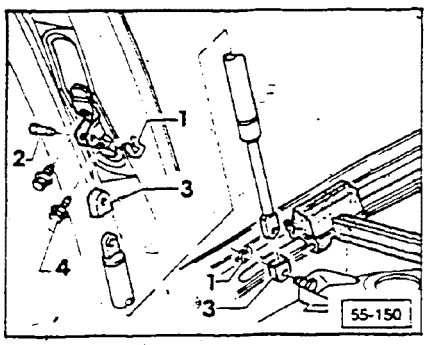

Hood gas-filled strut, replacing

- raise and support hood
- remove clip **1**
- remove pin **2**, protective cap **3**, combination bolt **4**
  - torque 8 Nm (6 ft lb)
- release gas from strut before discarding

Gas-filled struts, discarding

Note

After replacing gas-filled strut, gas should be released from unserviceable unit before discarding.

- put on protective goggles

> **WARNING**
>
> Never squeeze strut in vise in area other than shown. To do so can cause strut caps on either end to pop off and release spring, which is under high pressure.

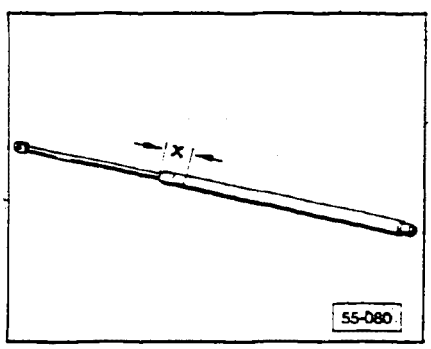

- clamp first 50 mm (2.0 in.) of strut cylinder in vice as shown (**X**)
- using hack saw, cut cylinder open immediately to right of vise (**arrow**)

Note

Cover area being cut open with rag to trap oil when it squirts out.

cardiagn.com

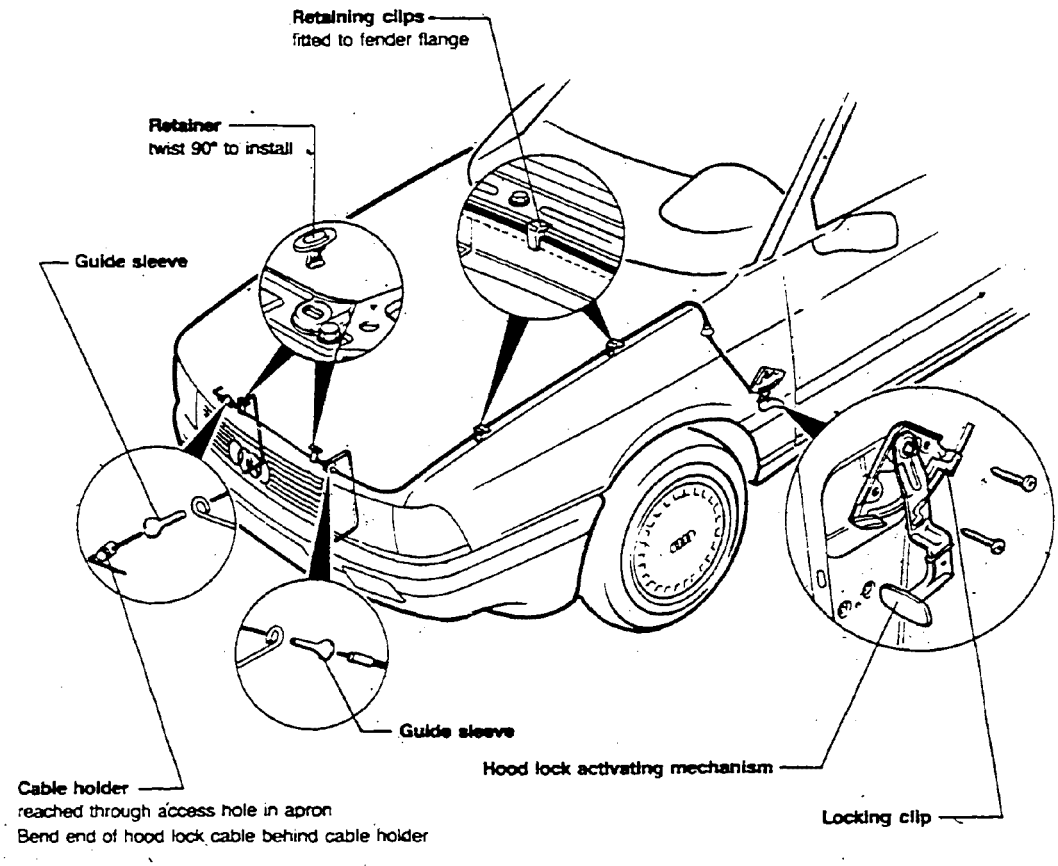

55-145

cardiagn.com

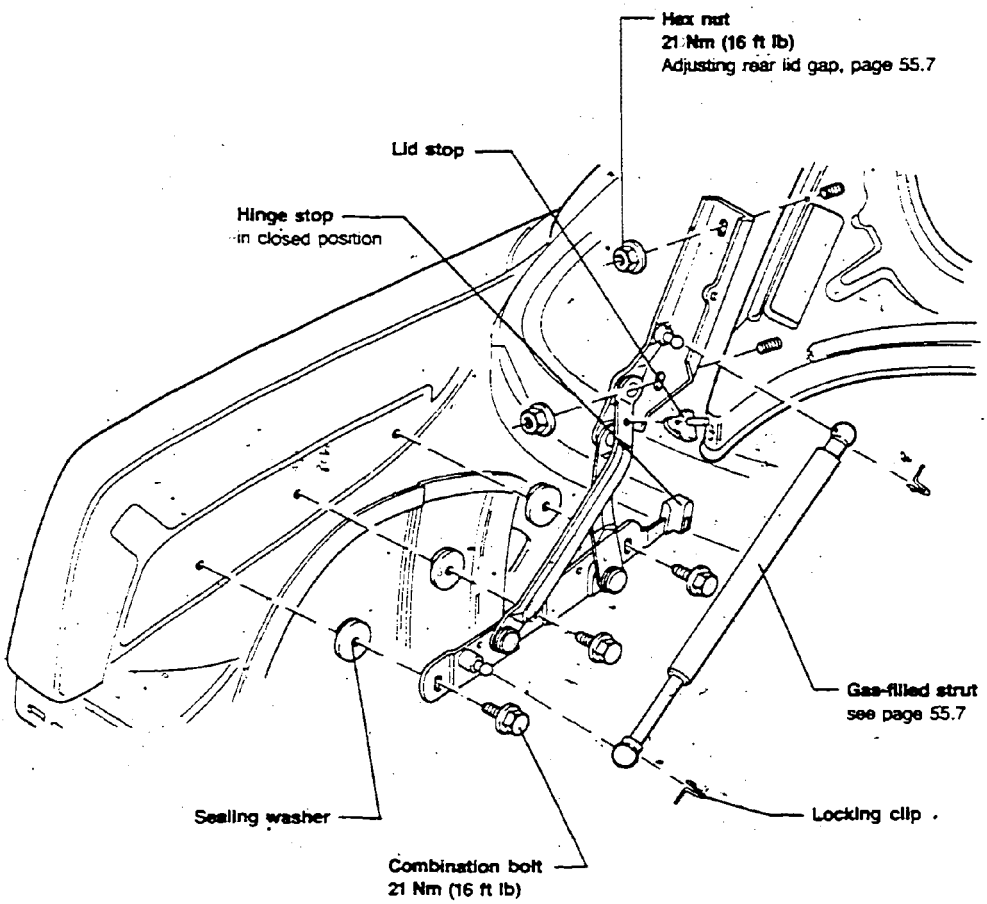

55-151

cardiagn.com

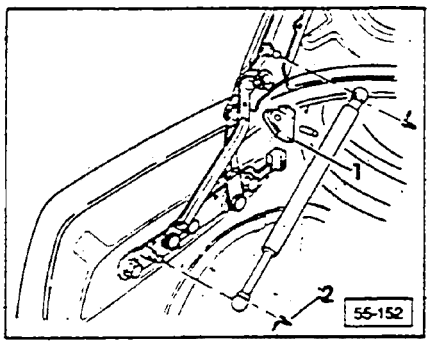

Rear lid gas-filled strut, replacing

- drive out pin from stop **1** on both hinges
- remove stop

Note

If stop is not removed, gas-filled strut can be pressed off ball head, but **cannot** be pressed back in again.

- support rear lid
- remove locking clip **2**
- press gas-filled strut off ball head
- release gas from strut before discarding, see page 55.4

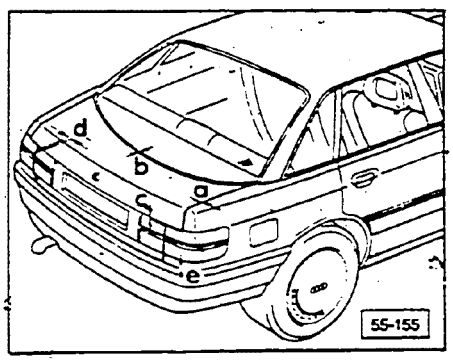

Rear lid, adjusting gap

Measurement	Adjustment
a = 4.4 ± 1.0mm (11/64 ± 3/64 in)	Adjust at hinge
b = 6.5 ± 1.0mm (1/4 ± 3/64 in)	Must be adjusted when quarter panel replaced
c = 9.9 ± 1.0mm (13/32 ± 3/64 in)	Adjusted by moving tail lite assemblies
d = 8.0 ± 0.5mm (5/16 ± 1/64 in)	
e = 9.75 ± 1.0mm (13/32 ± 3/64 in)	Adjusted at rear lid striker plate

cardiagn.com

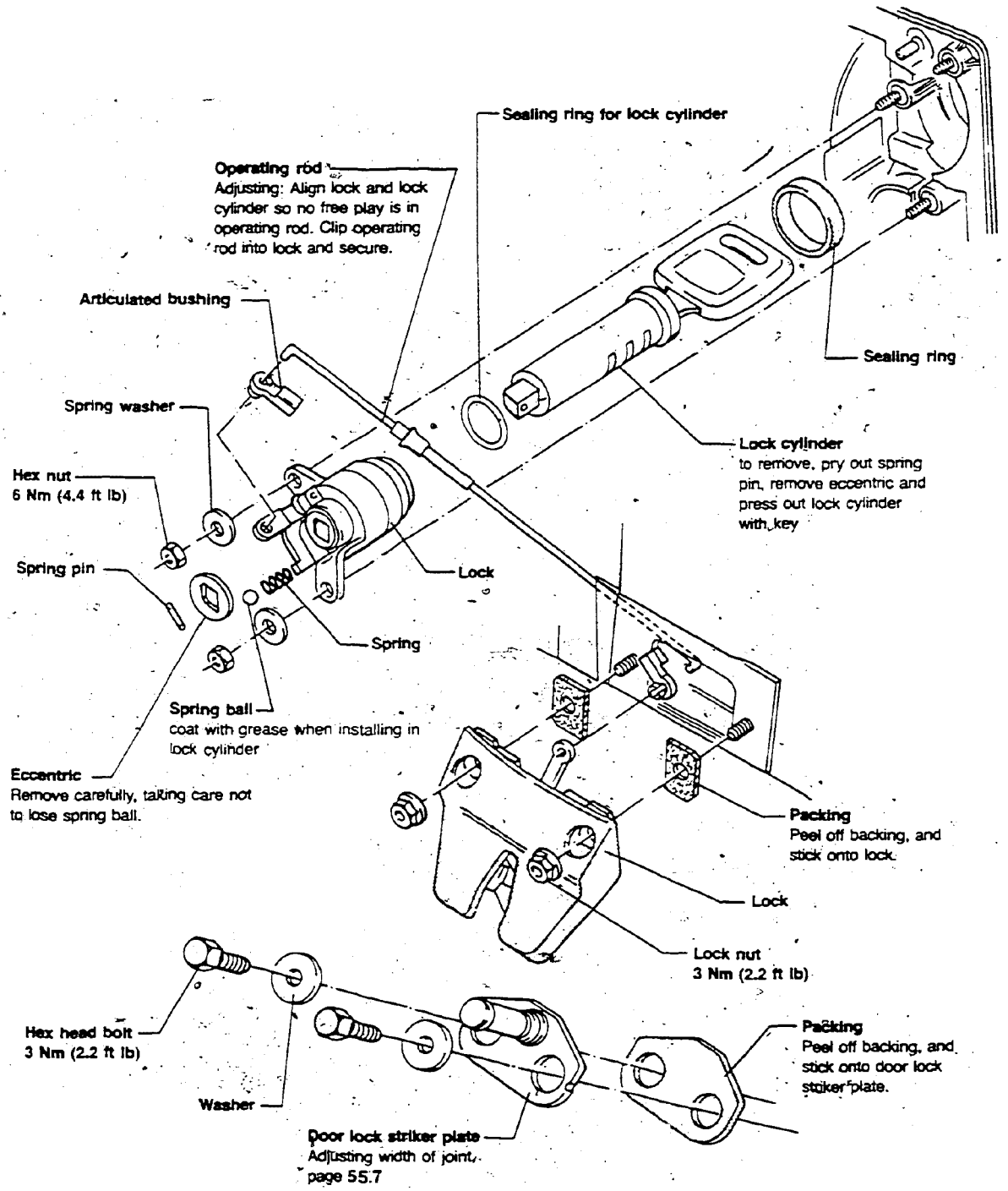

cardiagn.com

THIS FRAME INTENTIONALLY LEFT

BLANK

cardiagn.com

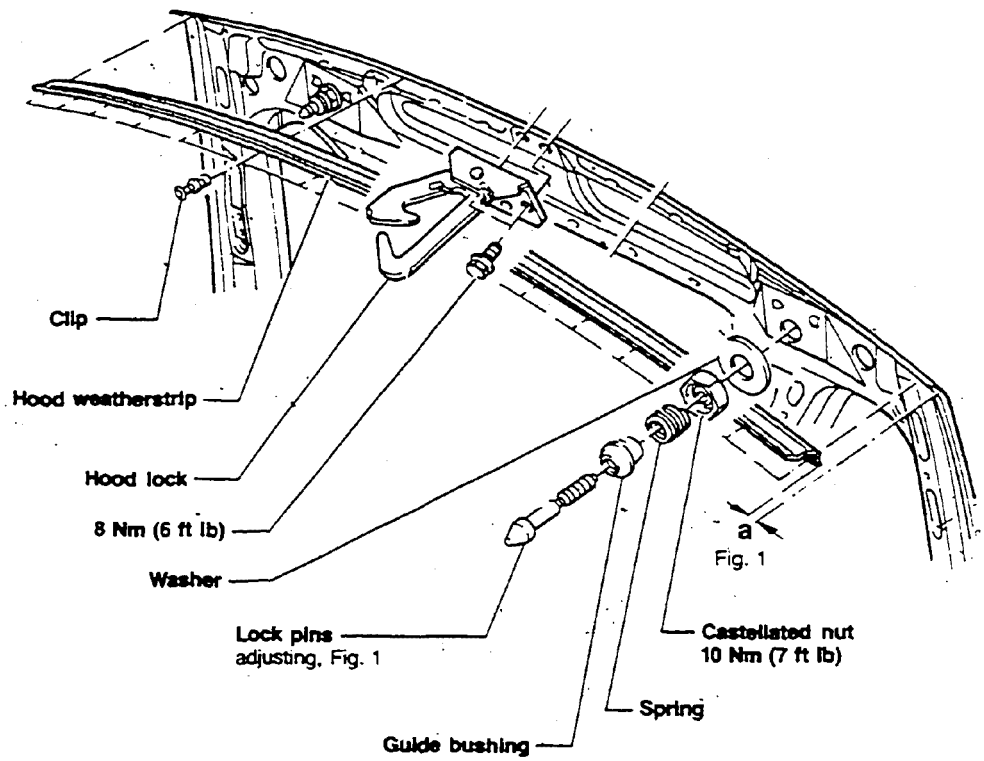

55-146

cardiagn.com

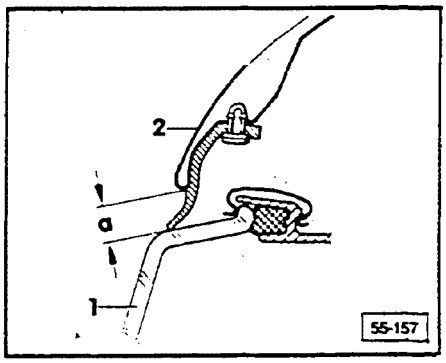

▶ **Fig. 1 Hood lock pins, adjusting**

- adjust dimension **a** = 9 + 2mm (3/8 + 5/64 in.)
- fully screw in rubber buffer
  1 = headlamp
  2 = hood

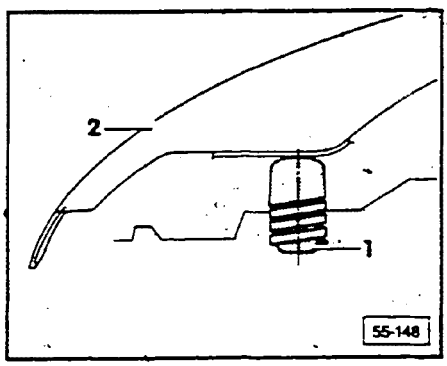

▶ **Fig. 2 Hood rubber buffer, adjusting**

- adjust lock pins
- adjust rubber buffer **1** so hood **2** is flush with fender

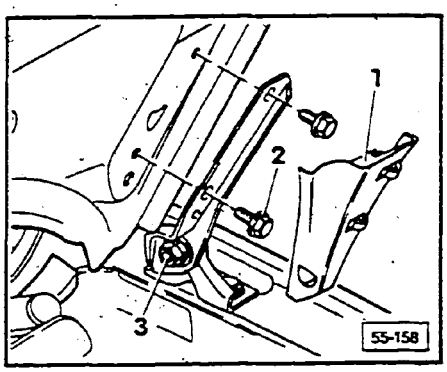

Hood, removing

▶

- remove hose to windshield washer jet
- remove hinge cover **1**
- remove bolts **2**

Hood, installing

Reinstall all components in reverse order of removal.

Hood, adjusting

- screw in bolts **2**
  - hand tighten only
- carefully push hood in toward windshield until flush with fenders
- tighten bolts **2**
  - 21 Nm (15.5 ft lb)
- loosen bolts **3**
- adjust hood height to match fenders
- tighten bolts **3**
  - 15 Nm (11 ft lb)

cardiagn.com

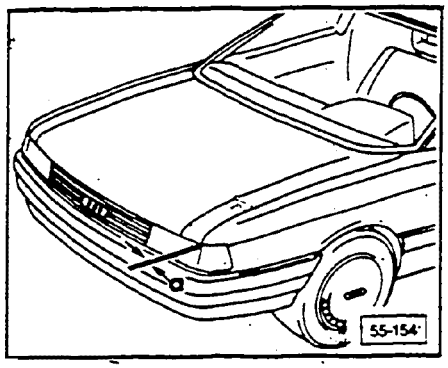

Adjusting hood to fender gap

- loosen fender bolts
- move fender to set gap **a**
  - **a** = 4.5 + 1.0 mm (11/64 + 3/64 in.)

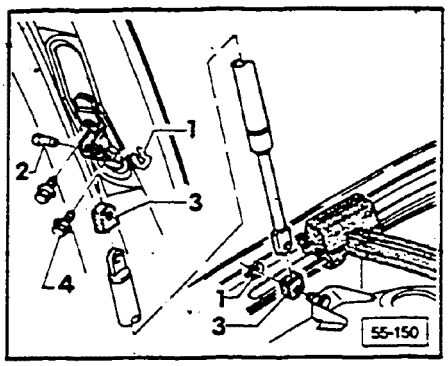

Hood gas-filled strut, replacing

- raise and support hood
- remove clip **1**
- remove pin **2**, protective cap **3**, combination bolt **4**
  - torque 8 Nm (6 ft lb)
- release gas from strut before discarding

Gas-filled struts, discarding

Note

After replacing gas-filled strut, gas should be released from unserviceable unit before discarding.

- put on protective goggles

> **WARNING**
>
> Never squeeze strut in vise in area other than shown. To do so can cause strut caps on either end to pop off and release spring, which is under high pressure.

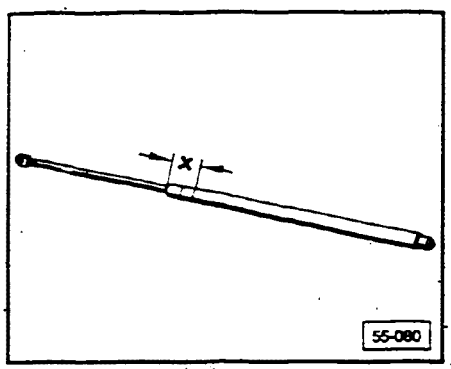

- clamp first 50 mm (2.0 in.) of strut cylinder in vice as shown (**X**)

Note

Cover area being cut open with rag to trap oil when it squirts out.

- using hack saw, cut cylinder open immediately to right of vise

cardiagn.com

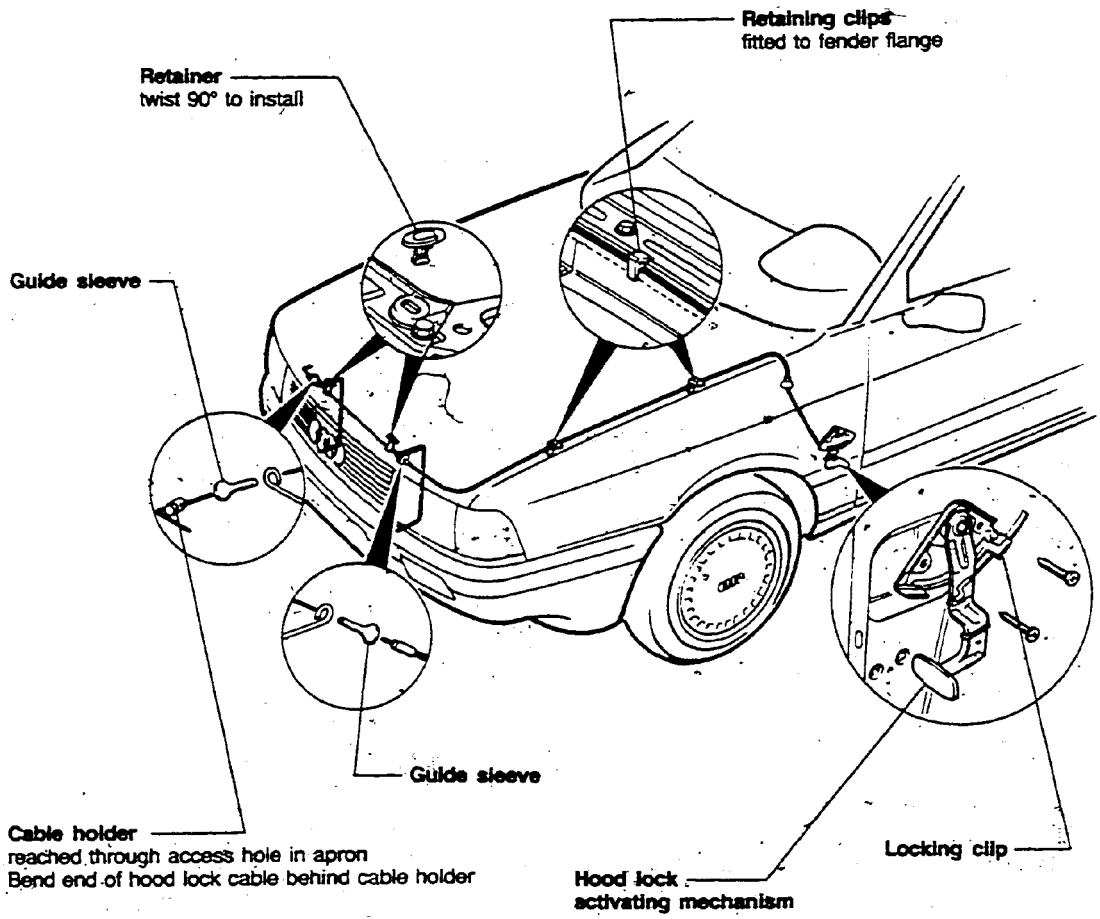

55-145

cardiagn.com

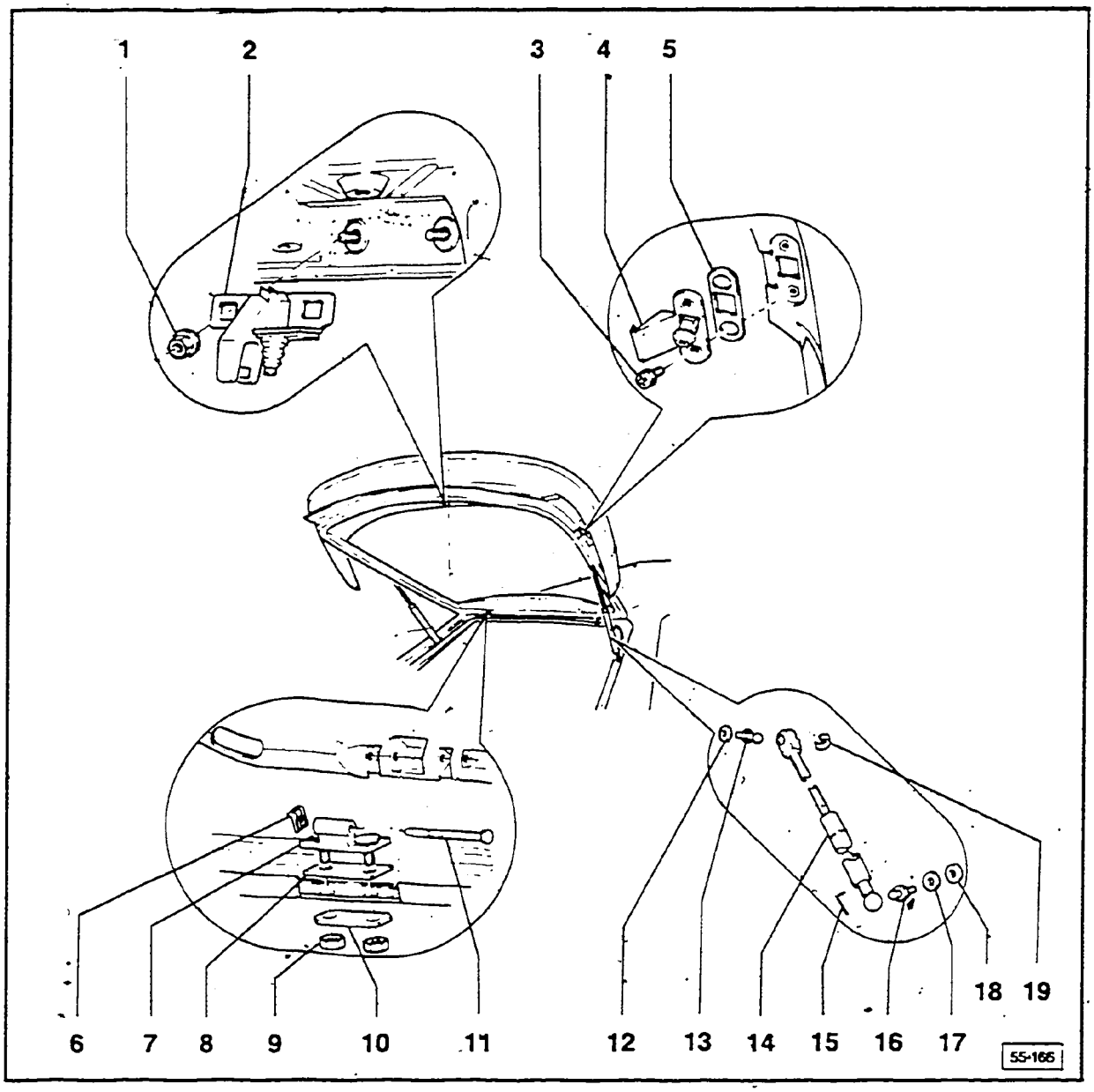

1 — Hex head nut
8 Nm (6 ft lb)

2 — Striker plate
has contact switch for luggage compartment light

3 — Flat head screw/washer
4 Nm (3 ft lb)

4 — Adjustment shim

5 — Seal

6 — Lock washer

7 — Hinge

8 — Gasket

9 — Hex head nut
21 Nm (15.5 ft lb)

10 — Base

11 — Hinge pin

12 — Washer

13 — Pin
10 Nm (7 ft lb)

14 — Gas-filled spring

15 — Clip
10 Nm (7 ft lb)

16 — Stud
on body side

17 — Washer
on body side

18 — O-ring
on body side

19 — Clip
on body side

cardiagn.com

Rear hatch, removing

- remove trim for rear roof frame, see Repair Group 70
- remove hatch trim, see Repair Group 70
- disconnect rear wiper
- remove wire harness from hatch
- pull out cable terminal for rear wiper from housing

Note

To assist in reinstalling washer hose, secure to hatch with wire.

- unclip washer jet and remove hose from hatch

Rear hatch, installing

Reinstall all components in reverse order of removal.

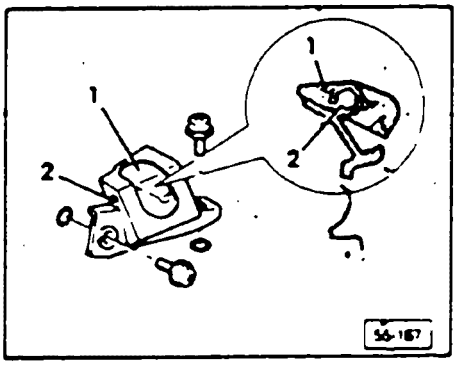

Rear hatch, adjusting

Body side

- push 1 up to stop
- tighten allen screw 2
  - 0.4 Nm (3.5 in lb)
- close hatch to set components in position
- tighten allen screw
  - 6 Nm (4.4 ft lb)

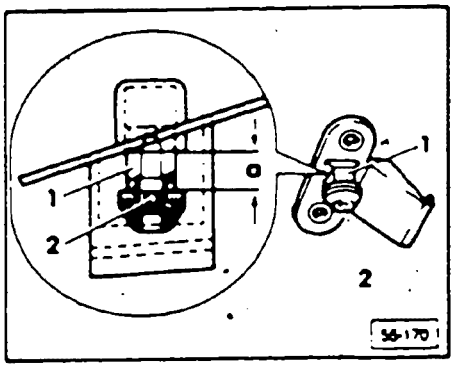

Rear hatch, adjusting

Hatch side

- adjust striker 1 to:
  a = 12.0±1.0mm (15/32 3/64 in)
- tighten 2 to 0.4 Nm (3.5 in. lb)
- close hatch, to set components in position
- open hatch and tighten 2 to 6.0 Nm (4.4 ft lb)

cardiagn.com

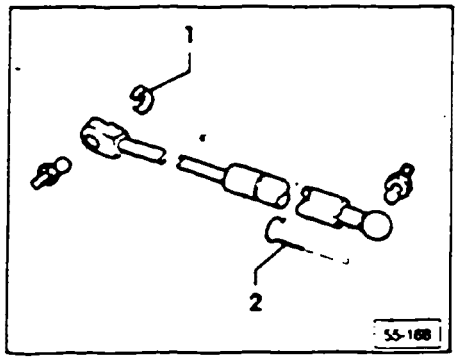

Hatch gas-filled strut, replacing

- raise and support hatch
- remove clips 1, 2
- remove strut
- release gas from strut before discarding

Gas-filled struts, discarding

Note

After replacing gas-filled strut, gas should be released from unserviceable unit before discarding.

- put on protective goggles

WARNING

Never squeeze strut in vise in area other than shown. To do so can cause strut caps on either end to pop off and release spring, which is under high pressure.

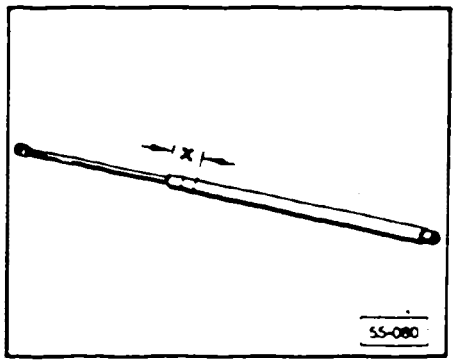

- clamp first 50 mm (2.0 in.) of strut cylinder in vice as shown (X)

Note

Cover area being cut open with rag to trap oil when it squirts out.

- using hack saw, cut cylinder open immediately to right of vise

cardiagn.com

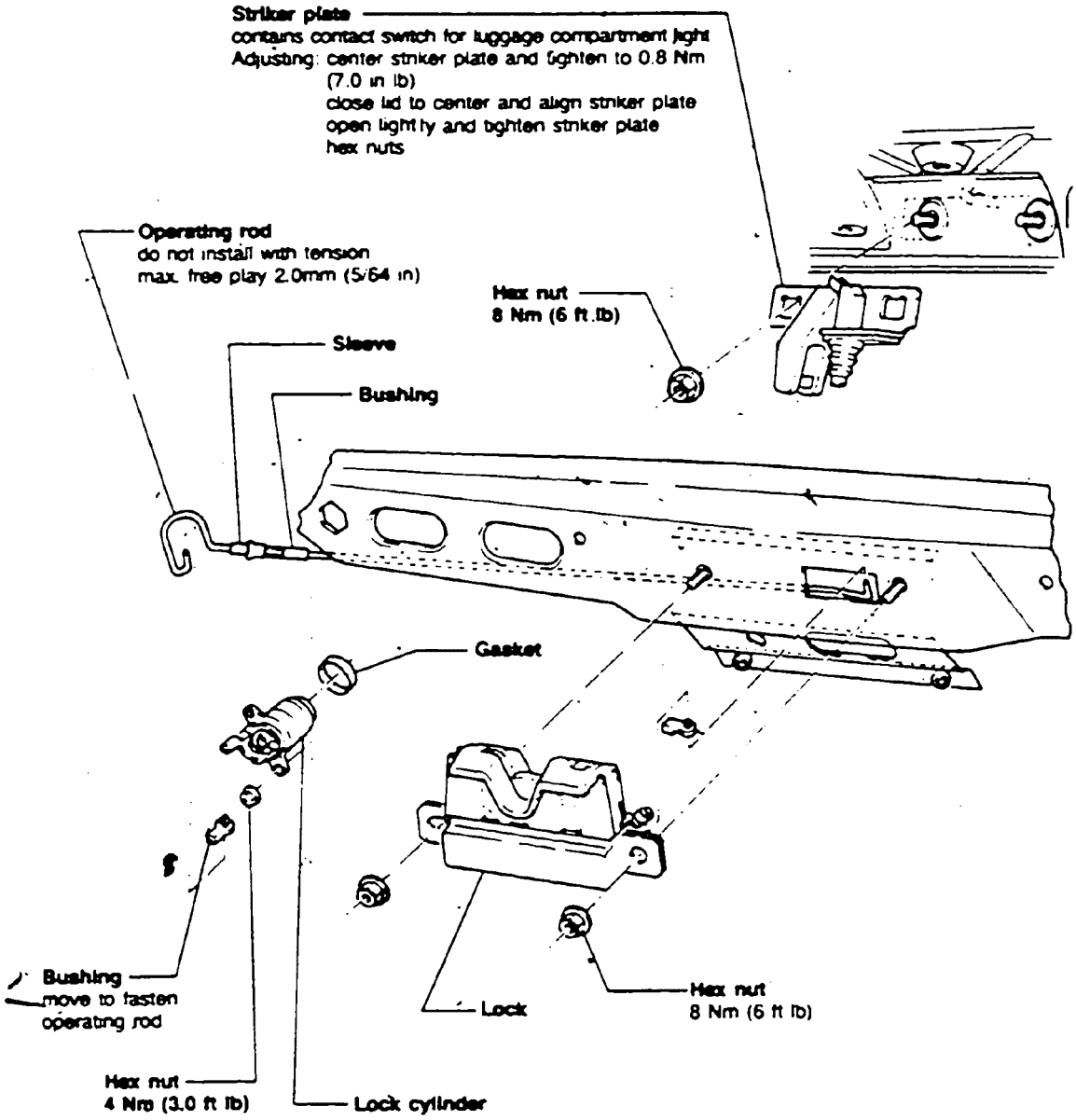

cardiagn.com

Index

Bi-pressure pump
- removing/installing 57.16

Bi-pressure system
- troubleshooting 57.22

Bowden cable
- replacing 57.8

Central locking system
- assembly 57.15
- electrical, troubleshooting 57.18

Door component carrier
- adjusting 57.13
- dimensions 57.14

Door lock
- ★ assembly 57.7, 57.9
- removing/installing 57.8

Front door
- removing/installing 57.3
- adjusting 57.11
- adjusting gap 57.12
- adjusting height 57.12
- prevention of wind noises 57.13
- slot molding 57.3

Fuel tank flap activator
- removing/installing 57.17a

Lock cylinder
- assembly 57.7

Lock rod
- assembly 57.7
- removing/installing 57.8

Lower door hinge
- lubrication 57.3

Master activator
- removing/installing 57.16

Position spring
- installing 57.10

Rear door activator
- removing/installing 57.17

Rear lid activator
- removing/installing 57.17

Turn clip
- installing 57.10

Window frame
- assembly 57.4

Window regulator
- removing/installing 5

Window seal plugs
- installing 57.6

Central locking (Coupe)
- assembly 57.41
- fuel tank flap activator, removing/installing 57.42a
- master activator, removing/installing 57.42
- rear lid activator, removing/installing 57.42
- troubleshooting 57.43

Door glass (Coupe)
- ★ removing/installing 57.31

Door handle (Coupe)
- assembly 57.39
- handle trim cover, removing 57.40
- lock clip, installing 57.40
- position spring, installing 57.40

Door lock (Coupe)
- assembly 57.35
- bowden cable, removing/installing 57.38
- removing/installing 57.37

Front door (Coupe)
- assembly 57.26
- coverplate, adjusting 57.32
- lower door hinge, lubricating 57.27
- ★ removing/installing 57.27, 27a

Heated lock cylinder
- troubleshooting 57.23

Window regulator (Coupe)
- adjusting 57.34
- ★ assembly 57.28
- ★ removing/installing 57.29

★ **NEW INFORMATION** since last filming

cardiagn.com

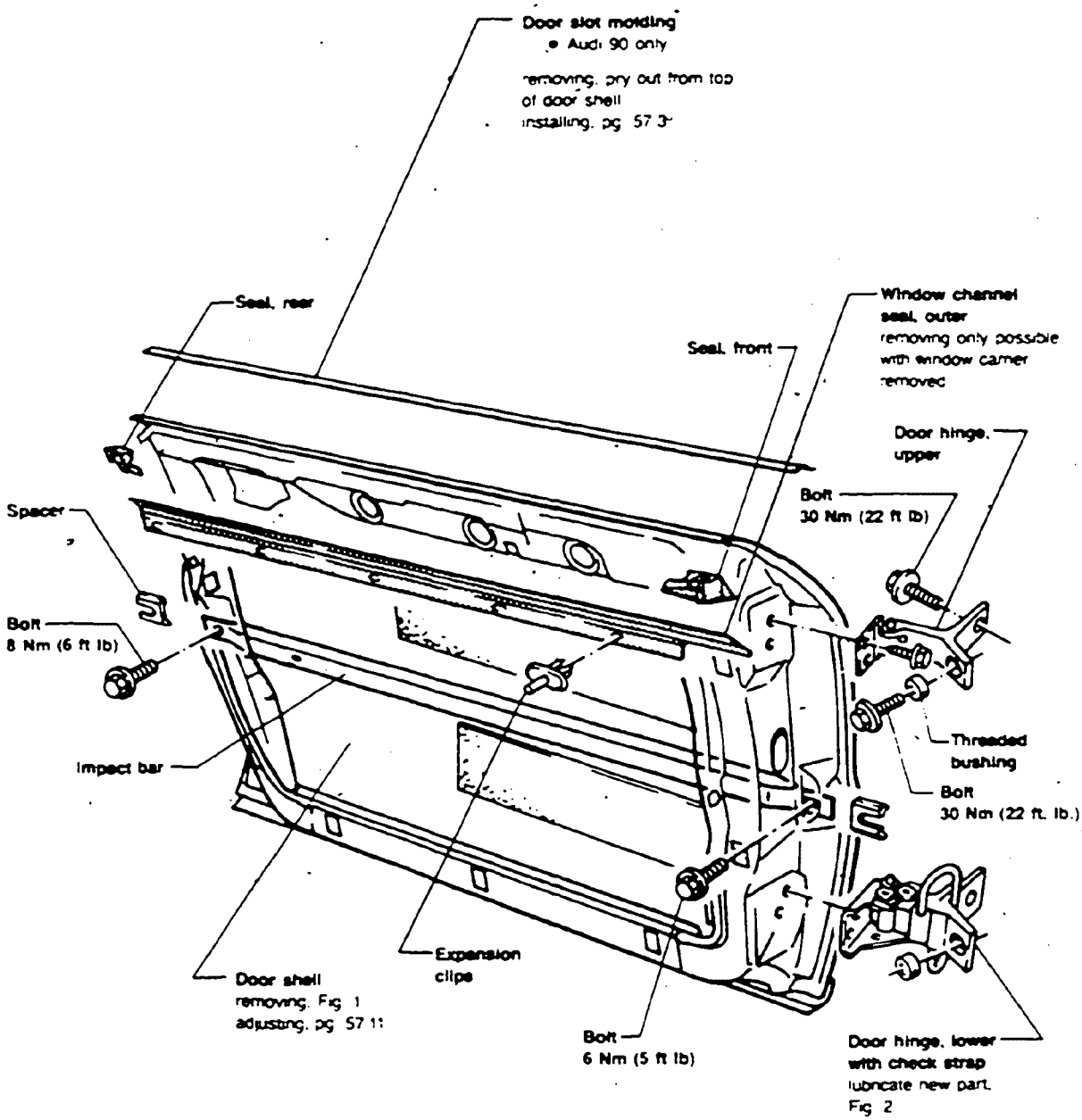

cardiagn.com

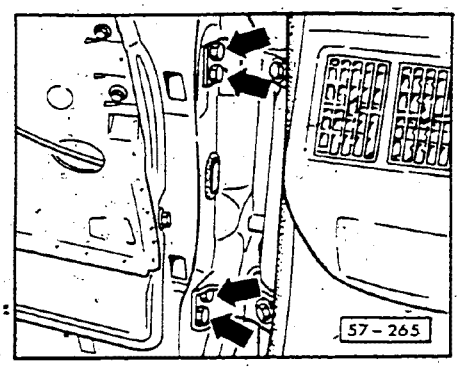

▶ **Fig. 1 Front door, removing/installing**

Removing

- remove hex head bolts (**arrows**)

Installing

Install in reverse order, note the following:
- install hex head bolts, see page 57.15

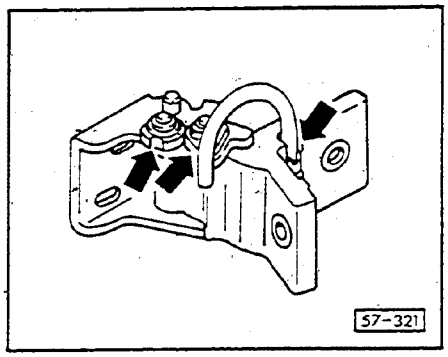

▶ **Fig. 2 Lower door hinge, lubrication**

- apply lubricant **AOS 126 000 05** or equivalent to points shown

Door slot molding, removing/installi

Removing

- pry out from top of door shell

Installing

- clean molding channel with 3M® General Purpose Adhesive Cleaner or equivalent
- place 3.0 mm (1/8 in.) bead of **AKD 476 KD 505** into molding channel
- position molding onto door shell
- press molding into place

cardiagn.com

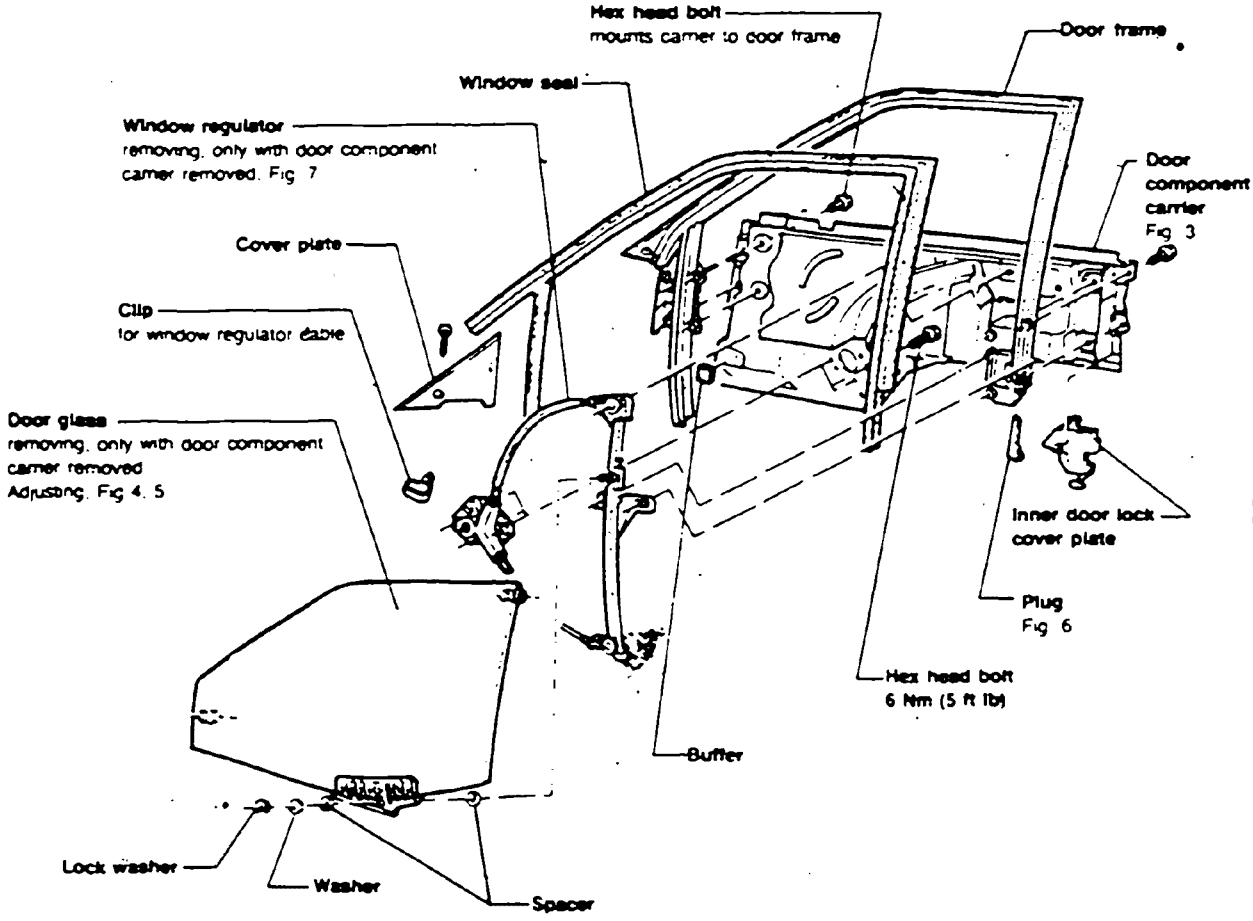

57-255

cardiagn.com

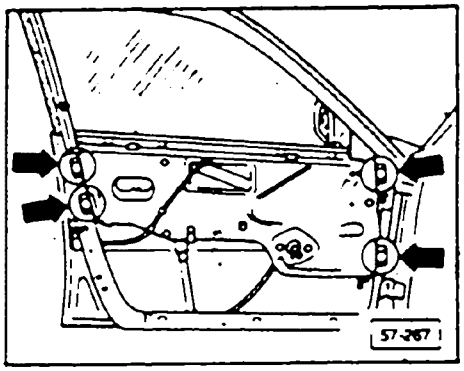

▶ **Fig. 3 Carrier for door components, removing/installing**

Removing

- remove front door trim panel (see Repair Group 70)
- remove Bowden cable from inner door opening mechanism

Installing

Install in reverse order, note the following:
- check door shell adjustment, adjusting page 57.15
- adjust door component carrier support, page 57.15
- torque hex head screws (**arrows**) 20 Nm (15 ft lb)

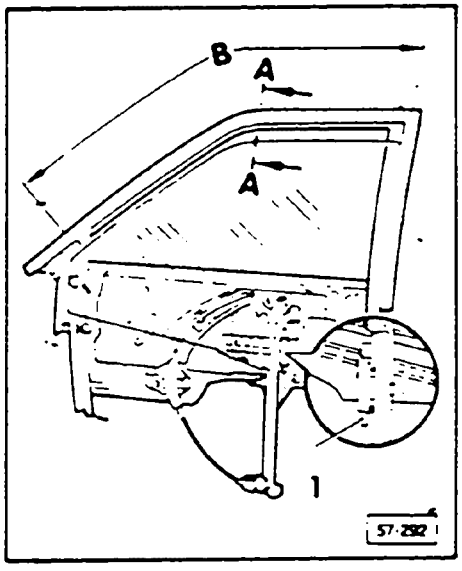

▶ **Fig. 4 Adjusting window in carrier**
- section A-A
- adjust window stop from window lifter **1**
- contact area **B** of window to inner window weatherstrip

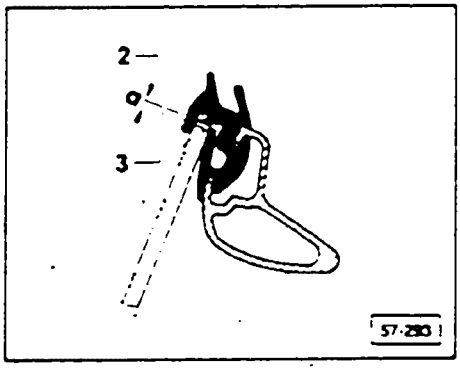

▶ **Fig. 5 Adjusting window glass**

- adjust window glass with door closed
- adjust upper stop of window regulator so inner sealing lip **2** in area **B** (see Fig. 4) contacts upper edge of window
  a = 0.5 mm (1/32 in.)

Note

A minimum pre-load of 0.5 mm (1/32 in.) when sealing lip **2** contacts window will eliminate leaks.

cardiagn.com

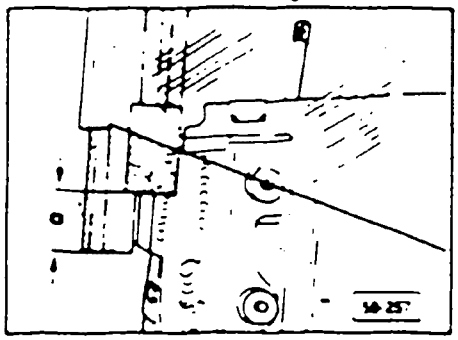

▶ Fig. 6 **Plugs**

- insert into window guide from below
  - a = 65 mm (2 6 in)
  - measured from end of window channel

Note

The plug is used as a seal and an anti-noise measure

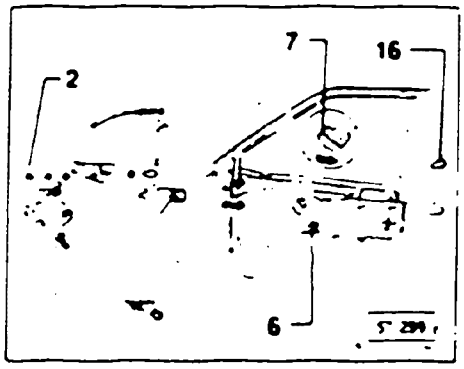

▶ Fig. 7 **Window regulator, removing/installing**

Removing

- remove carrier for door components Fig 3
- remove lock washer 2
- remove mounting washer buffer
- pull out window from window lifter bolt
- bend clip 7 in direction of arrow and press Bowden cable out of clip
- unscrew hex head nuts 6
- unscrew hex head bolts 16

Installing

Install in reverse order, note the following

- install hex head bolts
  - 6 Nm (5 ft lb)
- place buffers between window and carrier
- check and adjust window if necessary. Fig 4, 5

cardiagn.com

THIS FRAME INTENTIONALLY LEFT

BLANK

cardiagn.com

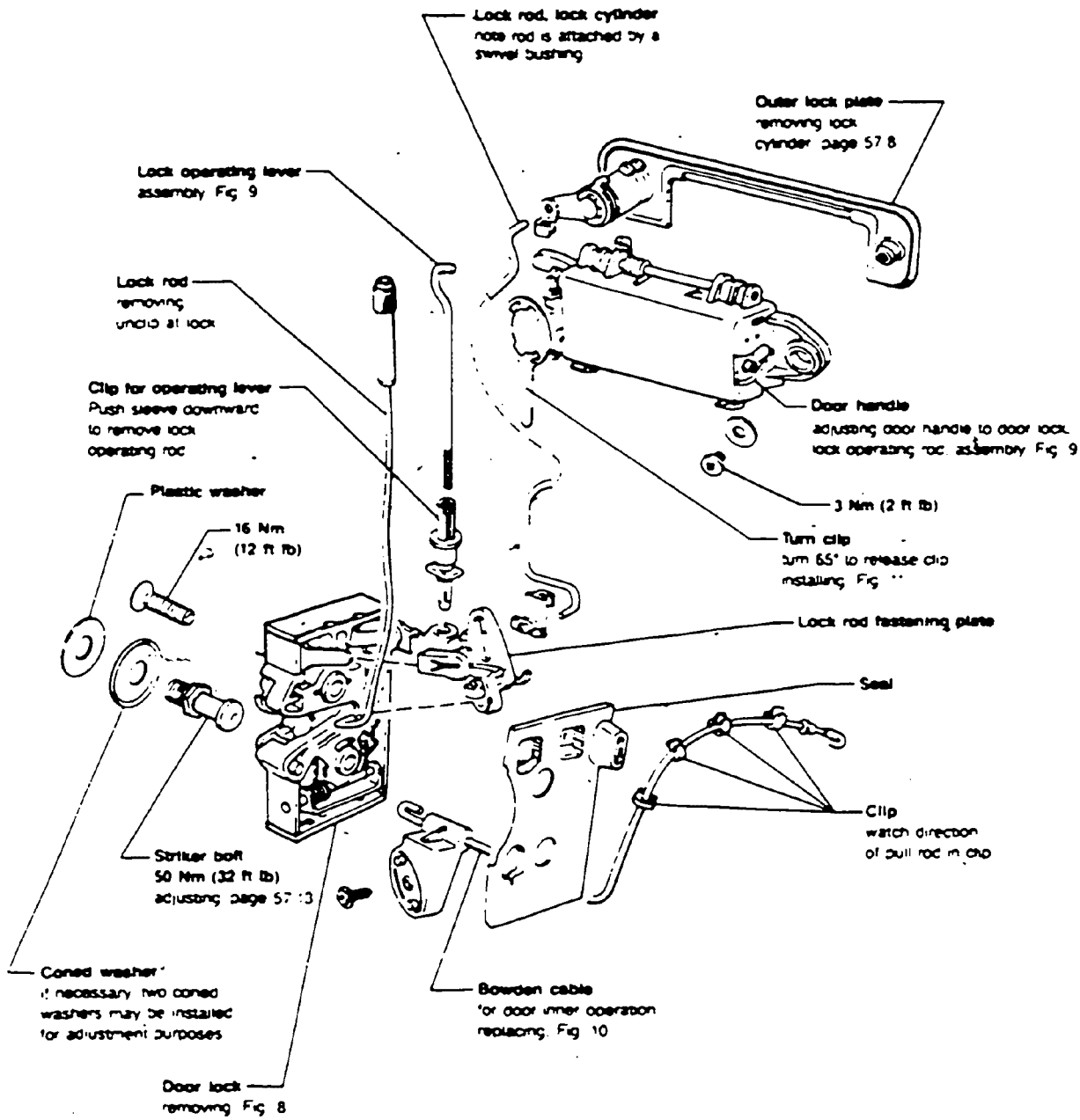

cardiagn.com

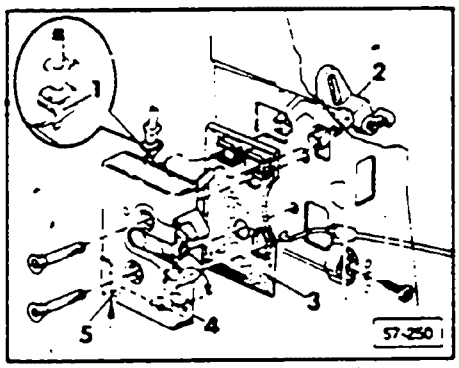

▶ Fig. 8 **Door lock, removing/installing**

Removing

- remove front door trim (see Repair Group 70)
- release operating rod clip and pull out operating rod
- unhook bowden cable
- pull out door lock from part **2**
- remove seal **3**

Installing

Install in reverse order. Note the following: To re-hook bowden cable, pull lever **4** in direction of **arrow**. Insert screwdriver into hole **5** to lock cable into place.

- torque all bolts to 16 Nm (12 ft lb)

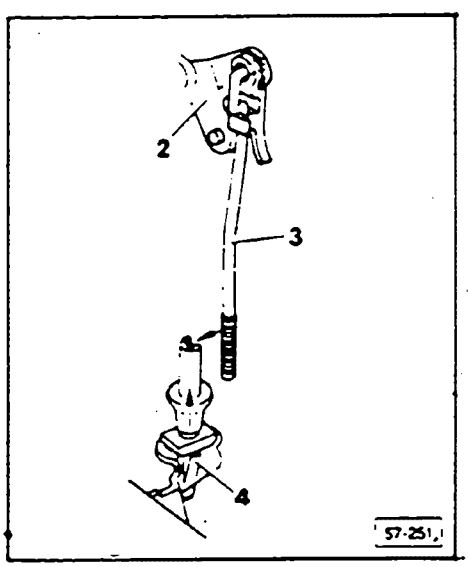

▶ Fig. 9 **Lock operating rod, removing/installing**

Removing

- place bushing into operating rod **2**
- put operating rod **3** into lever
- insert mounting clip **4** into door lock release lever
- check operating rod free play in clip **4**, without putting undue strain on the door lock release lever
  - 1.0 mm (3/64 in.) maximum free play

Installing

Install in reverse order.

- to adjust move sleeve upwards on operating clip **4**

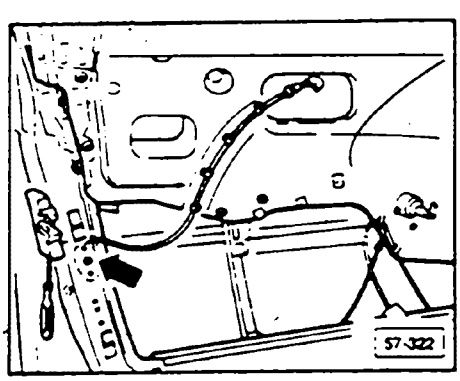

▶ Fig. 10 **Replacing inner door lock bowden cable**

Removing

- remove door trim (see Repair Group 70)
- unclip bowden cable
- pull bowden cable and lock door lock with screwdriver, Fig. 8
- unhook bowden cable (**arrow**)

Installing

Install in reverse order.

- note how bowden cable is place

cardiagn.com

Note

- door component carrier is installed
- door trim panel removed
- operating rod is detached at operating lever

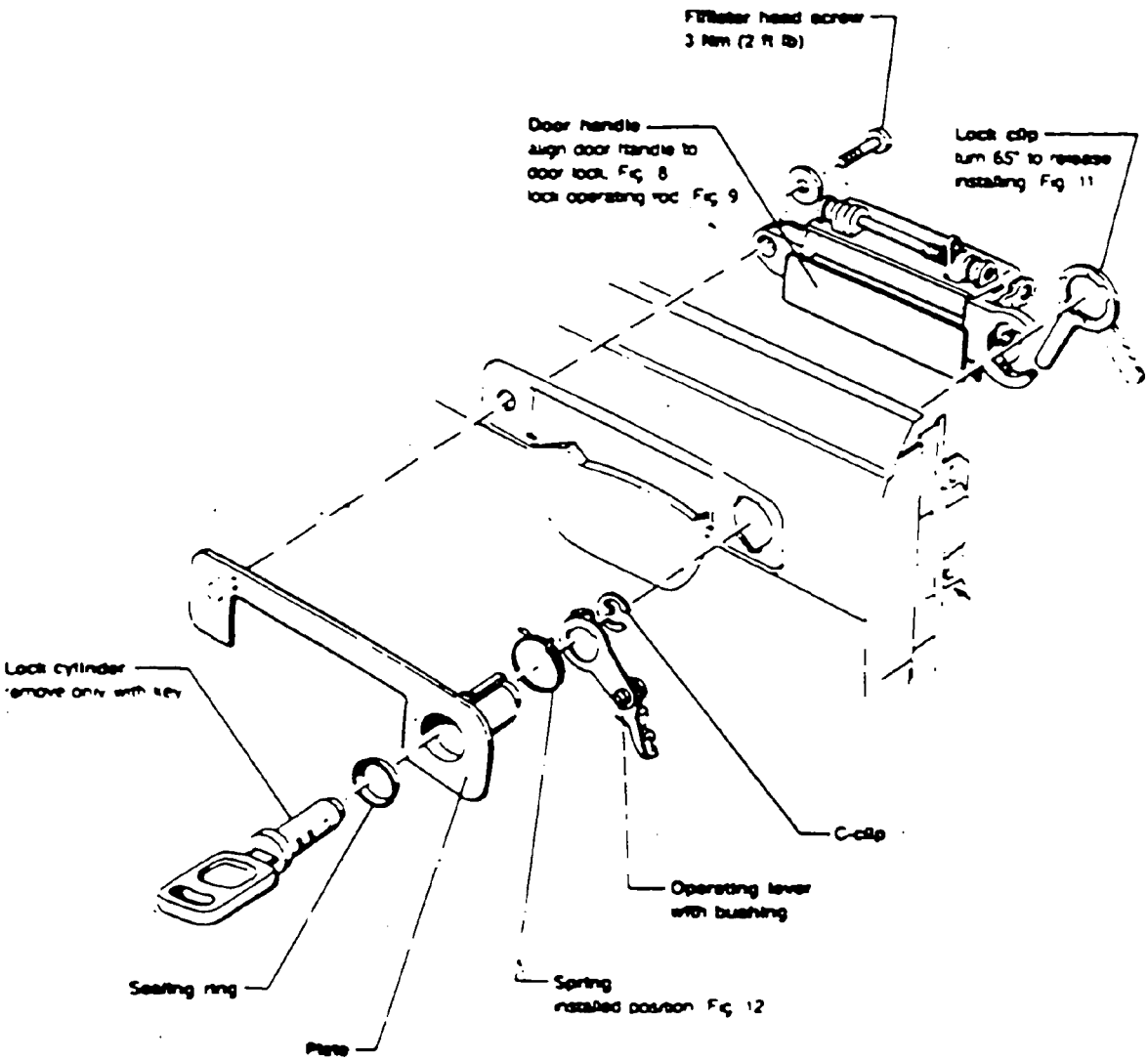

57-300

cardiagn.com

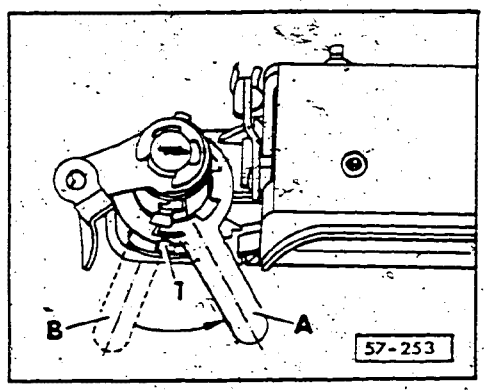

▶ **Fig. 11 Turn clip, installing**

A = lock clip tight in locked position
B = lock clip released

■ indentation **1** in lock clip must line up

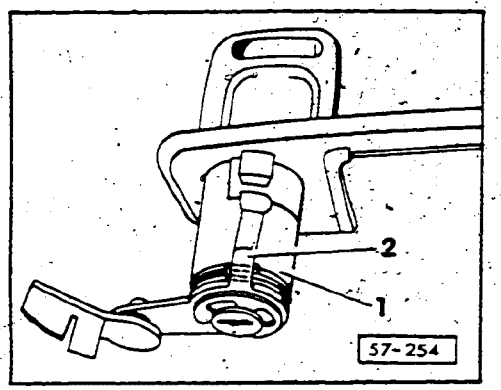

▶ **Fig. 12 Position spring, installing**

Note

When tensioned, the ends of the spring **1** must be positioned to left and right of operating lever **2**.

Pre-tensioning always pushes the operating lever and lock cylinder into center position.

cardiagn.com

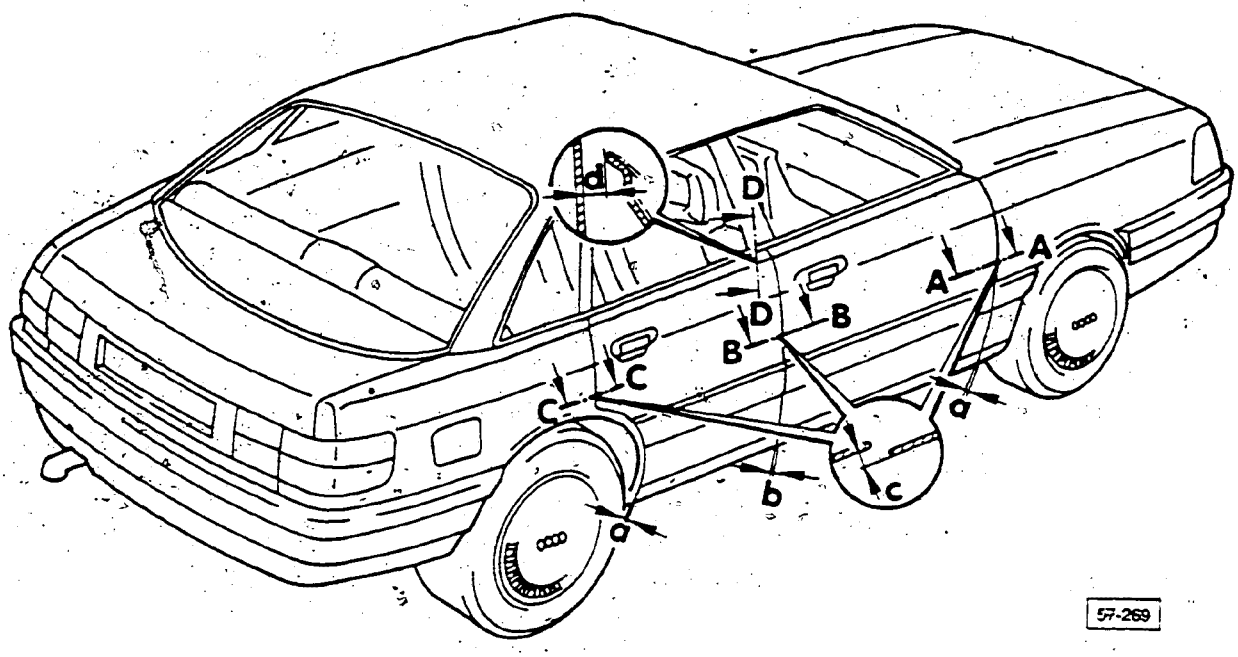

Doors, adjusting

- adjust gap by moving doors with hinges — Fig. 13, 14

  a = 5 ± 1 mm (13/64 ± 3/64 in.)
  b = 5.5 ± 1 mm (7/32 ± 3/64 in.)

- align height with contour of body
  Adjust at hinges (extra-large holes in hinge at the point where hinge fastens to A/B pillar) Fig. 15
- to prevent to wind noises, adjust at door mounting hinges or in rear of doors at striker pin, Fig. 16, 17

  Section A-A, B-B, C-C:
  c = 0.5 ± 0.5 mm (1/64 ± 1/64 in.)

  Section D-D:
  d = 14.5 mm (9/16 in.)

cardiagn.com

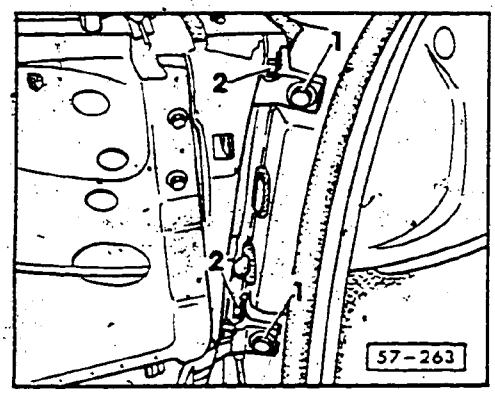

▶ **Fig. 13 Door gap, adjusting**

- with bolts **1** removed, screw out threaded bushing behind until it no longer contacts A-pillar
- loosen bolts **2**, close door and adjust gap by moving the door
  - **a** = 5 + 1 mm (13/64 + 3/64 in.)
- loosen or tighten with angle wrench **US 2598**

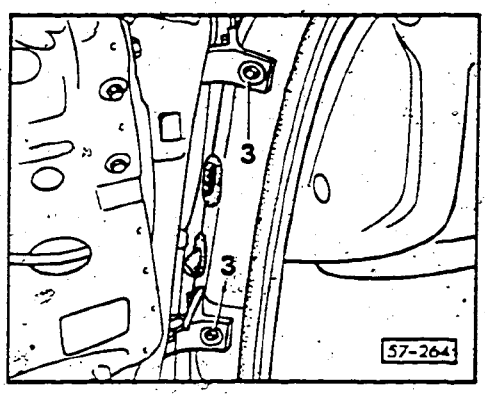

▶ **Fig. 14**

- screw in threaded bushing **3** until it makes contact with A-pillar
- screw in bolts and tighten to 30 Nm (22 ft lb)
- check gap

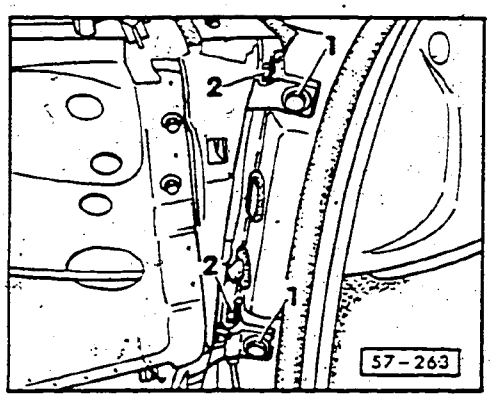

▶ **Fig. 15 Height adjustment**

- loosen bolts **1**, **2**
- loosen or tighten with angle wrench **US 2598**
- move door with hinge
- tighten bolts
  - 30 Nm (22 ft lb)

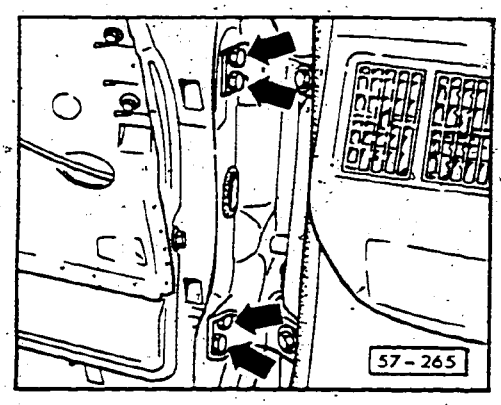

▶ **Fig. 16**

- loosen bolts (**arrows**), move door as required
- tighten bolts
  - 30 Nm (22 ft lb)

cardiagn.com

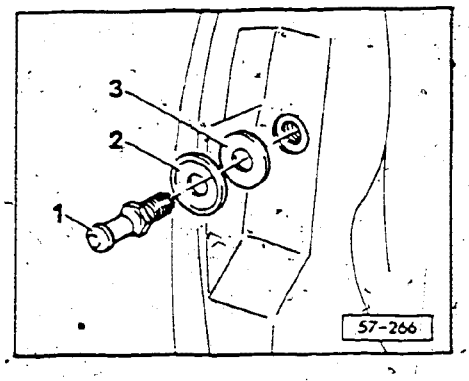

▶ **Fig. 17 Prevention of wind noises**

- adjust the striker pins at the rear of the door
  - striker pin 50 Nm (37 ft lb)

1 = striker pin
2 = dished washer
3 = washer

Note

If necessary, two dished washers can be used.

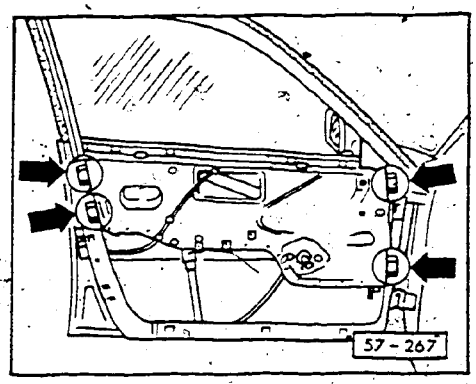

▶ **Fig. 18 Door component carrier, adjusting**

Note

Window and door shell must be adjusted first.

- loosen bolts (**arrows**)
- close door

Two technicians will be required. **Do not** press door shell inwards while performing adjustment.

- press carrier tightly against roof and pillar
  - exert slightly more force than required. Rubber seal will return carrier to proper position
- have second technician (from inside vehicle) tighten first upper then lower bolts
  - 20 Nm (15 ft lb)

cardiagn.com

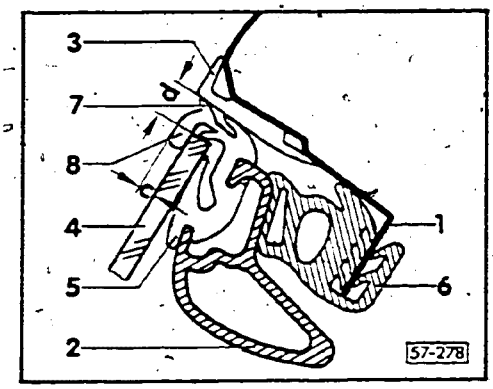

▶ **Fig. 19 Door component carrier dimensions**

- left door cross section shown

■ the outer sealing lip **7** must make contact along the contour of the pillar and roof trim moulding **3**

■ the outer window sealing lip **8** must not project outwards above the roof trim moulding **3**

c = 3.5 + 1 mm (9/64 + 3/64 in)
d = 8.1 + 1 mm (5/16 + 3/64 in)

1 — sealing flange
2 — door frame
3 — roof trim moulding
4 — window
5 — window seal
6 — inner door seal
7 — sealing lip
8 — sealing lip on window

cardiagn.com

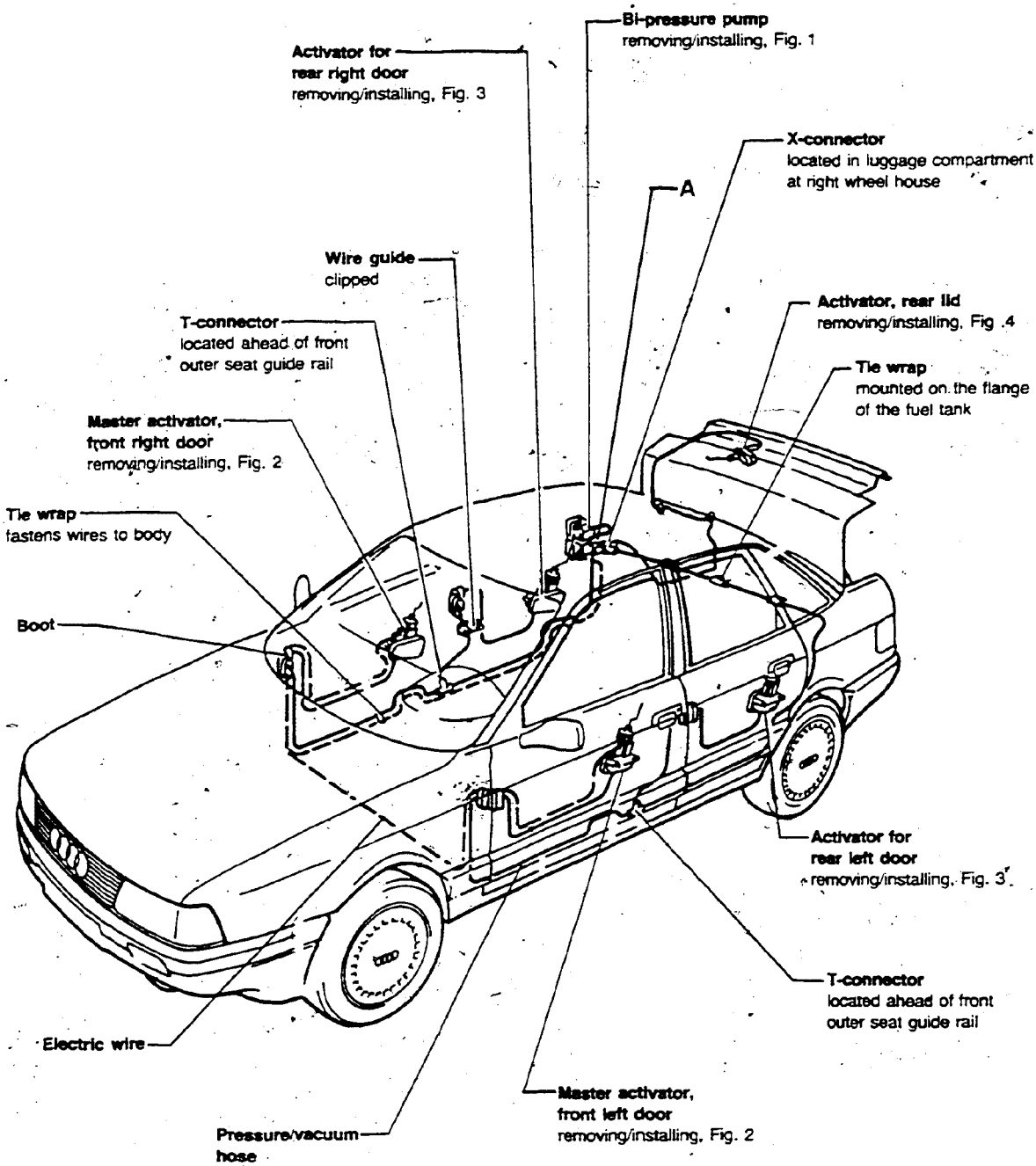

cardiagn.com

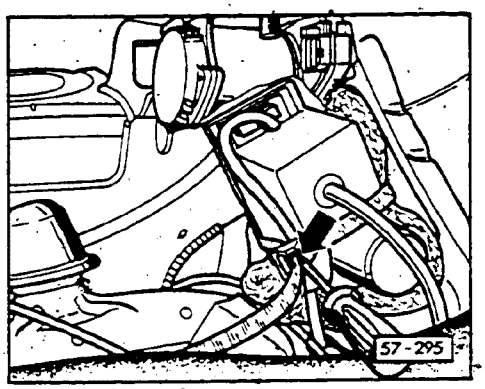

▶ **Fig. 1 Bi-pressure pump removing/installing**

- unscrew bolt for luggage compartment trim right
- press trim downward
- open retaining strap (**arrow**) by pressing the retaining tab back with screwdriver
- pull out connector wires

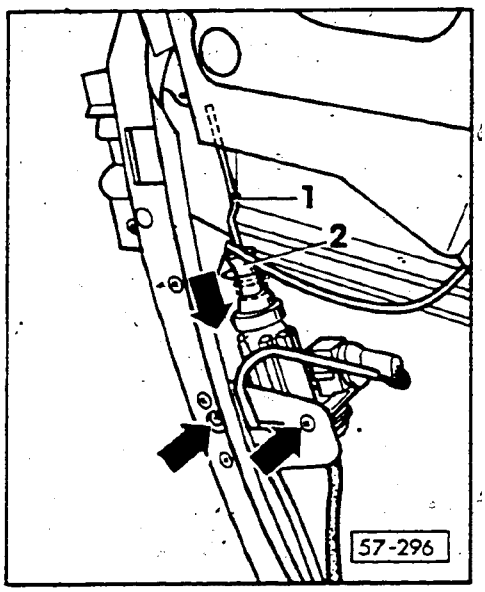

▶ **Fig. 2 Master activator, removing/installing**

Removing

- remove door trim (see Repair Group 70)

Operating rod **1** and master activator must be in **door open** position to loosen the locking ring.

- push locking ring **2** downward while holding operating rod **1**
- pull operating rod out of activator
- remove pressure/vacuum hose and unscrew mounting bolts
- remove multi-terminal connector

Installing

Install in reverse order, note the following:

- put operating rod **1**, lock and master activator in **door open** position
- press operating rod **1** in while pushing the locking ring **2** upwards

cardiagn.com

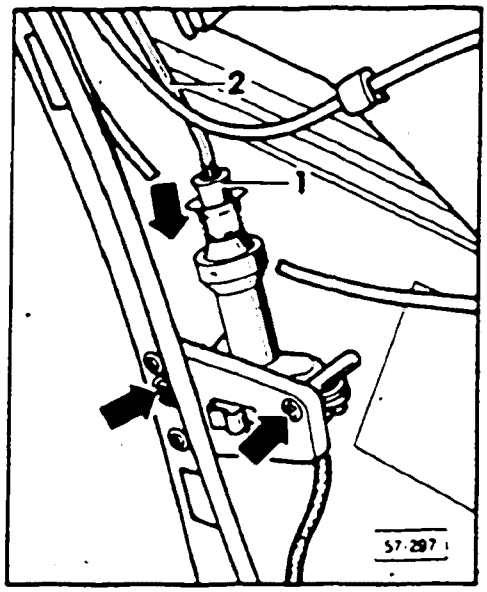

▶ Fig. 3 **Activator for rear doors, removing/installing**

Removing

- remove door trim (see Repair Group 70)

Note

Operating rod **2** and activator must be in **door open** position to loosen the lock ring.

- push locking ring **1** downward, while holding operating rod **2** securely
- pull operating rod out of activator
- remove pressure/vacuum hose and mounting bolts

Installing

Install in reverse order, note the following:

- put operating rod **2**, lock and activator in **door open** position
- push the operating rod **2** in while pulling the locking ring **1** upwards

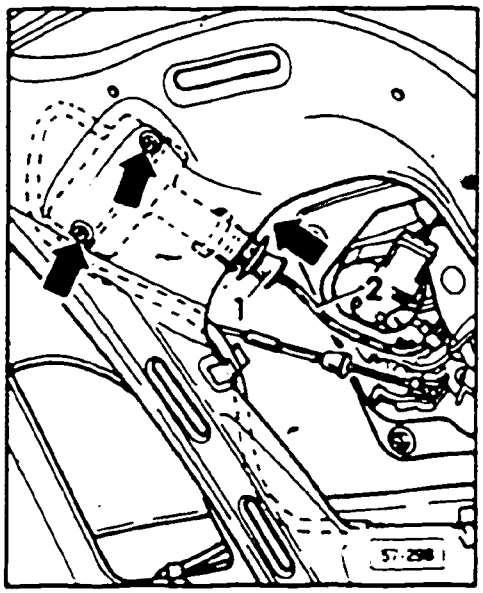

▶ Fig. 4 **Activator for rear lid, removing/installing**

Removing

- remove trim for right rear taillamp

Note

Activator must be in **door open** position, in order to loosen the locking ring.

- push locking ring **1** downward, while holding operating rod **2** securely
- pull operating rod out of activator
- unscrew mounting bolts and remove pressure/vacuum hose

Installing

Install in reverse order, noting the following:

- pressure/vacuum hose must be **between** lock operating rod, and inner part of hatch
- to assemble operating rod **2**, both lock and activator must be in open position
- push operating rod **2** while pulling lock pin **1** upwards

cardiagn.com

Fuel tank flap activator, removing/ installing

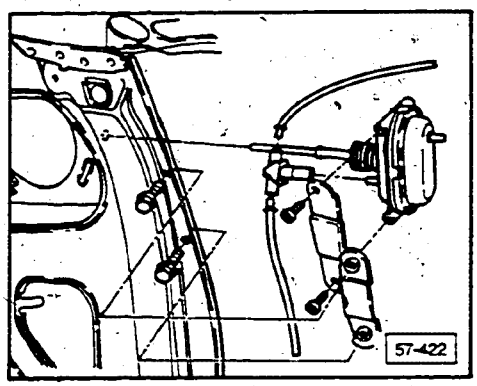

Removing

- open trunk
- pull back luggage compartment trim from around fuel filler neck
- remove hex screws, disconnect pressure/ vacuum hose from activator
- remove activator toward rear

Installing

Reinstall in reverse order noting the following:
- torque hex screws 4.0 Nm (35 in lb)

cardiagn.com

Central locking system, troubleshooting

Electrical

Refer to appropriate wiring diagram.

Test conditions

- fuse 19 **OK**
- battery **OK**

- open rear lid
  - bi-pressure pump located on right side of luggage compartment
- pull insulating material away from pump
- pull off plug connector from pump

Tools required

Use multimeter **US 1119** for all testing.

Note

As you look at the end of the plug connector, the cavities are numbered **one** through **seven** starting from the left. Cavities **five** and **seven** are **blank.**

Bi-pressure pumps are supplied by different vendors. Disregard pin positions in pumps.

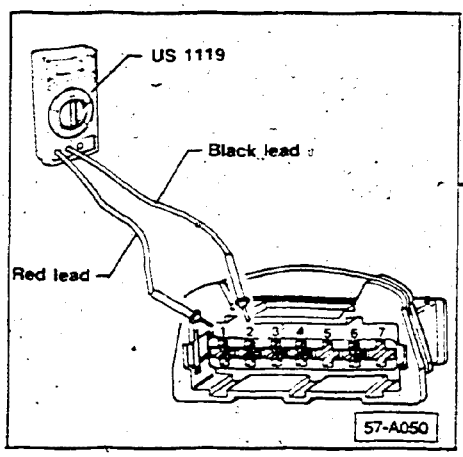

Check current supply to bi-pressure pump

- connect red lead of **US 1119** to cavity **1** of plug connector
- connect black lead of **US 1119** to cavity **2** of plug connector

US 1119 registers approx. 12.0 Volts	**US 1119 does not** register 12.0 Volts

→ check electrical wiring for break in continuity → End

→ Go to (B) page 57.19

cardiagn.com

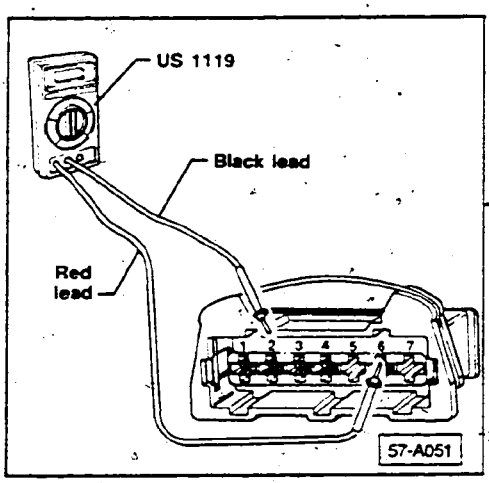

(B)

Check current supply from ignition lock to bi-pressure pump

- insert key into ignition starter lock **do not turn key**
- connect red lead of **US 1119** to cavity **6** of plug connector
- connect black lead of **US 1119** to cavity **2**

US 1119 registers approximately 12.0 Volts	**US 1119 does not** register 12.0 Volts

Check electrical wiring for break in continuity or replace ignition starter lock

End

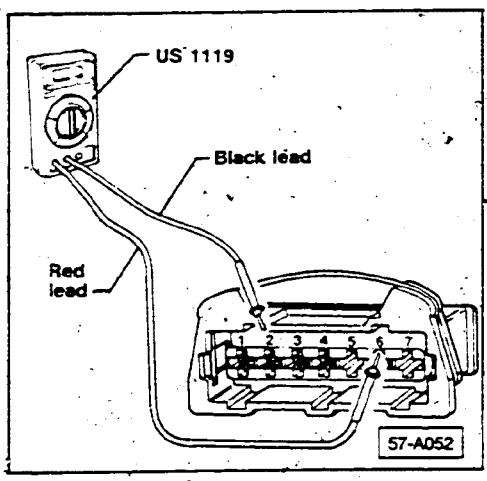

Check ignition starter lock

- remove ignition key
- connect red lead of **US 1119** to cavity **6** of plug connector
- connect black lead of **US 1119** to cavity **2** of plug connector

US 1119 registers 0.0 Volts	**US 1119** registers **more than** register 0.0 Volts

Replace ignition starter lock

End

Go to (C) on page 57.20

cardiagn.com

Ⓒ

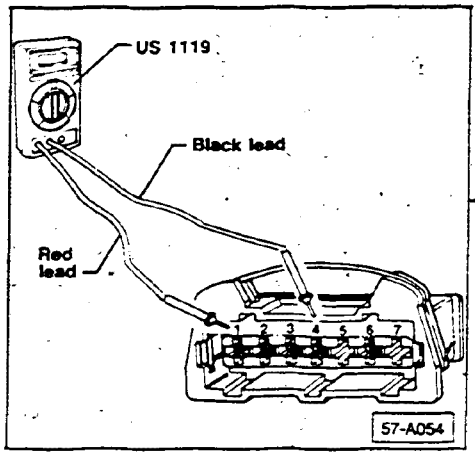

Check driver's door master activator switch **to lock door**

- connect red lead of **US 1119** to cavity **1** of plug connector
- connect black lead of **US 1119** to cavity **4** of plug connector
- push down driver's door locking button (**locked position**)

US 1119 registers approximately 12.0 Volts	**US 1110 does not** register 12.0 Volts

Check electical wiring for break in continuity or replace driver's door master activator switch

End

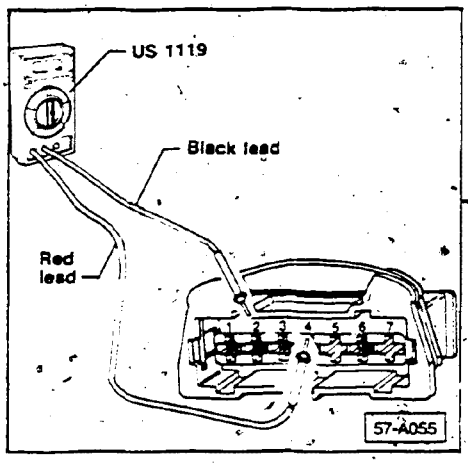

Check driver's door master activator switch **to open door**

- connect red lead of **US 1119** to cavity **4** of plug connector
- connect black lead of **US 1119** to cavity **2** of plug connector
- pull up driver's door locking button (**open position**)

US 1119 registers approximately 12.0 Volts	**US 1119 does not** register 12.0 Volts

Check electrical wiring for break in continuity or replace driver's door master activator switch

End

Go to Ⓓ on page 57.21

cardiagn.com

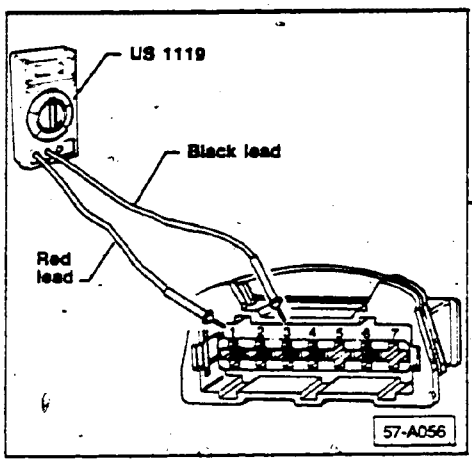

Ⓓ

Check right front door master activator switch to lock door

- connect red lead of **US 1119** to cavity **1** of plug connector
- connect black lead of **US 1119** to cavity **3** of plug connector
- push down right front door locking bottom (**locked position**)

US 1119 registers approximately 12.0 Volts	**US 1119 does not** register 12.0 Volts

Check electrical wiring for break in continuity or replace right front door master activator switch

End

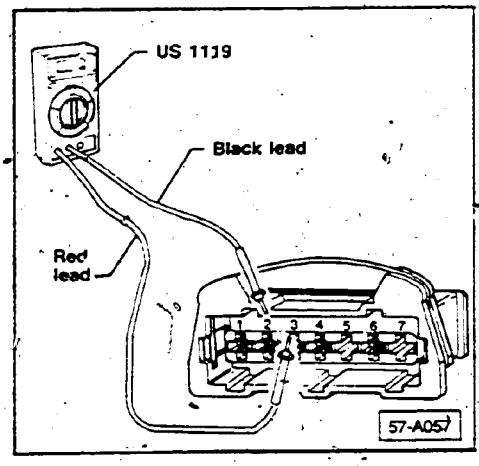

Check right front door master activator switch to open door

- connect red lead of **US 1119** to cavity **3** of plug connector
- connect black lead of **US 1119** to cavity **2** of plug connector
- pull up right front door locking button (**open position**)

US 1119 registers approximately 12.0 Volts	**US 1119 does not** register 12.0 Volts

Replace defective bi-pressure pump

End

Check electrical wiring for break in continuity or replace right front door master activator switch

End

cardiagn.com

Troubleshooting — bi-pressure system

Test condition

- electrical system **OK**

Note

If central locking system has not been activated for an extended period, key must be turned in lock several times to activate system.

When properly functioning, all locks must close within three to seven seconds.

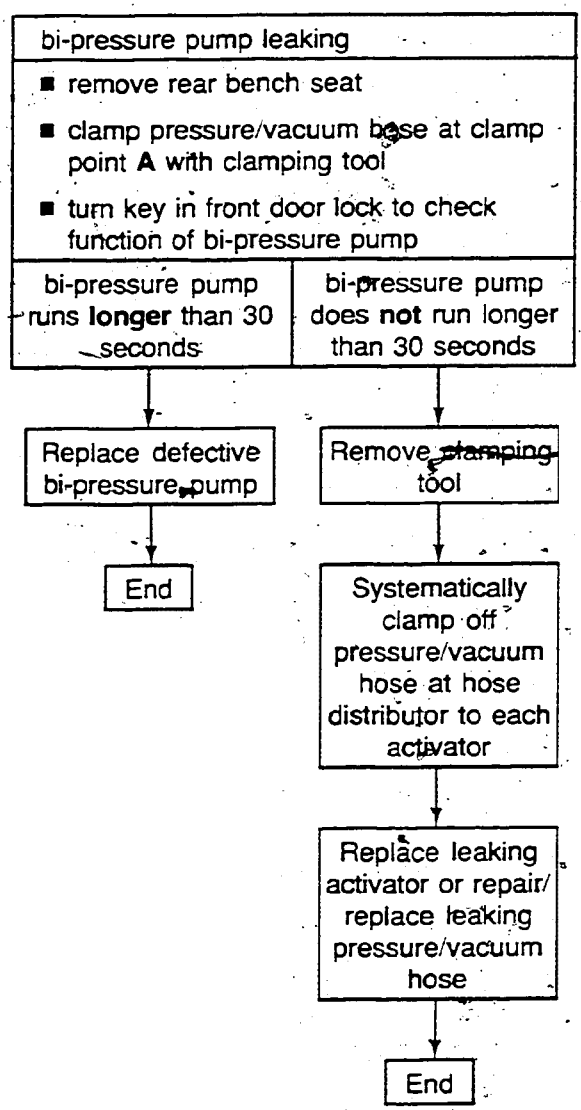

cardiagn.com

CONTINUED IN THE

BEGINNING OF NEXT ROW

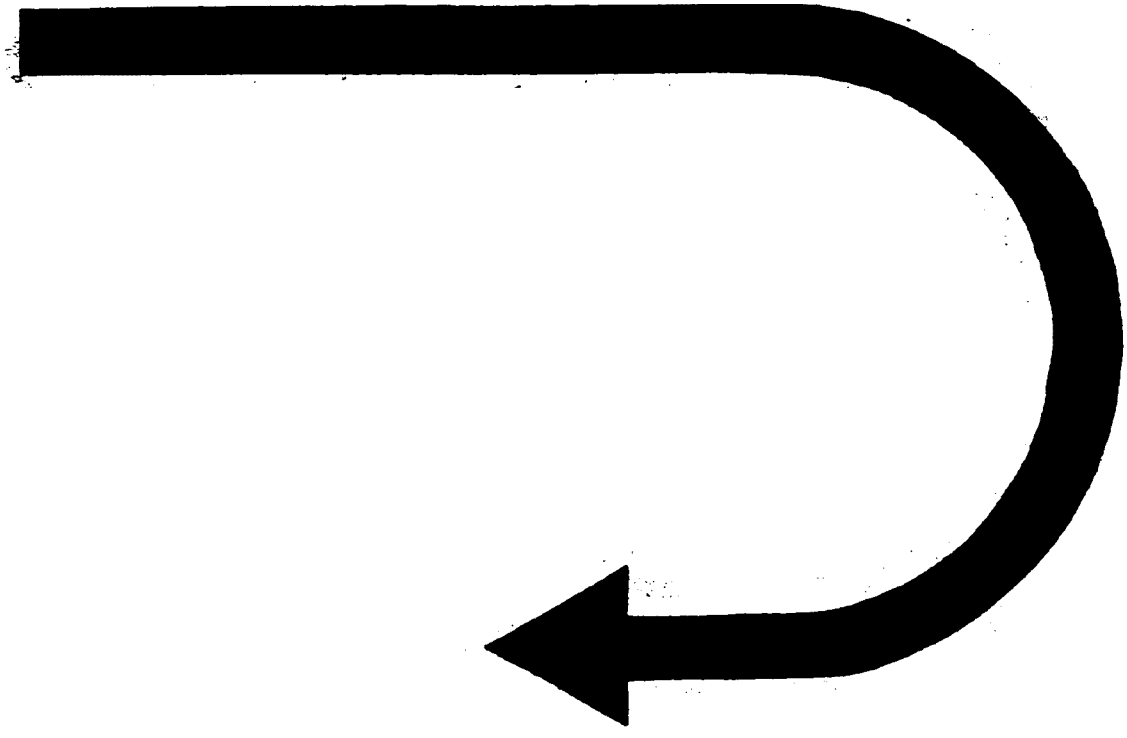

cardiagn.com

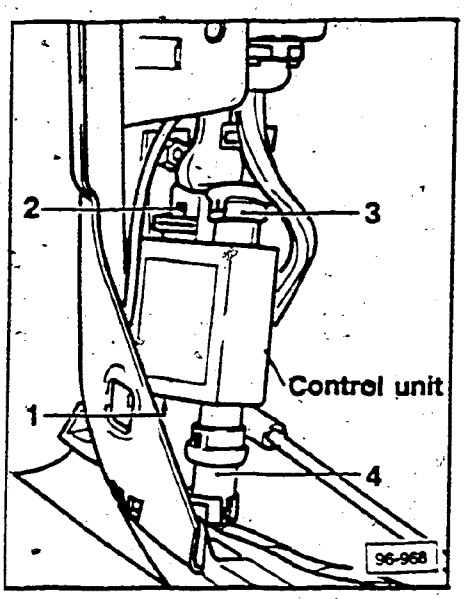

Heated lock cylinders, troubleshooting

Electrical

Note

Refer to appropriate wiring diagram.

1. test button
2. connector for microswitch
3. connector for heating element
4. connector voltage supply line

Test conditions

- battery **OK**
- fuse **19 OK**

Tools required

- multimeter **US 1119**

Checking voltage at cavities **30** (+), **31** (−)	
■ pull off plug connector **4** to control unit ■ set **US 1119** to voltage scale ■ connect tester **US 1119** to cavities **30** (+), **31** (−) of plug connector **4** ■ measure voltage • 12.0V	
NOT OK	**OK**

NOT OK → ■ repair break in electrical wiring → End

OK → Go to Ⓐ page 57.24

cardiagn.com

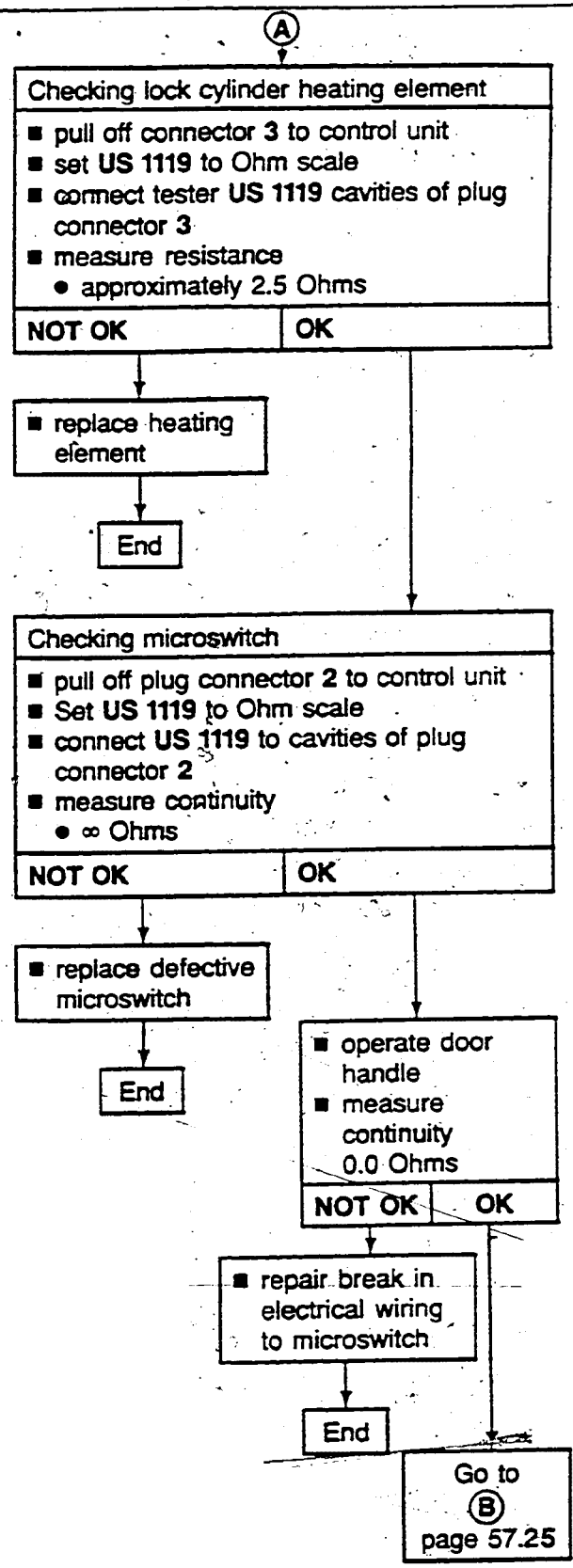

cardiagn.com

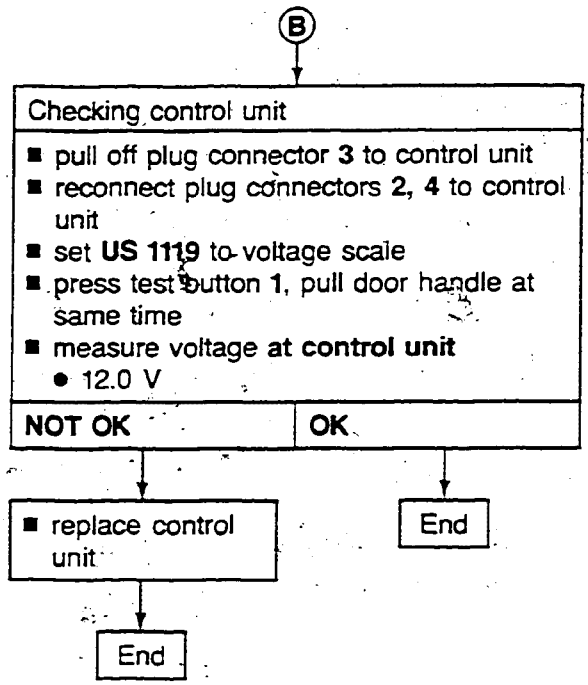

cardiagn.com

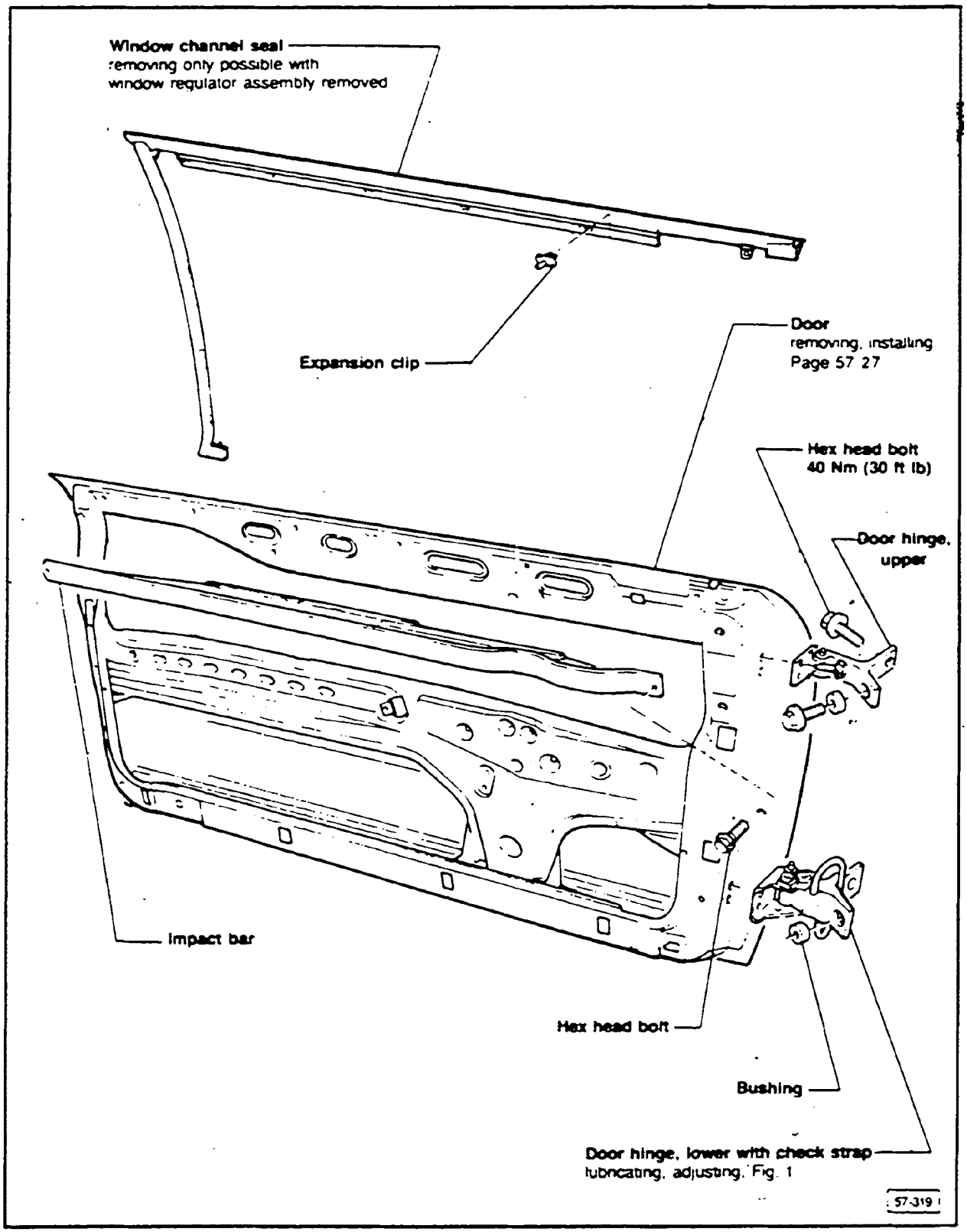

cardiagn.com

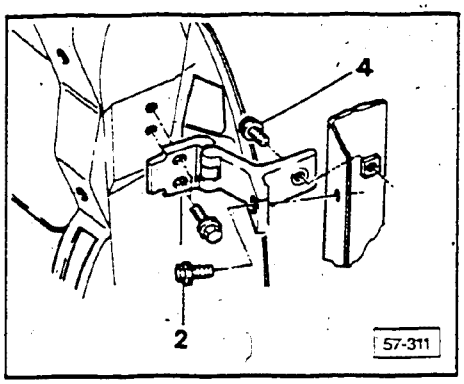

Front door, removing

- remove door trim panel, see Repair Group 70
- disconnect electrical wiring to power window regulator, door locks and mirror
- remove hex head bolts **2,4** from upper hinge with angle wrench **US 2598** or equivalent

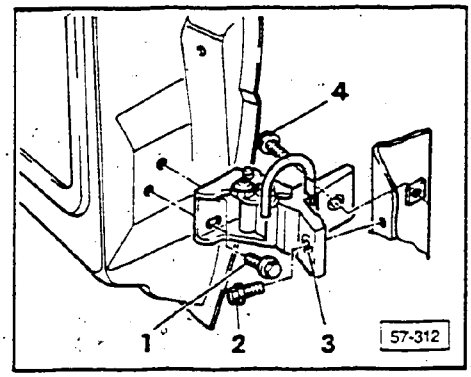

- remove hex head bolts **2,4** from lower hinge with angled wrench **US 2598** or equivalent

Front door, installing

Reinstall all components in reverse order of removal, noting the following:

- align and adjust door, see page 57.33
- check and adjust the window regulator as required
- reconnect all electrical connectors
- check all power window, mirrors and door locks for proper function

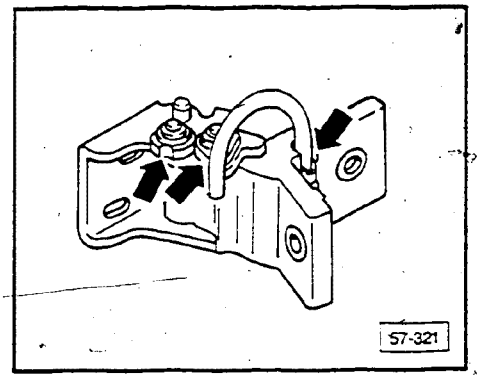

Fig. 1. Lower door hinge, lubrication

- apply lubricant **AOS 126 000 05** or equivalent to points shown (**arrows**)

Front door, replacing

Note

From VIN 8B MA 008 401, the door shell has been changed. Only the new style door will be available as a replacement part. When installing a new style door to an older vehicle, the following parts must also be installed/replaced:

1 – door trim panel, see Repair Group 70
2 – window regulator
3 – outside door seal
4 – flat nut/washer, page 57.28, callout 16
5 – mounting trim cover, Fig. 2
6 – outside mirror mount base, Fig. 3

cardiagn.com

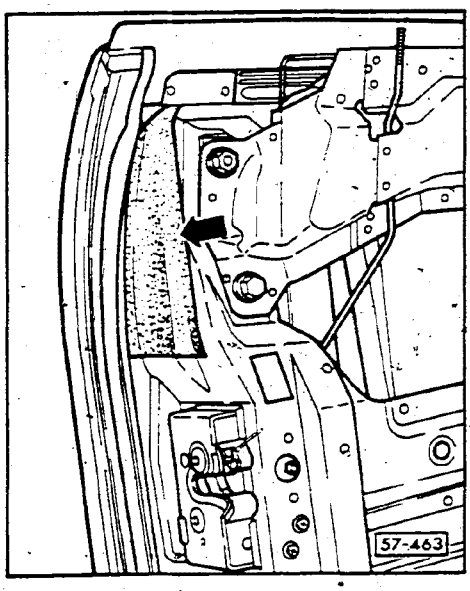

▶ Fig. 2 **Mounting trim cover, installing**

Note

Door surface must be free of dirt or grease for good seal. Install wrinkle free.

- glue cover (**arrow**) to door shell as shown

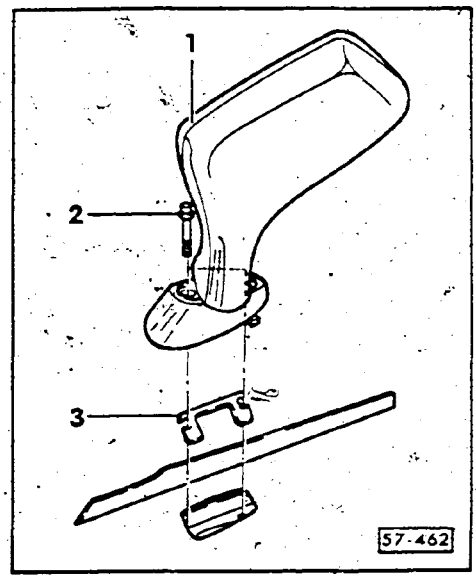

▶ Fig. 3 **Outside mirror mount base, installing**

Note

Only install mirror base **3** if old outside mirror assembly is being reused.

- glue mirror base **3** to mirror bracket
- install mirror assembly **1** with bolts **2**
  - 4 Nm (35 in. lb)

cardiagn.com

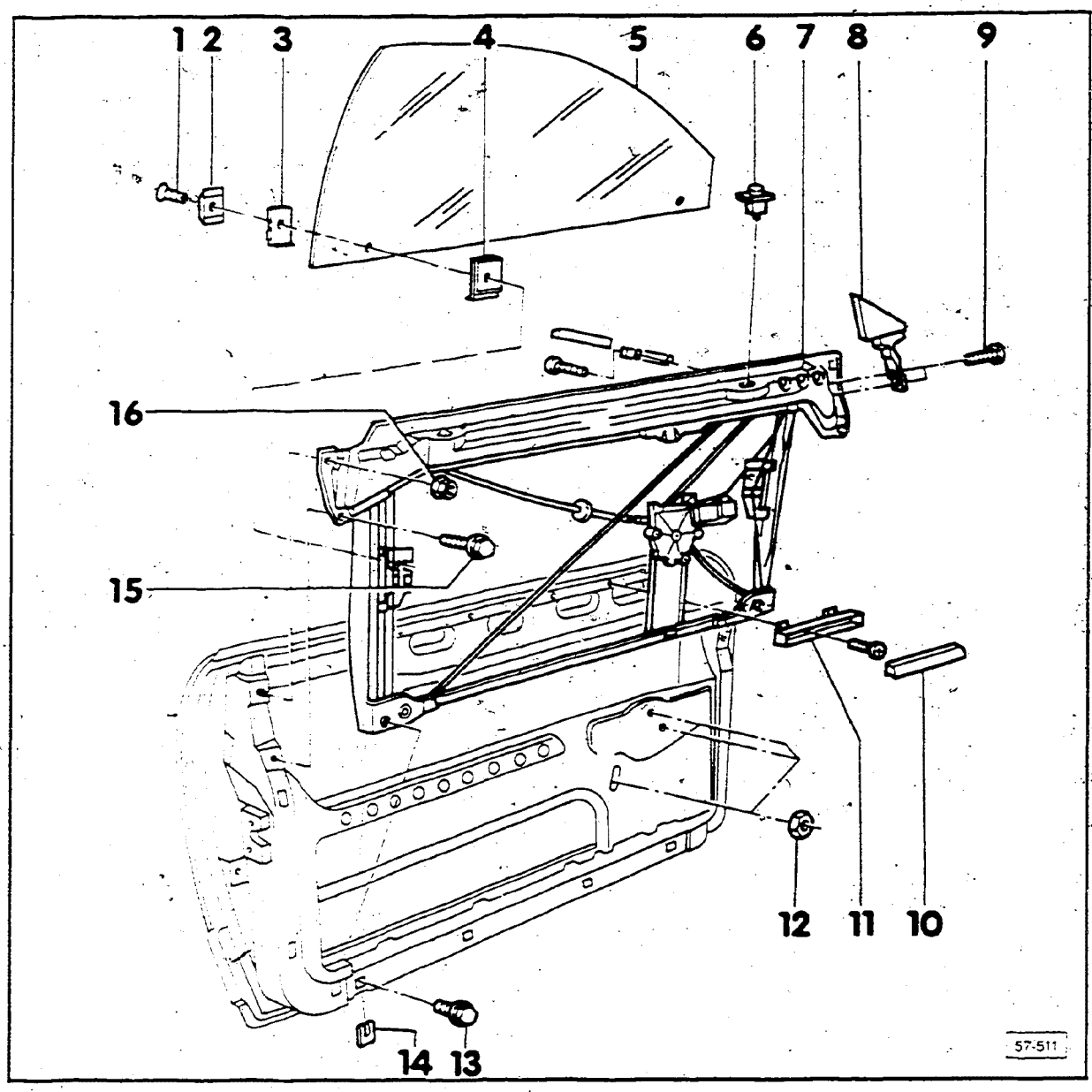

1 – **Torx screw – 20 Nm (15 ft lb)**

2 – **Aluminum clamping piece**

3 – **Fastener, outside**

4 – **Fastener, inside**

5 – **Door glass**
removing/installing, page 57.31

6 – **Adjusting clip**
for height adjustment, see Repair Group 70

7 – **Window regulator**
- removing/installing, page 57.29
- adjusting, page 57.32

8 – **Cover plate**
adjusting, 57.32

9 – **Torx screw – 20 Nm (15 ft lb)**

10 – **Buffer**

11 – **Bracket**

12 – **Nut – 6 Nm (53 in. lb)**

13 – **Bolt – 15 Nm (11 ft lb)**

14 – **Adjustment shim**
install as required

15 – **Bolt – 15 Nm (11 ft lb)**

16 – **Flat nut/washer – 15 Nm (11 ft lb)**

cardiagn.com

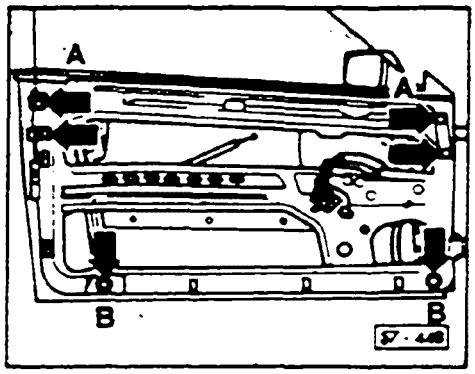

Window regulator, removing

- remove door trim panel, see Repair Group 70
- mark location of four upper window regulator bolts (**arrows A**)
- unbolt window regulator motor

Note

Location of spacers must be marked prior to removal of window regulator assembly. Spacers must be reinstalled at same location.

- loosen lower window regulator bolts (**arrows B**)
- remove spacers
- remove all six window regulator bolts
- remove window regulator from door

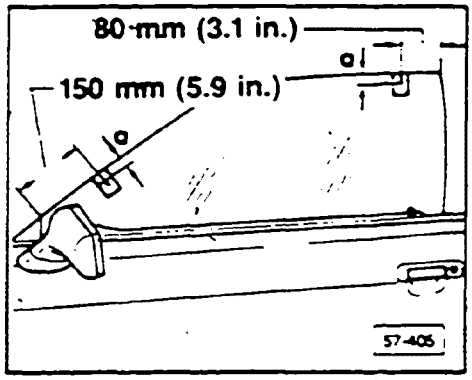

Window regulator, installing

- glue adhesive strips, as shown, to glass
  - mark dimension **a** = 20 mm (25/32 in.) with pencil
- reinstall window regulator into door shell
- insert lock rod with lock button
- install all window regulator bolts, and hand tighten
  - note position of upper bolts as marked

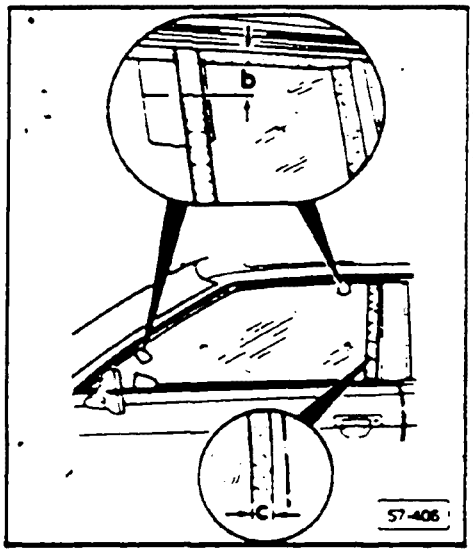

- close door, check dimensions:
  b = 19.5-21.00 mm (49/64-53/64 in.)
  c = 12.0-15.0 mm (15/32-19/32 in.)
  - 15.0 mm is standard

  If **not**: move window regulator in door shell until dimensions are attained.

Note

If window regulator cannot be positioned with the aid of oversized holes, the glass must be pushed into corners, see installing glass, page 57.31

- insert spacers under bolts
- close door, check tension of glass to body
  - door must close easily

CAUTION

Uneven pressure of glass in area of B-pillar or not achieving dimensions **b** or **c** will cause wind noises and leaks.

cardiagn.com

- open door
- rub B-pillar edge of glass with chalk
- close and reopen door
- check impression left by chalk on door seal
  - if impression is full length of seal, door glass is properly adjusted

    If not, add or remove spacers, as required, and recheck

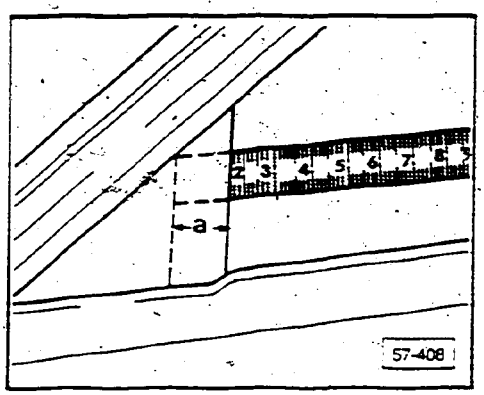

- close door, window
- insert steel ruler from outside as shown
  - **a** = 17-18 mm (43/64-45/64 in.)

Cover plate can be adjusted to achieve dimension **a**

- reinstall door trim panel, see Repair Group 70
- check vehicle for wind noise and leaks

cardiagn.com

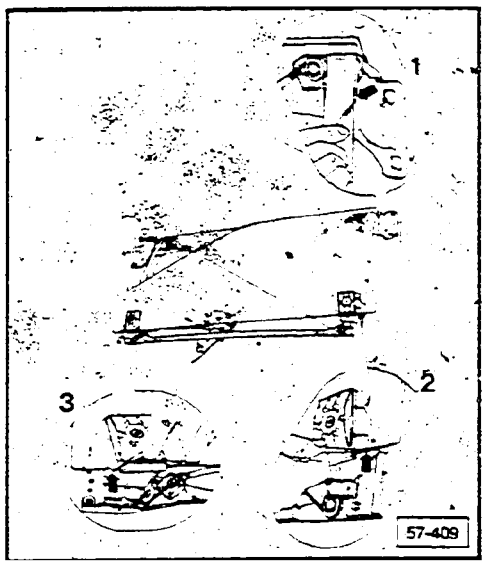

Door glass, removing

- fully lower window glass
- mark position of glass to frame and carrier as shown (**insets**)

1 — B-pillar, upper
2 — B-pillar, position on carrier
3 — A-pillar, position on carrier

- raise window halfway
- loosen torx bolts on carrier
- remove aluminum clamping pieces with gaskets
- remove door glass

Door glass, installing

Note

On vehicles up to **VIN 8BKA 008300** **black** plastic base must be replaced with **white** plastic base.

- position plastic base
- position glass and align to marks on frame and carrier

If original glass was missing (broken) initially place glass between threaded holes.

- carefully press glass onto carrier, front and rear
- install plastic base
- install aluminum clamping pieces
- hand tighten torx head screws
- align rear carrier (B-pillar side) parallel to guide rail
- press downward with wrench (**arrow**) until spring in cable is completely compressed
- fully tighten torx bolts
  - 20 Nm (15 ft lb)

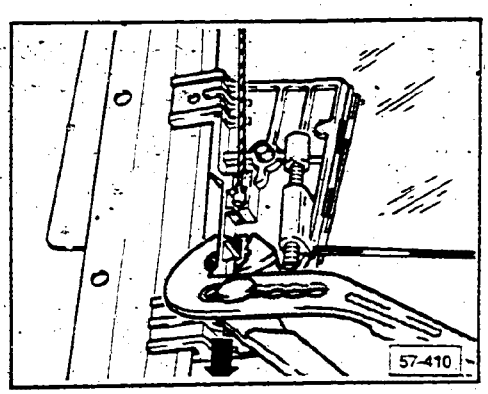

cardiagn.com

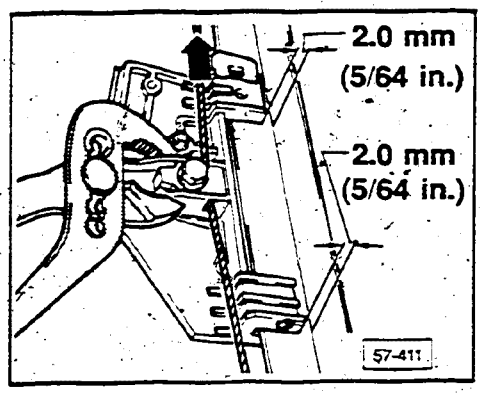

- align front carrier (A-pillar side) parallel to guide rail
- adjust gap between carrier and rail to 2.0 mm (5/64 in.), and push carrier upwards

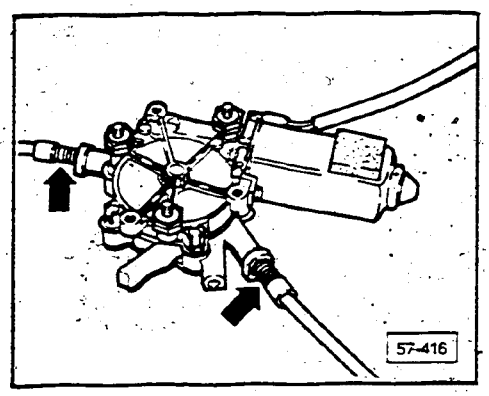

- second spring in cable (**arrows**) must be completely compressed
  - maximum play 4.0 mm (5/32 in.)

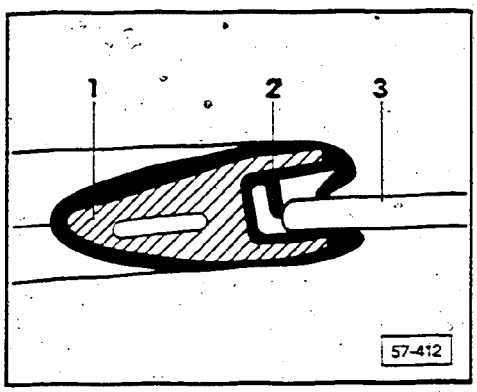

- tighten torx screw
  - 20 Nm (15 ft lb)
- raise glass fully
- front edge of glass **3** must touch the inner sealing lip **2** of cover plate **1**
  If **Not:** move glass forward
  1.0 mm (3/64 in.), realign carrier

Note

Cover plate must be replaced if glass still cannot be made to contact sealing lip **2**.

- install and adjust window regulator

Cover plate, adjusting

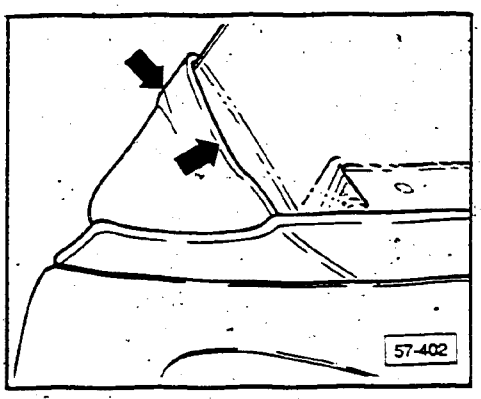

- fully raise door glass
- upper edge of glass and cover trim must form one line
- outside of glass must not cause buckling
- rubber must have smooth contact with glass (**arrows**)

Note

Elongated holes allow for range of adjustment of cover plate.

- check and adjust, see Page 57.30

cardiagn.com

Doors, adjusting

- adjust door gap by moving doors with hinges, Fig. 1
- align door height (contour of body) Adjust at hinges (extra-large holes in hinge at the point where hinge fastens to A-pillar, Fig. 2
- to prevent wind noises, adjust at door mounting hinges or in rear of doors at striker plate, Figs. 3, 4
- adjusting window regulator assembly, Fig. 5

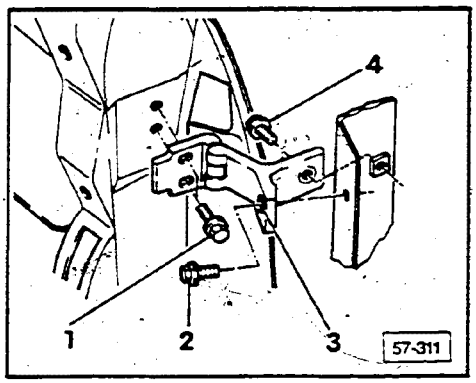

▶ **Fig. 1 Door gap, adjusting**

- loosen bolts **2, 4** with angle wrench **US 2598** or equivalent
- unscrew threaded bushing on bolts **2** away from A-pillar
- close door, move door to adjust gap

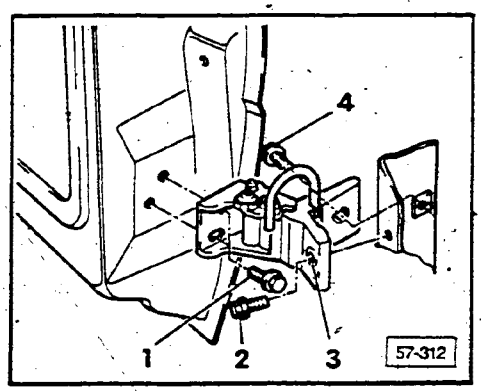

▶

- screw in threaded bushing **3** until it makes contact with A-pillar
- screw in bolts and tighten to 30 Nm (22 ft lb)
- recheck gap

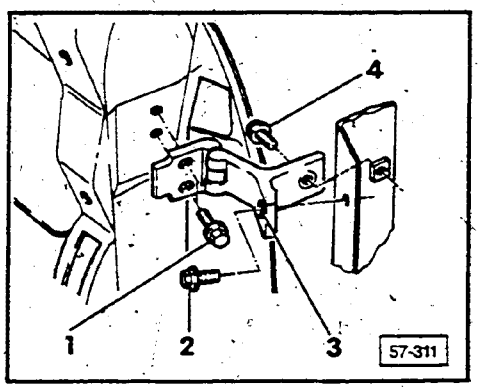

▶ **Fig. 2 Height adjustment**

- loosen bolts **2, 4** with angled wrench **US 2598** or equivalent
- unscrew threaded bushing on bolts **2** away from A-Pillar
- close door
- move door with hinge
- tighten bolts to 40 Nm (30 ft lb)

cardiagn.com

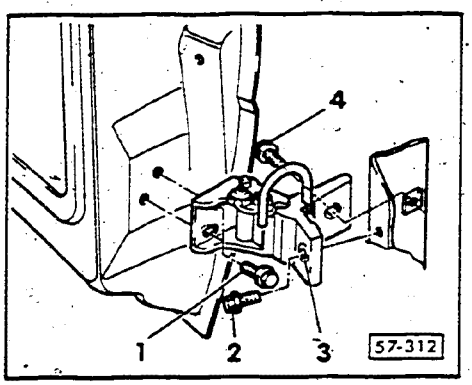

▶ **Fig. 3 Front of door wind noises, prevention**

- loosen bolts 1
- move door as required
- tighten bolts 30 Nm (22 ft lb)

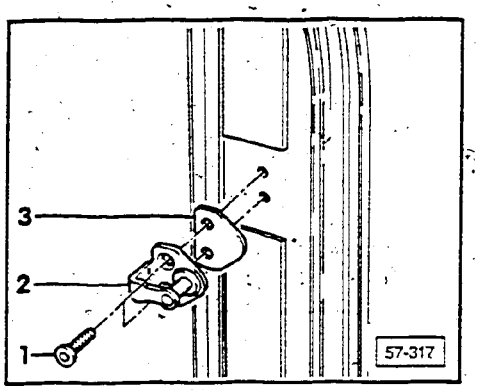

▶ **Fig. 4 Striker plate wind noises, prevention**

- adjust the striker pins at the rear of door
  - striker pin 16 Nm (12 ft lb)

1 — striker pin
2 — striker plate
3 — base plate
  - more than one may be used to achieve proper adjustment

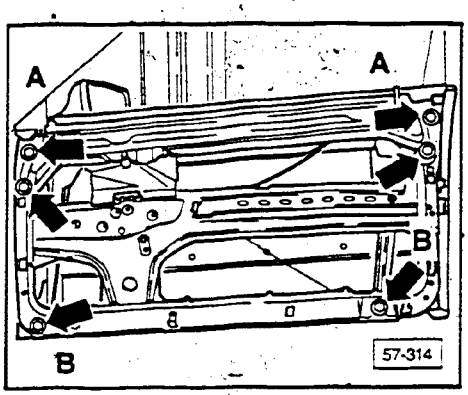

▶ **Fig. 5 Window regulator, adjusting**

Note

Window and door shell must be adjusted first.

- loosen bolts (**arrows**)
- close door

Two technicians will be required.

- press carrier tightly against roof and pillar
  - exert slightly more force than required. Rubber seal will return assembly to proper position
- have second technician (from inside vehicle) place spacers between door shell and window regulator
- install bolts from below and tighten
  - 15 Nm (11 ft lb)

cardiagn.com

THIS FRAME INTENTIONALLY LEFT

BLANK

cardiagn.com

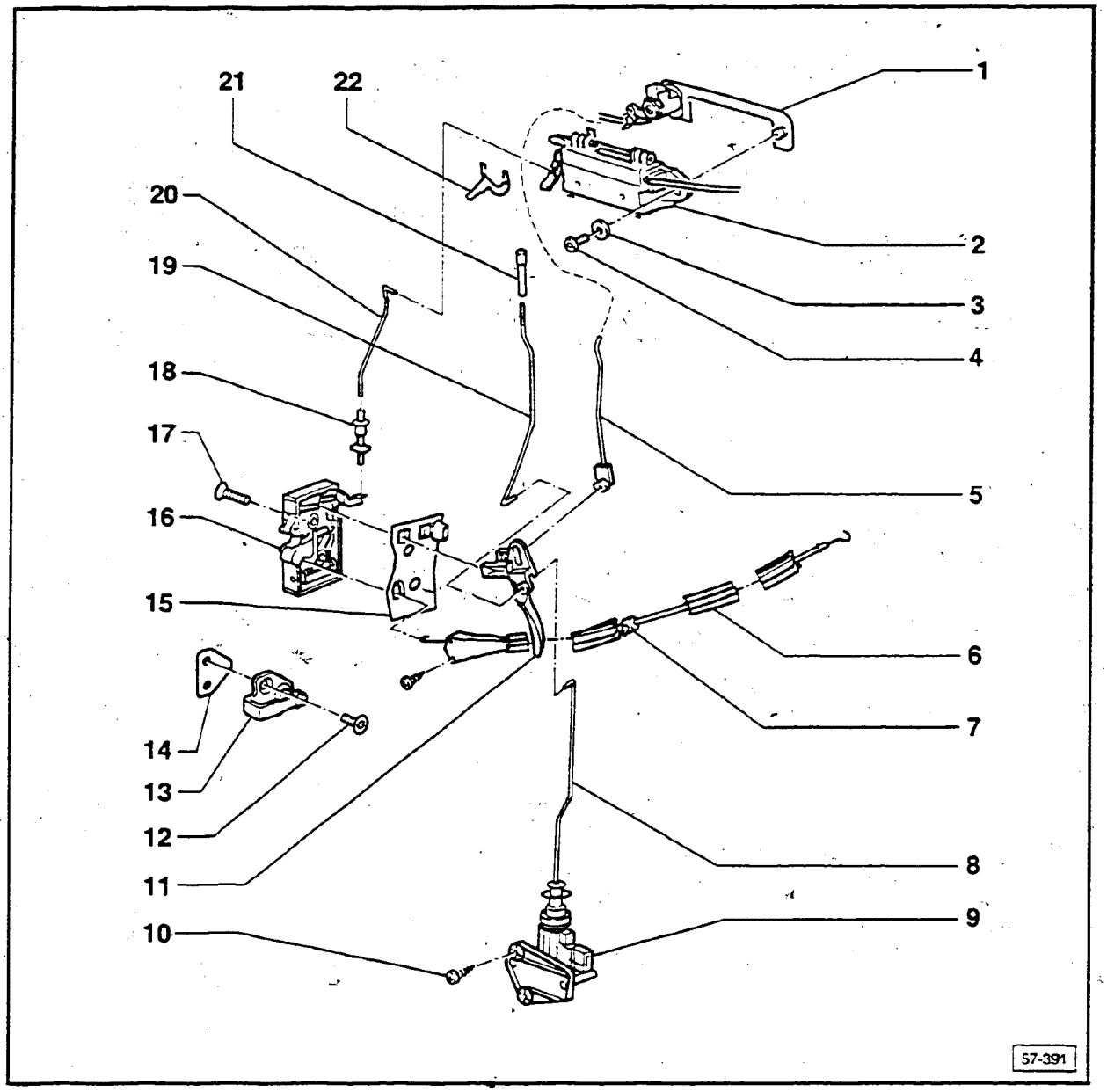

1 — **Outer lock plate**
removing lock cylinder, Fig. 1

2 — **Door handle**
adjusting lock operating rod, Fig. 3

3 — **Washer**

4 — **Torx head screw**
5 Nm (3.7 ft lb)

5 — **Lock rod — lock cylinder**
removing, move swivel bushing

6 — **Bowden cable**
for door inner opening mechanism

7 — **Clip**
note proper installation of pull rod in clip

8 — **Lock rod**
removing, Fig. 3

9 — **Door lock**
removing, Fig. 1

10 — **Phillips head screw**

11 — **Lock rod fastening plate**

12 — **Screw**
16 Nm (12 ft lb)

13 — **Striker**
adjusting, Page 57.34

cardiagn.com

14 — **Striker base plate**
more than one may be used

15 — **Seal**

16 — **Door lock**
removing, Fig. 1

17 — **Pan head tapping screw**
16 Nm (12 ft lb)

18 — **Clip for operating lever**
push sleeve downward to remove lock operating rod

19 — **Lock rod**
removing, unclip at lock

20 — **Lock operating lever rod**
assembly, Fig. 3

21 — **Locking knob**
removing, see Repair Group 70

22 — **Turn clip**
loosen/installing, Page 57.40

cardiagn.com

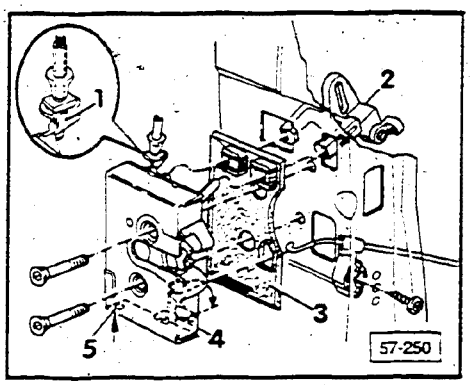

▶ **Fig. 1 Door lock, removing**

- remove front door trim panel, see Repair Group 70
- release operating rod clip and pull out operating rod
- unhook bowden cable
- pull out door lock from part **2**

Door lock, installing

Install all components in reverse order, noting the following:

- re-hook the bowden cable by pulling lever **4** in direction of **arrow**
- insert screwdriver into hole **5** to lock bowden cable into place
- torque all bolts to 16 Nm (12 ft lb)

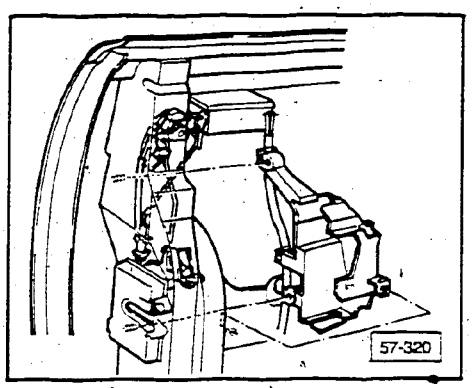

▶ **Fig. 2 Door lock covering, removing**

- unclip covering from door shell
- pry covering off with screwdriver from bolt

Door lock covering, installing

Install in reverse order of removal.

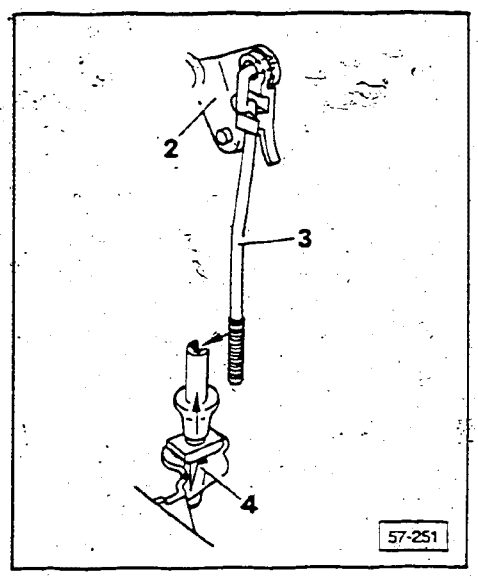

▶ **Fig. 3 Lock operating rod, removing**

- install bushing into lever **2**
- hook operating rod **3** into lever
- insert mounting clip **4** into door lock release lever
- check operating rod free play at clip **4**, without putting undue strain on the door lock release lever
  - 1.0 mm (3/64 in.) maximum free play

Lock operating rod, installing

Install all components in reverse order of removal, noting the following:

- to adjust, move sleeve upwards on operating clip **4**

cardiagn.com

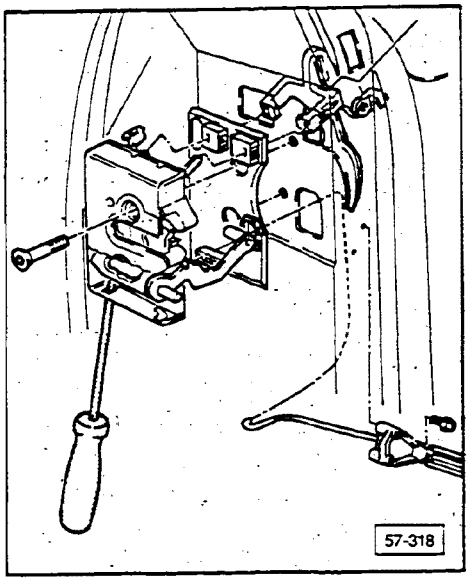

▶ Fig. 4 **Inner door lock bowden cable, removing**

- remove door trim panel, see Repair Group 70
- unclip bowden cable
- pull bowden cable and lock door lock with screwdriver, see Fig. 1
- unhook bowden cable

Inner door lock bowden cable, installing

- Install in reverse order of removing, noting how bowden cable is placed in clips.

cardiagn.com

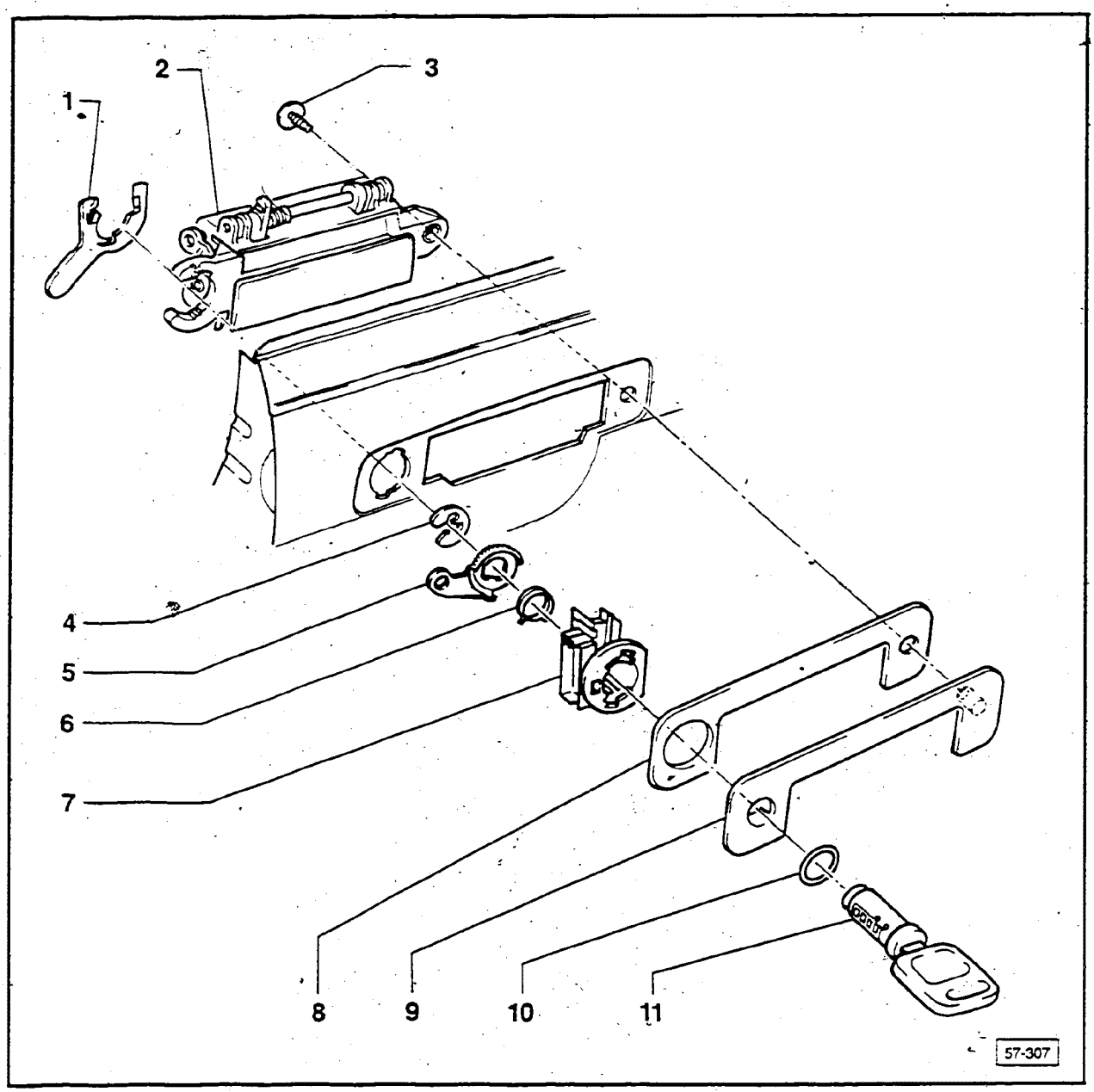

Note

Remove door trim panel before removing door handle.
Remove window regulator assembly.

1 — **Lock clip**
removing/installing, Fig. 1

2 — **Door handle**
align door handle to door lock

3 — **Torx head screw**
5 Nm (45 in. lb)

4 — **C-clip**

5 — **Operating lever**

6 — **Spring**
installed position, Fig. 2

7 — **Heated lock cylinder housing**

8 — **Plate**

9 — **Trim cover**
removing, Fig. 3

10 — **Sealing ring**

11 — **Lock cylinder**
remove only with key

cardiagn.com

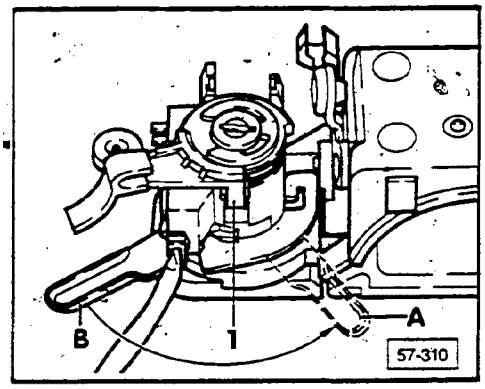

▶ Fig. 1 **Turn clip, installing**

A = lock clip tight in locked position
B = lock clip released
- indentation **1** in lock clip must line up

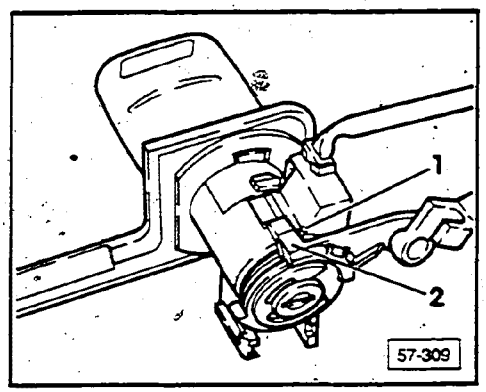

▶ Fig. 2 **Position spring, installing**

Note

When tensioned, the ends of the spring **1** must be positioned to left and right of operating lever **2**.

Pre-tensioning always pushes the operating lever and lock cylinder into center positon

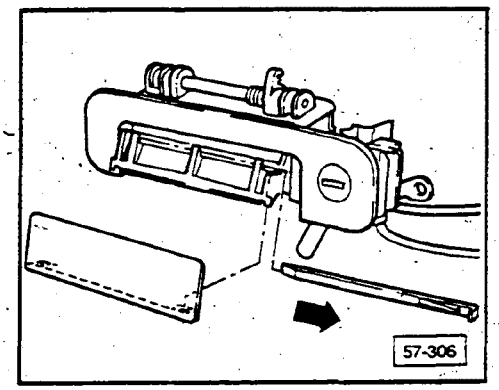

▶ Fig. 3 **Door handle trim cover, removing**

Note

Door handle trim **must** be removed before removing door handle to prevent damage to paint on handle trim.

- pull up door handle
- pull out locking pin in direction of **arrow**
- remove trim cover

cardiagn.com

Note

If central locking system has not been activated for an extended period, or bi-pressure pump has been replaced, key must be turned in lock to activate system.

When properly functioning, all locks must close after **two** seconds.

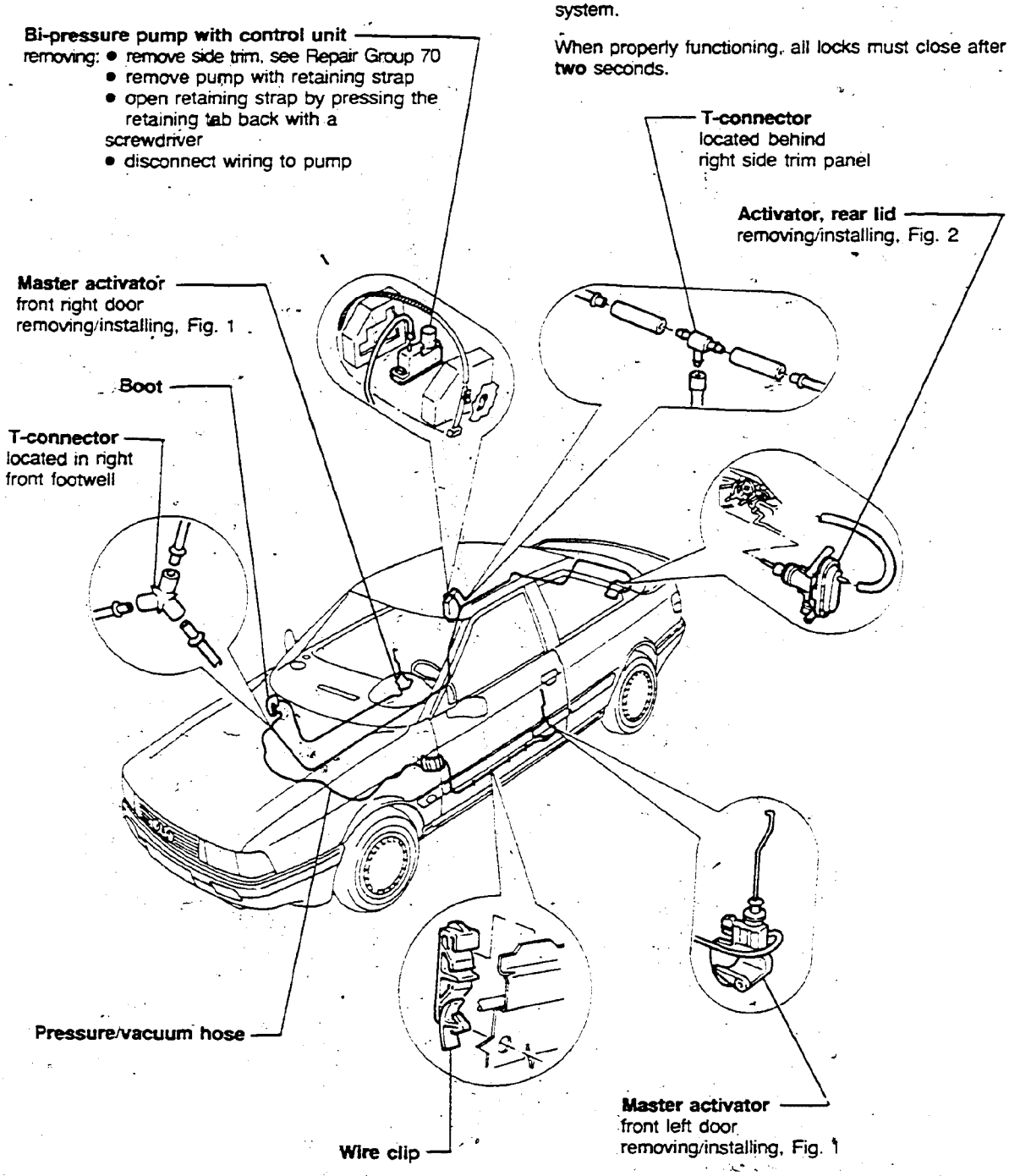

cardiagn.com

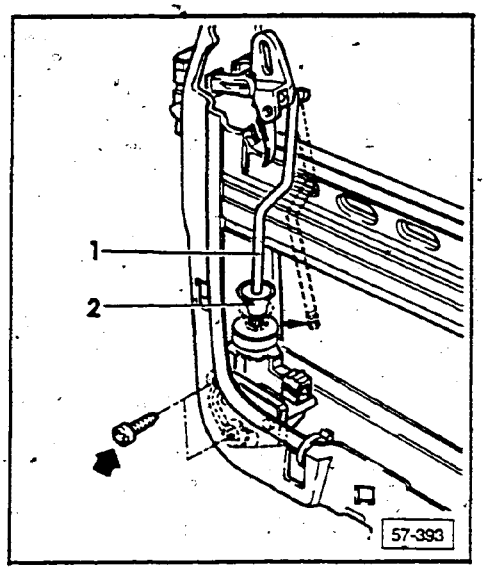

▶ Fig. 1 **Master activator, removing**

- remove door trim panel, see Repair Group 70

Operating rod **1** and master activator must be in **door open** position to loosen the locking ring.

push locking ring **2** downward while holding operating rod **1**

- pull operating rod out of activator (**arrow**)
- remove pressure/vacuum hose and unscrew mounting bolts (**arrow**)
- remove multi-terminal connector

Master activator, installing

Install all components in reverse order of removal, noting the following:

- put operating rod **1**, lock and master activator in **door open** position
- press operating rod **1** in while pushing the locking ring **2** upwards

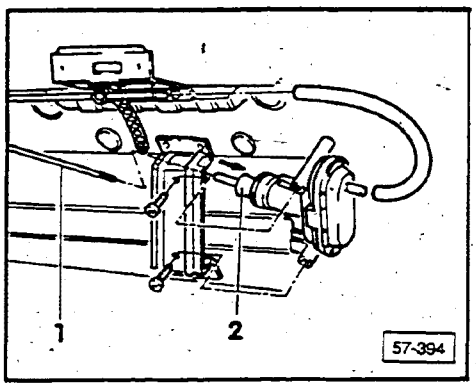

▶ Fig. 2 **Rear lid activator, removing**

- remove lid trim panel, see Repair Group 70

Operating rod must be in **door open** position to loosen the lock ring.

- push lock ring **2** in direction of arrow while holding operating rod securely
- pull operating rod out of activator
- remove pressure/vacuum hose and mounting bolts

Rear lid activator, installing

Install all components in reverse order of removal, noting the following:

- pressure/vacuum hose must be between rod, lock and lid trim panel
- to assemble operating rod **1**, lock and activator must be in **door open** position
- push in operating rod, lock ring upward
  - do not tension operating rod

cardiagn.com

Fuel tank flap activator, removing/installing

Removing

- open rear hatch, pull out rear shelf

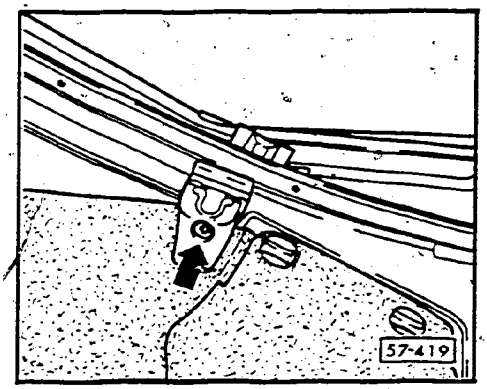

- remove screw (**arrow**), take off right rear buffer
- pull back trim from around fuel tank filler neck

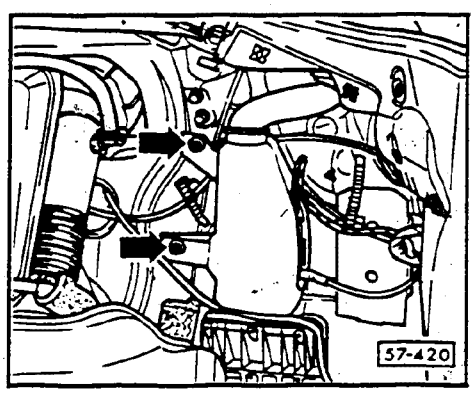

- remove screws (**arrows**), take out rear window washer fluid container toward rear

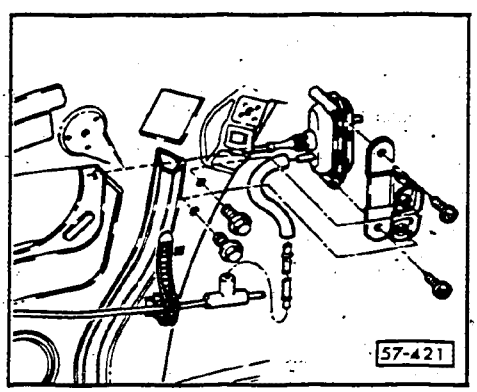

- remove activator mounting screws, pull out activator
- disconnect pressure/vacuum hose

Installing

Reinstall all components in reverse order, noting the following:

- torque fuel tank flap activator mounting screws 4.0 Nm (35 in. lb.)
- check central locking system for proper function

cardiagn.com

CONTINUED IN THE

BEGINNING OF NEXT ROW

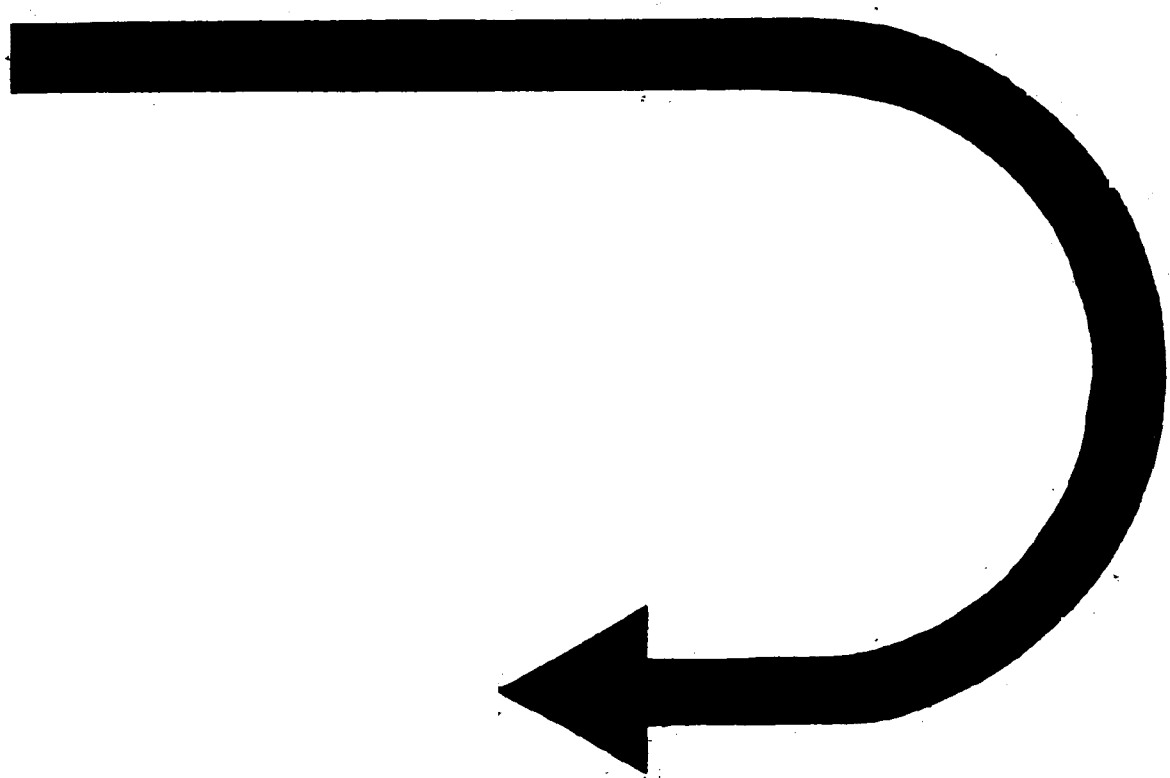

cardiagn.com

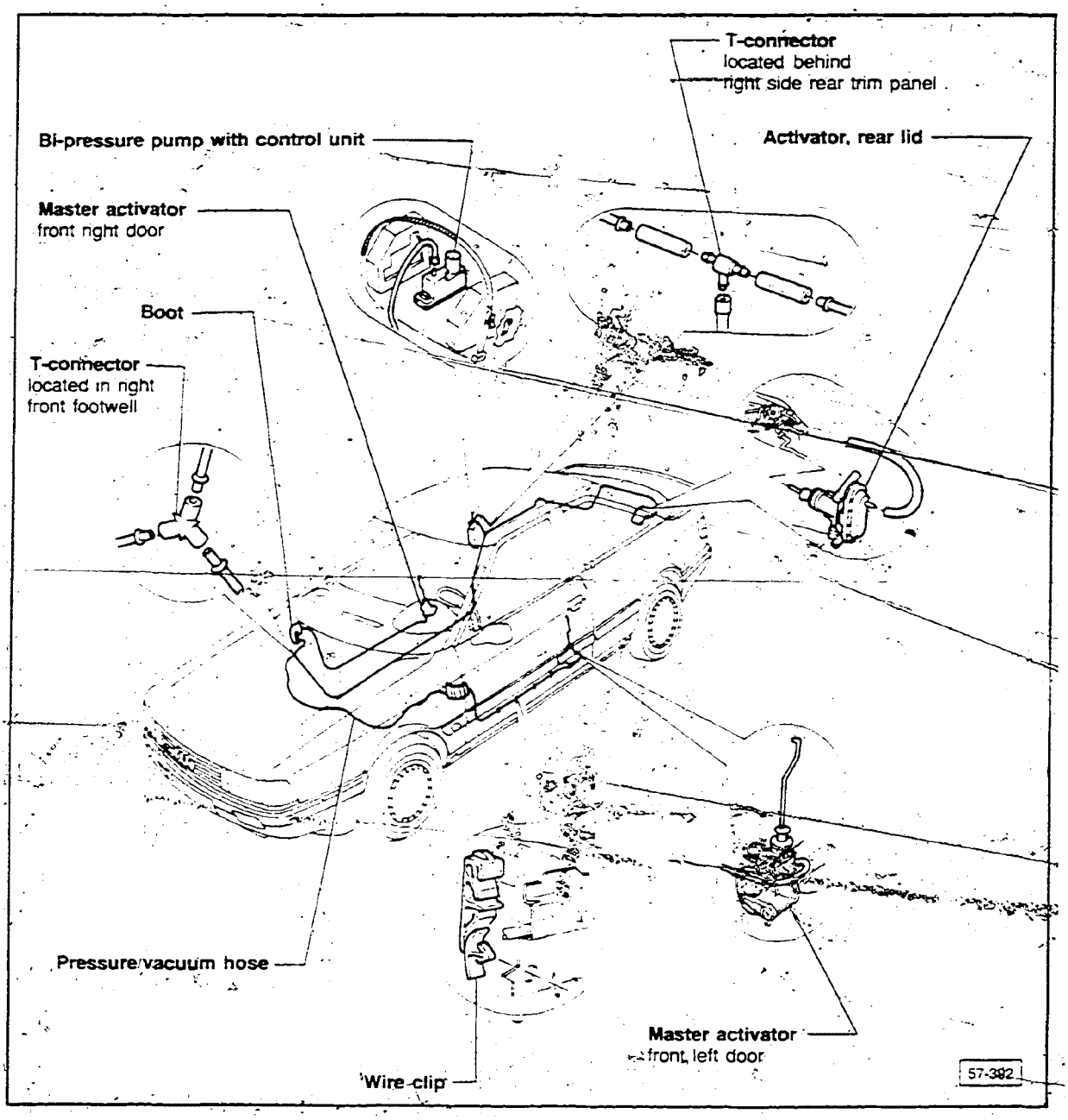

cardiagn.com

Central door locking, troubleshooting

Electrical

Refer to appropriate wiring diagram.

Test conditions

- fuse 19 **OK**
- battery **OK**

■ remove right rear side trim
- bi-pressure pump located on right side of luggage compartment

■ pull insulating material away from pump
■ open retaining strap by pressing the retaining tab back with a screwdriver
■ pull off plug connector from pump

Tools required

Use multimeter **US 1119** for all testing.

Note

As you look at the end of the plug connector, the cavities are numbered **one** through **seven** starting from the left. Cavities **five** and **seven** are **blank.**

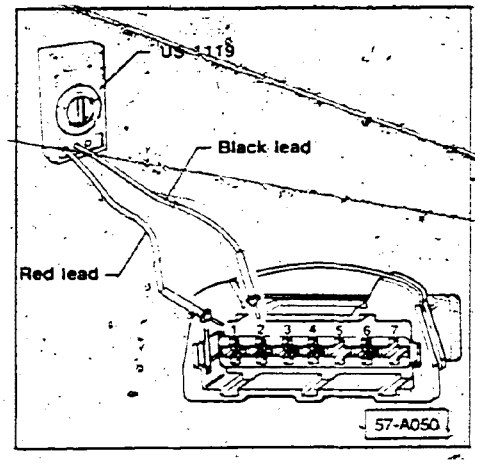

Check current supply to bi-pressure pump.

■ connect red lead of **US 1119** to cavity 1 of plug connector

■ connect black lead of **US 1119** to cavity 2 of plug connector

US 1119 registers approx. 12.0 Volts	**US 1119 does not** register 12.0 Volts

■ check electrical wiring for break in continuity

End

Go to (B) next page

cardiagn.com

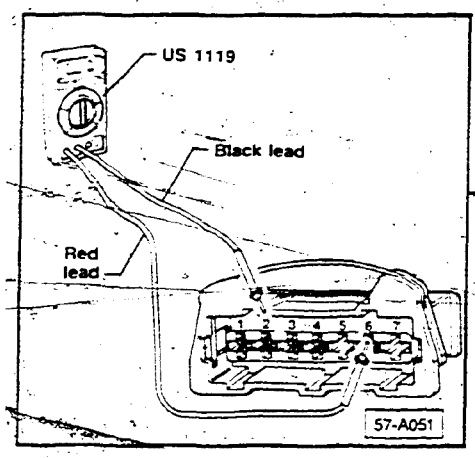

(B)

Check current supply from ignition lock to bi-pressure pump

- insert key into ignition starter lock **do not turn key**
- connect red lead of **US 1119** to cavity **6** of plug connector
- connect black lead of **US 1119** to cavity **2**

US 1119 registers approximately 12.0 Volts	**US 1119 does not** register 12.0 Volts

- check electrical wiring for break in continuity
  or
- replace ignition starter lock

End

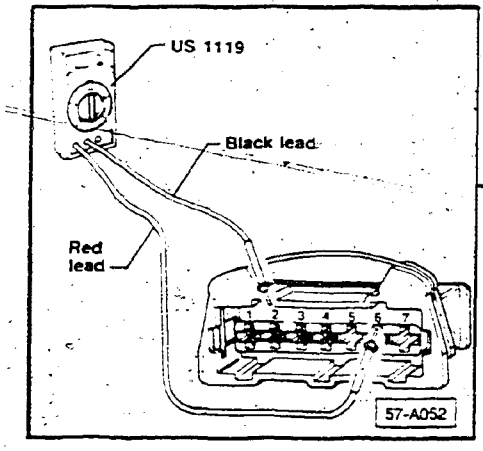

Check ignition starter lock

- remove ignition key
- connect red lead of **US 1119** to cavity **6** of plug connector
- connect black lead of **US 1119** to cavity **2** of plug connector

US 1119 registers 0.0 Volts	**US 1119** registers **more than** register 0.0 Volts

- replace ignition starter lock

End

Go to (C) next page

cardiagn.com

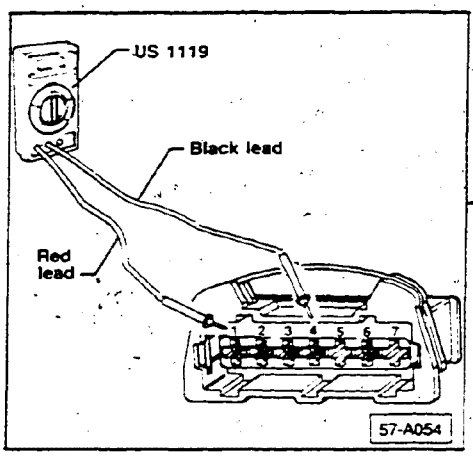

Ⓒ

Check driver's door master activator switch **to lock door**

- connect red lead of **US 1119** to cavity **1** of plug connector
- connect black lead of **US 1119** to cavity **4** of plug connector
- push down driver's door locking button (**locked position**)

US 1119 registers approximately 12.0 Volts	**US 1110 does not** register 12.0 Volts

- check electical wiring for break in continuity
  or
- replace driver's door master activator switch

End

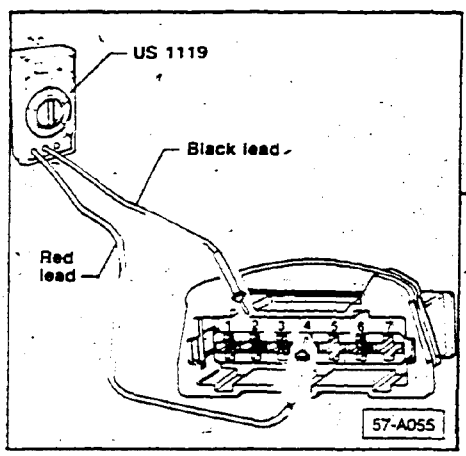

Check driver's door master activator switch **to open door**

- connect red lead of **US 1119** to cavity **4** of plug connector
- connect black lead of **US 1119** to cavity **2** of plug connector
- pull up driver's door locking button (**open position**)

US 1119 registers approximately 12.0 Volts	**US 1119 does not** register 12.0 Volts

Go to Ⓓ next page

- check electrical wiring for break in continuity
  or
- replace driver's door master activator switch

End

cardiagn.com

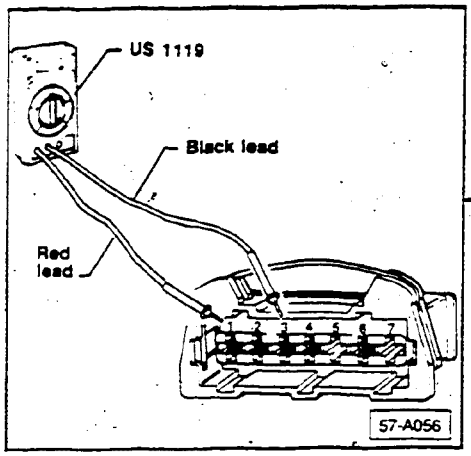

(D)

Check right front door master activator switch **to lock door**

- connect red lead of **US 1119** to cavity **1** of plug connector
- connect black lead of **US 1119** to cavity **3** of plug connector
- push down right front door locking bottom (**locked position**)

US 1119 registers approximately 12.0 Volts	**US 1119 does not** register 12.0 Volts

- check electrical wiring for break in continuity
  or
- replace right front door master activator switch

End

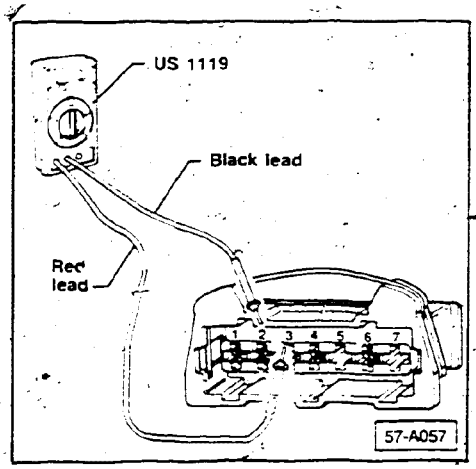

Check right front door master activator switch **to open door**

- connect red lead of **US 1119** to cavity **3** of plug connector
- connect black lead of **US 1119** to cavity **2** of plug connector
- pull up right front door locking button (**open position**)

US 1119 registers approximately 12.0 Volts	**US 1119 does not** register 12.0 Volts

- replace defective bi-pressure pump

End

- check electrical wiring for break in continuity
  or
- replace right front door master activator switch

End

cardiagn.com

Troubleshooting — bi-pressure system

Test condition

- electrical system **OK**

Note

If central door locking system has not been activated for an extended period, key must be turned in lock several times to activate system.

When properly functioning, all locks must close within approximately **two** seconds.

If bi-pressure pump runs longer than **five** seconds, system is leaking.

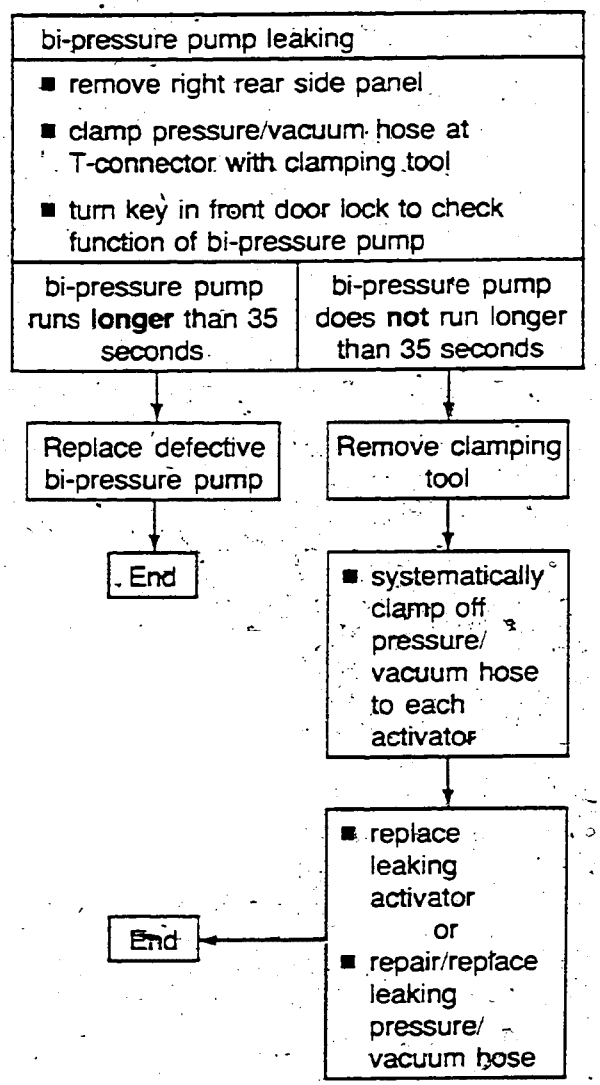

cardiagn.com

Index

Articulated lever
- removing/installing 58.8

Doors, rear
- adjusting 58.10
- assembly 58.2
- Bowden cable, removing/installing 58.8
- component carrier 58.5, 58.12
- gap 58.11
- handle 58.9
- lock 58.7, 58.9
- lower hinge 58.3
- seal plugs, installing 58.5
- shell, removing/installing 58.3

Wind noise
- eliminating 58.11

Window glass
- adjusting 58.5

Window regulator
- assembly 58.4

cardiagn.com

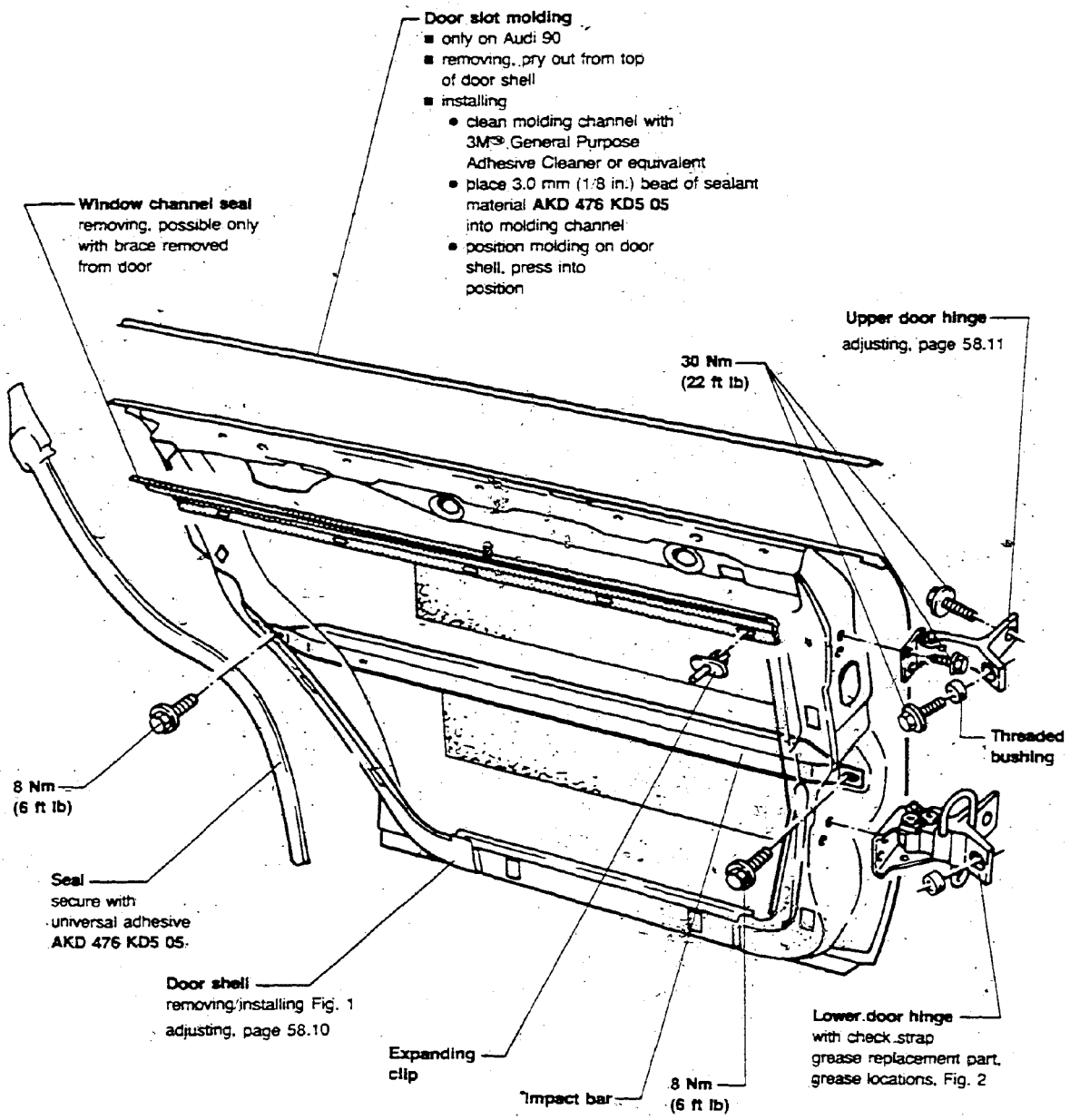

cardiagn.com

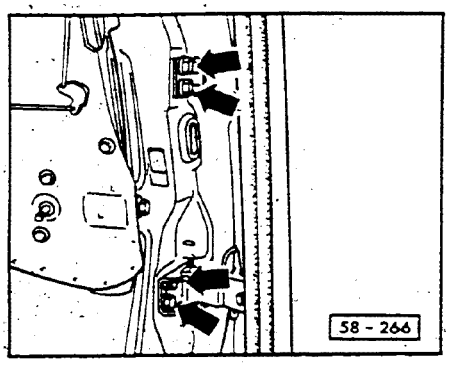

▶ **Fig. 1 Door shell removing/installing**

Removing

- unscrew hex head bolts (**arrows**)

Installing

Install in reverse order, note the following
- adjust door to eliminate wind noises, see page 58.12
- check adjustment of carrier for door components, see page 58.12

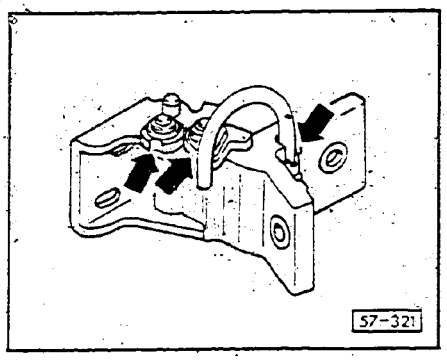

▶ **Fig. 2 Lower door hinge, grease locations**

Apply grease **A0S 126 000 05** or equivalent as shown (**arrows**).

cardiagn.com

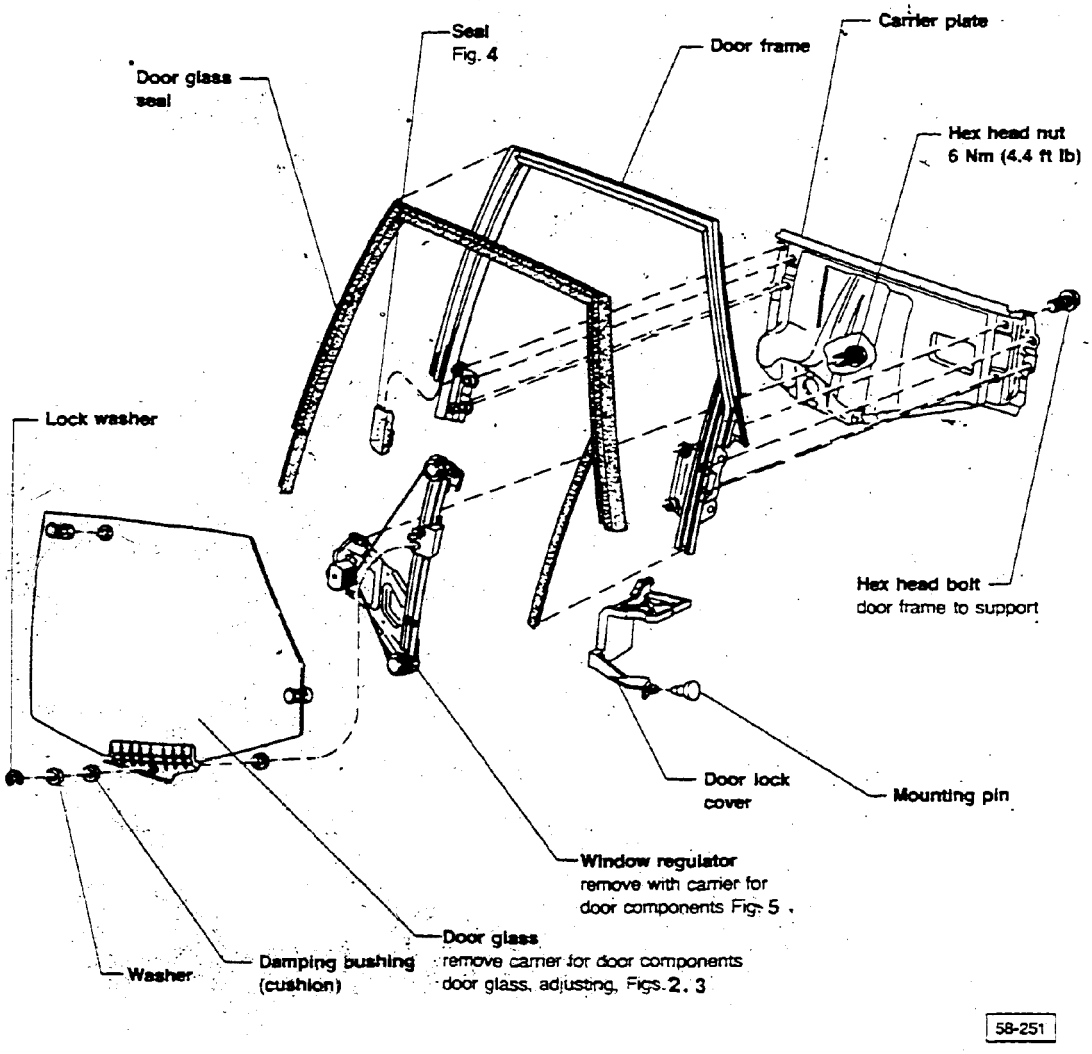

cardiagn.com

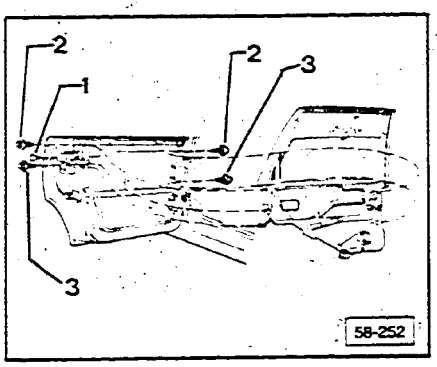

▶ **Fig. 1 Rear door component carrier, removing/installing**

Removing

- remove door trim panel, see Repair Group 70
- unhook cable for inner door release mechanism, Fig. 8
- unclip and remove cable from door carrier
- remove mounting pin **1**, press covering for door lock forward
- remove hex head bolts **2**, **3**

Installing

Install in reverse order, note following:
- torque hex heads bolts 20 Nm (15 ft lb)

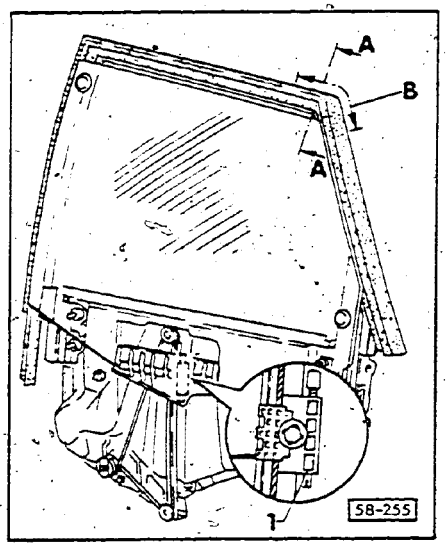

▶ **Fig. 2 Glass, adjusting**

A-A = cross section
B = area between roof and C-pillar
1 = adjustable stop for window regulator

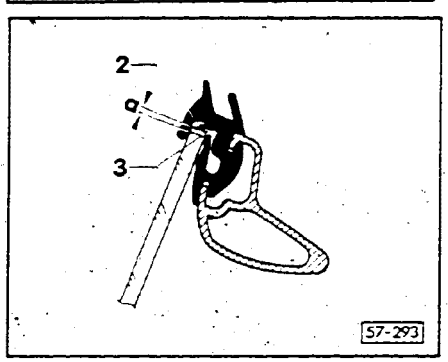

▶ **Fig. 3**

- adjust upper stop of window regulator so upper edge of the window **3** makes contact with the sealing lip **2** in the transition area **B**, Fig. 4
  a = 0 + 0.5 mm (approximately 1/32 in.)

Note

Sealing lip **2** must contact glass to stop leaks.

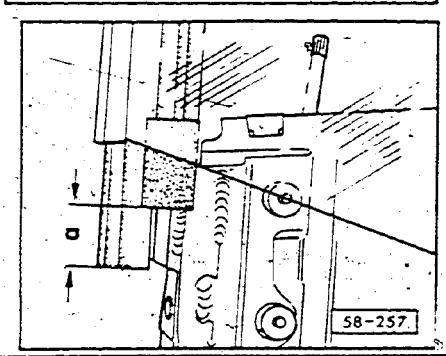

▶ **Fig. 4 Seal plug**

- insert into window channel
  a = 25 mm (1.0 in.)
  - measured from end of window channel

Note

Plug is used to seal and prevent air noise.

cardiagn.com

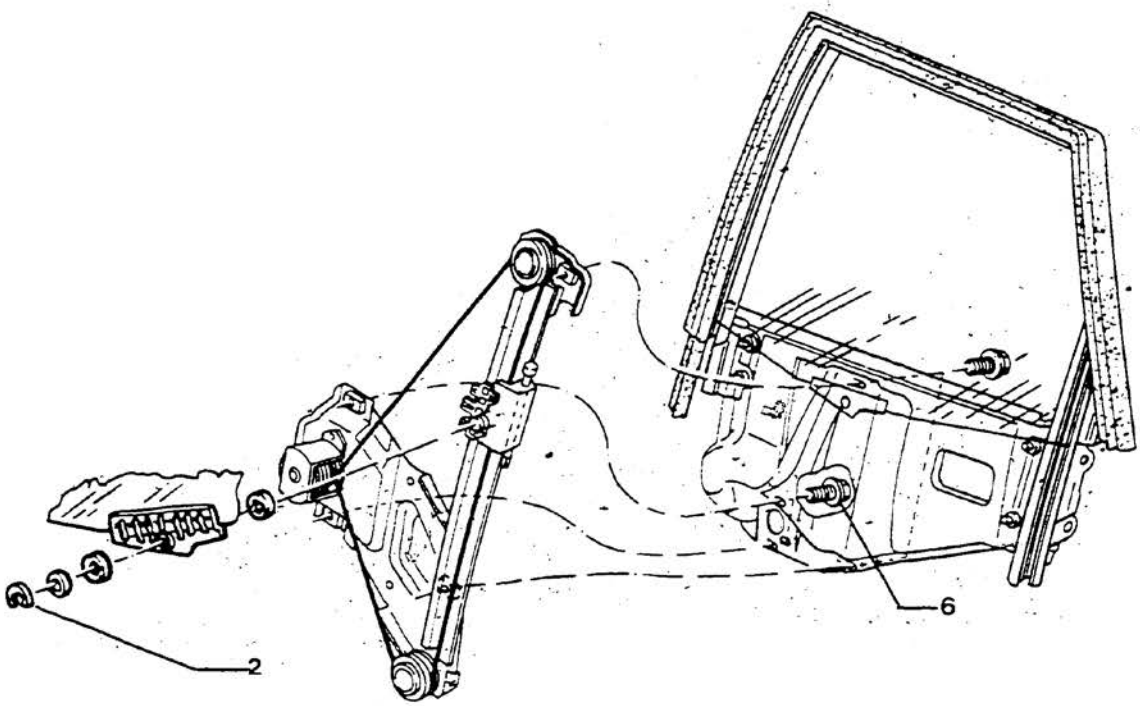

▶ **Fig. 5 Window regulator, removing/installing**

Removing

- remove door component carrier, Fig. 1
- remove lock washer 2
- remove mounting washer and bushing
- remove window, window regulating bolts
- remove hex head bolts 6
- remove regulator hex head bolts in lower door

Installing

Install in reverse order, note following:
- torque hex bolts 6 Nm (4.4 ft lb)
- install bushing between window regulator and glass
- check and adjust alignment of window, adjusting, Figs. 3, 4

cardiagn.com

THIS FRAME INTENTIONALLY LEFT

BLANK

cardiagn.com

Note

Turn adjustor part to adjust free play between door handle and door lock.

Release lever should not be forced when adjusting.
- maximum play between release lever and adjustor 0.5-1.0 mm (1/32-3/64 in.)

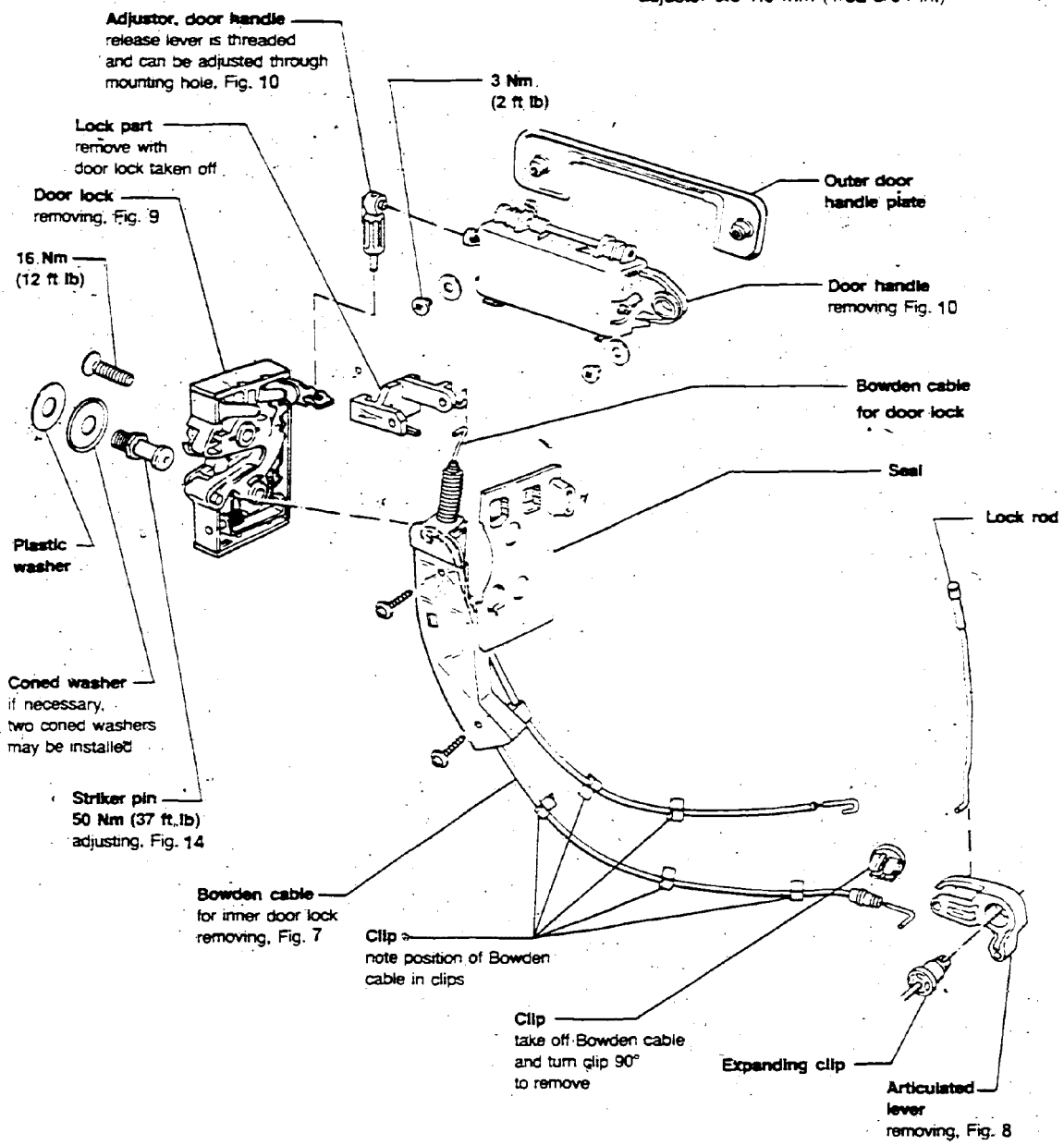

cardiagn.com

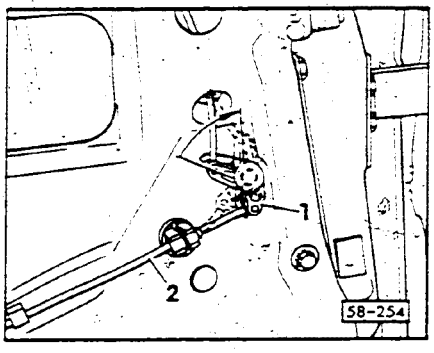

▶ **Fig. 6 Removing Bowden cable for door lock from articulated lever**

- unclip Bowden cable from clip
- turn articulated lever **1** approximately 45° in direction of arrow and remove Bowden cable **2**

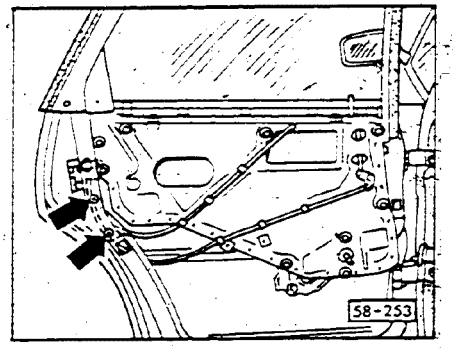

▶ **Fig. 7 Bowden cable for inner door mechanism, door lock, removing/installing**

Note

Bowden cables can be removed with mounting plate.

Removing

- remove door trim plate (see Repair Group 70)
- unclip Bowden cable
- remove door lock, Fig. 10
- unscrew mounting plate from Bowden cable
- pull out Bowden cable with lock part

Installing

Install in reverse order.

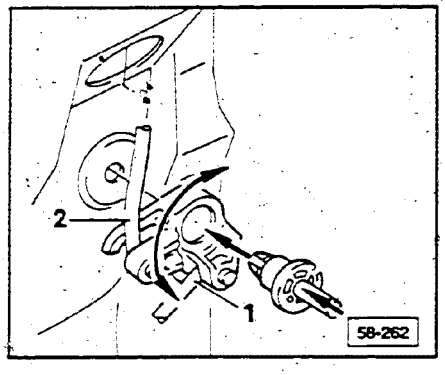

▶ **Fig. 8 Articulated lever, removing/installing**

Removing

- press pin from expanding clip
- swivel articulated lever in direction of arrow, detach Bowden cable **1** and securing rod **2**

Installing

Install in reverse order.

cardiagn.com

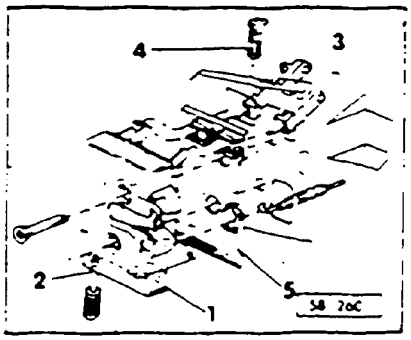

▶ Fig. 9 Door lock, removing/installing

Removing

- remove door panel (see Repair Group 70)
- pivot lever 1 by pulling Bowden cable in direction of arrow and holding in position with screwdriver through hole 2
- unhook Bowden cable
- remove bolts
- pull door lock out of fastener 3, gasket 5

Installing

Install in reverse order, note following
- attach Bowden cable
- fit door lock into fastener
- align door handle to door lock
- adjust as required, page 58 10
- guide operating mechanism 4 into door lock operating lever

Note

This operation can be observed through the access hole, see Fig 11

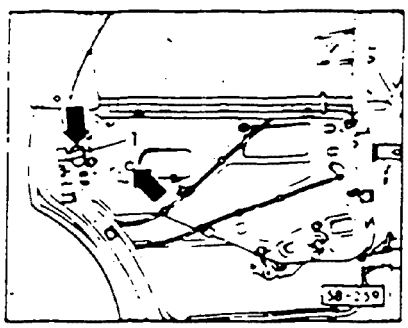

▶ Fig. 10 Door handle, removing/installing

Removing

- carrier for door components installed, trim panel removed
- push fastener 1 downwards to lock door lock
- press bolts through access holes (**arrows**)
- take out door handle together with operating mechanism toward interior door

Installing

Install in reverse order, note the following
- first guide operating mechanism into door lock release lever

cardiagn.com

THIS FRAME INTENTIONALLY LEFT

BLANK

cardiagn.com

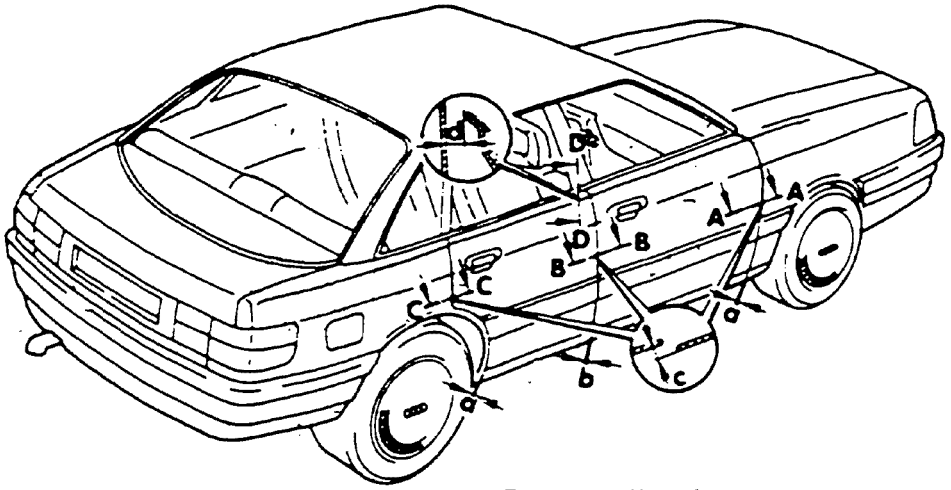

▶ Doors adjusting

1 — Adjustment of door shell

A — gap width
Adjustment of doors with hinges, Fig. 12
a = 5 ÷ 1 mm (13/64 – 3/64 in.)
b = 5.5 – 1 mm (7/32 – 3/64 in.)

B — height adjustment
Adjustment of mounting hinges to B-pillar, see Fig. 12

C — to prevent wind noises, adjust using slots in the mounting hinges and at back doors at striker, Figs. 13

Section A-A, B-B, C-C:
C = 0.5 ÷ 0.5 mm (1/64 – 1/64 in.)

Section D-D:
d = 14.5 mm (9/16 in.)

2 — Adjusting carrier for door components

A — height adjustment
Adjust displacement of carrier in door shell upwards or downwards, Figs. 15 16

B — seal
Adjust carrier towards center of vehicle (screw upper carrier bolts loosely), Fig. 16

cardiagn.com

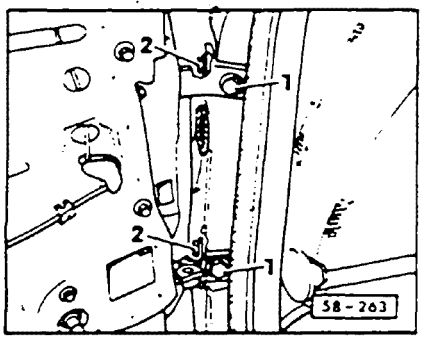

▶ **Fig. 11 Door gap, adjusting**

- with bolts **1** removed, screw out threaded bushing until it no longer makes contact with B-pillar
- loosen bolts **2**, close door and adjust gap by moving the door
  a = 5 ÷ 1 mm (13/64 – 3/64 in.)
- open door, tighten bolt **2** to 30 Nm

Note

Loosen or tighten with **US 2598**.

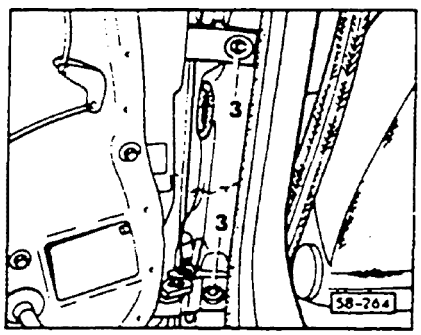

▶

- screw in threaded bushings **3** until they make contact with B-pillar
- screw in bolts, tighten to 30 Nm (22 ft lb)
- check gap

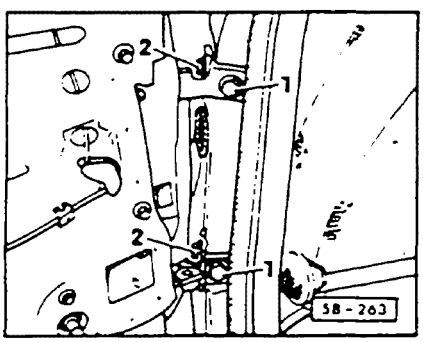

▶ **Fig. 12 Door height, adjusting**

- loosen bolts **1** and **2**

Note

Loosen or tighten with **US 2598**.

- move door with hinges in the extra large holes
- tighten bolts to 30 Nm (22 ft lb)

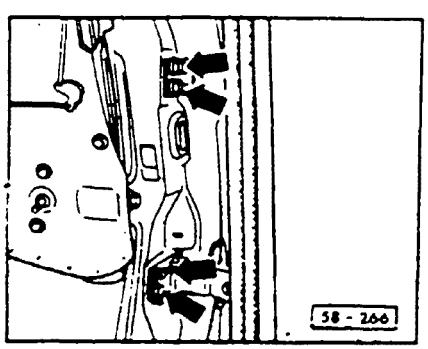

▶ **Fig. 13 Wind noise, eliminating**

- loosen front door bolts (**arrows**), move door in hinge slots, see page 58.15
  - dimension between door shell and B-pillar
    d = 14.5 mm (9/16 in.)
- tighten bolts to 30 Nm (22 ft lb)

cardiagn.com

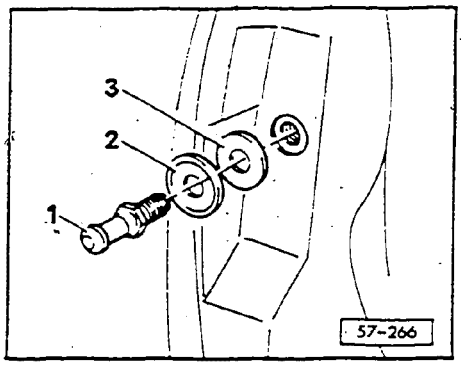

Fig. 14 Rear door, elimination of wind noise

Adjustment of striker pin will eliminate noise at rear of door.

- adjust striker pin
  - 50 Nm (37 ft lb)

1 = striker plate
2 = dished washer

Note

If necessary, two dished washers can be used.

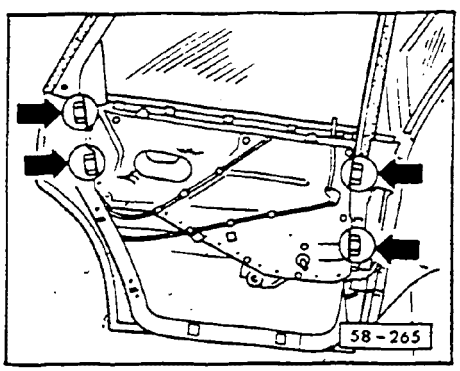

Fig. 15 Adjusting carrier for door components

Note

Window and door shell must also be adjusted.

- loosen bolts
- close door
- press carrier for door components against roof and pillar
- use helper to tighten first upper then lower bolts
  - 20 Nm (15 ft lb)
- ensure carrier is installed with more pressure on top
  - do **NOT** press in door shell
- check all dimensions

cardiagn.com

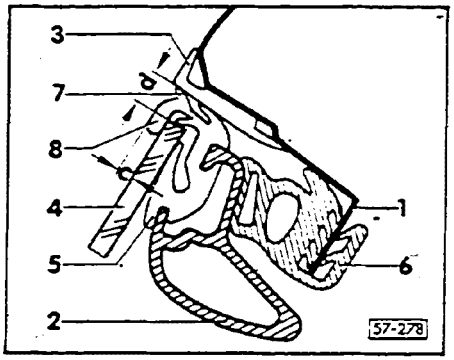

▶ **Fig. 16 Door component carrier, dimensions**

- left door cross section shown

- the outer sealing lip **7** must make contact along the edge of the pillar and roof trim molding **3**
- the outer window sealing lip **8** must not project outwards above the roof trim molding **3**

c = 3.5 ÷ 1 mm (9/64 ÷ 3/64 in.)
d = 8.1 ÷ 1 mm (5/16 ÷ 3/64 in.)

1 = sealing flange
2 = door frame
3 = roof trim molding
4 = window
5 = window seal
6 = inner door seal
7 = weatherstrip
8 = weatherstrip on window

cardiagn.com

Index

index continues on next row down

80/90, 80/90 Quattro

Electrical drive
- checking/adjusting 60.13

Sealing gap
- fine adjustment 60.13

Sunroof
- assembly 60.2, 60.7
- disassembly 60.6
- installing 60.10
- removing 60.5

Sunroof lid
- adjusting 60.12
- assembly 60.3
- installing 60.11
- removing 60.4

Sunroof motor
- adjusting 60.13
- installing 60.14
- removing 60.5

Sunroof troubleshooting
- procedure 60.16

Sunroof wind deflector
- adjusting 60.14a

cardiagn.com

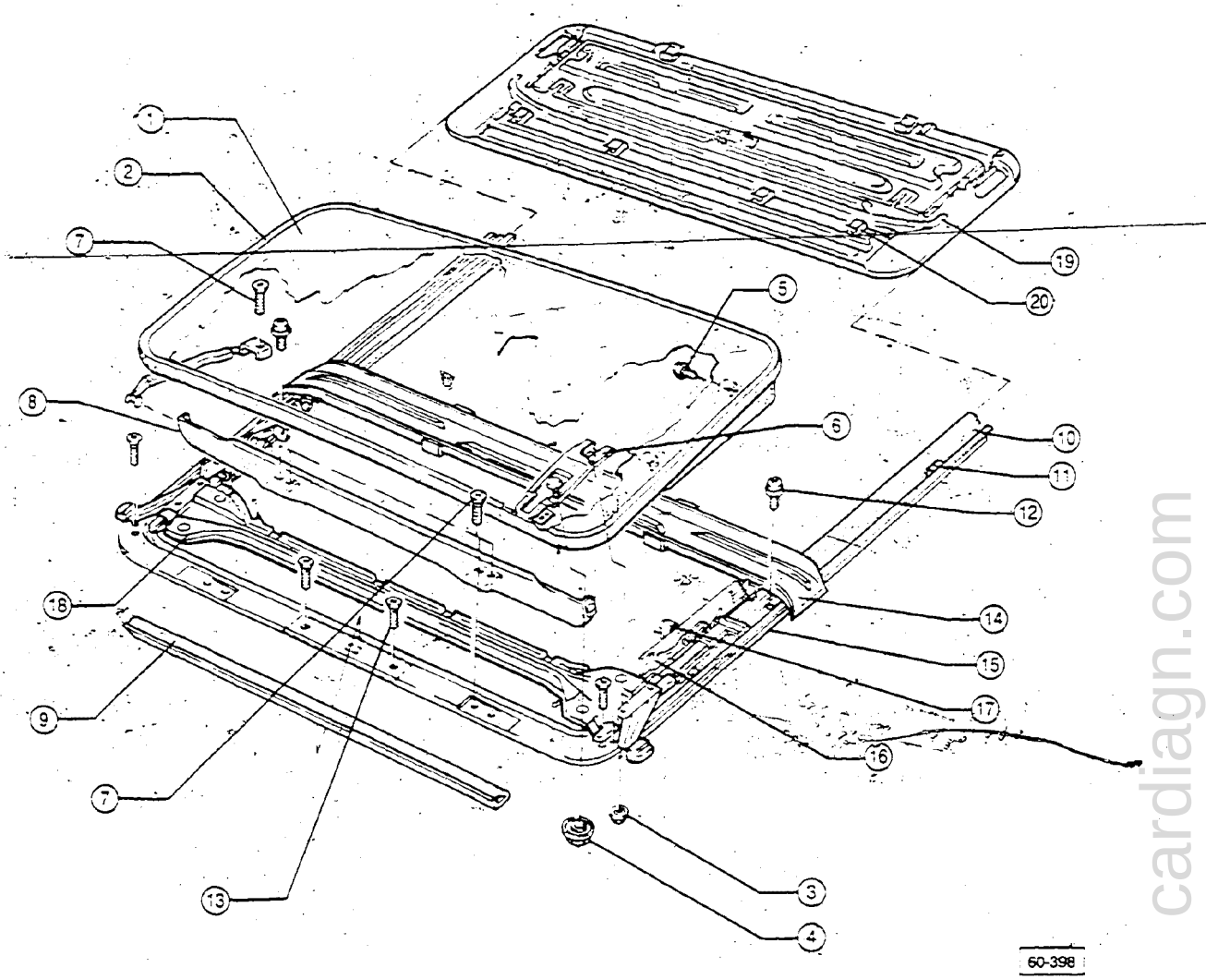

1 — Sunroof lid, removing 60.4
2 — Sunroof lid seal
3 — Sunroof lid bolt
4 — Height adjustment bolt, front
5 — Height adjustment screw, rear
6 — Sunroof lid hinge
7 — Flat head screw
8 — Wind deflector
9 — Acoustic seal
10 — Side guide rail
11 — Stop bracket
12 — Oval head screw
13 — Flat head screw
14 — Rain deflector
15 — Rear guide (with cable)
16 — Tilt bracket
17 — Sunroof headliner lifter retainer
18 — Front sunroof support
19 — Sunroof lid headliner
20 — Sunroof lid headliner retaining clip

cardiagn.com

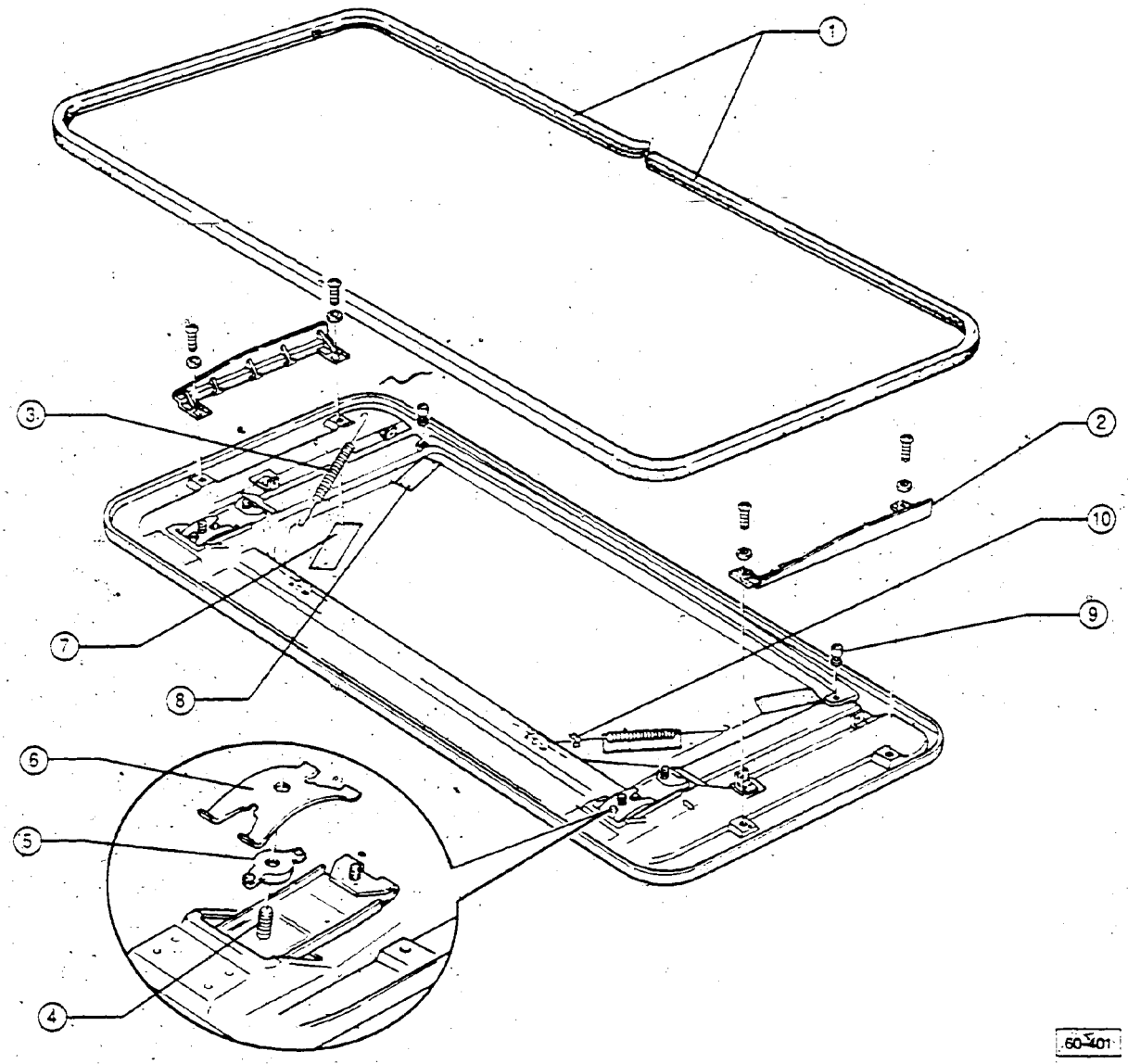

1 — Sunroof lid seal
2 — Trim piece
3 — Tension spring
4 — Sunroof lid hinge
5 — Rubber spring
6 — Leaf spring
7 — Protective felt strip
8 — Protective felt strip
9 — Rubber stop
10 — Tape (holds spring in place)

cardiagn.com

Sunroof lid, removing

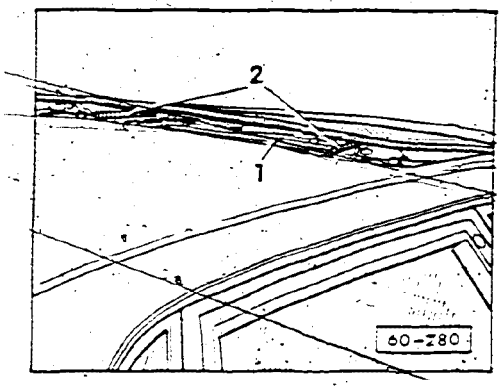

- tilt sunroof up at rear
- push flap (1) downwards
- unhook both tension springs (2) from flap

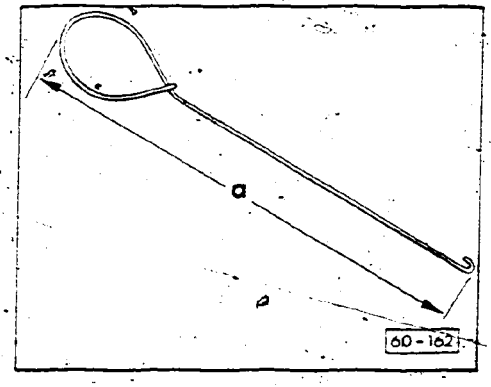

To make spring removal easier, make special removal tool

- a = approximately 300mm (12.0 in)

- dip hook in paint to prevent damage to vehicle

CAUTION

Put masking tape around front and rear of sunroof opening to protect paint when removing sunroof pieces.

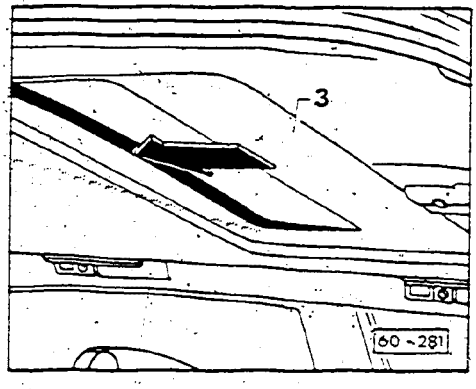

- reach into sunroof opening and unclip trim panel (3) by pulling toward back
- push trim panel back into roof

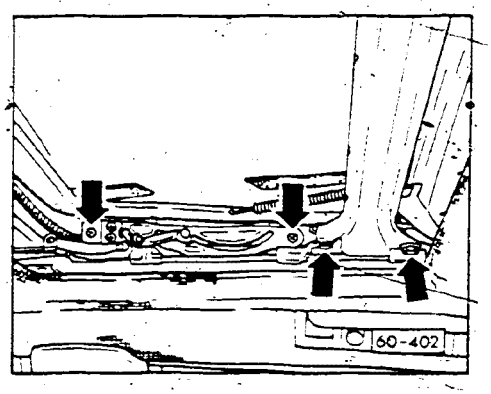

- close sunroof
- remove mounting screws and nuts (**arrows**)
- carefully lift sunroof lid from vehicle

cardiagn.com

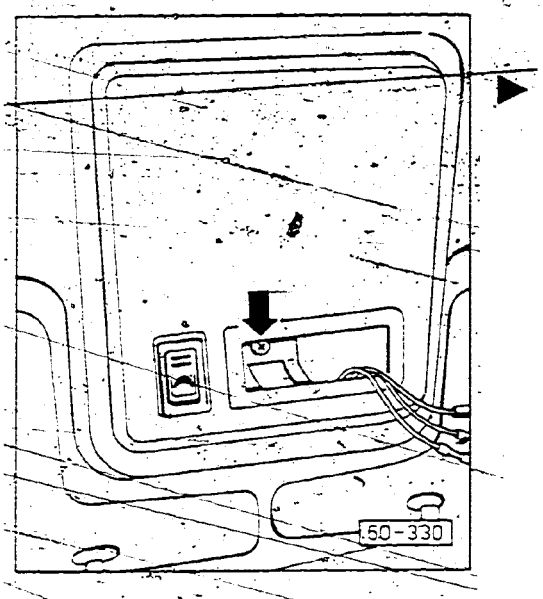

Sunroof motor, removing

- remove sunroof trim and sunroof lid from vehicle
- unclip dome light and disconnect electrical connectors
- unscrew cover (**arrow**) and push forward to remove

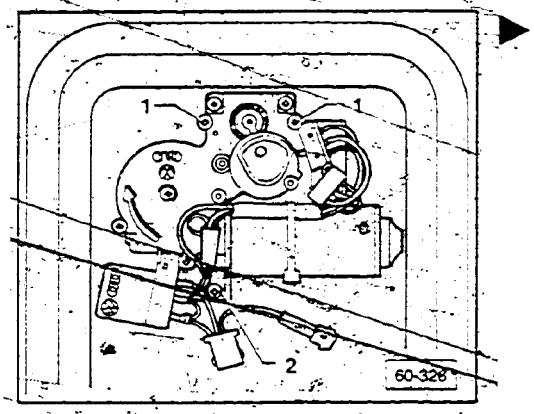

- disconnect motor electrical connectors
- remove screws (1) and (2) noting position of washer under screw (2) located between motor and roof

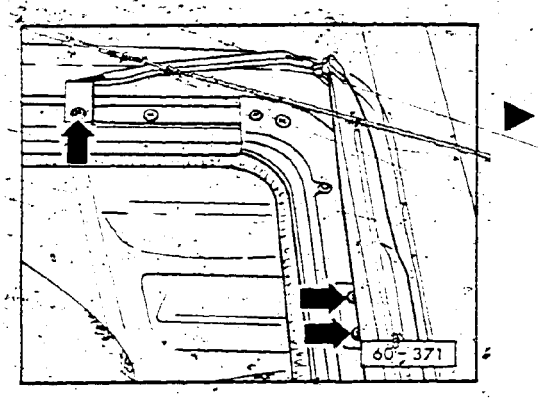

Sunroof assembly, removing

- remove sunroof lid
- remove sunroof motor
- push rear guide with cables and sunroof support back far enough to expose deflector mounting screws (**arrows**)
- unscrew wind deflector screws (**arrows**)
- remove wind deflector

cardiagn.com

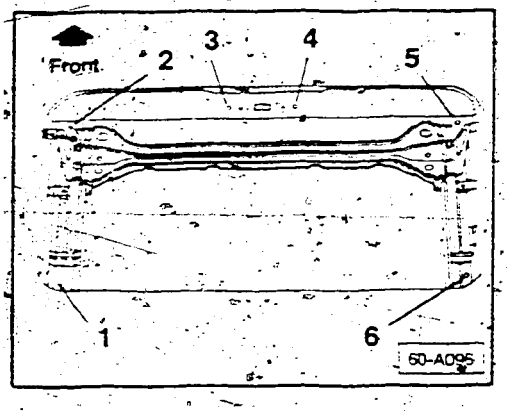

- remove six M4 X 16 oval head screws (**arrows**)
  - screws **1** and **6** have lock washers
- move complete sunroof assembly up and forward out of sunroof opening
- remove sunroof headliner from vehicle

Note

The following repairs are done with the sunroof assembly on the workbench.

Sunroof assembly, disassembly

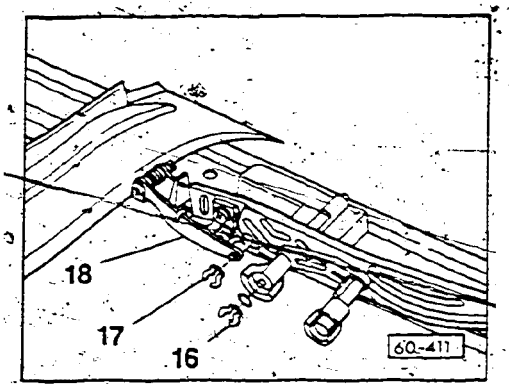

- remove sunroof assembly
- remove circlip (**17**) and pull off lever (**18**) on both sides
- remove circlip (**16**) and O-ring
- remove guide plate/tilt bracket

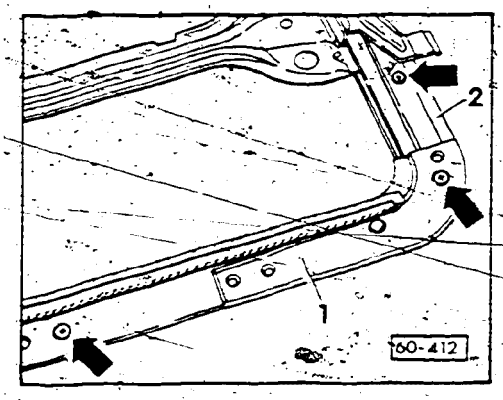

- remove screws (**arrows**) and remove front rail cover
- pull sunroof support forward and out of guide rails

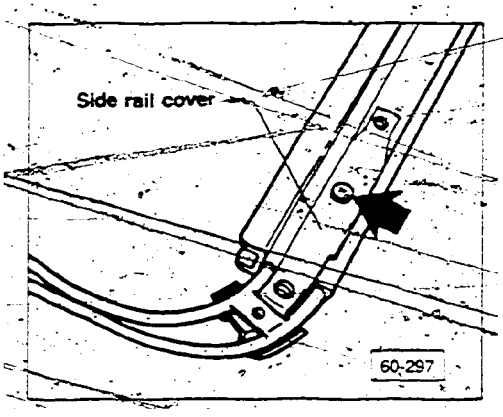

- remove side rail cover screw (**arrow**) from both sides
- remove side rail covers

cardiagn.com

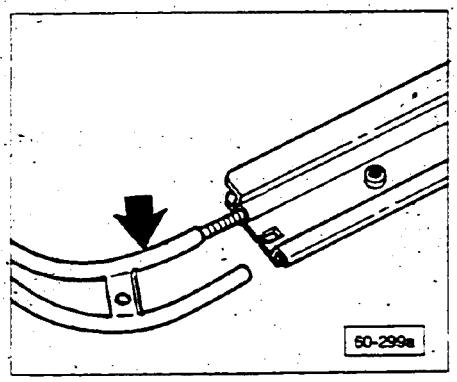

- remove cable guide tubes (**arrow**) from guide rail

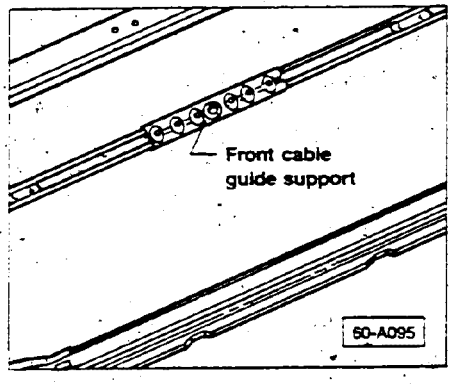

- remove cable guide tubes from cable guide support

> **CAUTION**
>
> Check front cable guide support for broken metal clip. Replace clip if necessary. Clean all cable guide tubes, tracks and rails before reassembling.

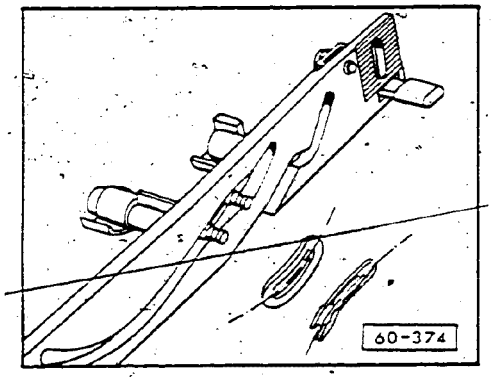

- remove sunroof lid trim retainer from guide plate/tilt bracket.

Sunroof assembly, assembling

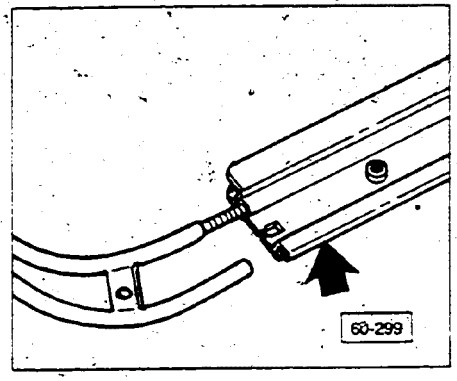

Note

Assemble sunroof on bench and then install complete sunroof assembly in vehicle

- lightly lubricate new sunroof cables with mineral oil
- install cables into guide rail (**arrow**) on both sides
- install cables into guide tubes and push guide tubes into guide rail

cardiagn.com

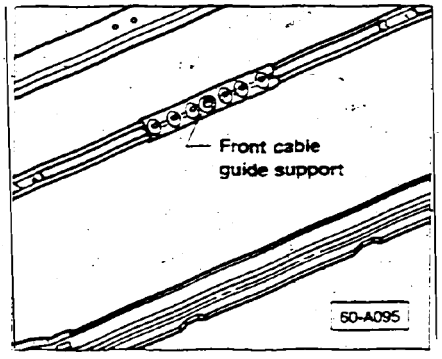

- install cable guide tubes into front cable guide support

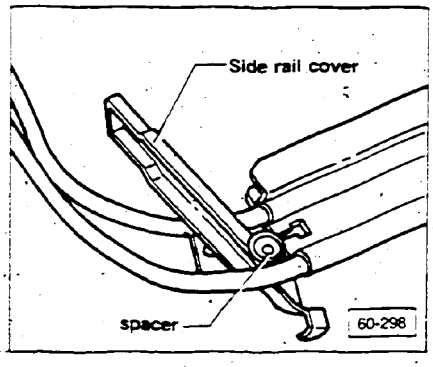

- install side rail covers (both sides)
- put Loctite on screws and tighten
  - 1.0 ÷ 0.2 Nm

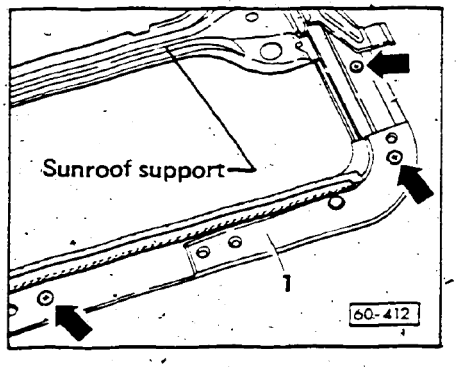

- slide sunroof support on to guide rails
- install front rail cover (1)
- coat screws with Loctite
  - 1.0 ÷ 0.2 Nm

CAUTION

Front sunroof support is "twisted" when manufactured. Therefore, one end of guide rail will be higher than other. This is normal. Do not try to correct this condition.

cardiagn.com

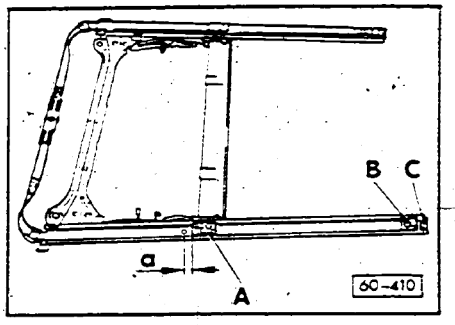

- check that felt backing is installed

  A = 55mm X 25mm
  B = 50mm X 35mm
  C = 15mm X 30mm
  a = 20mm gap

- install sunroof trim retainer on guide plate/ tilt bracket
- install washer and clip as shown

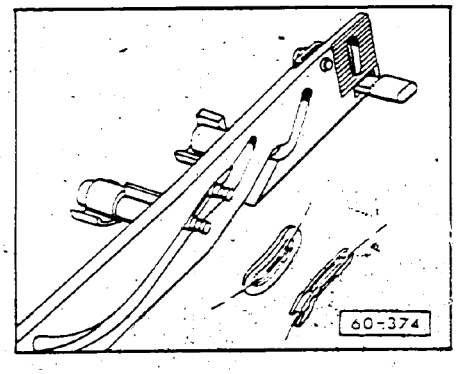

- install guide plate/tilt bracket over pin on sunroof cable
- install O-ring and clip (**16**)
- attach rain deflector lever (**18**) to guide plate/tilt bracket and install clip

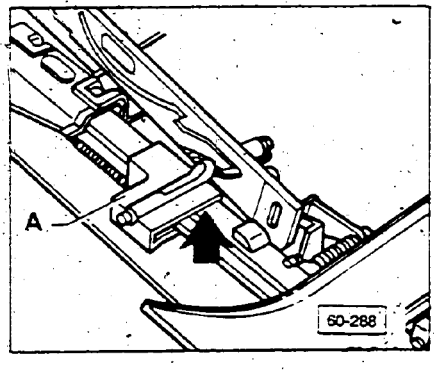

- slide cables **A** (guide plate/tilt bracket attached) rearward until aligned with marking line on guide rail (**arrow**)

> **CAUTION**
>
> When lining up cables to guide rail, always move cables from front of vehicle rearward to marking lines. Do not move cables from rear of vehicle forward to marking lines.

- slide sunroof headliner into guide rails from rear

cardiagn.com

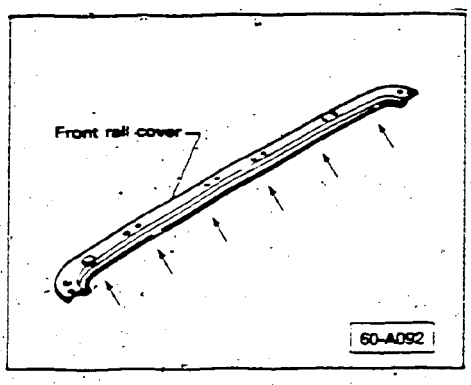

- install acoustic gasket on front rail cover (**arrows**)

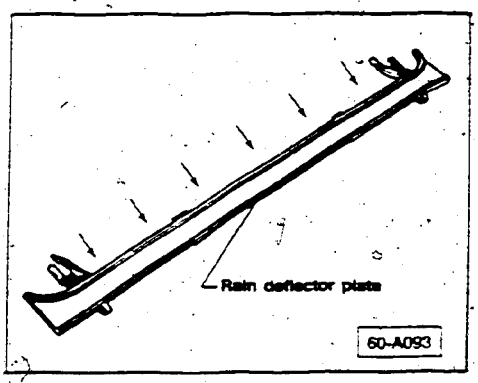

- install acoustic gasket on rain deflector plate (**arrows**)

Note

Be sure that lip of rear acoustic gasket faces front of vehicle.

Sunroof assembly, installing

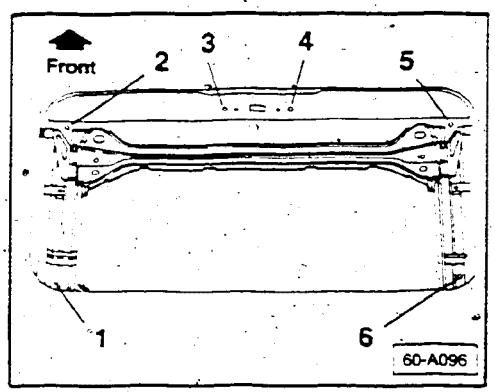

- install entire sunroof assembly into vehicle
- coat six M4 X 16mm screws with Loctite and tighten (**arrows**)
  - 1.0 ÷ 0.2 Nm

cardiagn.com

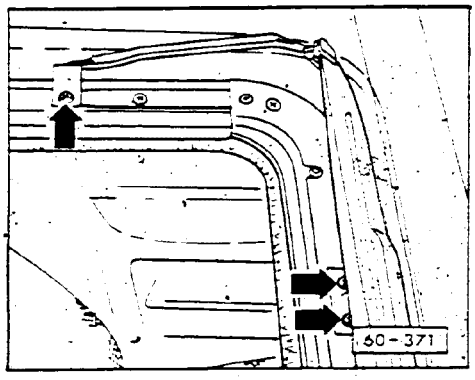

- install sunroof wind deflector
- coat screws (**arrows**) with Loctite and tighten
  - 1.0 ÷ 0.2 Nm
- remove masking tape from around sunroof opening

Sunroof lid, installing

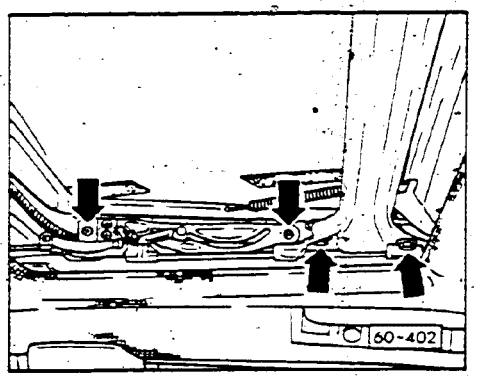

- install sunroof lid in opening
- start all screws and bolts but **do NOT tighten**

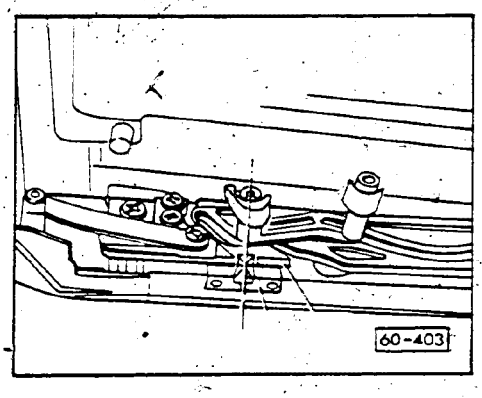

- check that mark on rear guide aligns with mark on guide rail (both sides)

CAUTION

Sunroof drive gear must not be engaged when trying to check parallel running of sunroof cables.

CAUTION

When lining up cables to guide rail, always move cables from front of vehicle rearward to marking lines. Do not move cables from rear of vehicle forward to marking lines.

cardiagn.com

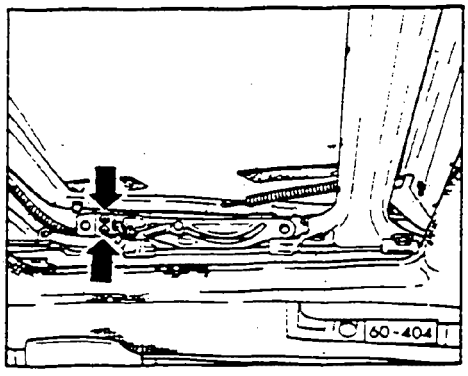

- check that serrations mesh on sunroof lid and rear guide

If **NOT**
- loosen screws (**arrows**) and adjust
- tighten screws
  - 2.0 Nm

Sunroof lid, adjusting

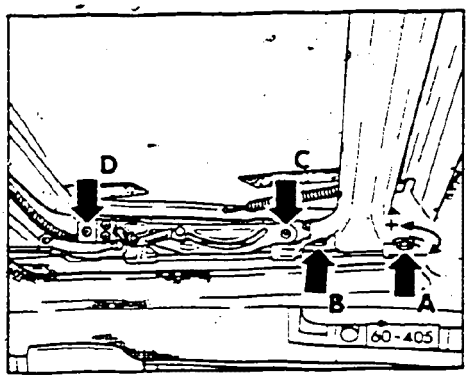

Note

To reduce the possibility of wind noise, the front of sunroof lid must be lower than roof line and rear of sunroof lid must be higher than roof line.

Front height, adjusting

- turn in adjusting nut **A** but do not tighten
- thread nut **B** on to bolt and tighten
  - 6.0 Nm
- turn adjusting nut **A** until front of sunroof lid is approximately 1.0mm below roof line (see illustration 60-075)

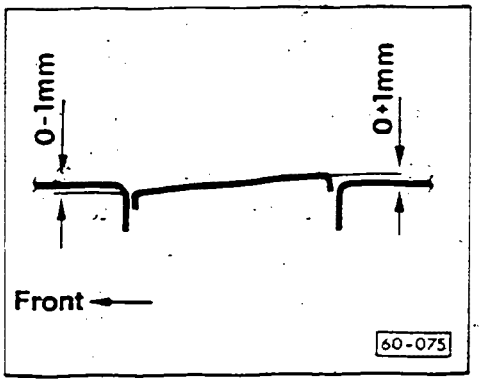

CAUTION

Never tighten nut **A** to a specific torque or tighten securely.

Coat adjusting nut **A** with Loctite to prevent it from loosening.

Rear height, adjusting

Note

Sunroof remains closed during adjustment.

With **C** and **D** loose,
- push sunroof lid to proper height according to illustration 60-075
- tighten screws **D** (both sides)
  - 4.5 Nm

tighten screws **C** (both sides)
- 4.5 Nm

- open sunroof lid to rear 50mm and close until marks on guide and side rail align
- check height adjustment (front and rear)
- re-adjust if necessary

cardiagn.com

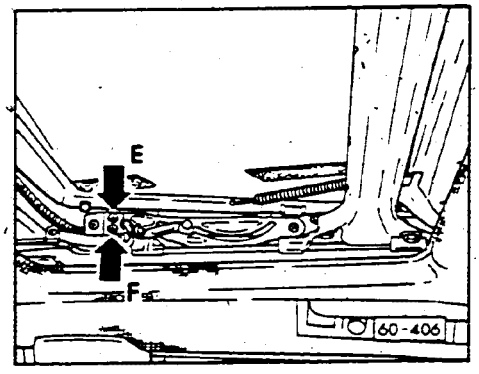

Sealing gap, fine adjustment

Note

This procedure ensures that the gap between the water drain tray and the sunroof lid is properly sealed.

Do this adjustment after height adjustment and before installing sunroof headliner trim.

- tilt sunroof lid fully to top
- loosen screws **E** and **F** on both sides
- close sunroof

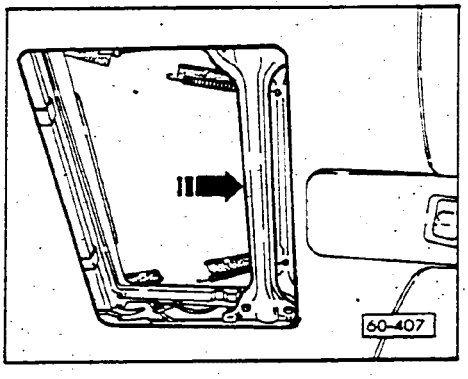

- open sunroof lid to rear 50mm and close until marks on guide and side rail align (both sides)
- push lid forward lightly by hand
- tighten screws **E** (both sides)
  - 2.0 Nm
- tighten screws **F** (both sides)

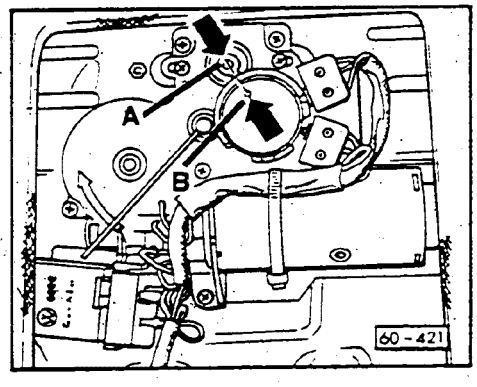

Electrical drive, checking/adjusting

Note

Check electrical drive positioning with sunroof motor installed.

- detach sunroof lid headliner and slide back into roof
- remove cover to sunroof motor
- open sunroof 50mm to rear (never to the tilt position) and close
  - tab **A** on cable drive gear must align with hole **B** in motor cam

Note

When these points are aligned, the sunroof motor is in the "0" position

If the motor is not in the "0" position after opening and closing,
- adjust motor to "0" position

more

cardiagn.com

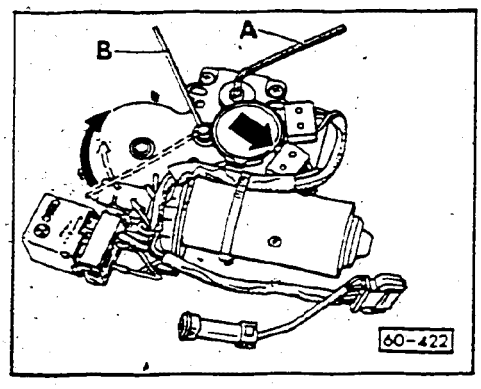

Adjusting

Note

This adjustment can only be done with the sunroof motor removed.

- remove sunroof motor
- disengage sunroof motor from drive gear by moving lever **B** in direction of arrow cast on motor
- insert hand crank or 4mm inside hex wrench into drive pinion **A**
- turn drive pinion (to right only) with crank or wrench until the pin on the sunroof stop switch (closed position) falls into the recess of the motor cam (**arrow**)

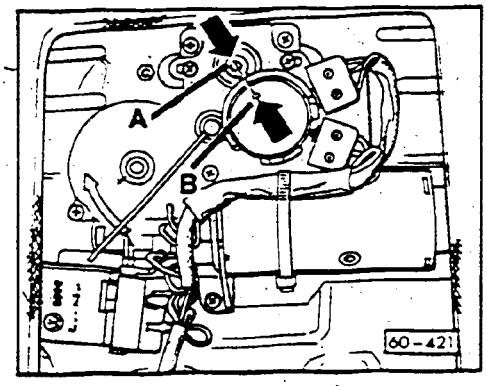

Note

In this position the tab on the pinion drive gear **A** is aligned with the hole in motor cam **B**

Sunroof motor, installing

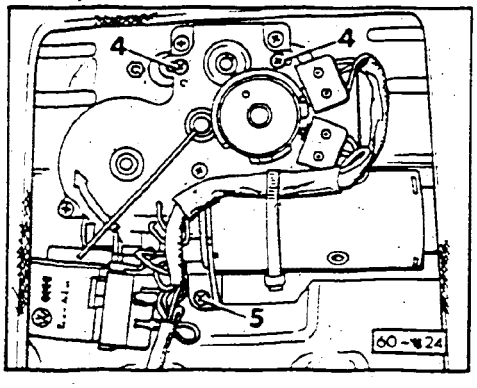

CAUTION

Follow motor tightening sequence exactly or motor will be noisy during operation.

- apply Loctite to all screws
- start all screws but do not tighten

Note

Check that spacer is in place on screw **5** between sunroof motor and mounting point on roof.

- tighten screws **4** (the longer screws)
  - 2.0 Nm (1.4 ft lb)
- tighten screw **5** (the shorter screw)
  - 2.0 Nm (1.4 ft lb)
- install electrical connectors and cover with foam to prevent rattles
- install sunroof lid headliner trim
- install cover over sunroof motor
- install dome light

cardiagn.com

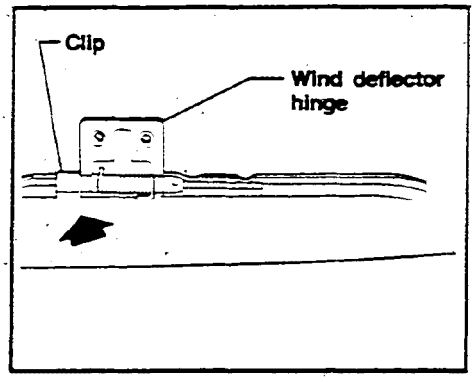

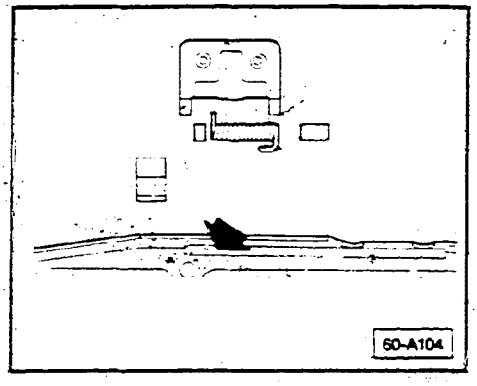

Sunroof wind deflector, adjusting

To prevent the sunroof wind deflector from making a buffeting noise during driving with the sunroof fully open, do the following:

- open sunroof and remove wind deflector

On both wind deflector hinges,
- slide plastic clip (**arrow**) on deflector to side and remove
- slide hinge assembly off wind deflector hinge pin

On both wind deflector hinge pins,
- bend hinge pin (**arrow**) down 2mm (5/64 in.) closer to surface of wind deflector
- reinstall hinge assemblies
- reinstall wind deflector

cardiagn.com

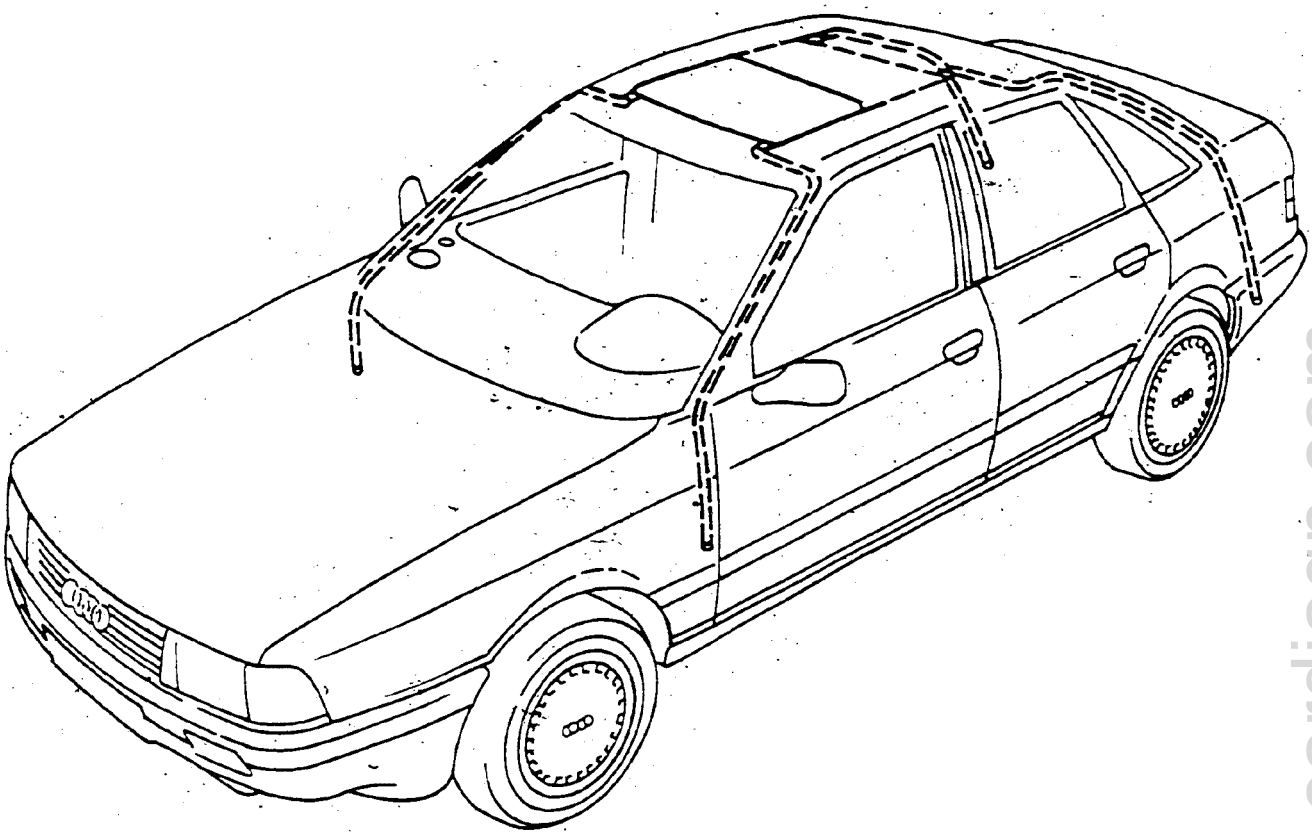

60-416

cardiagn.com

THIS FRAME INTENTIONALLY LEFT

BLANK

cardiagn.com

THIS FRAME INTENTIONALLY LEFT

BLANK

cardiagn.com

Electric sunroof does not operate

Troubleshooting preparations

- thermofuse for power window/sunroof is **OK**
- interior light removed
- sunroof motor cover removed

Power window/sunroof control unit, checking

Note

Do first test with control unit connected.

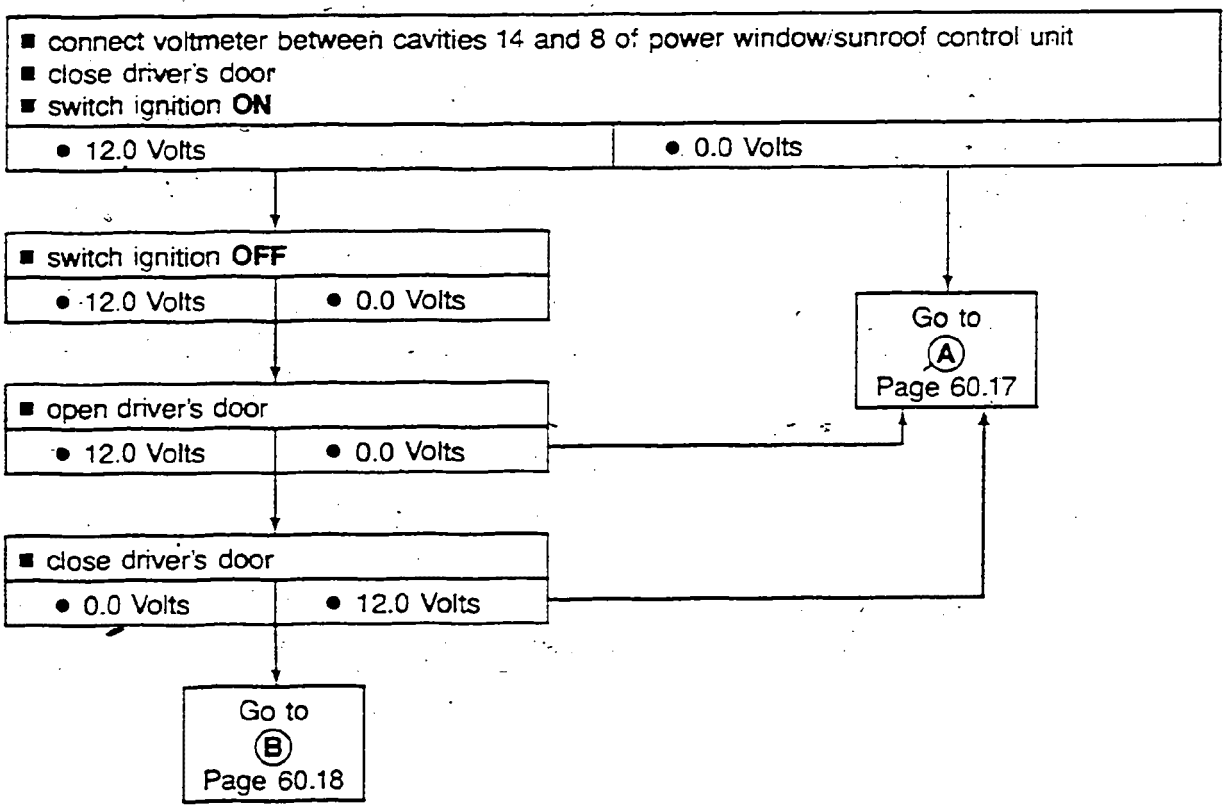

cardiagn.com

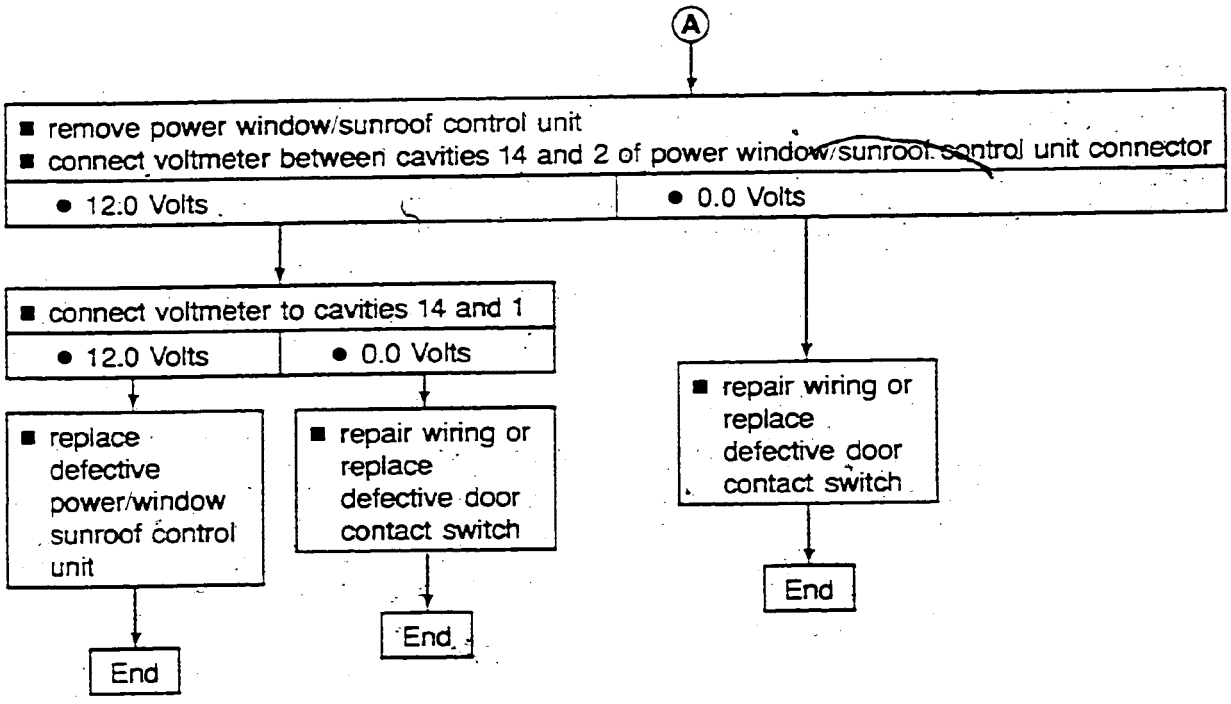

cardiagn.com

Sunroof switch, checking

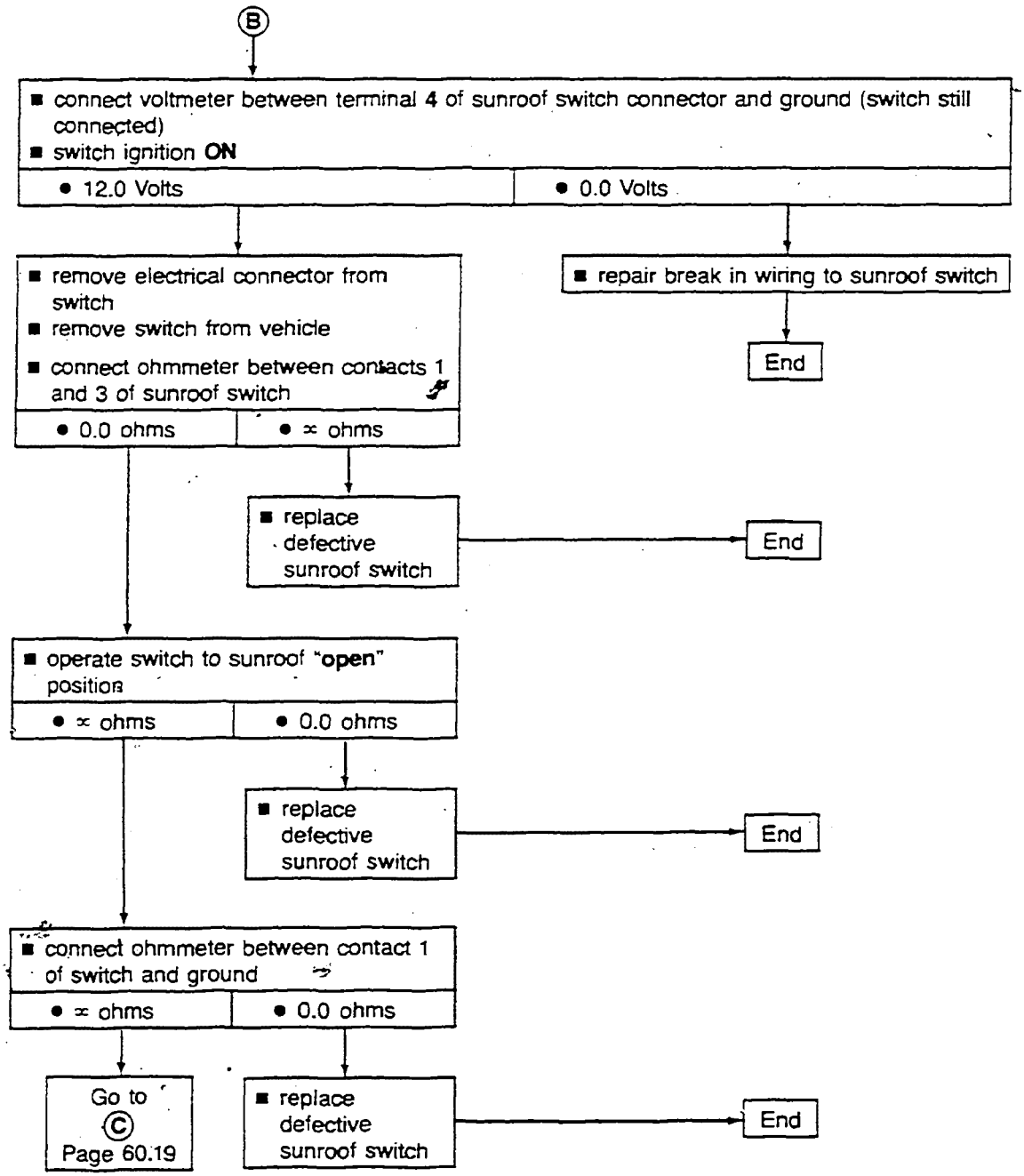

cardiagn.com

Sunroof switch, checking, continued

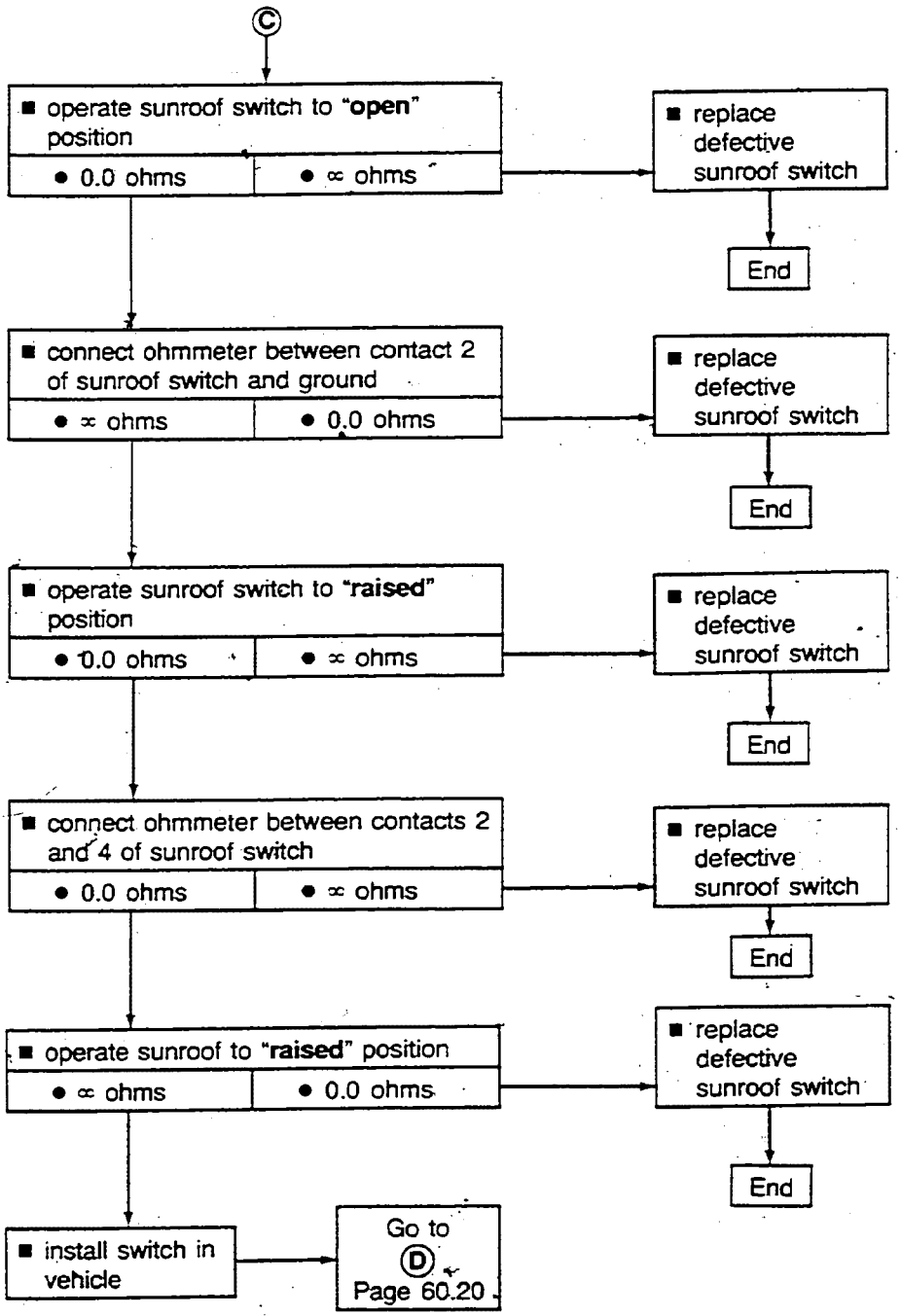

cardiagn.com

Sunroof relay checking

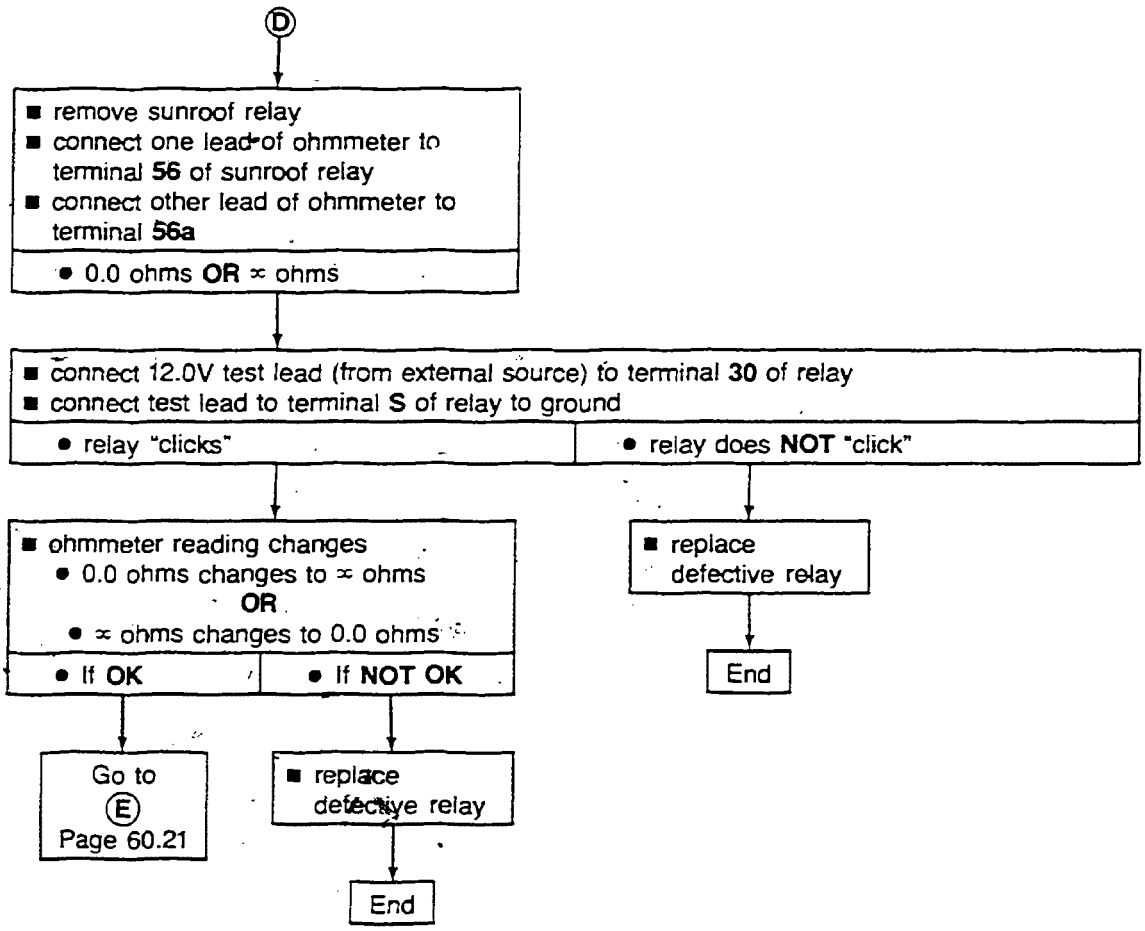

cardiagn.com

Sunroof relay, checking, continued

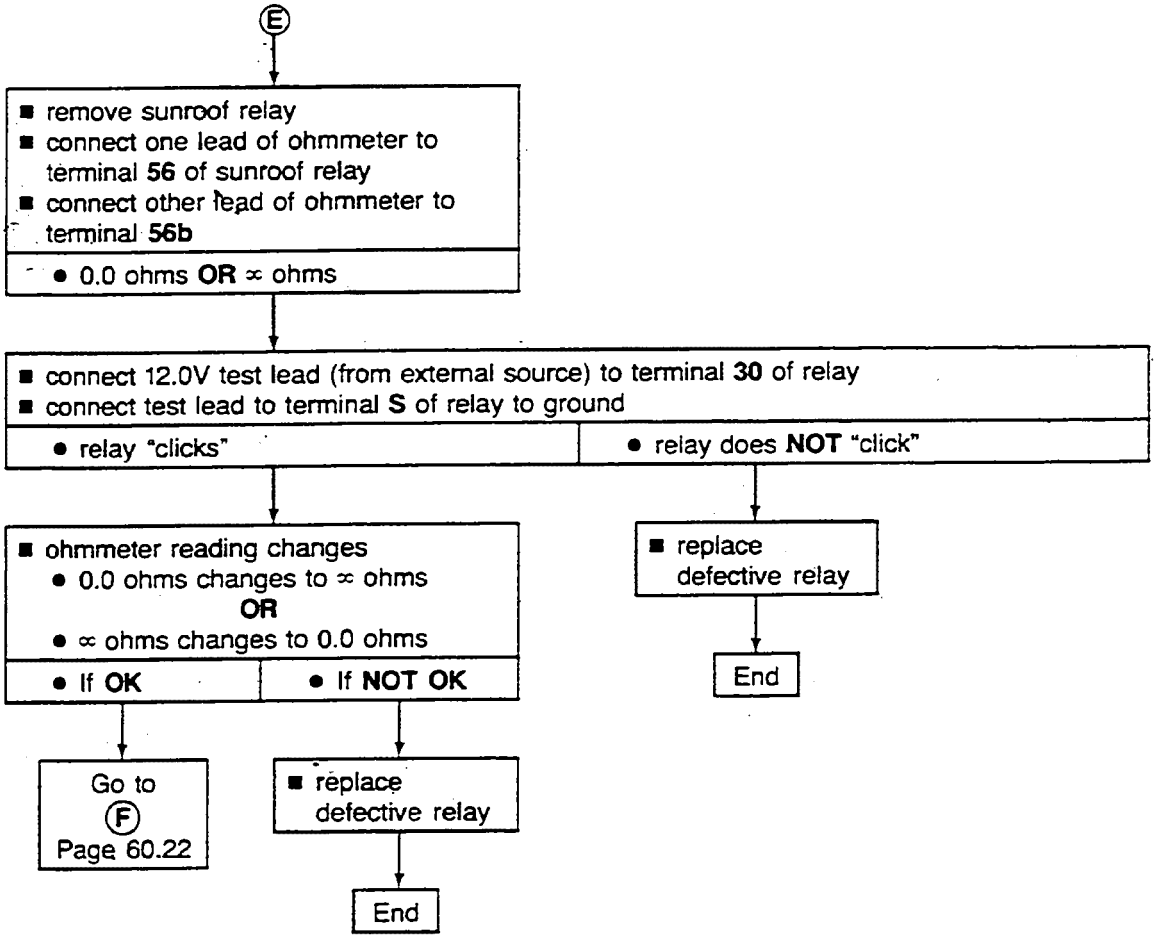

cardiagn.com

Microswitches and wiring harness, replacing

Ⓖ

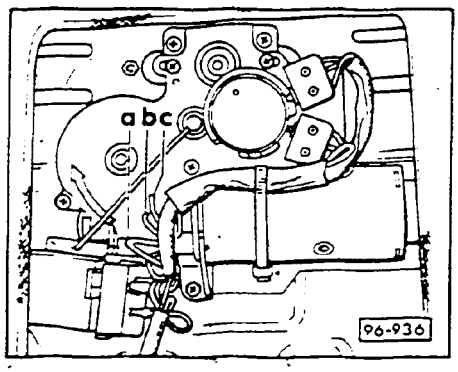

CAUTION

When installing white microswitch
- use two M2 x 16 mm bolts

When installing blue microswitch
- use two M2 x 12 mm bolts

If sunroof switch, sunroof relay and sunroof motor work properly
- replace microswitches and microswitch wiring harness Part No. 443 998 003
- drill out microswitch mounting rivets with 3 mm drill
- remove wires from solder joints **a**, **b**, **c** on sunroof motor
- install microswitches
- solder wires **a**, **b**, **c**, to motor in order
- fasten wires with tie wrap to keep them away from drive gear

cardiagn.com

Index

Coupe

Cable parallelism
- adjusting 60.29

Guide w/ lift channel
- removing 60.29

Rear guide w/ cable
- removing 60.29

Sunroof
- assembly 60.23
- frame assembly 60.24
- troubleshooting 60.32

Sunroof headliner
- installing 60.27
- removing 60.26

Sunroof lid
- adjusting 60.30
- installing 60.26
- removing 60.25
- seal, replacing 60.25

Sunroof motor
- adjusting 60.28
- removing/installing 60.28

Water drain hoses
- front, cleaning 60.31
- rear, cleaning 60.31

Coupe w/Power Glass Sunroof

Cable parallelism
- adjusting 60.48

Cable with lift channel
- removing 60.47

Guide plate
- checking 60.42

Rear guide with cable
- removing 60.47

Sunroof
- assembly 60.39
- frame 60.44
- troubleshooting 60.51

Sunroof headliner
- removing/installing 60.44

Sunroof motor
- adjusting 60.46
- removing/installing 60.46

Sunroof panel
- adjusting 60.48
- assembly 60.39
- removing/installing 60.43
- seal, replacing 60.49

Water drain hose
- cleaning 60.50

cardiagn.com

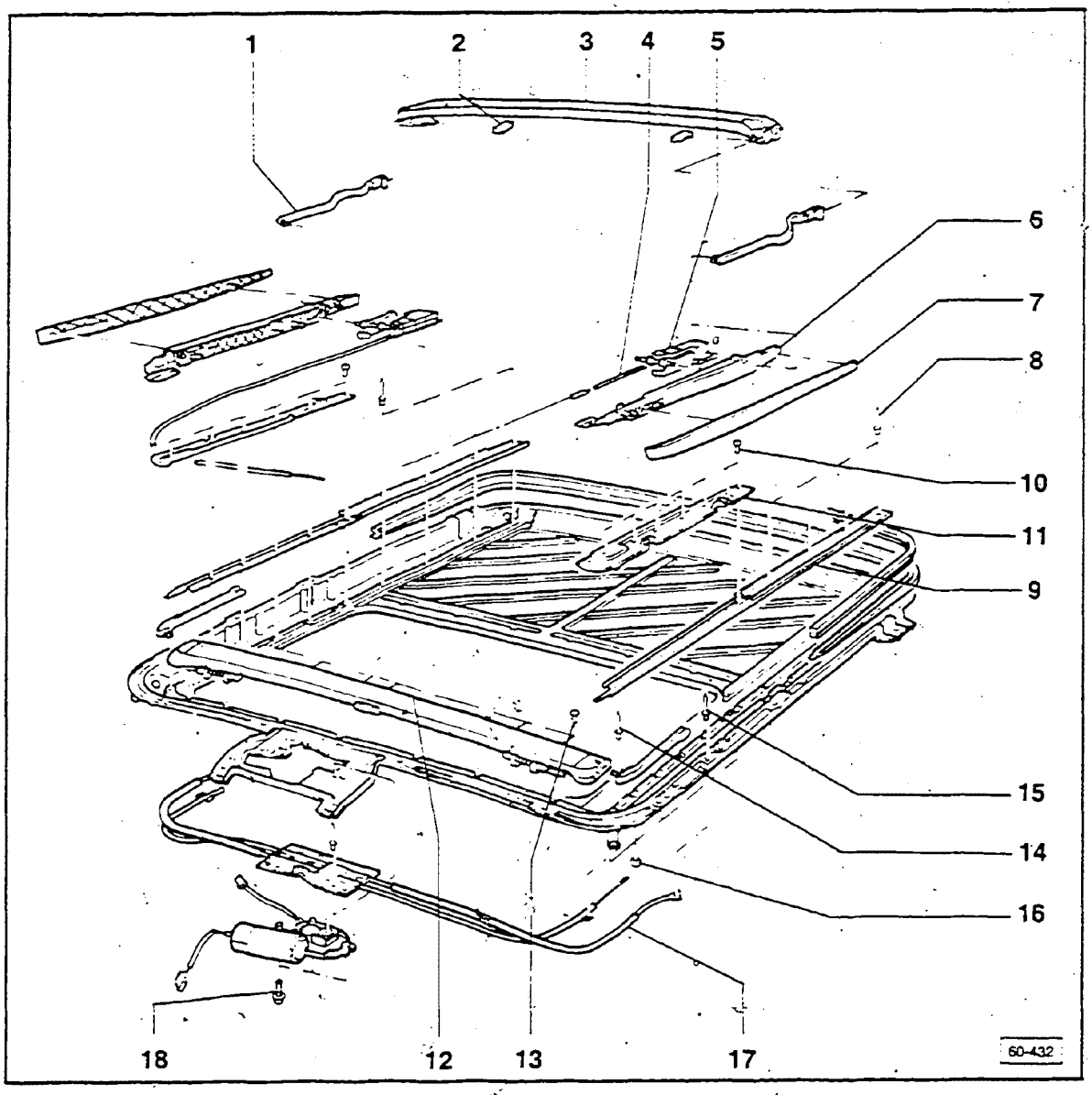

1 — **Connector rod**

2 — **Slide (2x)**

3 — **Rear water drain tray**
remove guide with lift channel before removing drain tray

4 — **Cable**

5 — **Rear guide with cable**
removing, 60.29

6 — **Guide with lift channel**
removing, 60.29

7 — **Side cover**
to adjust, loosen retaining screws and push side cover tight against lid seal, re-tighten screws

8 — **Hollow rivets**

9 — **Guide channel**
riveted in place
remove frame and drill out rivets to remove

10 — **Countersunk screws (7x)**

11 — **Guide cover**

12 — **Wind deflector**
unhook lifter arm before removing

13 — **Countersunk screw**

14 — **Hollow rivet**

15 — **Hollow rivet**

16 — **Nut**

17 — **Cable guide tubes**
drill out rivets to remove

18 — **Screw with washer (3x)**

cardiagn.com

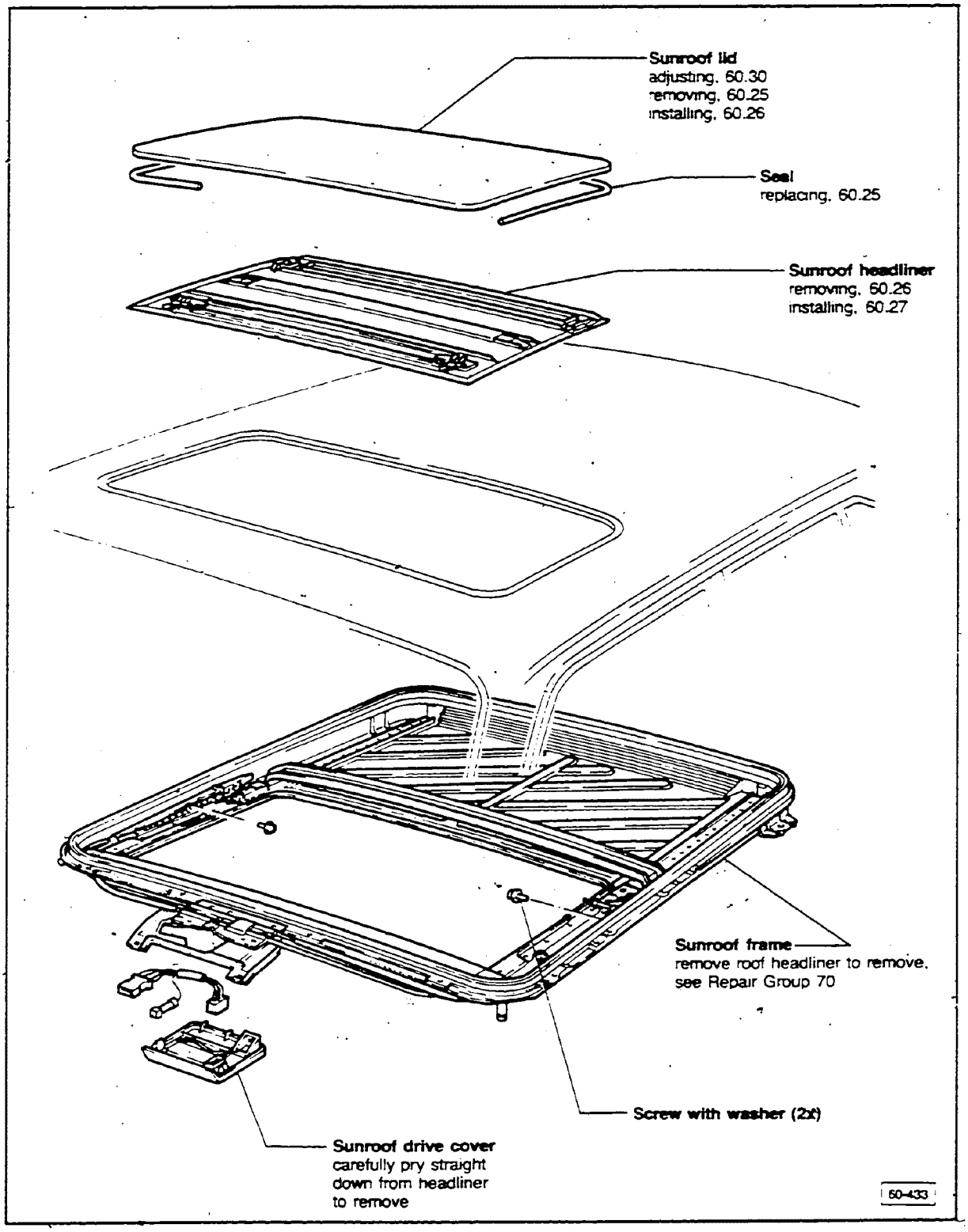

cardiagn.com

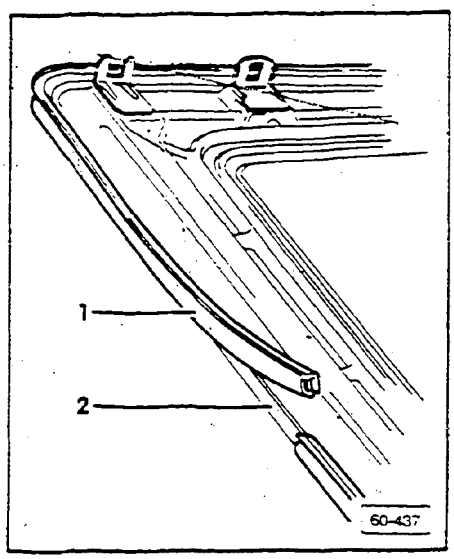

Sunroof lid seal, replacing

- remove sunroof lid
- pull off seal **1** and remove adhesive residue from flange **2**
- apply seal adhesive (commercially available) to inner lip of flange **2**
- install seal **1** and cut off excess so that seal ends butt together

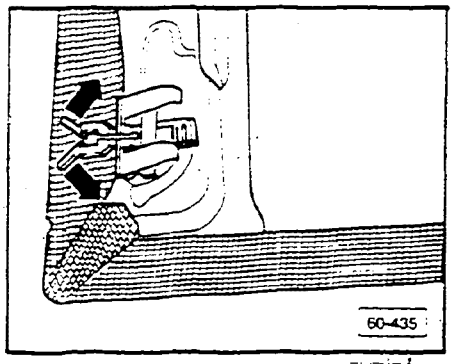

Sunroof lid, removing

- open sunroof rearward approximately 10 cm (4.0 in.)
- spread both sunroof headliner retaining clips (located on top front side of sunroof headliner) in direction indicated (**arrows**) and disengage sunroof headliner
- slide headliner rearward far enough to expose sunroof lid retaining screws
- close sunroof

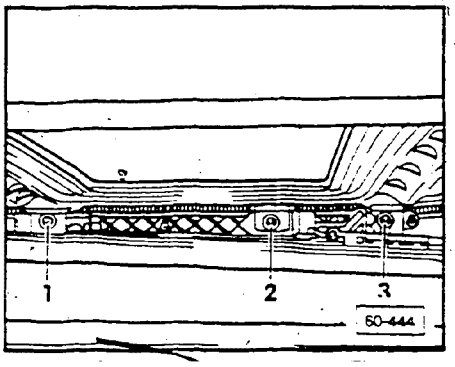

- remove lid retaining screws **2** (left and right side)
- loosen screws **1** and **3** on both sides

cardiagn.com

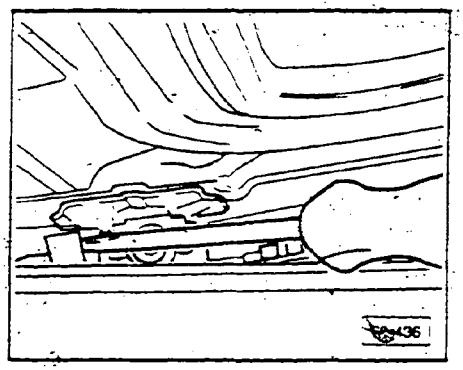

- release lid retaining clips (left and right side) with a screwdriver
- lift out sunroof lid from top

Sunroof lid, installing

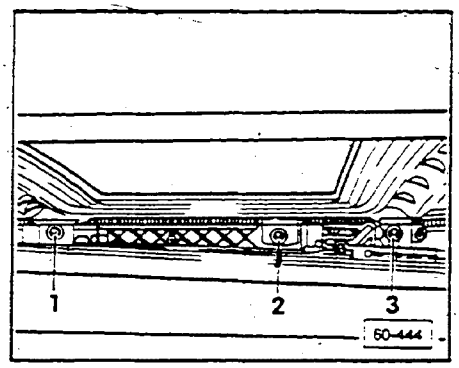

- lower sunroof lid through opening onto guides and engage lid retaining clips
- insert sunroof lid retaining screws **1**, **2**, and **3** on both sides
- adjust sunroof lid to proper height, 60.30
- tighten sunroof lid retaining screws
- install sunroof headliner, 60.27

Sunroof headliner, removing

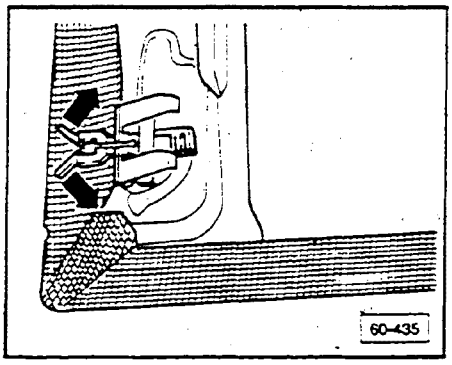

- open sunroof rearward approximately 10 cm (4.0 in.)
- spread both sunroof headliner retaining clips (located on top front side of sunroof headliner) in direction indicated (**arrows**) and disengage sunroof headliner
- push sunroof headliner partially rearward

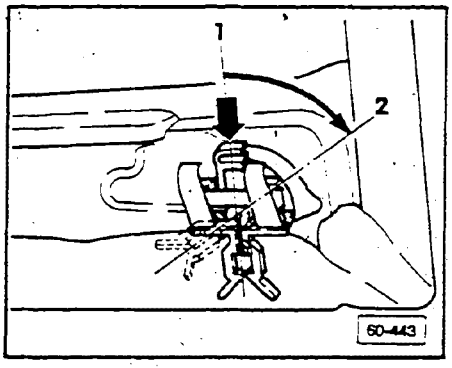

- push release tab (**arrow**) and turn clips 45° to position **2**
- close sunroof then open to tilt position
- push sunroof headliner forward as far as possible
- lift sunroof headliner over rear water drain tray and remove through rear of sunroof opening

cardiagn.com

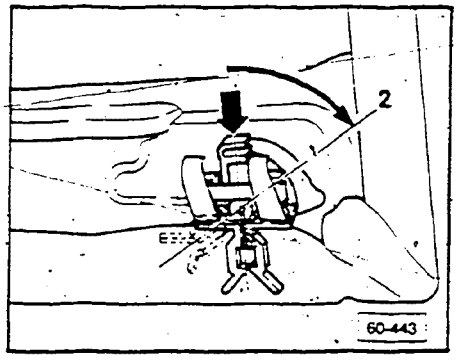

Sunroof headliner, installing

- open sunroof to tilt position
- turn sunroof headliner retaining clips (left and right side) 45° to position **2**

> **CAUTION**
>
> **ALWAYS** turn headliner retaining clips to position **2** before installing the sunroof headliner.

- guide sunroof headliner through rear of sunroof opening and slide forward as far as possible
- push rear of sunroof headliner over rear water drain tray
- slide sunroof headliner rearward approximately half way and turn retaining clips back to original position **1**

- close sunroof
- push sunroof headliner forward until retaining clips engage

> **CAUTION**
>
> Sunroof lid **MUST** be closed when pushing sunroof headliner forward to ensure proper engagement of the rear headliner tilt pins.

cardiagn.com

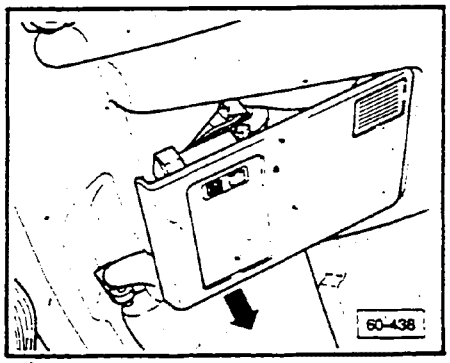

Sunroof motor, removing/installing

- close sunroof
- carefully pry sunroof drive cover straight down (**arrow**) starting with front edge
- remove electrical connections and remove cover

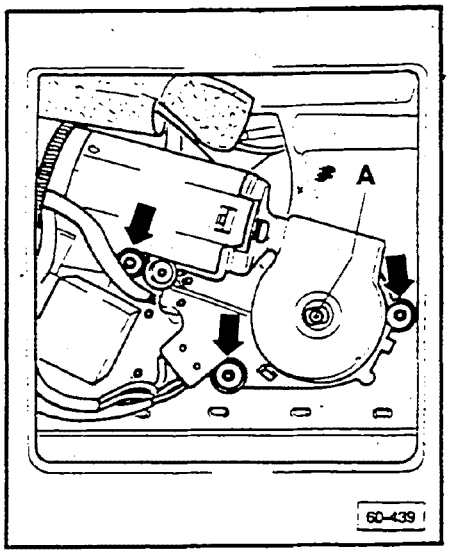

- remove bolts (**arrows**) and remove sunroof motor
- install in reverse order of removal

> **CAUTION**
>
> **ALWAYS** adjust sunroof motor to "0" position before installing. Install sunroof motor with sunroof lid closed.

Sunroof motor, adjusting

Adjust sunroof motor to "0" position as follows:

- insert a 4 mm allen wrench into manual adjustment hole **A** on bottom of motor drive housing

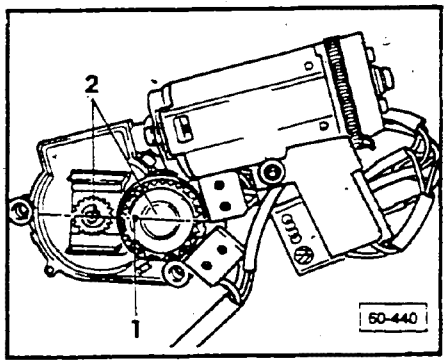

- turn allen wrench (gear) until hole **1** lines up with center of both gears **2**

cardiagn.com

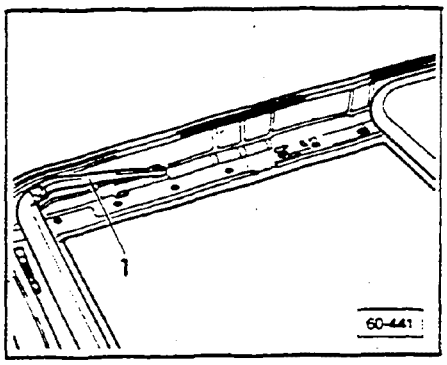

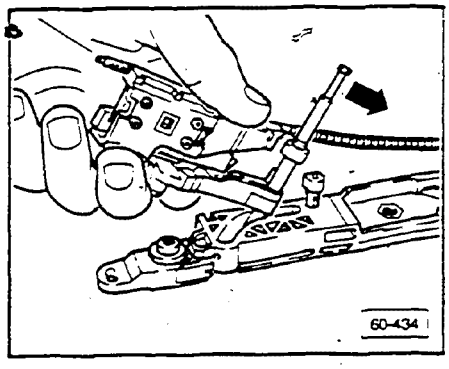

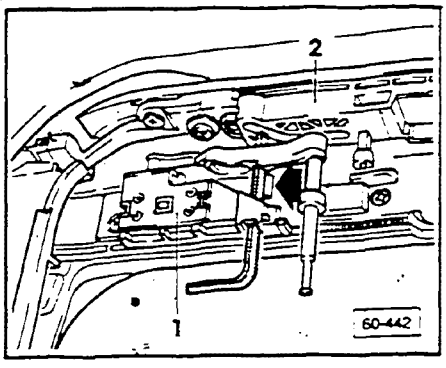

Guide with lift channel and rear guide with cable, removing

- remove sunroof lid, 60.25
- push sunroof guides (left and right side) evenly to rear of guide channels
- unhook lifter arms **1** from sunroof frame
- remove screws and lift out guide covers
- slide guides forward and lift from guide channels
- detach connector rods from rear water drain tray
- remove guides with cables and slide out cables from cable guide tubes

To remove rear guide with cable from guide with lift channel:

- center rear guide in slot of lift channel
- pull rear guide up while twisting in direction indicated (**arrow**)
- to install, place rear guide in center of slot and tap lightly with a hammer to seat

Cable parallelism, adjusting

To adjust cable parallelism, the sunroof lid must be removed.

- remove sunroof lid, 60.25
- remove sunroof headliner, 60.26
- remove sunroof motor, 60.28
- detach connector rods from rear water drain tray
- push guides with lift channel (left and right side) from front to back
- insert a 4 mm allen wrench through rear guide with cable **1**, through alignment notches in guide channel (**arrow**) and into guide with lift channel **2** (left and right side)

cardiagn.com

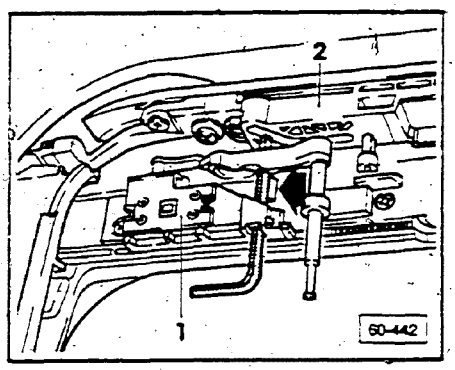

- push rear guide with cable **1** and guide with lift channel **2** rearward (with allen wrench installed) until tight against stop (left and right side)
- install sunroof motor, 60.28

> **CAUTION**
>
> Adjust sunroof motor to "**0**" position before installing, 60.28.

- remove 4 mm allen wrench from guides on both sides
- re-connect connector rods (left and right side) to rear water drain tray
- re-install sunroof headliner and sunroof lid

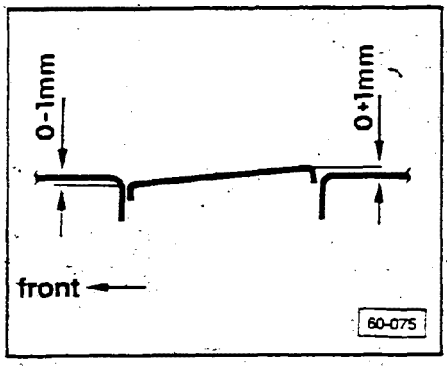

Sunroof lid, adjusting

Adjust front of sunroof lid lower than roof line and back of sunroof lid higher than roof line to prevent wind noise.

Front height

- loosen screws **1** and **2** and adjust front height according to illustration 60-075
  - must be 0-1 mm below roof line

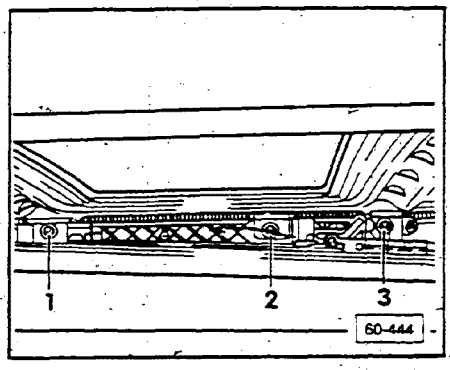

Rear height

- loosen screws **2** and **3** and adjust rear height according to illustration 60-075
  - must be 0-1 mm above roof line

cardiagn.com

Front water drain hoses, cleaning

Front water drain hoses are routed through the A-pillars and discharge above the front door lower hinges.

- clean front drain hoses through sunroof opening

Note

For cleaning front hoses, it is recommended that an auxiliary tool be used — for example a 230 cm (90.5 in.) long probe made from the cores of speedometer cables.

Rear water drain hoses, cleaning

Rear water drain hoses are routed through the C-pillars and discharge into the water drain channel underneath the rear hatch.

- clean rear drain hoses from discharge end after opening hatch
- carefully blow compressed air through outlet end of hose to clean

cardiagn.com

THIS FRAME INTENTIONALLY LEFT

BLANK

cardiagn.com

Sunroof, troubleshooting

Electrical

Note

Refer always to the appropriate wiring diagram.

Test conditions

- interior light, sunroof motor cover removed
- fuse for sunroof motor **OK**
- battery **OK**

Tools required

- multimeter **US 1119**

cardiagn.com

Sunroof switch, checking

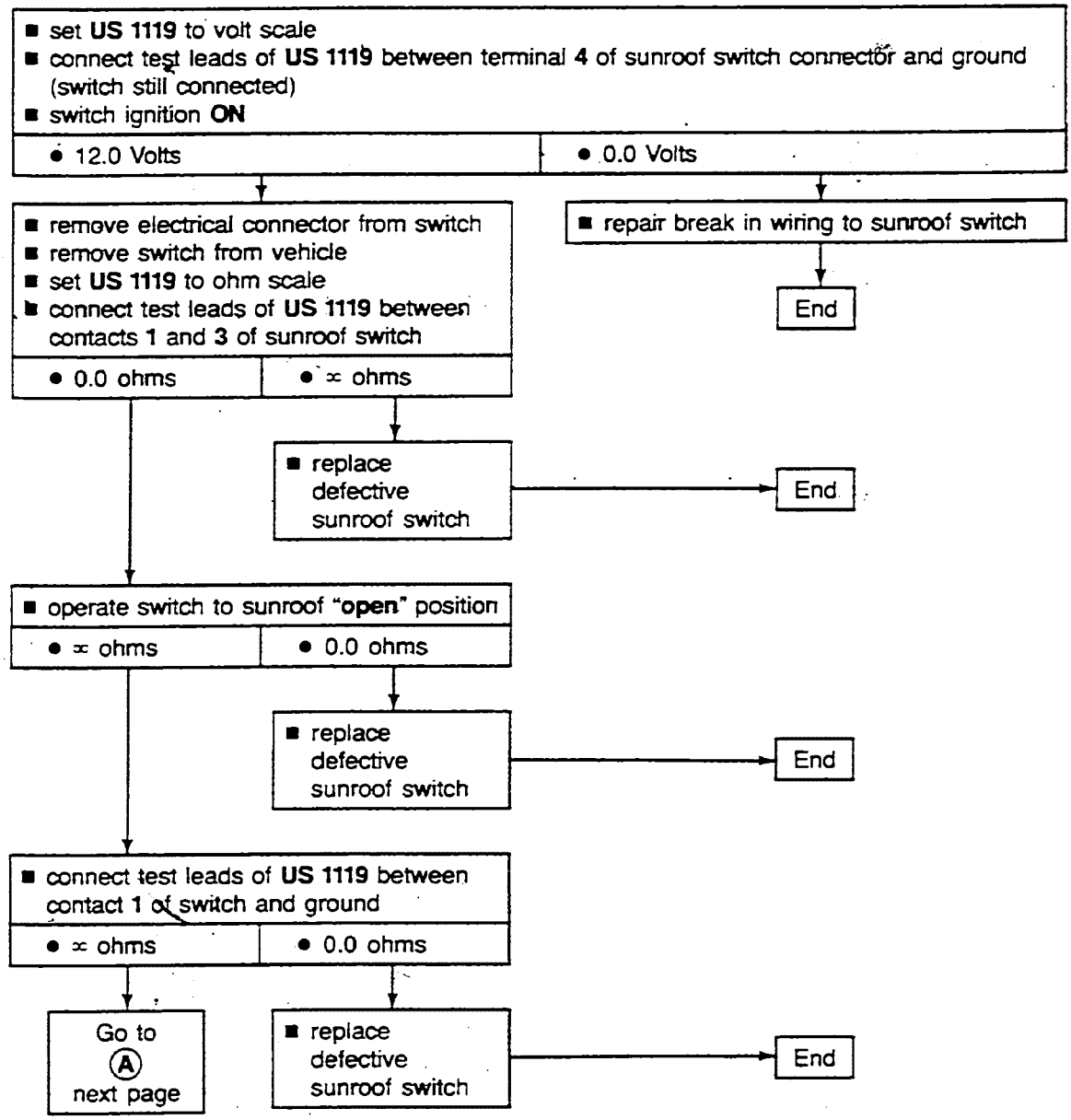

cardiagn.com

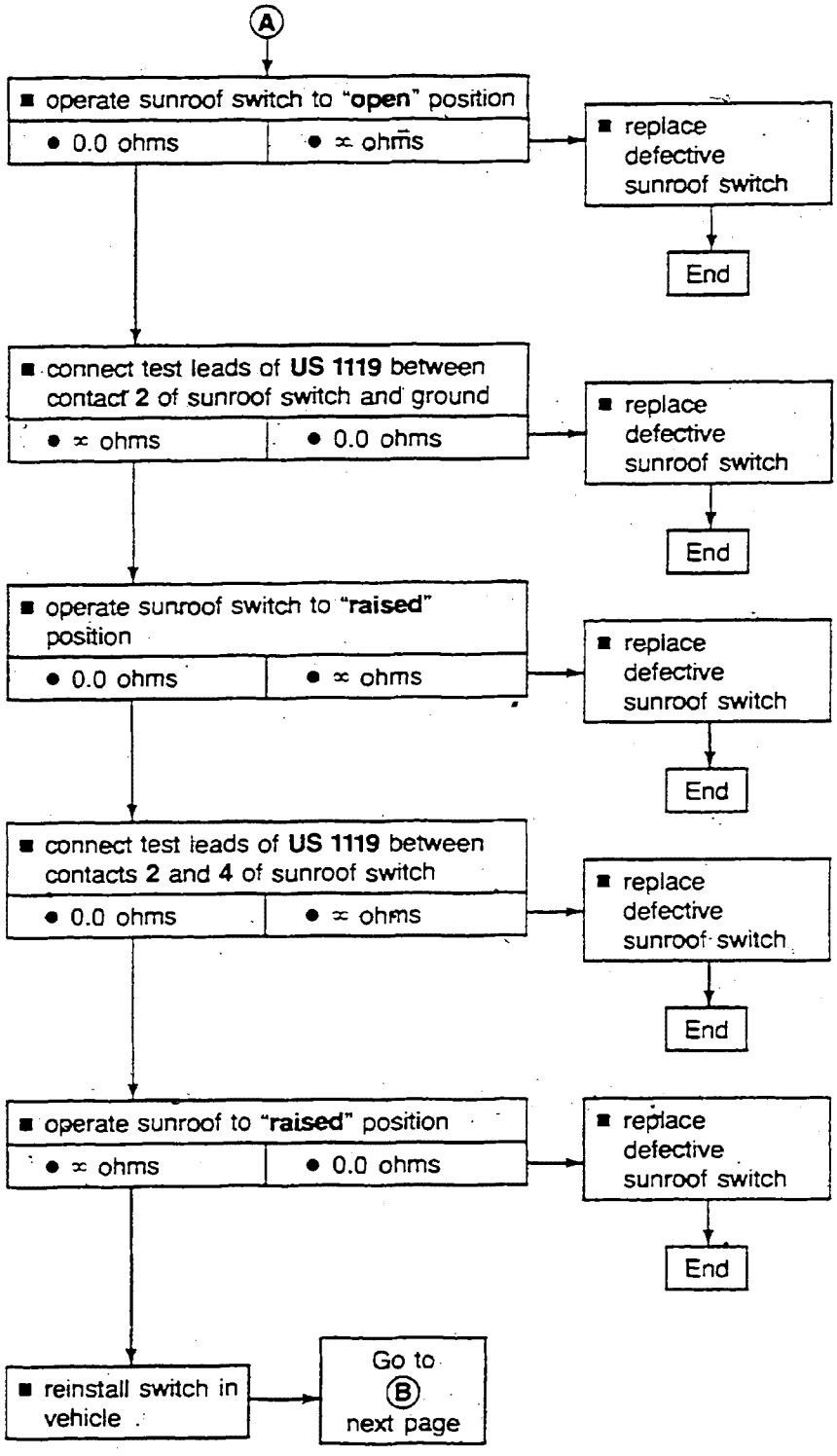

cardiagn.com

Sunroof relay, checking

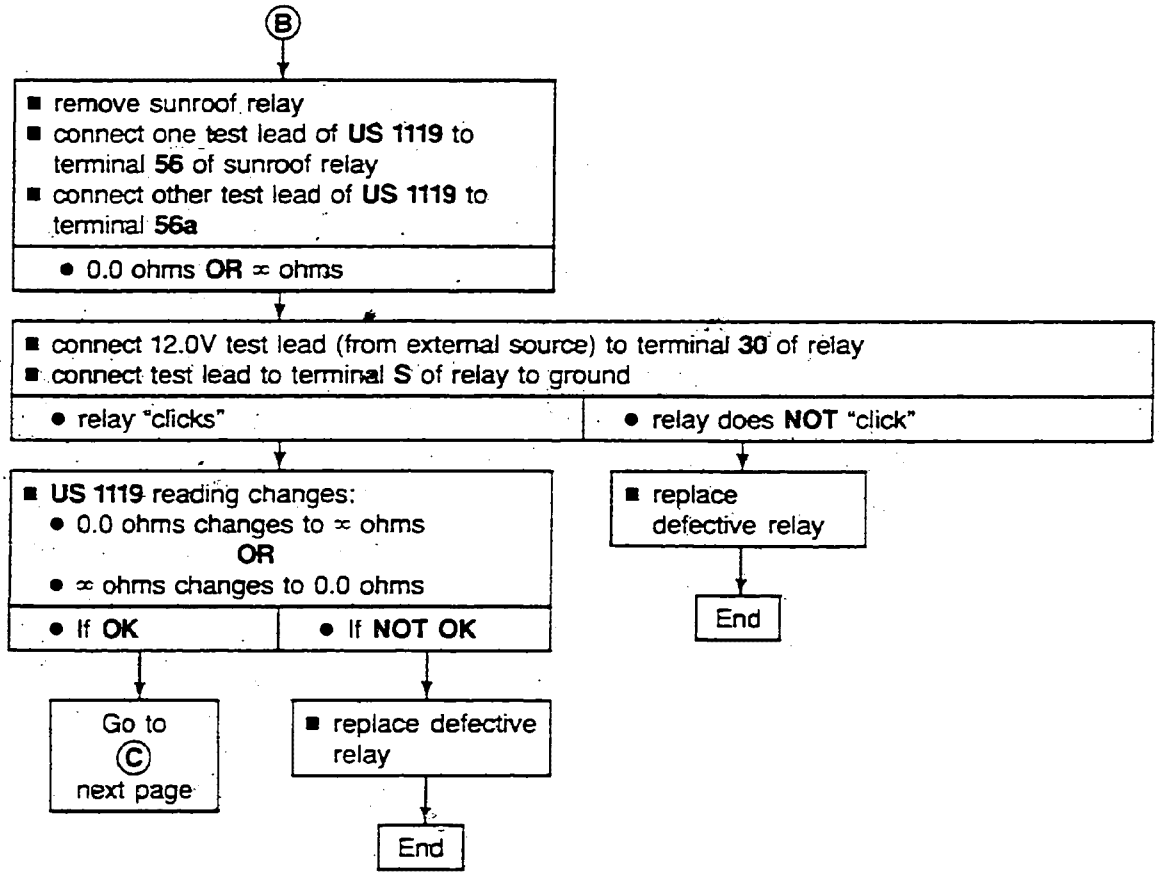

cardiagn.com

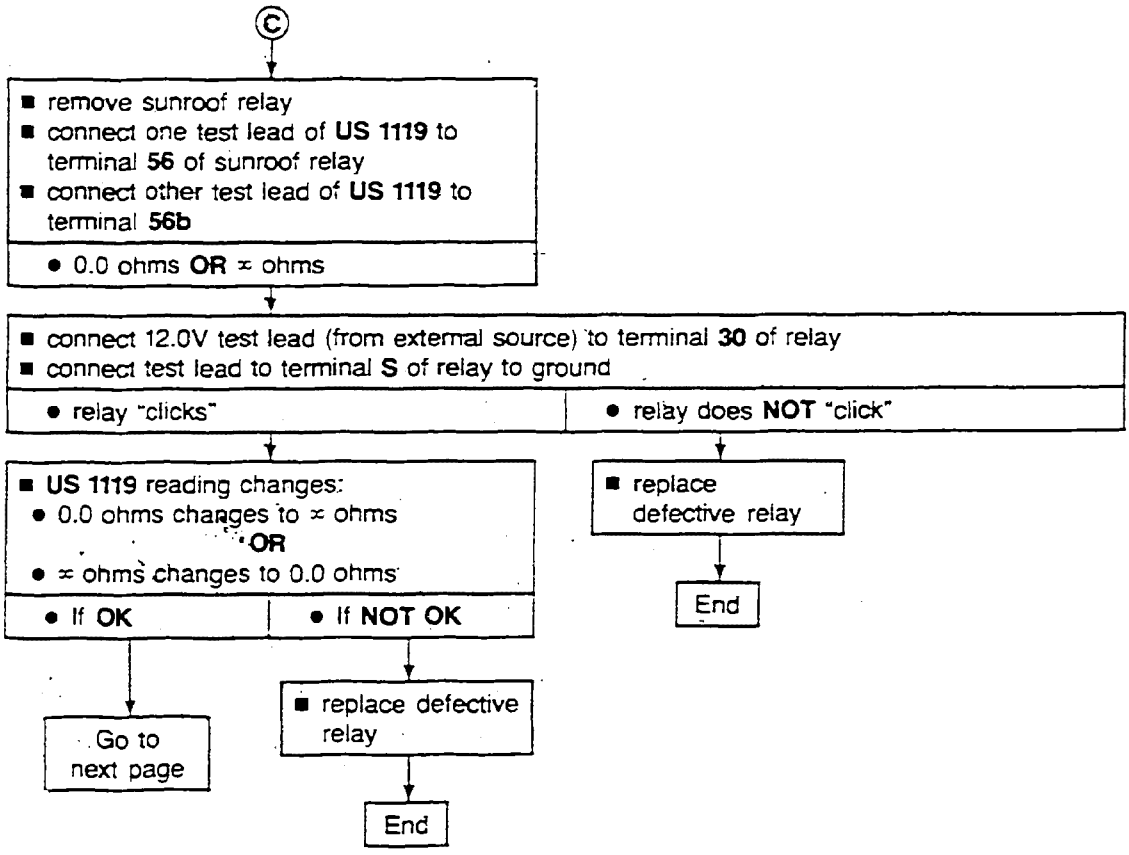

cardiagn.com

Sunroof motor, checking

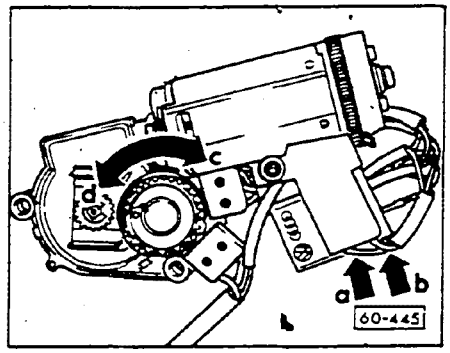

- remove sunroof relay
- remove sunroof motor

using 12.0 V external power supply:

- connect negative (−) lead of power supply to motor terminal **a**
  - blue wire
- connect positive (+) lead of power supply to motor terminal **b**
  - violet/black/brown wire

motor runs clockwise (**c**)	motor **does not** run clockwise (**c**)
	■ replace defective motor → End

- connect positive (+) lead of power supply to motor terminal **a**
  - blue wire
- connect negative (−) lead of power supply to motor terminal **b**
- violet/black/brown wire

motor runs counterclockwise (**d**)	motor **does not** run counter-clockwise (**d**)
Go to next page	■ replace defective motor → End

cardiagn.com

Microswitches/wiring harness, replacing

If sunroof switch, sunroof relay and sunroof motor work properly:

> **CAUTION**
>
> Part numbers are for reference only. Always check with your Parts Department for latest information.

- replace microswitches and microswitch wiring harness, Part No. 895 998 003
- drill out four microswitch mounting rivets with 3 mm (approximately 1/8 in.) drill
- install microswitches
- secure wires with tie wrap to keep them from touching drive gear

> **CAUTION**
>
> When installing white microswitch:
>
> - use two M2 x 16 mm bolts
>
> When installing blue microswitch:
>
> - use two M2 x 12 mm bolts

cardiagn.com

CONTINUED IN THE

BEGINNING OF NEXT ROW

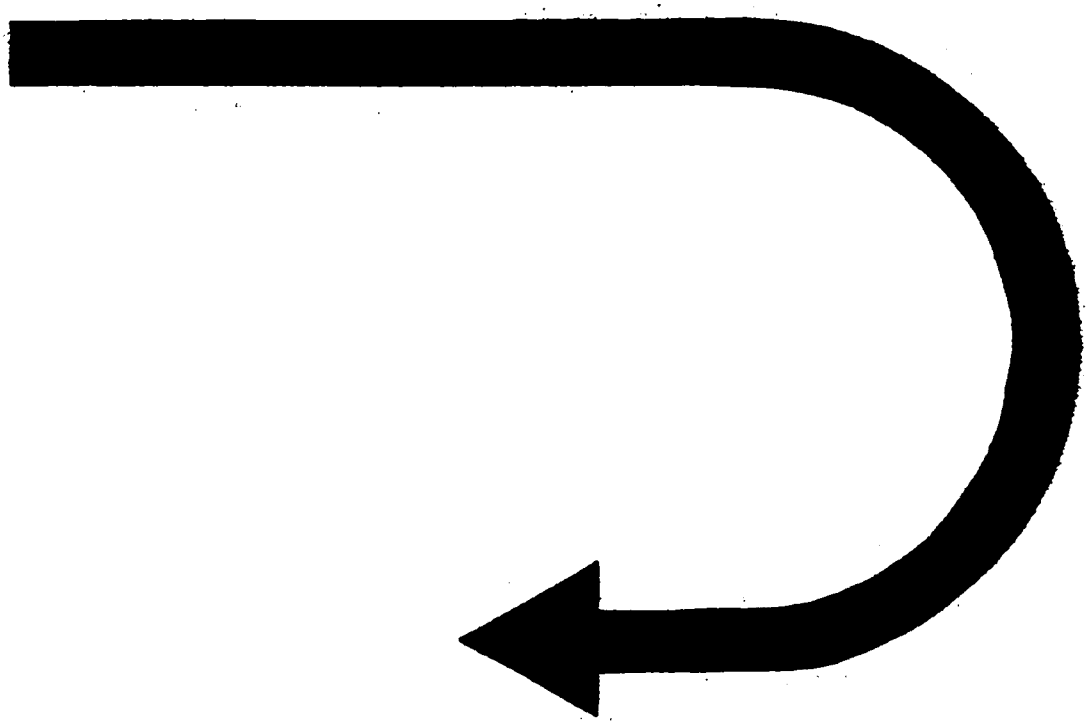

cardiagn.com

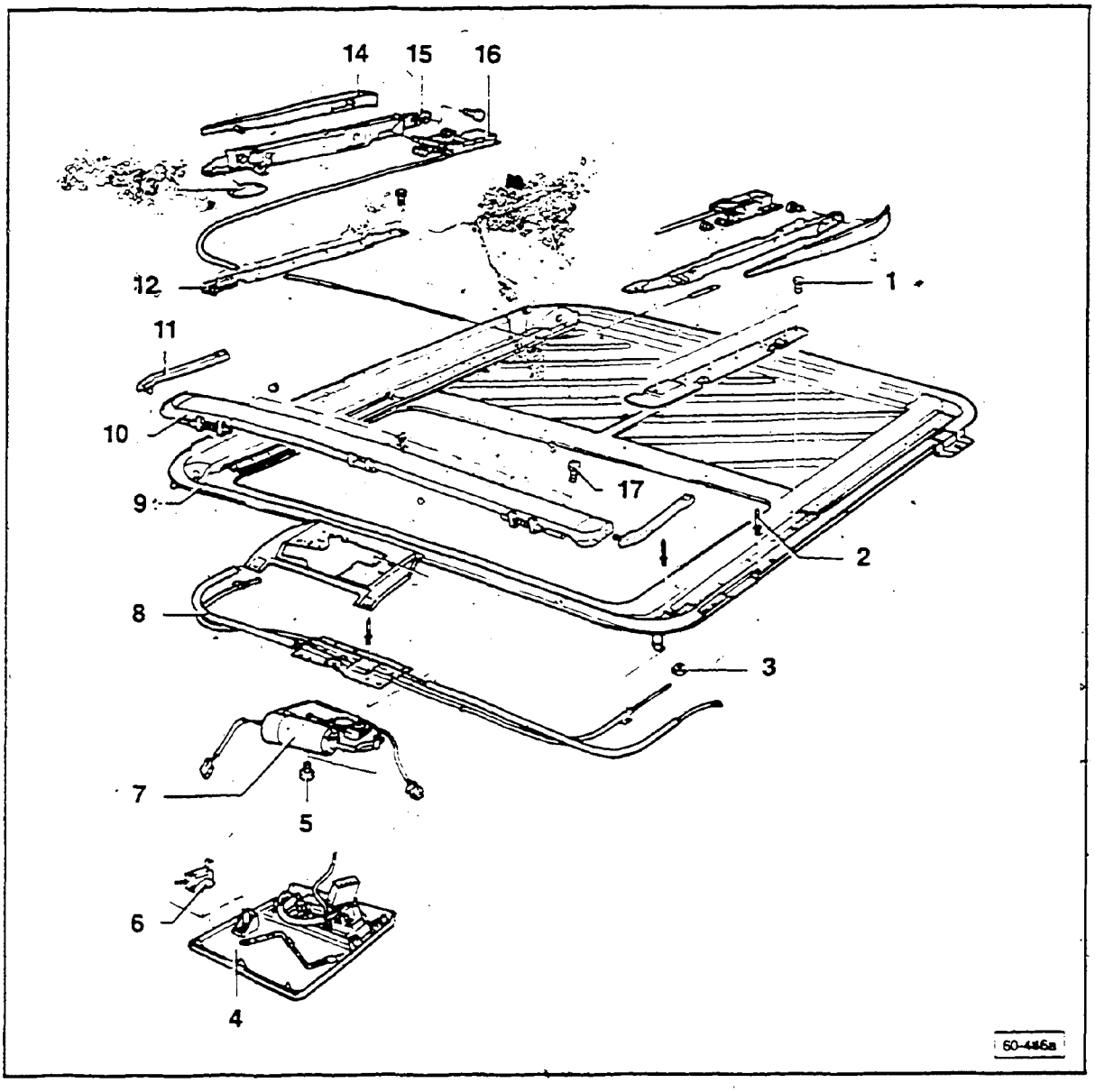

1 — **Screw**

2 — **Pop-rivet**
drill out to remove cable guide tubes

3 — **Nut**

4 — **Sunroof drive cover**
with automatic preselector switch

5 — **Bolt w/washer — 2.0-3.0 Nm (17.7-26.6 in. lb)**

6 — **Temperature sensor**

7 — **Sunroof motor w/automatic preselector**
- removing/installing, page 60.46
- checking "0" position

8 — **Cable guide tube**
drill out rivets 2 to remove

9 — **Sunroof frame**
remove headliner panel first

10 — **Wind deflector**
remove tilt linkage 11 first, then remove screws 17

11 — **Tilt linkage**

12 — **Guide channel**

13 — **Slide**

cardiagn.com

14 — **Side cover**
to adjust, tilt up sunroof panel, press side cover upwards to make contact with roof panel seal and tighten screws

15 — **Guide with lift channel**
removing, page 60.47

16 — **Rear guide with cable**
- removing, remove sunroof panel and guide with channel
- removing rear guide from guide plate, page 60.47

17 — **Screw**

cardiagn.com

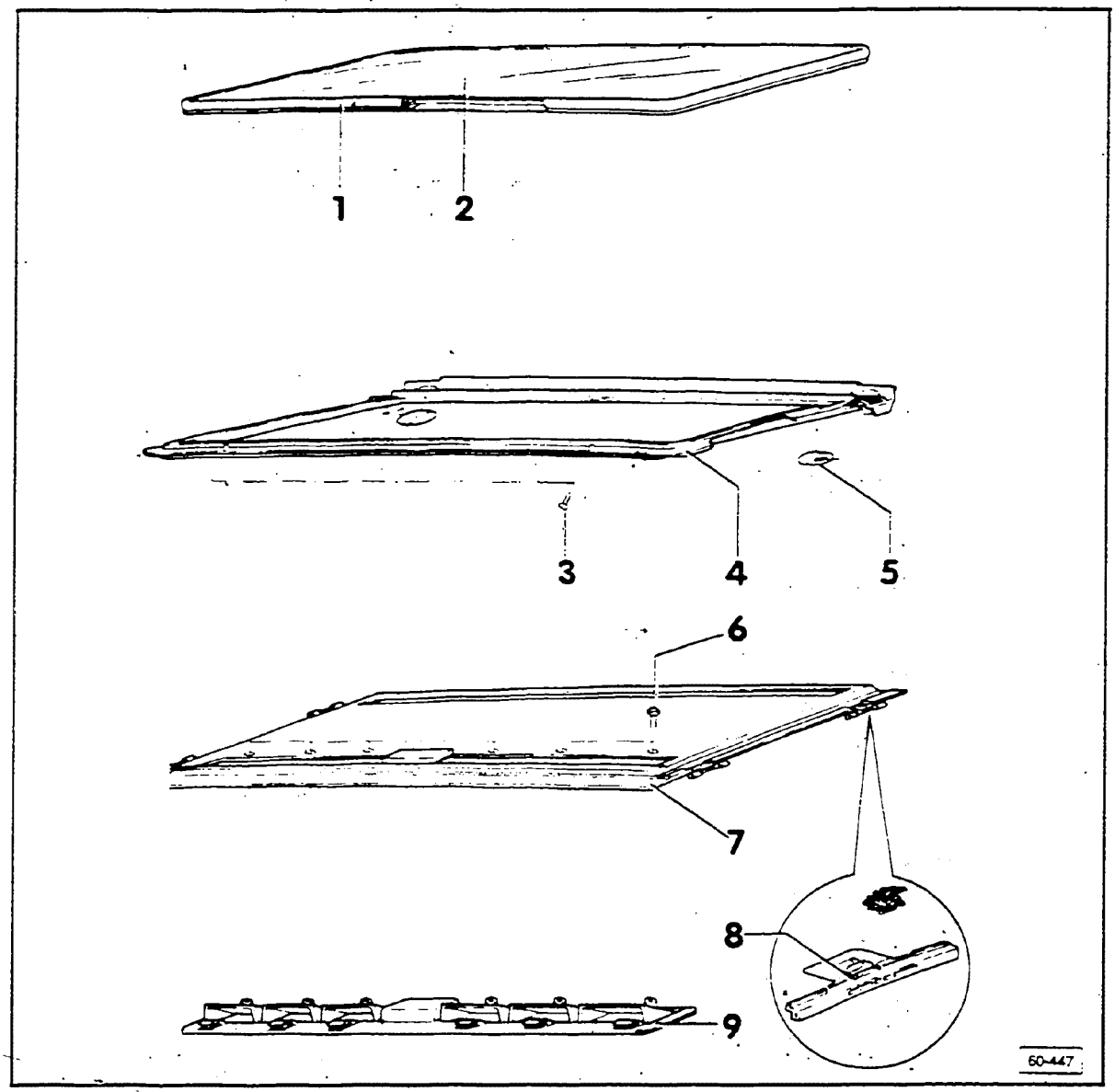

1 — **Seal**
- installing, page 60.49
- pull seal from roof panel to remove

2 — **Sunroof panel**
removing/installing, page 60.43

3 — **Screw** 1.0 Nm (8.9 in. lb)

4 — **Sunroof frame**
removing/installing, page 60.44

5 — **Slide**

6 — **Screw**

7 — **Sunroof headliner**

8 — **Slide**

9 — **Molding**
remove before taking off sunroof panel

cardiagn.com

Guide plate "0" position, checking

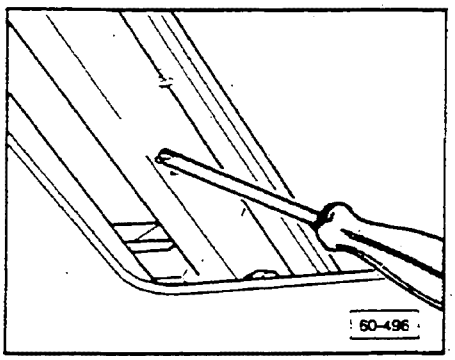

- open sunroof
- remove trim frame screws (as shown).
- tilt sunroof up at rear
- push trim frame, sunroof headliner to rear until aligning hole for "0" position is visible in the guide rails for headliner.
- close sunroof

CAUTION

Do not open sunroof with trim frame pushed back. Trim frame and glass panel will be damaged.

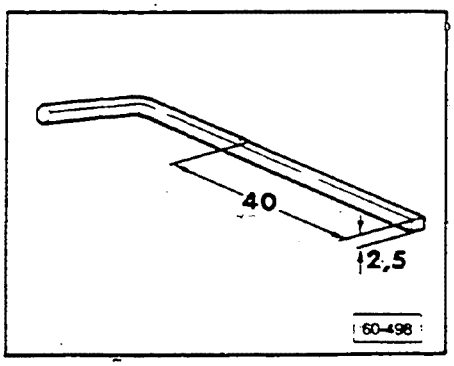

- modify 4.0 mm allen wrench, as shown
  - wrench supplied for emergency sunroof operation may also be used for checking "0" position

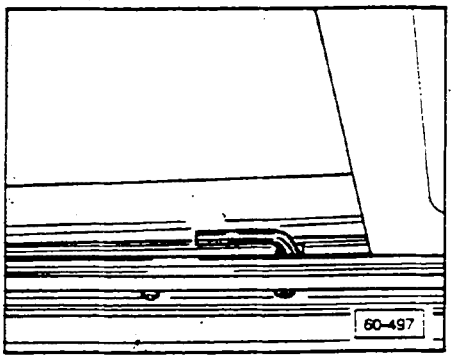

- insert wrench (modified) through hole in guide rail to check "0" position
- wrench must be inserted between the markings on guide rail through rear guide and into guide plate

cardiagn.com

Sunroof panel, removing/installing

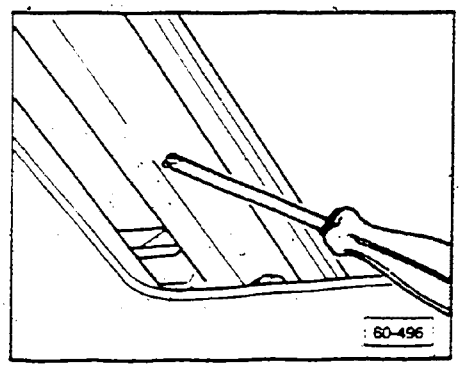

Removing

- open sunroof half way
- remove trim frame screws (as shown)

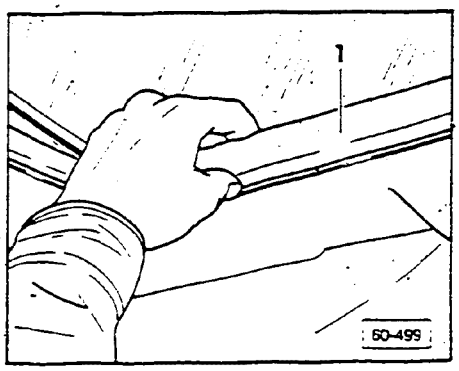

- tilt sunroof up at rear, pull back trim frame **1**

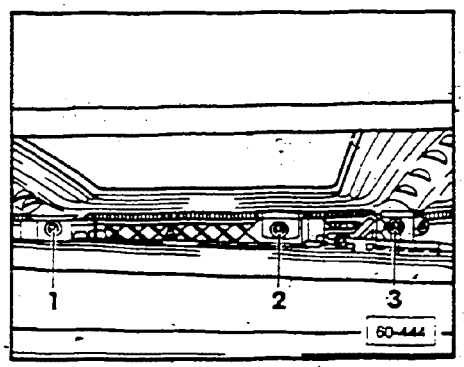

- remove tilt mechanism screws **2** from both sides
- loosen, but do not remove, screws **1**, **3**

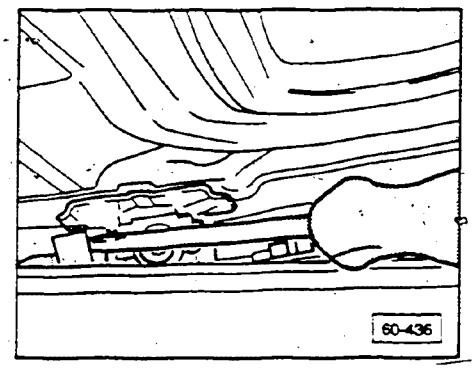

- open retaining clips (left/right sides) with screwdriver
- lift out sunroof panel

Installing

Reinstall in reverse order of removal, noting the following:

cardiagn.com

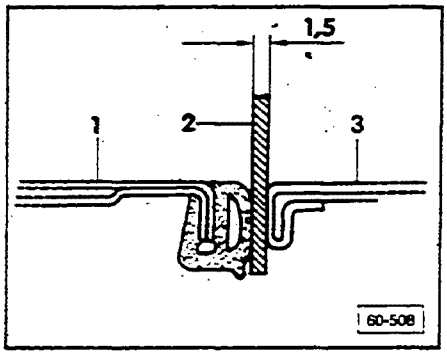

Sunroof panel 1 is pretensioned against front roof edge to prevent leaks.

- insert plastic strip 2 between rear roof edge 3 and panel 1
- strip width of panel, 1.5 mm (1/16 in.) thick
- reinstall sunroof panel
- slightly tighten retaining screws
- adjust panel height, fully tighten retaining screws

Sunroof headliner, removing/installing

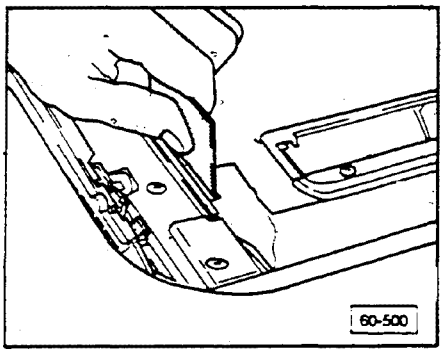

Removing

- remove sunroof panel
- push retaining clips inward (as shown) with strip of metal or similar tool
- lift out sunroof headliner

Installing

- insert sunroof headliner into guide rail on one side, while pressing retaining clip toward guide rail on opposite side

Sunroof trim frame, removing/installing

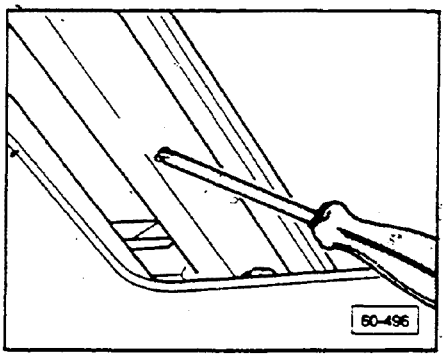

Removing

- open sunroof half way
- remove trim frame screws
- tilt sunroof up at rear

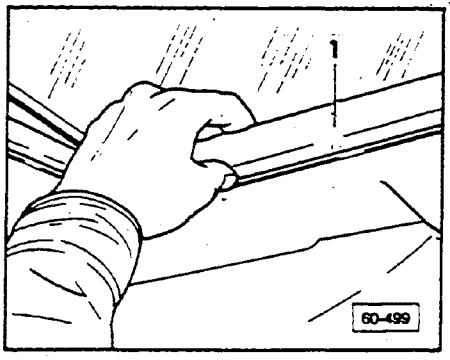

- pull back trim frame 1

cardiagn.com

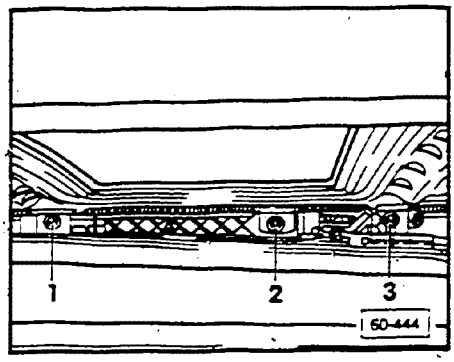

- remove screws **2** from tilt mechanism from both sides
- loosen, but do not remove, screws **1**, **3**

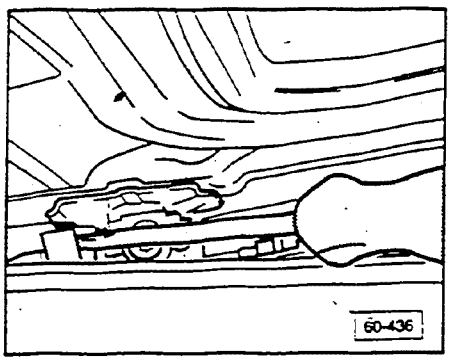

- open retaining clips (left/right sides) with screwdriver
- lift out sunroof panel from top

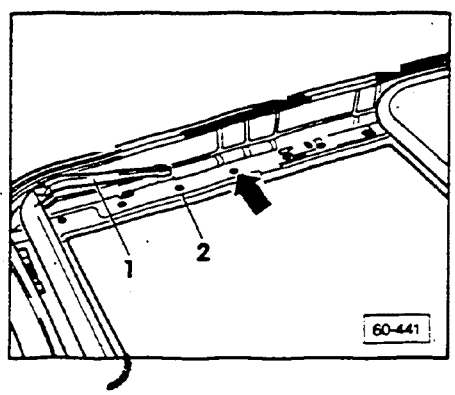

- unhook tilt linkage **1**
- remove guide with lift channel from side section
- remove screws (**arrow**) and take off guide **2**

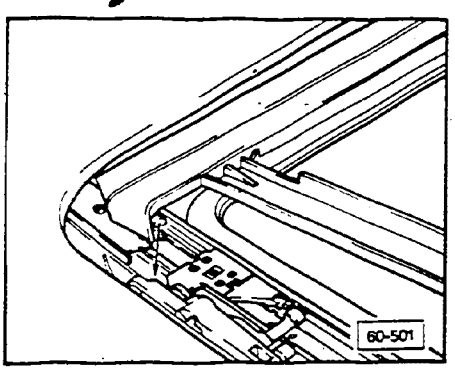

- remove motor, cable drive
- pull trim frame toward front, lift from guide rail

Installing

Reinstall all components in reverse order of removal.

cardiagn.com

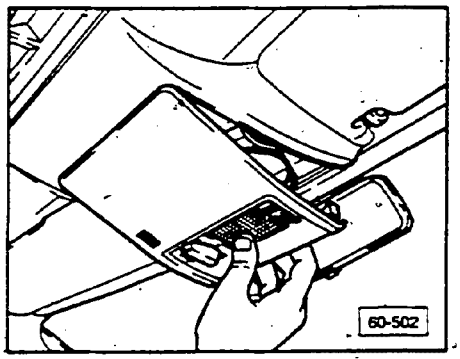

Sunroof motor, removing/installing

Removing

- close sunroof
- carefully pry sunroof drive cover off
- remove electrical connections
- remove cover

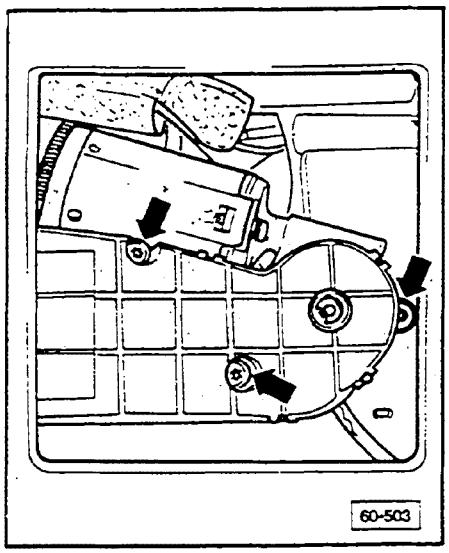

- remove screws (**arrows**), take out sunroof motor

Installing

Reinstall sunroof motor in reverse order of removal, noting the following:

> **CAUTION**
>
> Always adjust sunroof motor to "0" position before reinstalling. Install motor with sunroof panel closed.

- torque sunroof motor screws 2-3 Nm (18-27 in. lb)

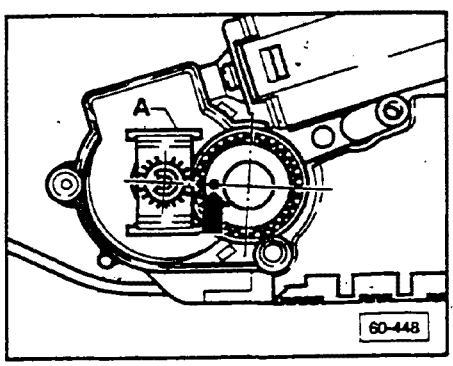

Sunroof motor, checking/adjusting

Checking

- remove motor, do not disconnect
- turn sunroof motor switch to "0" position
  - motor will automatically run to "0" position, and microswitch will switch off
- hole (**arrow**) must be in line between the two center points

cardiagn.com

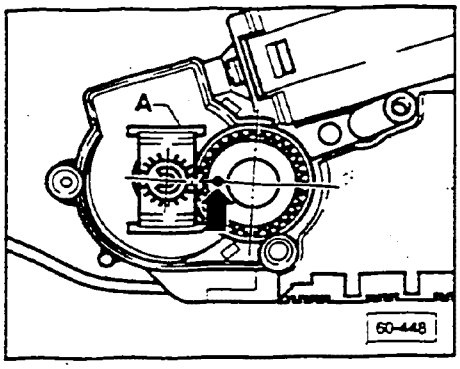

Adjusting

- insert wrench supplied with vehicle for sunroof into center of gear **A**
- turn until alignment is attained

Note

Moving gear may be difficult. Do not use excessive force.

Guide with lift channel, removing/installing

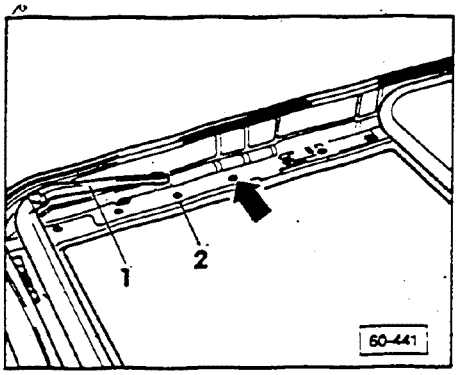

Removing

- remove sunroof panel
- remove sunroof motor
- push sunroof guides (left/right) evenly to rear of guide channels
- unhook lifter arms **1** from sunroof frame
- remove screws (**arrows**)
- lift out guide covers
- slide guides forward and lift from guide channels
- remove guides **2** with cables

Installing

Reinstall all components in reverse order.

Rear guide with cable, removing/installing

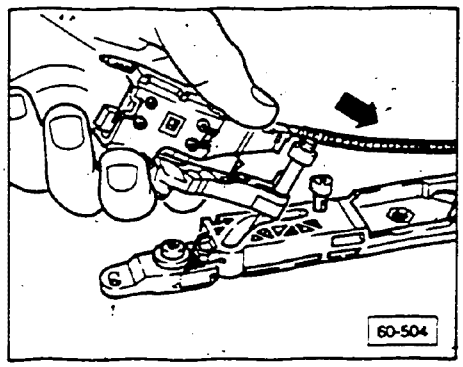

Removing

- center rear guide in slot of lift channel
- pull rear guide up while twisting (**arrow**)

Installing

Reinstall in reverse order of removal, noting the following:

- place rear guide in center of slot and tap lightly with hammer to seat

Cable parallelism, adjusting

- remove sunroof panel
- remove sunroof panel headliner
- remove sunroof motor
- disconnect connector rods to water drains
- push guides with lift channel (left/right sides) from front to back

cardiagn.com

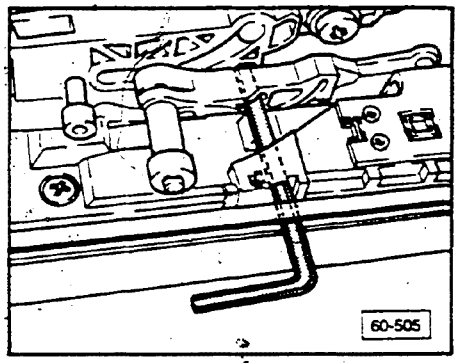

- insert modified 4.0 mm (5/32 in.) allen wrench through rear guide with cable, through alignment notches in guide channel with cable in "0" position
  - crank provided for emergency manual operation of sunroof may be used
- push rear guide with cable and guide with lift channel rearward (with allen wrench installed) until tight against stop (left/right side)
- reinstall motor in "0" position
  - torque 2-3 Nm (18-27 in. lb)
- remove allen wrench from both sides
- reconnect water drain connector rods
- reinstall sunroof panel, headliner panel

Sunroof panel, adjusting

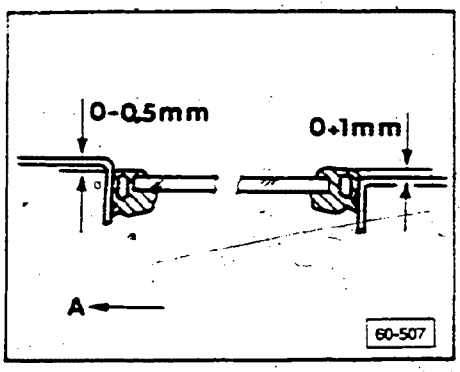

Note

Adjust front of sunroof panel lower than roof line and back of sunroof panel higher than roof line to prevent wind noise.

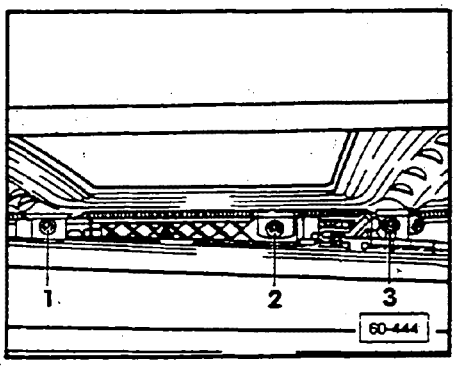

Front height

- loosen screws 1, 2 and set height according to illustration 60-507
- retighten screws
  - 4-5 Nm (35-44 in. lb)

cardiagn.com

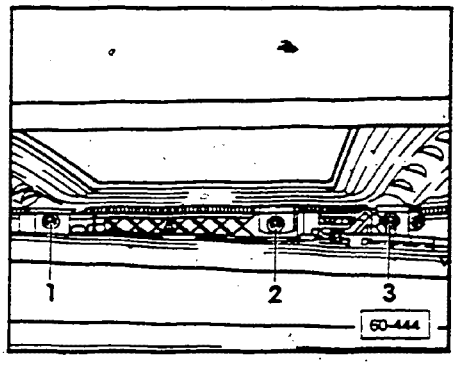

Rear height

- loosen screws **2**, **3** and set height according illustration 60-507
- retighten screws
  - 4-5 Nm (35-44 in. lb)

Sunroof panel seal, rep cing

- remove sunroof panel
- pull off old seal

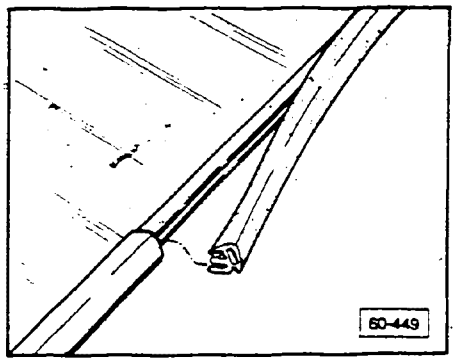

> **CAUTION**
>
> Part numbers are for reference only. Always check with your Parts Department for latest parts information.

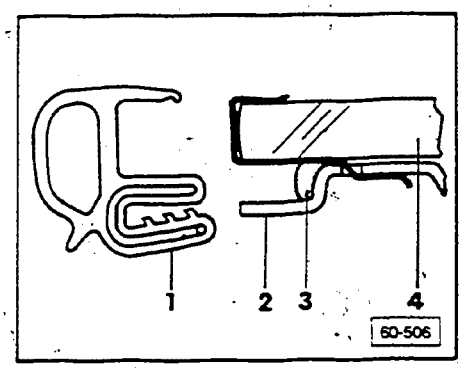

- apply sealing compound **3**
  Part No. **AKD 476 KD 505** or equivalent into frame **2** as shown
- fit panel seal **1** to glass panel **4** starting from rear of panel at center

Note

Excess adhesive may be removed with 3M All Purpose General Adhesive Cleaner or Equivalent.

- cut seal to correct length after installing
- test roof panel for water leaks

cardiagn.com

Front water drain hoses, cleaning

Front water drain hoses are routed through the A-pillars and discharge above the front door lower hinges.

- clean front drain hoses through sunroof opening

Note

For cleaning front hoses, it is recommended that an auxiliary tool be used — for example a 230 cm (90.5 in.) long probe made from the cores of speedometer cables.

Rear water drain hoses, cleaning

Rear water drain hoses are routed through the C-pillars and discharge into the water drain channel underneath the rear lid.

- open rear lid
- clean rear drain hoses from discharge end
- carefully blow compressed air through outlet end of hose to clean

cardiagn.com

Power glass sunroof with automatic preselect, troubleshooting

Note

Always refer to appropriate wiring diagram.

Test conditions

- battery **OK.**
- circuit breaker in auxiliary relay panel **OK**
- fuse **12 OK**
- sunroof motor drive cover, interior light removed

Tools required

- tester multimeter **US 1119** or **FLUKE 83**
- Connector Test Kit **VW 1594**

Sunroof does not work

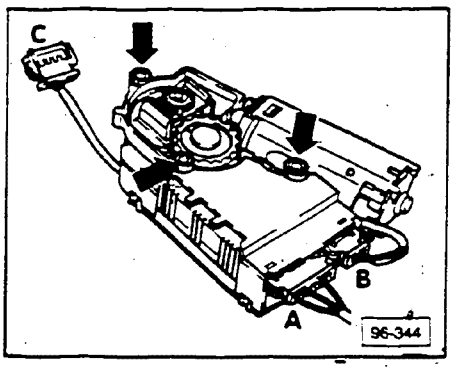

CAUTION

DO NOT damage, enlarge or bend connector terminals or cavities by forcing probes into them when performing electrical checks. Use Connector Test Kit **VW 1594** to make the necessary electrical connections.

Power to sunroof motor, checking	
■ disconnect 5 point connector **A** from control unit ■ switch ignition **ON** ■ set tester to volt scale ■ connect tester between terminal **2** and **5** of connector **A** • must be approximately 12.0 V ■ connect tester between terminal **2** and **4** of connector **A** • must be approximately 12.0 V	
Voltage measurement **NOT OK**	Voltage measurement **OK**
■ check and repair wiring according to wiring diagram ↓ End	Go to Ⓐ next page

cardiagn.com

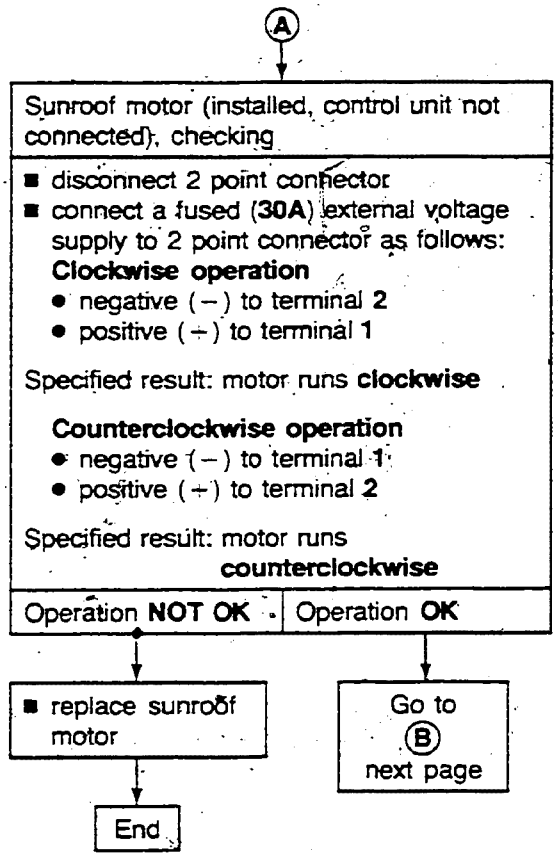

cardiagn.com

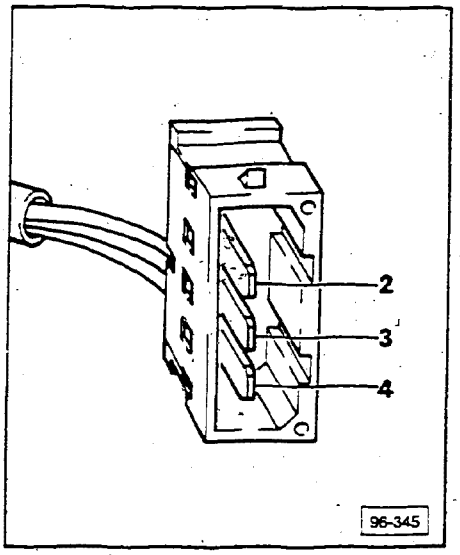

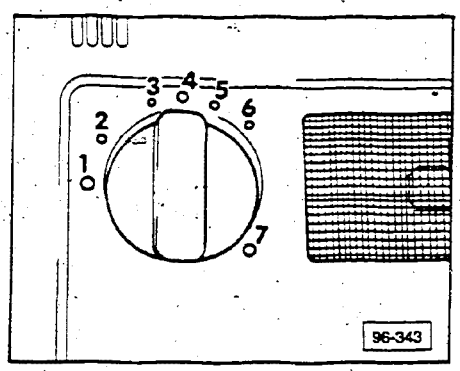

(B)

Sunroof does not move to preselected positions

Sunroof control switch **(E139)**, checking

- disconnect 4 point connector
- set tester to 20 K ohm scale
- connect tester between terminals **2** and **3** of 4 point connector
  - must read approximately 5 K ohm
- connect tester between terminals **2** and **4**, and set sunroof control switch to following position in turn:

Position	Specified reading (in K ohm)
1	0.6
2	1.1
3	1.85
4	2.2
5	2.55
6	3.0
7	4.6

Specified readings **OK**	Specified readings **NOT OK**
■ replace control unit, two pages forward	■ replace sunroof control switch **(E139)**, next page
End	End

cardiagn.com

Sunroof control switch (E139), removing/installing

Removing

- remove sunroof drive cover
- remove interior light assembly
- turn control switch until slot is visible in housing

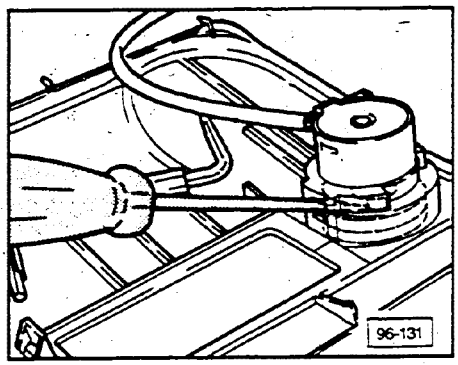

- insert screwdriver, as shown, up to shaft
- carefully pry off control switch knob
- remove nut, take out switch

Installing

Reinstall in reverse order, noting the following:

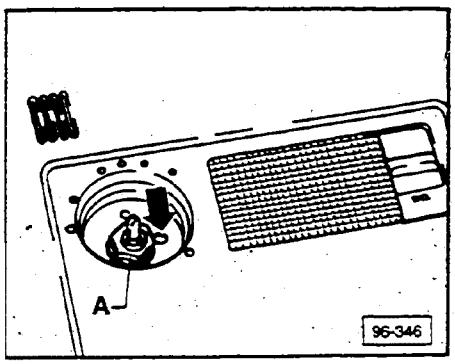

- ensure lug (**arrow**) on sunroof control switch engages in slot in cover
  - torque **A** 1.5 Nm (13 in. lb)

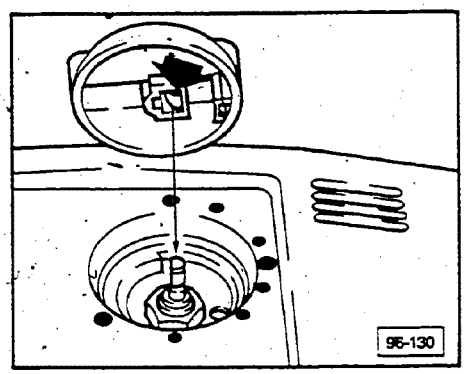

- press knob onto shaft
  - retaining spring (**arrow**) must face rounded side of shaft
- check sunroof for proper function

cardiagn.com

Sunroof control unit, removing/ installing

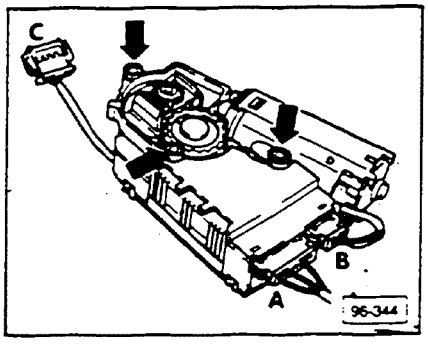

Removing

- remove sunroof motor
- disconnect plugs **A, B, C**
- remove bolts (**arrows**), take off control unit

Installing

Reinstall in reverse order of removal, noting the following:

Note

Sunroof motor must be set to "0" position **before** installing into vehicle

- set control switch to position **4**
- switch ignition on
  - motor will automatically move to "0" position
- reinstall sunroof motor into vehicle

cardiagn.com

Index

Expanding clip (Coupe)
- removing 63.8

Front bumper
- assembly 63.2
- towing hook/bracket 63.3

Front bumper (Coupe)
- assembly 63.6

Front spoiler/wheel house liner (Coupe)
- securing 63.8
- top mounting 63.9

Rear bumper
- assembly 63.4
- sealing 63.5

Rear bumper
- assembly 63.10
- removing/installing 63.12

Rear spoiler/wheelhouse liner (Coupe)
- securing 63.12

cardiagn.com

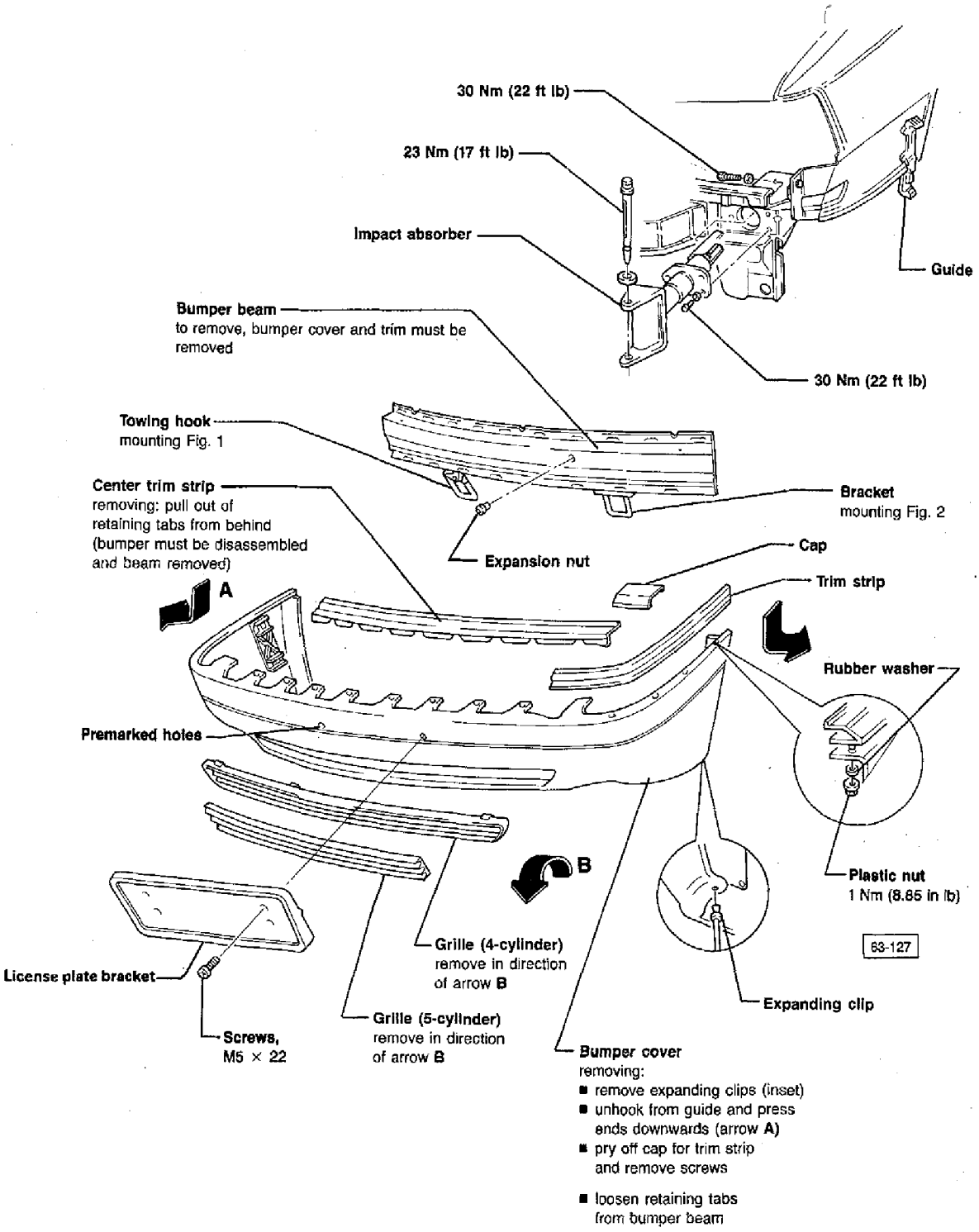

cardiagn.com

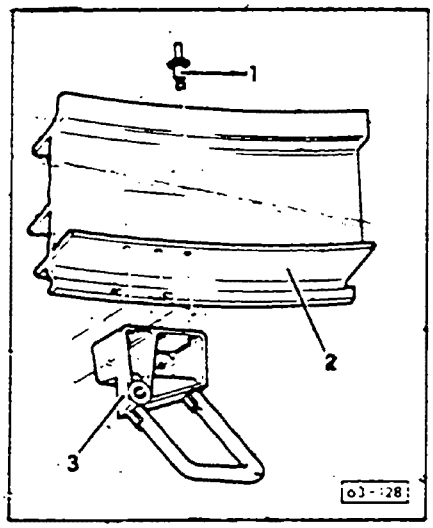

▶ **Fig. 1 Towing hook, mounting**

1 — Rivet
2 — Beam
3 — Towing hook bracket

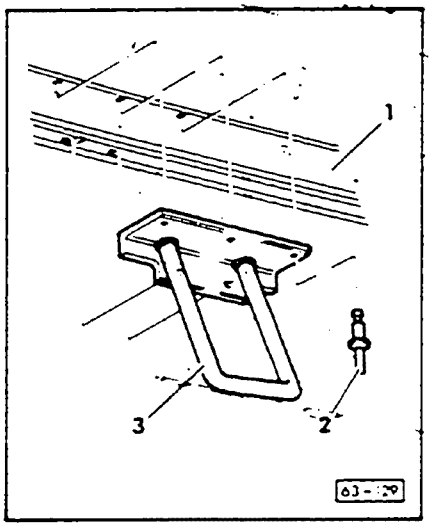

▶ **Fig. 2 Bracket, mounting**

1 — Beam
2 — Rivet
3 — Bracket

cardiagn.com

Note

On Quattro vehicles, the left impact absorber is held to the long member with an additional bolt. Torque this bolt to 23 Nm (17 ft lb).

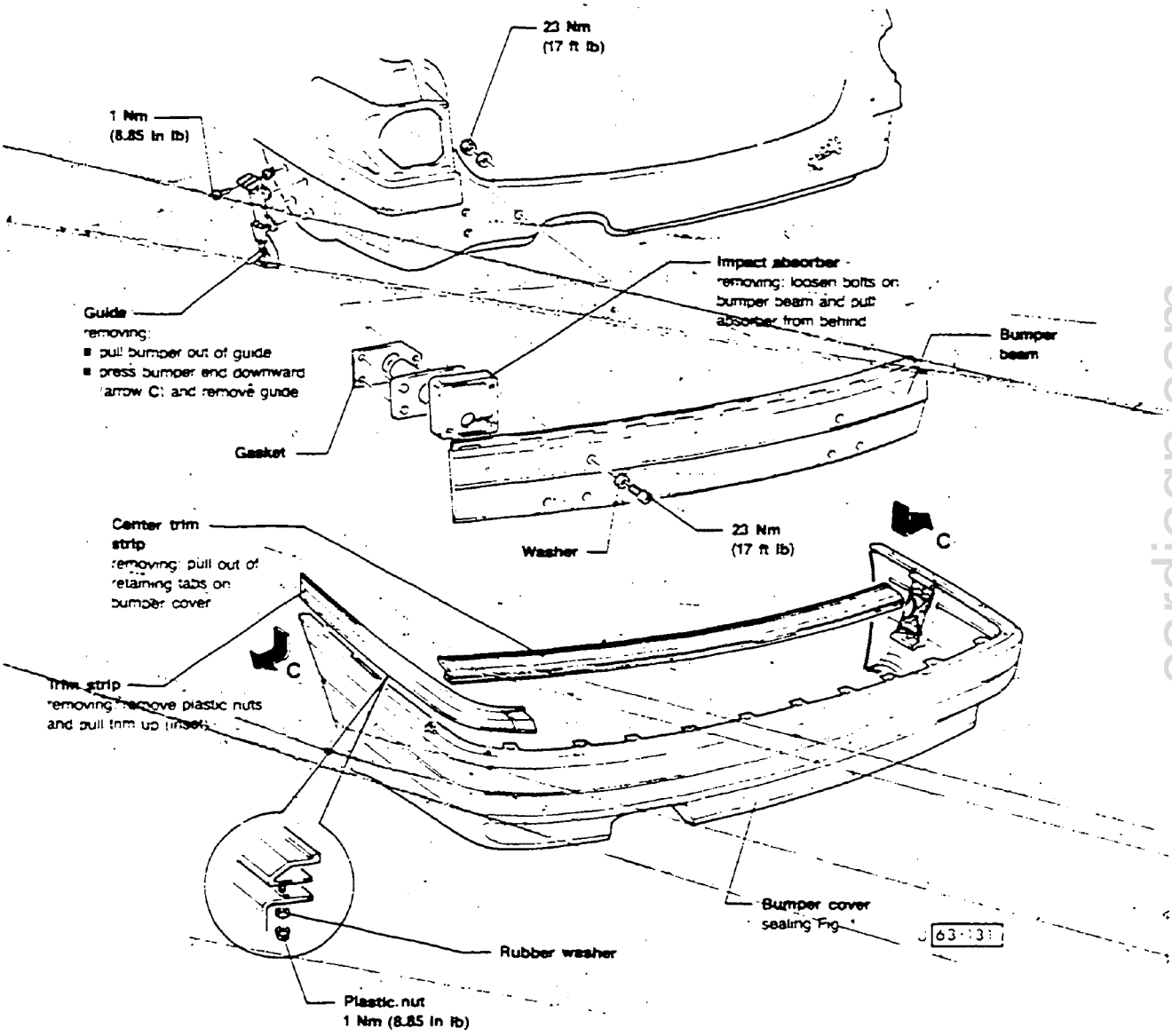

cardiagn.com

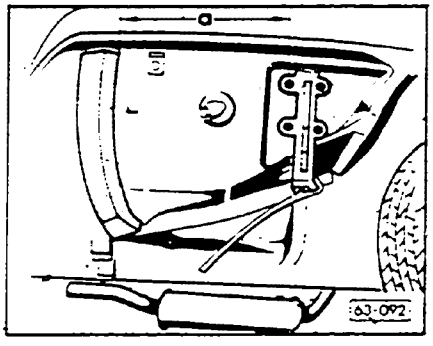

▶ Fig. 1 **Bumper, sealing**

a = 280mm (11.0 in)

cardiagn.com

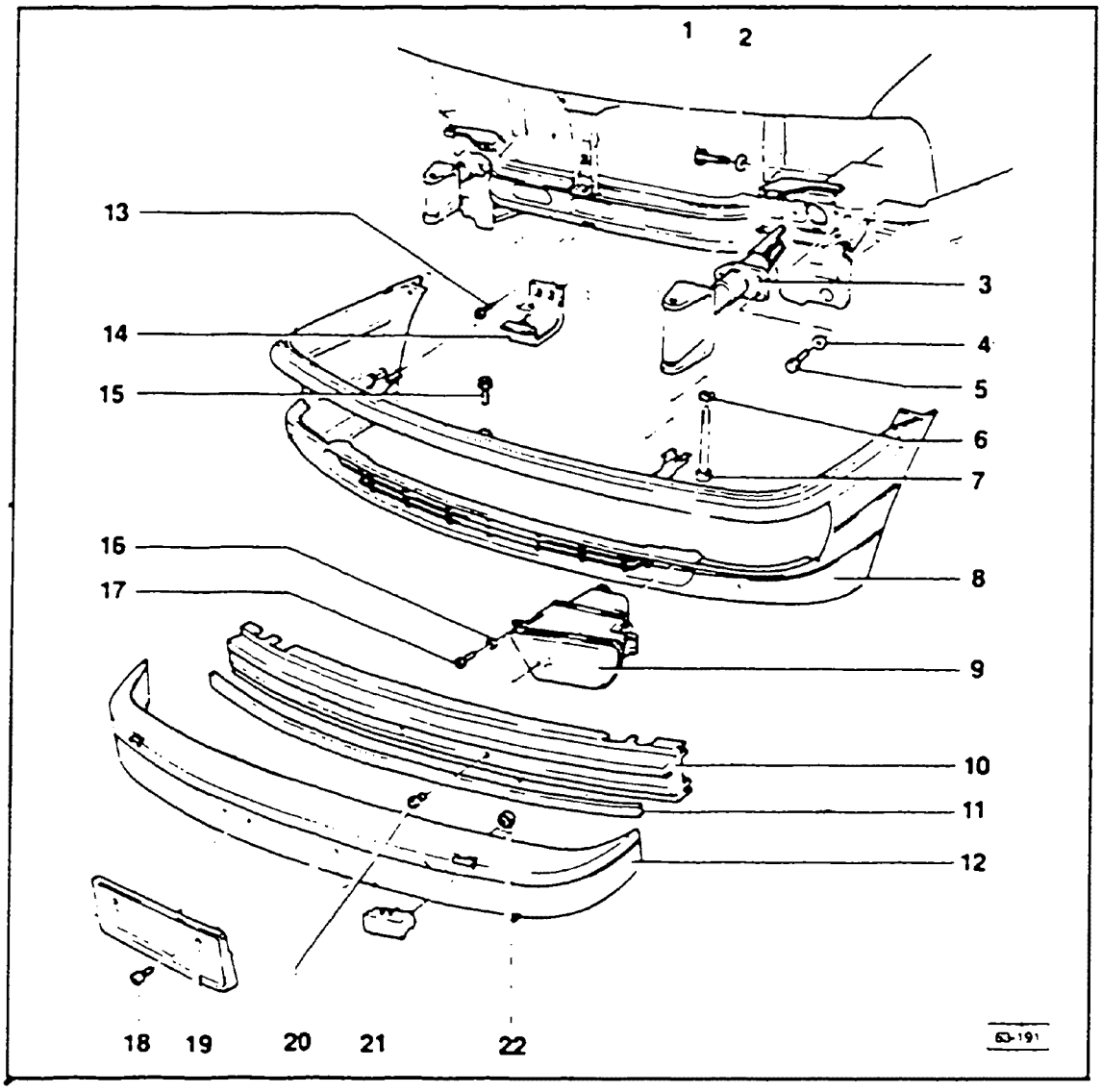

1 — **Hex head bolt**
23 Nm (17 ft lb)

2 — **Washer**

3 — **Impact absorber**
removing
- disassemble bumper
- unscrew hex head bolts

4 — **Washer**
three washer per impact absorber

5 — **Hex head bolts**
three bolts per impact absorber

6 — **Washer**

7 — **Pan head screw**
23 Nm (17 ft lb)

8 — **Spoiler**
removing
- disassemble bumper
- remove expanding clips Fig 1
- unbolt spoiler from wheel well housing Fig 2
- unbolt upper mounting bolts on spoiler Fig 3
- disconnect headlight washers or fog lights if applicable
- remove spoiler by pulling straight out from body

cardiagn.com

9 — **Fog lamp**
if applicable, does not need to be removed when removing spoiler

10 — **Bumper beam**
to remove, bumper cover and trim must be removed first

11 — **Trim strip**

12 — **Bumper cover**
can be removed after bumper is disassembled

13 — **Screw/washer**
6 Nm (53 in lb)

14 — **Bracket**
spoiler must hook into bracket when installing

15 — **Screw/washer**
6 Nm (53 in lb)

16 — **Washer**

17 — **Screw**
1.0 Nm (8.9 in lb)

18 — Self tapping pan head screw

19 — **License plate bracket**

20 — **Nut**

21 — **Headlight washer jet**
removing:
- remove bumper
- unscrew hex nut from inside
- remove washer jet from front

22 — **Hex nut**
secures headlight washer jet

cardiagn.com

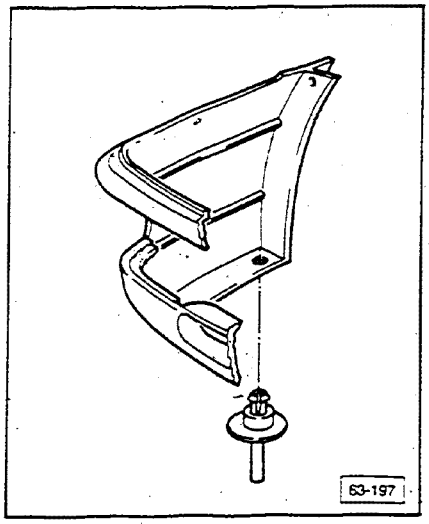

Fig. 1 Expanding clip, removing

- pierce pin on expanding clip
- remove clip

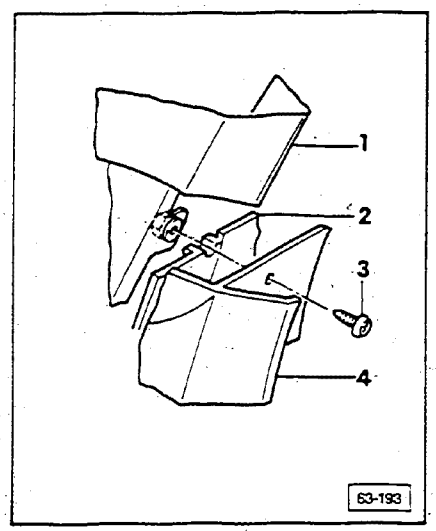

Fig. 2 Front spoiler/wheel house liner, securing

1 = fender
2 = wheel house liner
3 = screw/washer
- **6 Nm (4.4 ft lb)**

4 = Spoiler

cardiagn.com

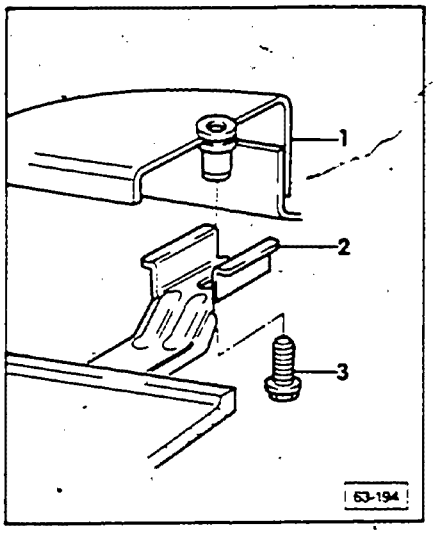

Fig. 3 Front spoiler top mounting, assembly

1 = headlamp mounting
2 = bracket
- part of bumper trim

3 = screw/washer
- **6 Nm (4.4 ft lb)**
- must be unscrewed prior to reinstalling spoiler

cardiagn.com

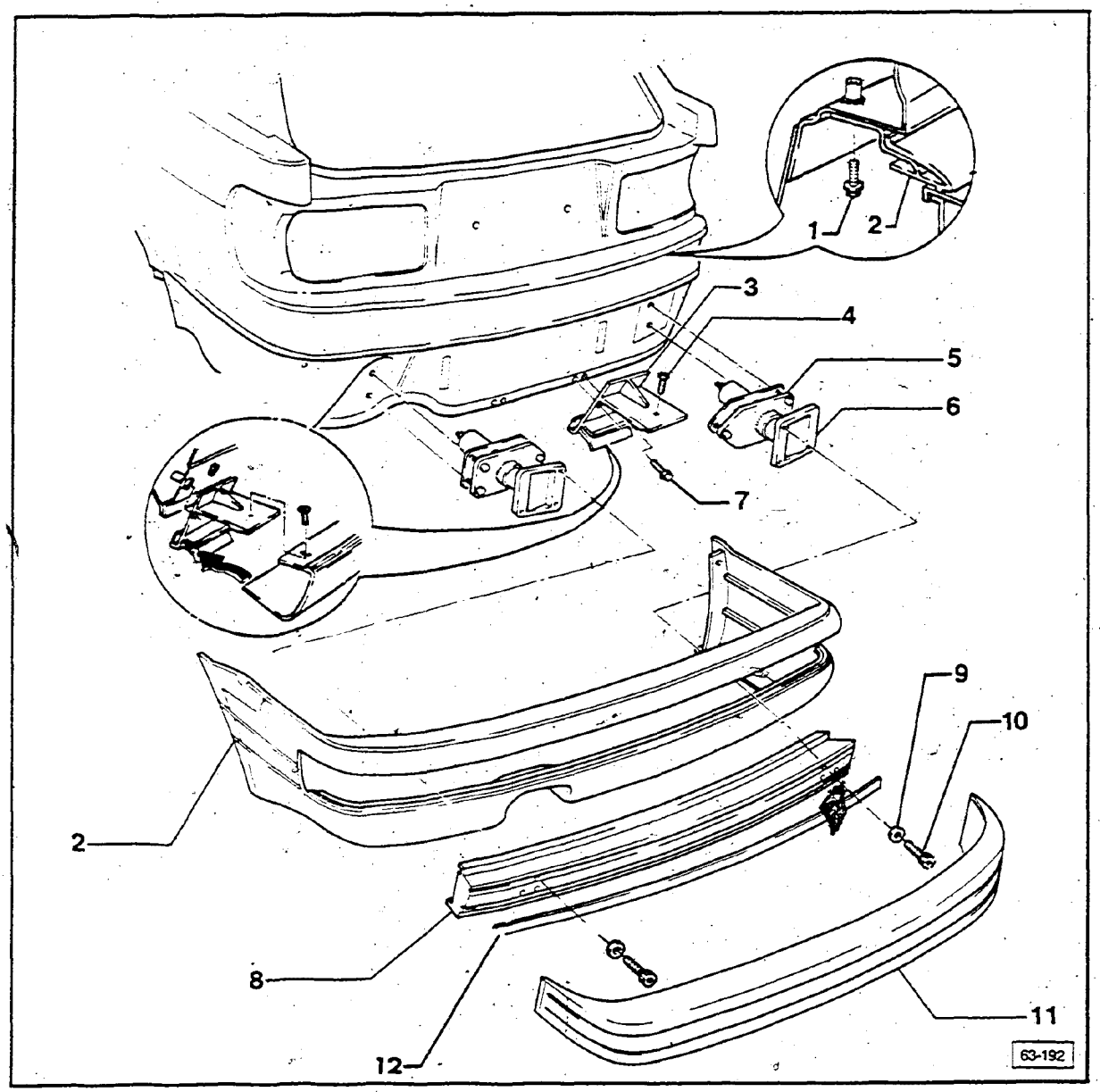

1 — **Screw/washer**
5 Nm (44 in lb)
to remove spoiler, take off center bolts, loosen end bolts

2 — **Rear spoiler**
disassemble prior to removing bumper removing:
- take off screws/washers **A** and **B**
- unscrew bolts on wheel house liner, fig. 1
- remove spoiler

3 — **Retaining clip**

4 — **Self tapping pan head screw**

5 — **Intermediate piece**

6 — **Impact absorber**
only remove after bumper cover disassembled, and bolts holding bumper loosened

7 — **Screw/washer**
5 Nm (44 in lb)

8 — **Bumper**
removing:
- take off luggage compartment trim, left, right and lower
- remove hex head nuts from inside vehicle, fig. 2
- pull bumper straight out toward rear

cardiagn.com

9 — **Washer**

10 — **Self tapping pan head screw**
23 Nm (17 ft lb)
Removing:
- take off bumper cover
- remove impact absorber

11 — **Bumper cover**
can be unclipped and removed after bumper is disassembled

12 — **Trim strip**

cardiagn.com

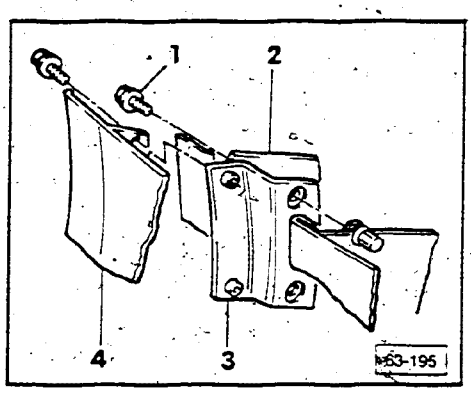

Fig. 1 Rear spoiler/wheel house liner, securing

1 = screw/washer
7 Nm (5.2 ft lb)
2 = wheel house liner
3 = bracket
4 = rear spoiler

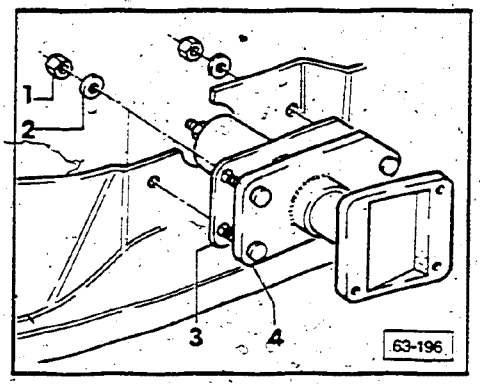

Fig. 2 Rear bumper, removing

- unscrew hex head nuts
  1 = hex head nuts
  2 = washer
  3 = intermediate part
  4 = impact absorber

Rear bumper, installing

Reinstall all components in reverse order of removal

cardiagn.com

Index

Power window regulators
- front door assembly 64.15
- operating switches, checking continuity 64.25
- operating switches, removing/installing 64.24
- rear door assembly 64.16
- safety switch, checking continuity 64.25
- safety switch, removing/installing 64.24
- thermofuse, location 64.26
- troubleshooting 64.17

Rear window
- installing 64.9
- removing 64.8

Side windows
- installing 64.12
- removing 64.11

Window lifter pivot
- repairing 64.38

Window regulator assembly
- inspecting 64.27

Window regulator drive cable
- replacing 64.40

Window regulator motor
- disassembly 64.28
- inspecting/cleaning 64.31
- reassembly 64.32
- replacing 64.34

Window replacing
- general information 64.2

Windshield
- installing 64.6
- removing 64.4

Coupe

Center spacer
- installing 64.49

Power window regulators
- circuit breaker, location 64.59
- operating switches, checking continuity 64.59
- operating switches, removing/installing 64.58
- regulator, checking/replacing 64.57
- troubleshooting 64.51

Side windows
- removing/installing 64.50

Window regulator motor
- replacing 64.60

Window replacing
- general information 64.42

Windshield
- installing 64.47
- removing 64.45

cardiagn.com

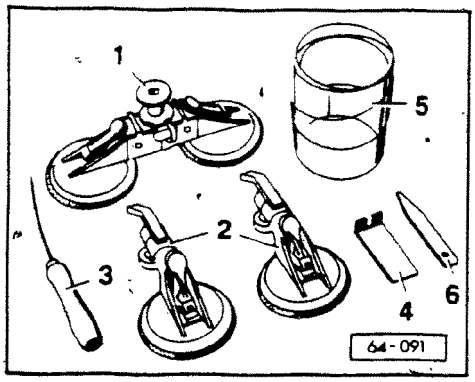

Window replacing, general information

To replace windshield, rear window or side windows, the following tools and materials are required.

Tool kit VW 1474

1 — Reel
2 — Relay roller with holder
3 — Awl
4 — Guide rail
5 — Protective sheeting
6 — Wedge

Use protective sheeting **VW 1474/7** to protect instrument panel.

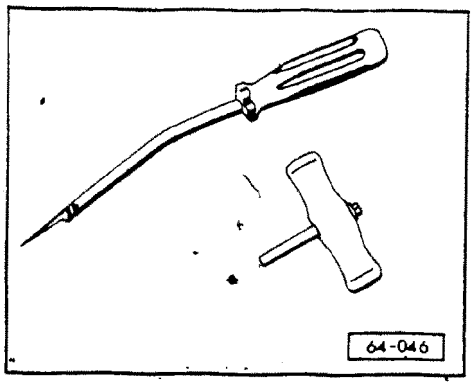

Tool kit VW 1351

- for removing broken windshields, rear windows and **broken** or **unbroken** side windows

CAUTION

To prevent paint damage, mask perimeter of windshield, rear and side windows with cloth duct tape.

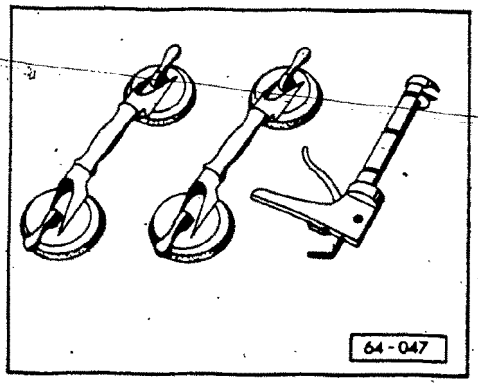

- caulking gun
- double suction pad (only for rear window, windshield)
- protective goggles
- utility knife
- protective gloves (leather)
- cloth or duct tape

cardiagn.com

Parts required

> **CAUTION**
>
> Part numbers are listed for reference only. Always consult with the Parts Department for latest information.

Description	Part number	Quantity
center spacers for windshield	893 845 631	1
adjusting wedges for rear window	893 845 631A 893 845 515A	2
cutting wire 50m (150 ft) roll	443 845 955	1
adhesive kit (vehicles **with** airbag)	D 004 300 03	1
adhesive kit (vehicles **without** airbag)	D 004 300 04	1
Mixing rod (For use with adhesive kit D 004 300 04)	D 009 700	1

Hardening of adhesive sealing compound

Vehicles without airbag

- vehicle **must** stand at least one hour, at room temperature of 20°C (68°F) and relative humidity of 65-70% before allowing vehicle to be driven

Vehicles with airbag

- vehicle must stand at least three hours, at room temperature of 20°C (68°F) and relative humidity of 65-70% before allowing vehicle to be driven
- keeping the sealed/bonded area wet forms a skin that promotes hardening process

cardiagn.com

Surplus bonding/sealing compound, removing

> **CAUTION**
>
> When using any cleaning agent, follow all cautions and warnings listed on the containers.

- first use dry cloth to clean off painted areas
- excess adhesive sealing compound can be removed using a cleaning solvent such as supplied in repair kit
  - do not use cleaners which contain alcohol
- to clean plastic trim, let adhesive sealing compound harden two to three hours, then scrape off excess with plastic wedge

Sealing leaks

> **CAUTION**
>
> While adhesive sealant is hardening, avoid putting pressure on glass from inside car when cleaning around glass.

- water test window area before reinstalling moldings, trim or lip or rubber molding
- dry area around leaks with compressed air and clean
- apply adhesive sealant from outside to leak area between glass and flange then smooth over
- retest area for water leaks

Note

The small adhesive sealant cartridge **D 009 100 03** is recommended for resealing.

cardiagn.com

Windshield, removing

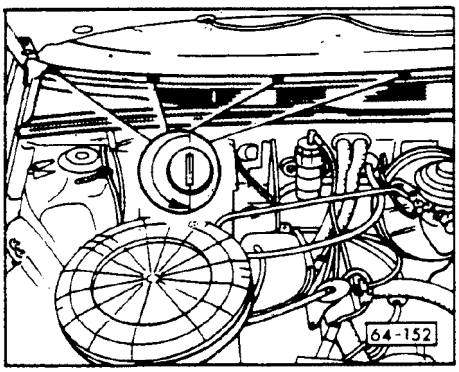

- remove A-pillar trim (see Repair Group 70)
- remove beading from headliner
- remove windshield wipers
- remove plenum chamber cover (as shown)
- disconnect wiring for front antenna

WARNING

Always wear protective goggles and leather gloves when removing and installing windows.

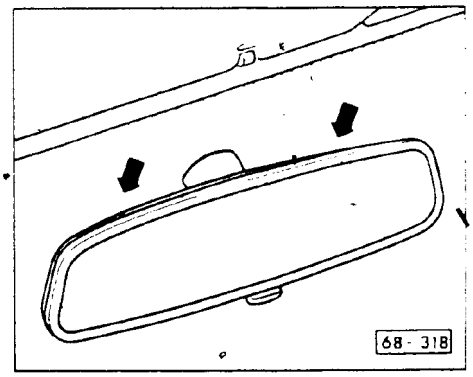

- remove inner rear-view mirror
  - press downward (**arrows**) at angle (spring clips in mirror mounting)

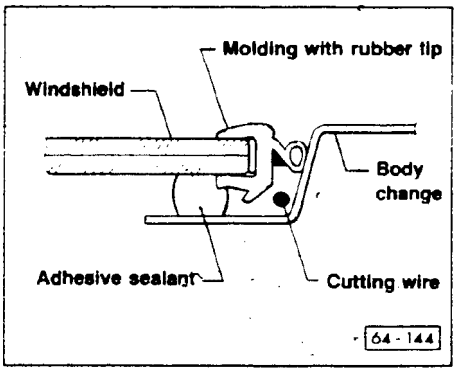

- cut off 6.5m (21 ft) cutting wire
- locate center of cutting wire
- on the outside, starting at top center of windshield, press cutting wire under rubber molding so wire runs completely around perimeter of windshield ending at bottom center

CAUTION

Do not bend or twist wire, otherwise wire will break when under tension.

cardiagn.com

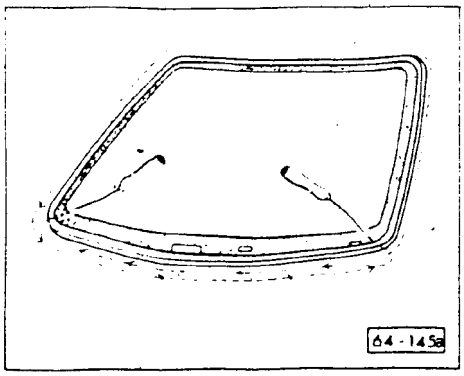

- from inside push awl through adhesive sealant at lower right corner (as shown) until awl eye is visible from outside
- turn awl slightly and thread in one end of wire
- bend over wire and pull through to inside of vehicle
- do same at lower left corner with other end of wire
- remove guide rail

CAUTION

Ends of wire must be in adhesive sealant as close together as possible, but must not overlap, otherwise glass will break or wire will bend or twist.

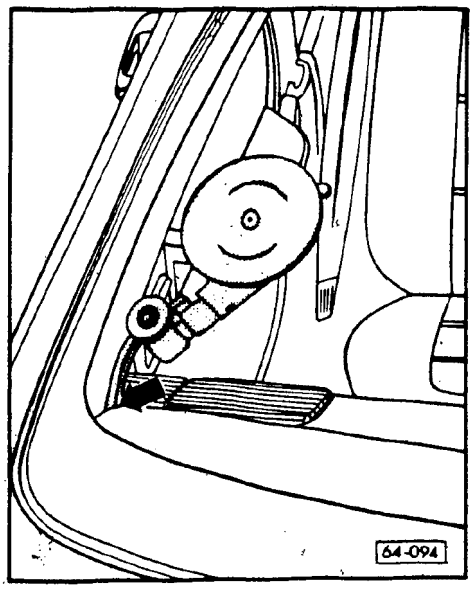

- attach relay roller with holder into left and right lower corner of windshield
  - holder must support on dashboard (**arrow**)

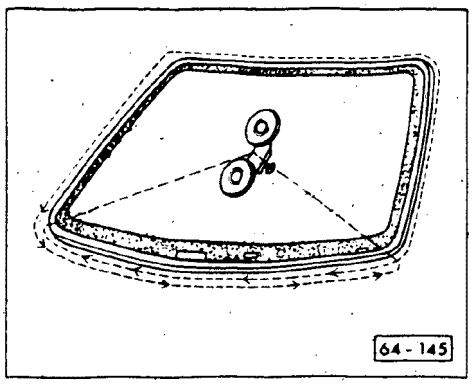

- attach reel (as shown) to center of windshield
- guide wire up from base of windshield and around relay rollers then thread ends into reel
- slightly tension cutting wire with reel and ratchet
- check that wire is placed correctly around corners and molding before cutting
- start cutting and continue cutting operation until relay rollers are clear
- remove relay rollers
- cut out windshield completely

CAUTION

Depending on extent of paint damage in removing windshield, touch-up or repaint as required.

Note

If cutting wire breaks several times (wire gets caught on the windshield flange) and can no longer be fitted on the reel (wire too short), cut remaining area with tool **VW 1351** (pulling handle and mounting).

A-6

cardiagn.com

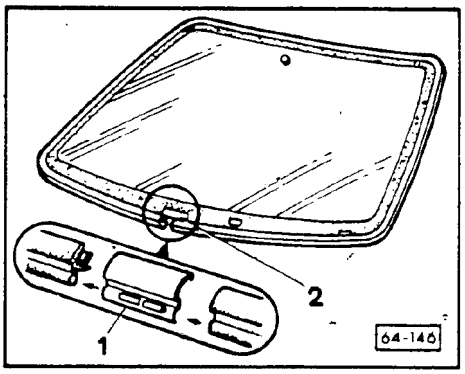

Windshield, installing

If windshield is to be reused, cut away enough old adhesive sealant with utility knife around glass and body flange to give smooth uniform surface.

If body repair has been done, body flange must be cleaned and primed with primer from adhesive kit.

- attach molding around windshield
- install joiner **1** into recess **2**
- clean edge of glass approximately 30mm (1-11/64 in) wide with cleaning solvent and wipe dry with lint-free cloth

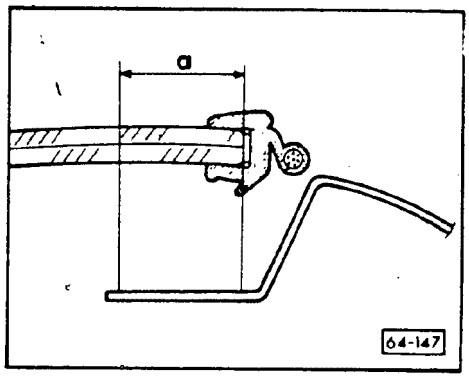

Ceramic black-out band around windshield is not primer. Before applying adhesive sealant prime this area with primer **D 009 200**.

- cut applicator head
- insert felt into applicator head
- thoroughly shake bottle of primer (approximately 30 seconds) and fill applicator bottle
- attach application head onto bottle
- apply primer **a** = 20mm (7/8 in) wide evenly all around edge of windshield in **one** continuous operation. Ensure applicator head is always completely saturated
  - drying time approximately 10 minutes

WARNING

Adhesive used in bonded window glass installations, original or replacement, may give off toxic fumes when heated. Read container labels. **Ensure adequate ventilation.**

Note

Do not retouch strip of primer until it has dried completely.

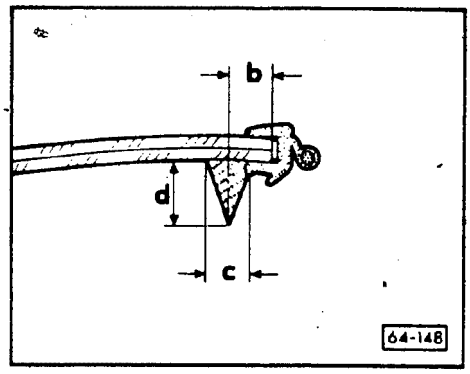

- apply adhesive sealant around windshield, making sure that the adhesive sealant touches the edge of the windshield

  b = 8mm (5/16 in)
  c = 8mm (5/16 in)
  d = 12mm (15/32 in)

Note

Reduce the height of adhesive by the thickness of the adhesive remaining on the windshield or the windshield body flange.

A-7

cardiagn.com

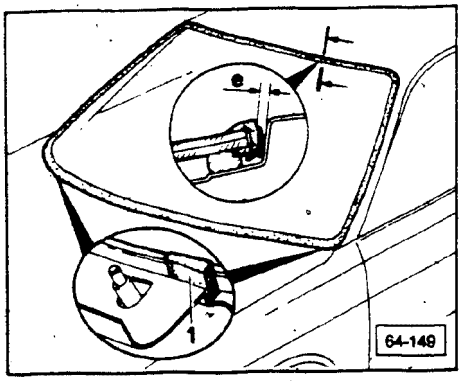

- place windshield into position using two double suction pad holders
- align windshield at the sides
- insert adjusting wedges **1** into corners of windshield (as shown)
  - wedges do not have to be removed
- align windshield gap **e** at top to 3-4 mm (1/8-5/32 in.)
- lightly press windshield into place
- press windshield at top until windshield molding is flush with roof
- test for leaks
- clean off surplus adhesive sealant from body and glass
- reinstall trim piece

CAUTION

Vehicles **with** airbags **must** stand at least three hours, at room temperature of 20°C (68°F) and a relative humidity of 65-70% before allowing vehicle to be driven.

Vehicles **without** airbags **must** stand for at least one hour.

Windshield height spacers

Audi 90 only

Note

In order to maintain proper spacing between windshield glass and body flange, three spacers must be installed near the lower windshield edge when replacing the windshield.

All dimensions are ± 2.0 mm (± 5/64 in.).

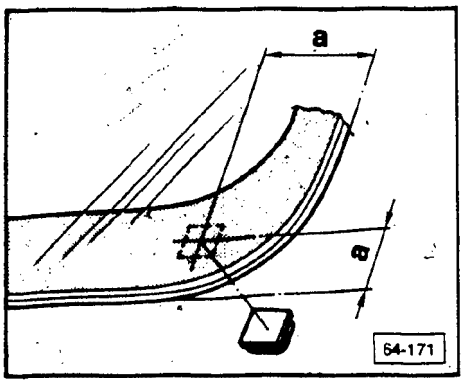

Side spacers, installing

- remove paper backing from spacers (self adhesive)
- apply spacer next to adhesive strip (as shown)
  a = 25 mm (1.0 in.)

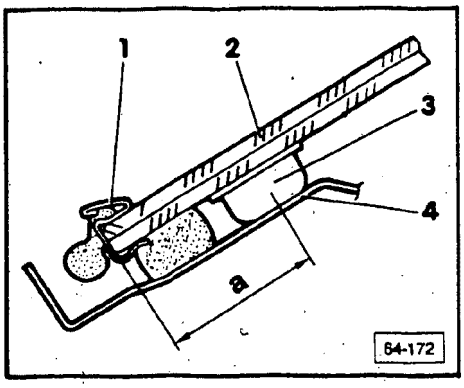

Center spacer, installing

- remove paper backing from spacer (self adhesive)
- apply spacer in center of glass (as shown)
  1 — trim strip
  2 — windshield
  3 — spacer
  4 — body flange
  a = 25 mm (1.0 in.)

cardiagn.com

WARNING

Wear protective goggles and leather gloves when removing and installing glass.

Rear window, removing

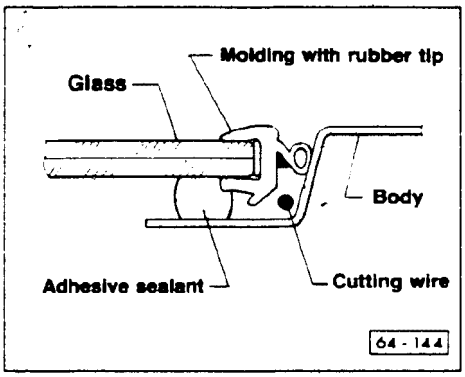

Note

When removing a **broken** rear window, cut adhesive on glass and body flange while removing pieces of broken glass. Do not remove all of adhesive.

- remove D-pillar trim
- unplug, unscrew connectors for heatable glass and rear window antenna
- tape connections out of way (in center of glass)
- remove high mounted brake light assembly
- cut off 6.5m (21 ft) cutting wire

- find center of cutting wire
- starting at top center of glass, press cutting wire under rubber molding so wire runs completely around perimeter of window ending at bottom center

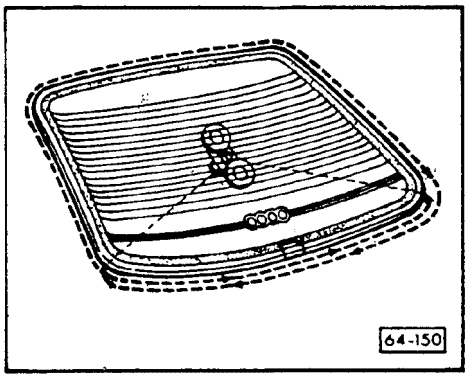

Note

Do not bend or twist wire, otherwise wire will break when under tension.

- insert ends of cutting wire separately into lower corners of glass and guide inwards into corners (as shown)
  - **do NOT twist**
- push awl through adhesive sealant until awl eye is visible from outside
- turn awl slightly and thread in one end of wire
- bend over wire and pull through to inside of vehicle
- do same with other end of wire
- remove guide rail

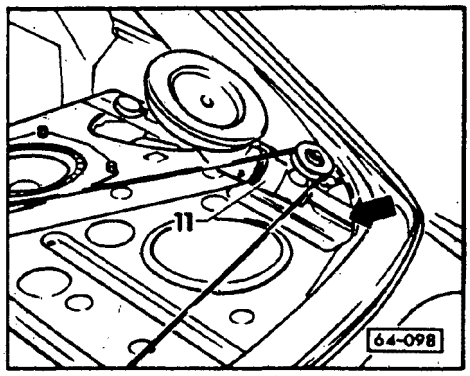

- attach relay roller with holder into left and right lower corner of glass (as shown)
  - holder must support on rear panel
- attach reel (as shown) to center of glass
- guide wire up from base of glass and around relay rollers

cardiagn.com

CAUTION

Ends of wire must be in adhesive sealant as close as possible together, but must not overlap, otherwise glass will break or wire will bend and/or twist.

- thread ends into reel
- slightly tension cutting wire with reel and ratchet
- check that wire is correctly around corners and molding before cutting
- start cutting and continue cutting operation until relay rollers are clean
- remove relay rollers
- continue to cut out rear glass

Note

If the cutting wire breaks several times (wire gets caught on the window flange) and can no longer be fitted on the reel (wire too short) this area can be cut through with tool **1351** (pulling handle and mounting).

Rear window, installing

CAUTION

Depending on extent of paint damage in removing rear window, touch-up or repaint as required.

If rear window is being reused, cut away enough old adhesive sealant with utility knife around glass and body flange to give smooth uniform surface.

If body repair has been done, body flange must be cleaned and primed with primer from adhesive kit.

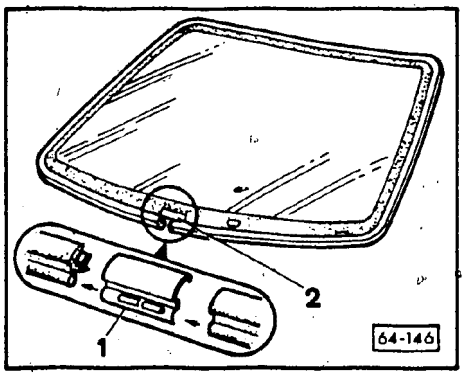

- attach molding around glass
- install joiner **1** into recess **2**

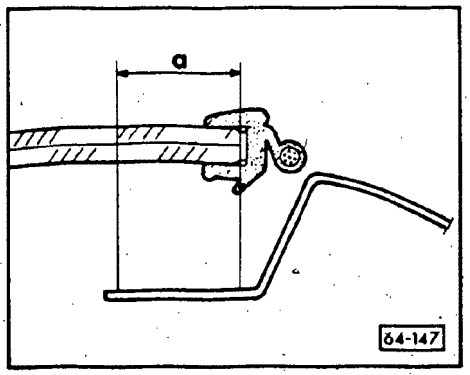

- clean edge of glass approximately 30mm (1-11/64 in) wide with cleaning solvent and wipe dry with lint-free dry cloth

Note

Ceramic black-out band around window is **not** primer. Before applying adhesive sealant prime this area with primer **D 009 200**.

cardiagn.com

- cut applicator head
- insert felt into applicator head
- thoroughly shake bottle of primer (approximately 30 seconds) and fill applicator bottle
- attach applicator head onto bottle
- apply primer **a** = 20mm (7/8 in) wide evenly all around edge of glass in **one** continuous operation. Ensure applicator head is always completely saturated
  - drying time approximately 10 minutes

Note

Do not retouch strip of primer until it has dried completely.

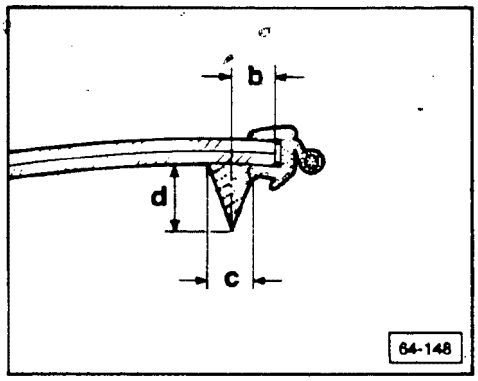

- bend open connections for window aerial, heated window glass
  - bend 90° to glass

- apply adhesive sealant around rear window making sure that the adhesive sealant touches the edge of the glass

  b = 8mm (5/16 in)
  c = 8mm (5/16 in)
  d = 12mm (15/32 in)

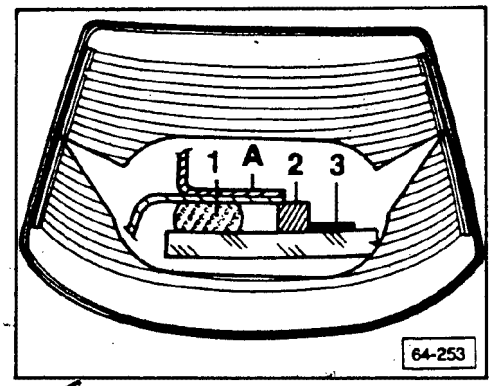

- remove protective backing from wedges Part No. **893 845 515A**
- bond wedges **2**, on body flange **A**, between adhesive 1 and edge of defroster/antenna element **3**

Note

Reduce the height of adhesive by the thickness of the adhesive remaining on the rear window or rear window flange.

CAUTION

The distance between the adhesive and the bus (heated rear window and window antenna) should be at least 10mm (25/64 in).

When window is installed, the spacing over the entire length must be at least 3mm (1/8 in).

If the adhesive makes contact with the bus, there will be no radio reception with the window antenna.

cardiagn.com

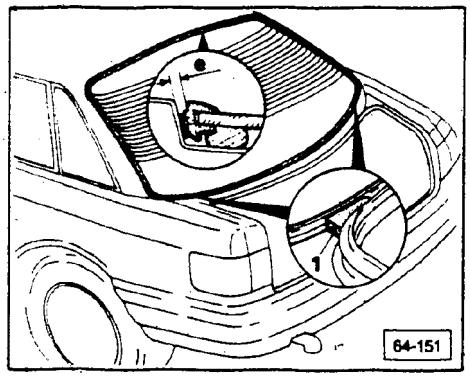

- place rear window into position using two double suction pad holders
- align rear window at sides
- insert adjusting wedges **1** Part No. **893 845 631A** into corners of rear glass (as shown)
  - wedges do not have to be removed

CAUTION

Vehicle must stand at least three hours, at room temperature of 20°C (68°F) and a relative humidity of 65-70% before allowing vehicle to be driven.

- align window glass gap **e** at top to 3-4mm (1/8-5/32 in)
- lightly press in rear window
- test for leaks
- clean off surplus adhesive sealant from glass or body
- reinstall trim

Side windows, removing

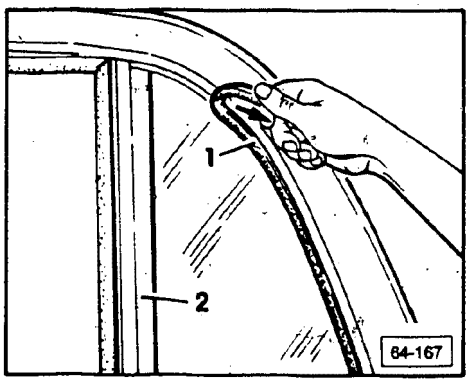

Removing

- remove D-pillar trim (see Repair Group 70)
- remove rear bench and backrest (see Repair Group 72)
- remove C-pillar trim (see Repair Group 70)
- pull out rubber gap cover **1** (as shown)
- cut panel **2** from window with utility knife
  - only on **unbroken** windows.

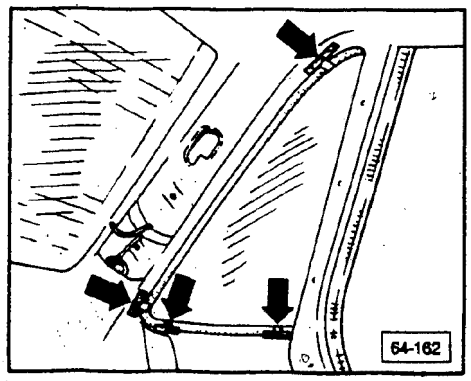

- bend retaining plates away from frame (**arrows**)
- mask window opening at bottom (side section) and **D**-pillar with duct tape

cardiagn.com

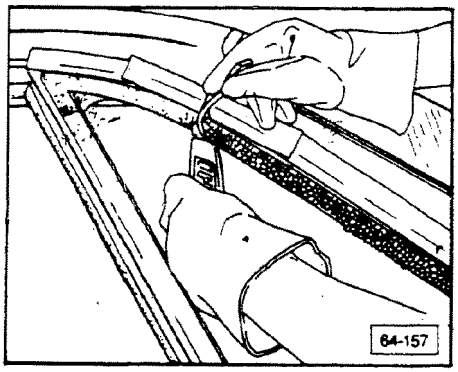

Removing broken window

- remove pieces of glass up to the adhesive sealant.
- remove remains of glass and adhesive sealant from body flange using cutting tool **VW 1351** and knife

Note

If gap between glass and flange is less than 5mm (1/4 in) use **only** a utility knife to remove pieces of broken glass (as shown)

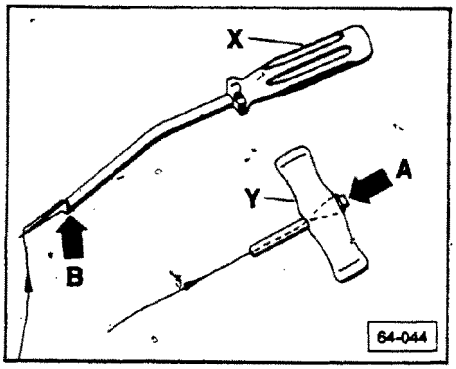

Unbroken window, removing

- working from interior of vehicle, use pliers to push cutting wire (approximate length 350-400mm, 14-16 in) through adhesive sealant between window and body flange
- secure cutting wire with the wire ends at **X** and **Y** of the cutting tools
  - part **X** goes in the interior of the vehicle
  - part **Y** goes on the outside of the vehicle
- thread wire in direction of arrow, **A** clamp on, or **B** screw on

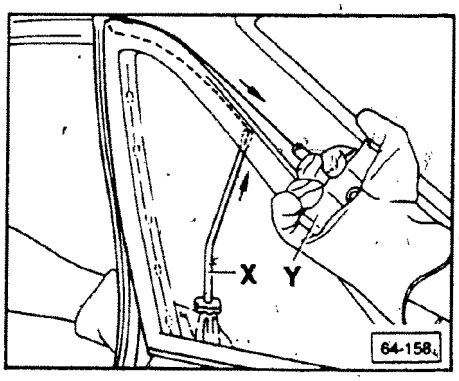

- insert cutting tool **X** into adhesive sealant and secure
- using handle **Y**, pull wire evenly in direction of arrow (as shown) until retaining lug is reached
- pull wire with cutting tool **X** inwards, insert into adhesive sealant approximately 100-150mm (4-6 in) further on and secure
- continue pulling until next retaining lug is reached and then repeat procedure until completely cut out

cardiagn.com

Side windows, installing

If an unbroken window is to be reused, use a utility knife to cut any remaining adhesive sealant on the glass and metal flange back until smooth.

- do not remove completely

The remaining sealant acts as a base for application of new adhesive sealant. Keep surfaces free of dirt and grease.

CAUTION

Depending on extent of paint damage in removing side window, touch-up or repaint as required.

Note

If body repair has been done, body flange must be cleaned and primed with primer from adhesive kit.

Note

The ceramic black-out band around glass is not primer. Before applying adhesive sealant, prime this area with primer **D 009 200**.

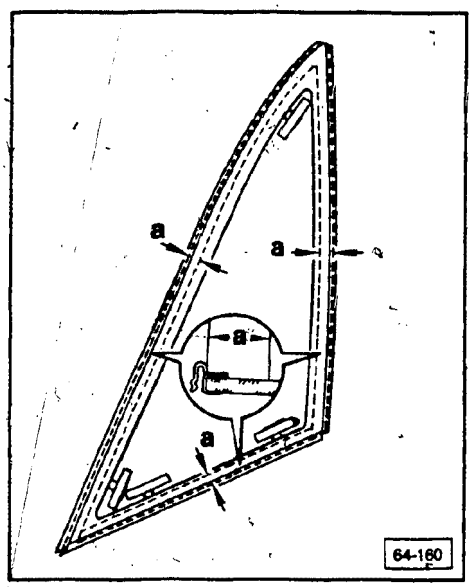

- apply primer **a** = 20mm (7/8 in) wide evenly all around edge of glass in one continuous operation. Ensure applicator head is always completely saturated.
  - drying time approximately 10 minutes

CAUTION

Do not retouch strip of primer until it has completely dried.

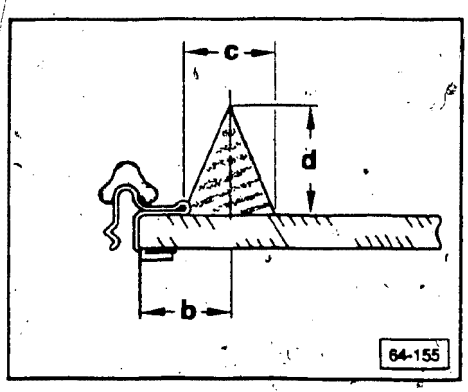

- apply adhesive sealant all around window, making sure that the adhesive sealant touches the edge of the window molding

  b = 8mm (5/16 in)
  c = 8mm (5/16 in)
  d = 12mm (15/32 in)

cardiagn.com

- reduce the height of adhesive by the thickness of the adhesive remaining on the glass or body flange

Note

A mounting kit is available when reinstalling glass.

- remove backing off adhesive strips of retaining plates
  - retaining plates only on replacement parts
- insert window into place
- align window, ensure rubber gap cover fits evenly around
- bend retaining plates so that adhesive strips are supported

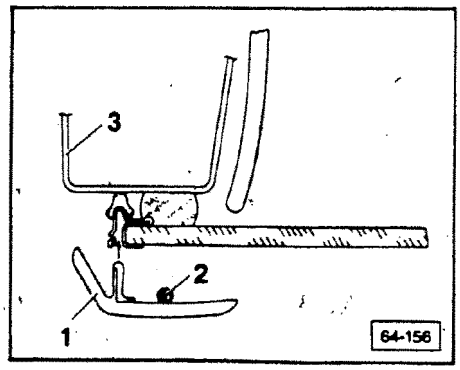

- clean outside of window around trim plate **1** in adhesive area with cleaning solution from adhesive kit
- apply primer on trim plate **1**, C-pillar **3**
- apply adhesive sealant to trim plate **1**
  - bead thickness 4.0mm (5/32 in) diameter

CAUTION

The rear door (contact area between the door seal and the newly bonded window) must remain closed during the curing period. After three hours vehicle may be driven.

- secure window glass and trim plate with cloth tape
- test for leaks
- clean off surplus adhesive sealant from glass and body

cardiagn.com

CONTINUED IN THE

BEGINNING OF NEXT ROW

cardiagn.com

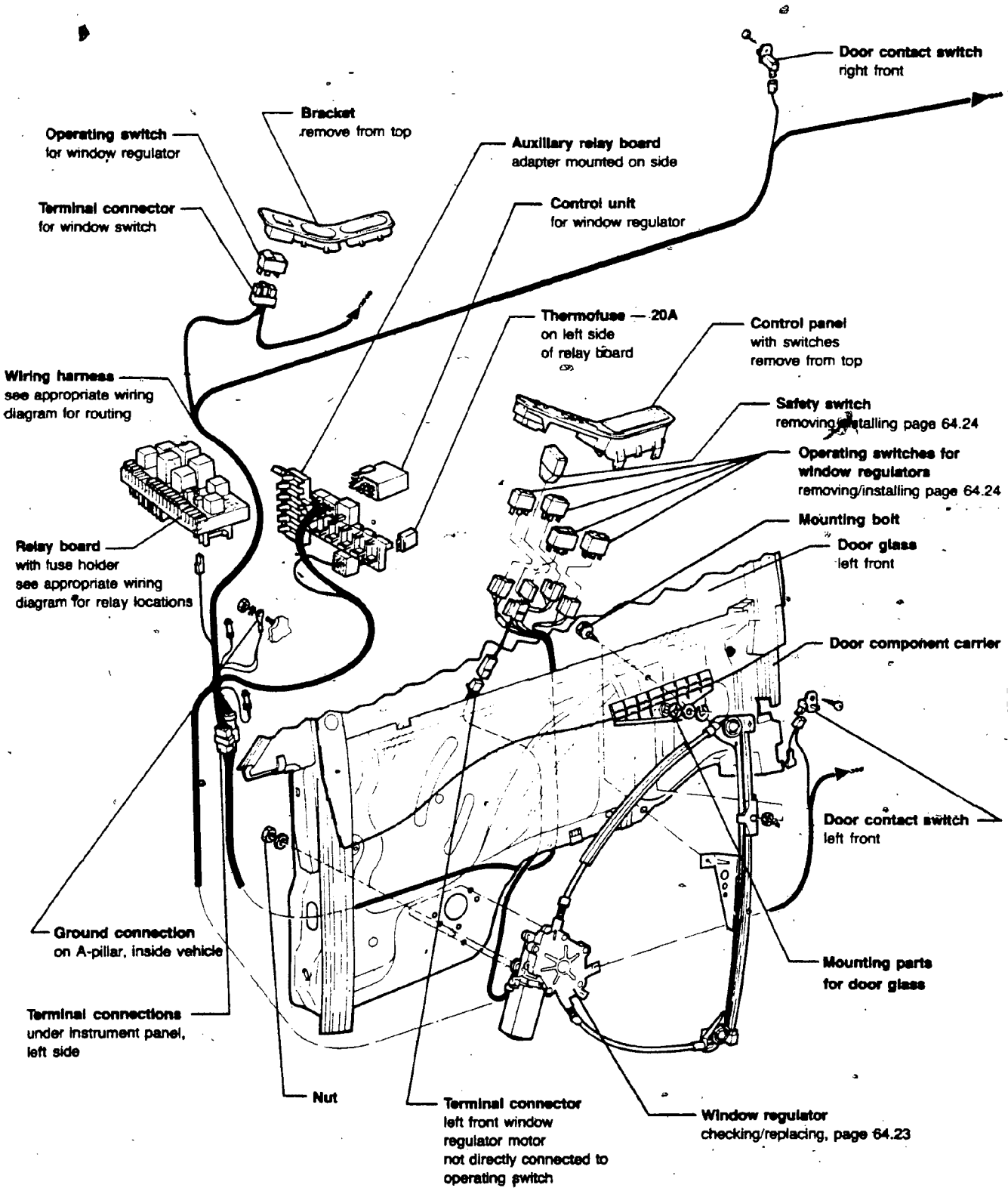

B-2

cardiagn.com

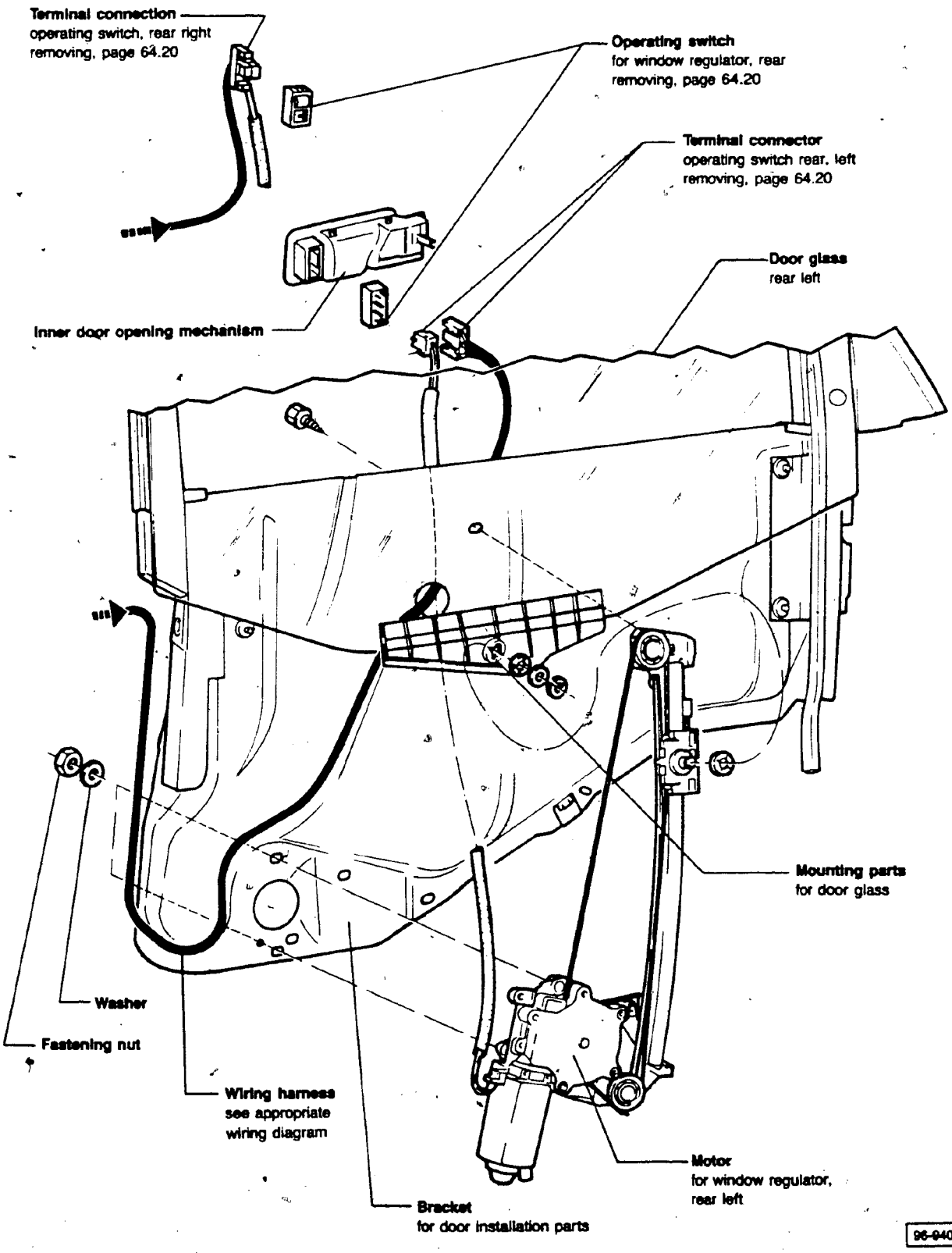

B-3

cardiagn.com

Troubleshooting — power window regulators

Note

Refer always to appropriate wiring diagram.

Test conditions

- battery **OK**
- rear window safety switch disengaged
- with ignition on, control unit "clicks" when drivers window switch activated

Tools required

- multimeter **US 1119**
- LED tester **US 1115**
- test adapter **VW 1594**
- sun **VAT 40** or **VAT 60** or equivalent with current test lamp

No window operates

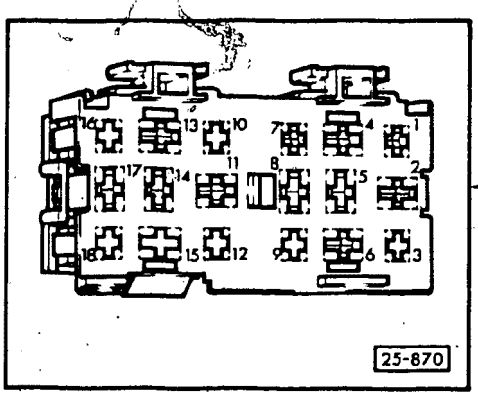

No power

- remove left lower dashboard cover
- pull control unit from auxiliary relay panel
- connect tester to terminals **14** and **2**
  - must read 12V
- connect tester to terminals **14** and **1**
- turn on ignition
  - tester must read 12V

specified values **NOT OK**	specified values **OK**
■ repair break in electrical wiring or ■ replace thermofuse	Go to Ⓐ page 64.18

End

cardiagn.com

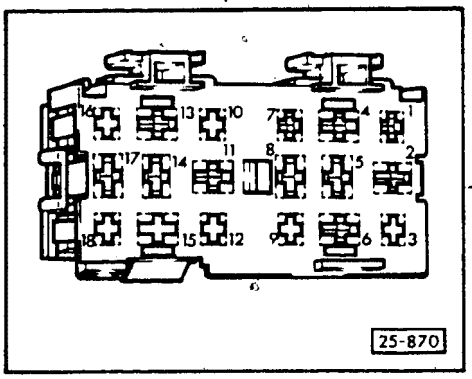

Ⓐ

Checking front door contact switches

- connect tester to terminals **14** and **3**
  - specified value 0 ohms
- press right front door contact switch
  - specified value ∞ ohms
- connect test device between terminals **14** and **6**
  - specified value 0 ohms
- press left front door contact switch
  - specified value ∞ ohms

specified values **NOT OK**	specified values **OK**
■ repair break in electrical wiring → End	■ reinstall control unit → Go to Ⓒ page 64.20

cardiagn.com

One front, or rear door window not working

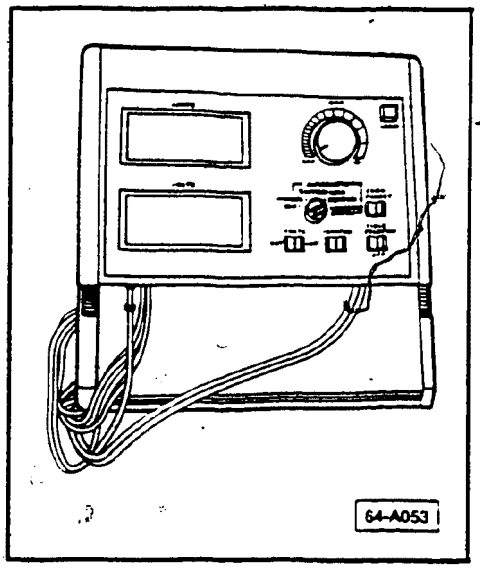

Checking window regulator current draw (installed)

- connect volt/amperage tester **Sun VAT 40**, or **VAT 60** or equivalent
  - **Sun VAT 60** shown
- connect inductive pick-up to battery ground strap
- switch ignition **ON**
- press operating switches for window regulators one after the other (open or close)
- measure current draw during window switch operation
  - must be **6-12A** (during window travel)

Note

The tester will always indicate a certain current reading when the ignition is switched on; this reading will vary according to operating conditions and the type of model and equipment, to correct:

- zero tester to compensate for other electrical consumers
- after glass is at top or bottom and switch depressed, current must be between **15-20A** (stall current)

specified values **NOT OK** no current draw → Go to Ⓒ page 64.20

stall current **OK** window does not move → Go to page 64.23

specified values **OK** → window regulator **OK** → End

B-6

cardiagn.com

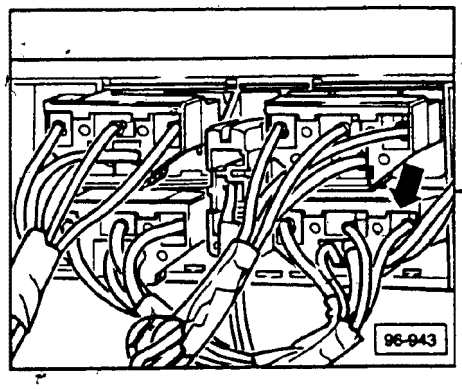

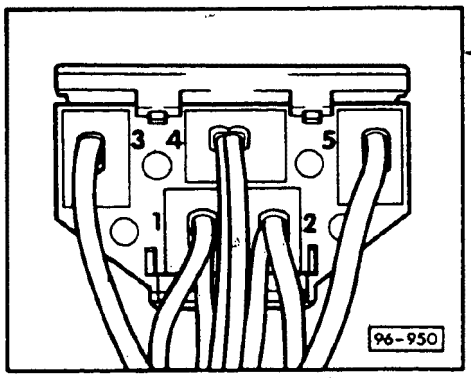

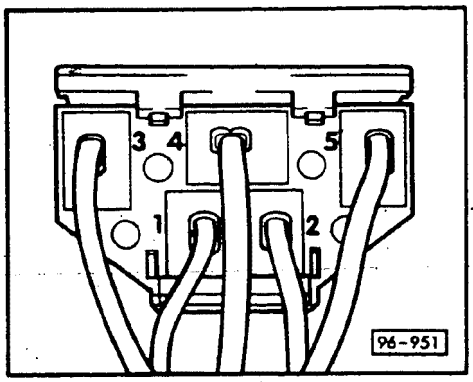

Ⓒ

Driver's window operating switch, checking

- remove control unit from door trim panel
  - wire to left front window regulator motor routed through terminal **T2**
- turn on ignition
- measure voltage between terminals **3** and **4**, **5** and **4**
  - must read approximately 12V
- connect tester to terminals **3** and **2**
- lower window
  - must read approximately 12V

Note

Voltage can only be measured while door glass is being lowered.

- connect tester to terminals **3** and **1**
- raise window
  - must read approximately 12V

Operating switches for right front, rear window, checking

Note

Do not disconnect terminals from control panel.

- turn on ignition
- measure voltage between terminals **3** and **4**, **5** and **4**
  - must read approximately 12V
- connect tester to terminals **3** and **2**
- lower window
  - must read approximately 12V
- connect tester to terminals **3** and **1**
- raise window
  - must read approximately 12V

Go to Ⓓ page 64.21

cardiagn.com

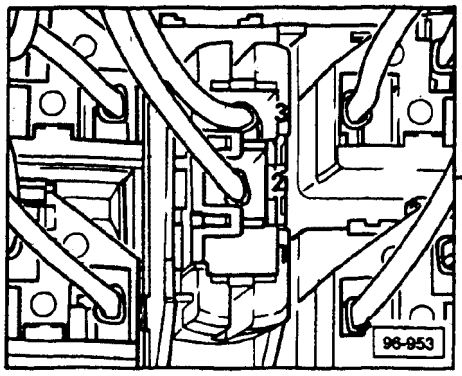

D

Rear window safety switch, checking

Note

Switch must not be depressed. Do not disconnect terminals.

- turn on ignition
- connect tester to ground and terminal **2**
  - must read 12V
- connect tester to ground and terminal 1
  - must read 0V
- depress safety switch
- connect tester to ground and terminal 1
  - must read approximately 12V

specified values **NOT OK**	specified values **OK**
■ repair break in electrical wiring or ■ check operating switches, safety switch for continuity. Go to Page 64.25	Go to Page 64.22

cardiagn.com

Window operating switches in doors

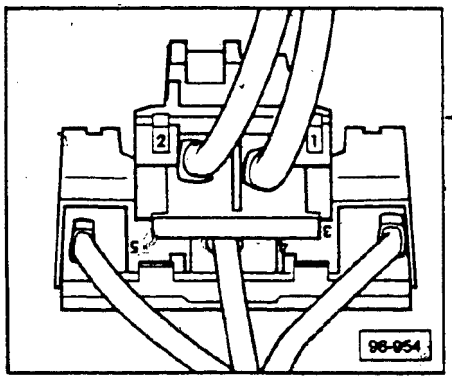

Right front window switch, checking

- remove switch from door trim panel
  - do not disconnect wiring
- turn on ignition
- measure voltage between terminals **3** and **4**, **5** and **4**
  - must be approximately 12V
- connect tester to terminals **3** and **2**
- lower window
  - must read approximately 12V
- connect tester to terminals **3** and **1**
- raise window
  - must read approximately 12V
- test rear window switches in same way
  - safety switch in control panel must be depressed

specified values **NOT OK**	specified values **OK** window does not move
■ repair break in electrical wiring or ■ check switches for continuity. Go to Page 64.25	■ repair wiring to window regulator motor, or replace window regulator. Go to Page 64.23

End

cardiagn.com

Window regulator, checking

- remove door trim panel
- reconnect window operating switch
- loosen regulator mounting bolts
- start engine
- depress switch to lower window
  - use second mechanic to push glass down

window moves down	window does not move down
■ unplug operating switch ■ set window in half-open position ■ adjust end stop → End	■ replace window glass regulator

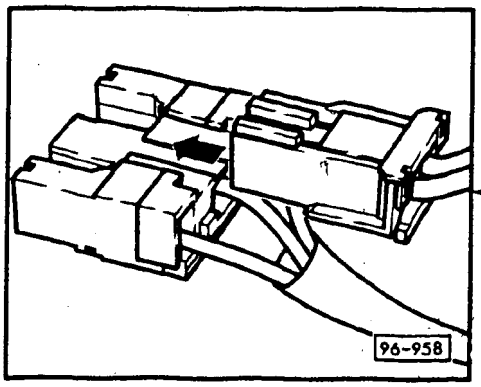

Window regulator, replacing

- remove regulator mounting bolts
  - door trim panel removed
- remove mounting bolts for regulator
- pull off terminal connector for window regulator motor (**arrow**)
- withdraw regulator from bottom
- reinstall regulator in reverse order
- with ignition off, set glass at half way up position and adjust end stop

→ End

cardiagn.com

Window regulator operating switches, replacing

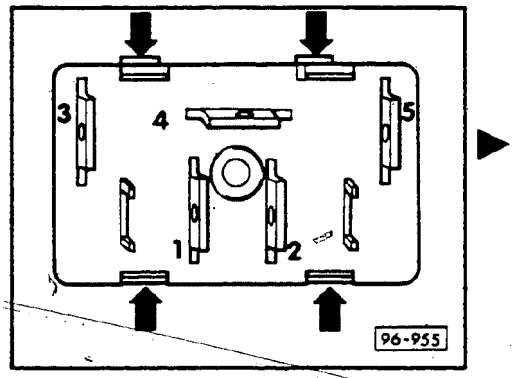

- pry out from door trim panel
- pull off terminal connector

Driver's door control panel switches

- pry switch from panel at points shown (**arrows**)
- push switch out of panel from bottom

Right front, rear window operating switches

- pry out of door trim panel
- reinstall in reverse order, noting:
  - switches are pressed in until "click" is heard

Safety switch, removing/installing

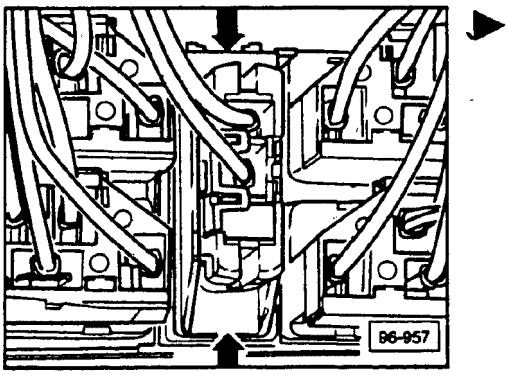

Removing

- remove control panel from door
- pull off terminal connector
- insert small screwdriver at **arrows** and twist slightly
  - press switch out at same time

Installing

- install in reverse order, noting:
  - push switch in until "click" is heard

cardiagn.com

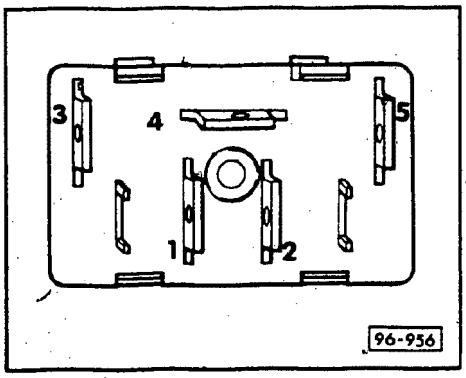

Window regulator operating switches, checking continuity

- remove switch
  - pry out
- pull off terminal connector
- connect tester to terminals **5** and **2**, then **3** and **1**
  - specified value 0 ohms
- connect tester to terminals **4** and **2**
  - specified value ∞ ohms
- operate switch to lower window
  - specified value 0 ohms
- connect tester to terminals **4** and **1**
  - specified value ∞ ohms
- operate switch to raise window
  - specified value 0 ohms

specified values **NOT OK**	specified values **OK**
■ replace operating switch → End	End

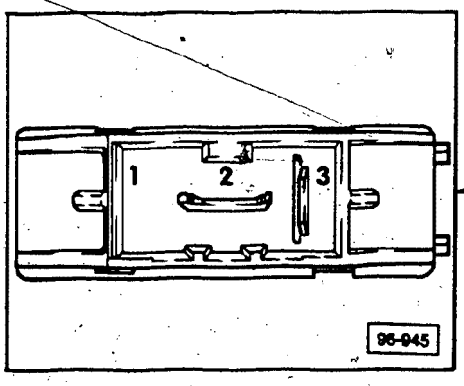

Safety switch, checking continuity

- remove driver's door control panel
- connect tester to terminals **2** and **3**
  - specified value ∞ ohms
- push button in
  - specified value 0 ohms

specified values **NOT OK**	specified values **OK**
■ replace safety switch → End	End

cardiagn.com

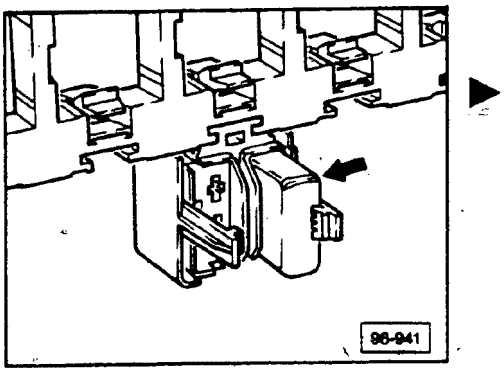

Thermofuse, location

On left side of auxiliary relay panel (**arrow**).

cardiagn.com

CONTINUED IN THE

BEGINNING OF NEXT ROW

cardiagn.com

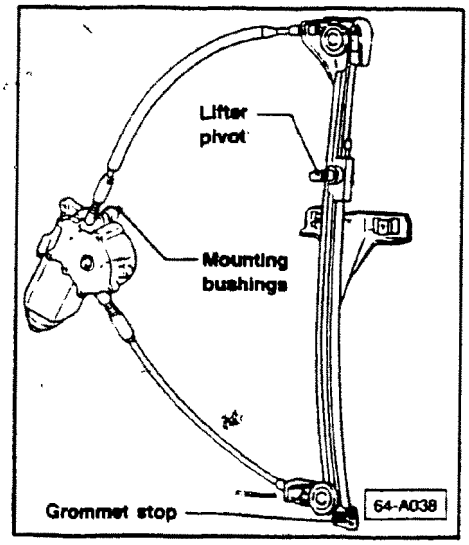

Window regulator assembly, inspecting

Note

Before replacing/repairing window regulator components, check window switch, electrical wiring for proper function.

- remove door trim panel
- inspect the following

Regulator drive cable
If cable broken or frayed, window regulator drive cable assembly must be replaced. Go to page 64.39

CAUTION

Part numbers are for reference only. Always check with your Parts Department for latest parts information.

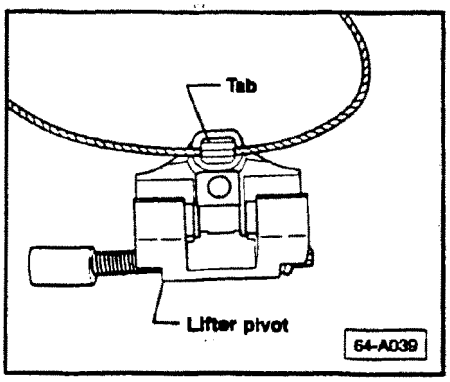

Lifter pivot
If tab broken or loose, reattach with modified swivel pins. Go to page 64.38

Grommet stop
Replace if missing or cracked.
Part Number **443 837 486**

Electric motor mounting bushing
Replace if split or broken.
Part Number **431 133 741**

cardiagn.com

CAUTION

Part numbers are for reference only. Always check with your Parts Department for latest parts information.

CAUTION

Disassemble window regulator motor on clean work surface.

NO dirt or dust must enter motor.

Relubricate with grease **G 000 450 02** or equivalent as required.

Window regulator motor/ disassembling

Note

Before disassembling window regulator motor, check window switch, electrical wiring and mechanical portion of regulator assembly for proper operation.

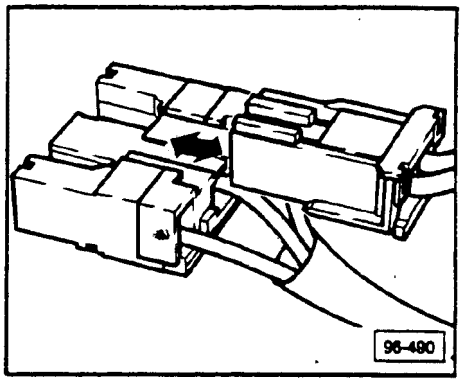

- remove door trim panel
- remove inner door panel
- remove regulator mounting bolts, and remove regulator from inner door panel
- pull off terminal connector for regulator motor (**arrow**)

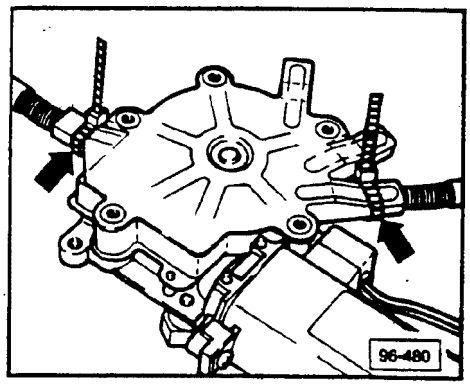

- with regulator removed from door assembly
- clamp housing cover and plastic bearing cover together with tie-wraps as shown (**arrows**)

cardiagn.com

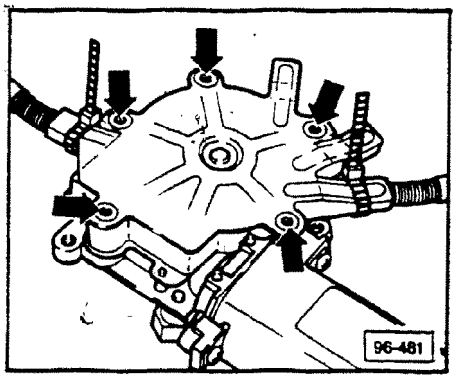

- remove mounting bolts securing motor to drive cable housing (**arrows**)

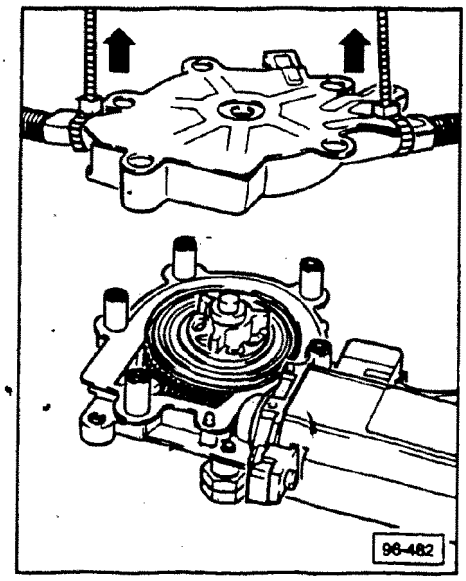

- using a rocking motion, carefully separate drive cable and cable spool from motor
  - do not damage mating surface

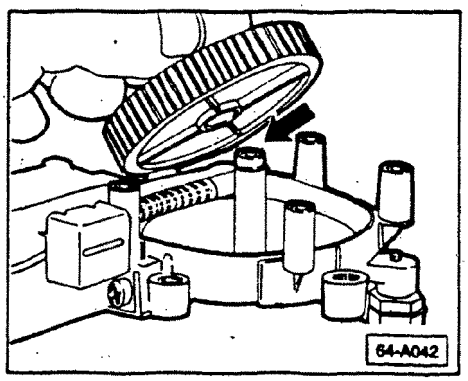

- lift out vaned drive gear and set aside
- clean any corrosion from shaft (**arrow**) with fine grit (400) sandpaper
- lubricate shaft with small amount of water repellent grease G **000 450 02** or equivalent

C-4

cardiagn.com

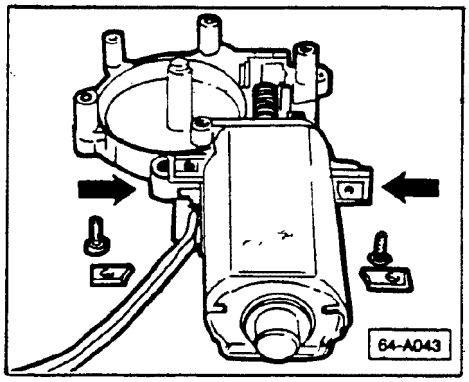

- remove two screws and square washers (**arrows**)

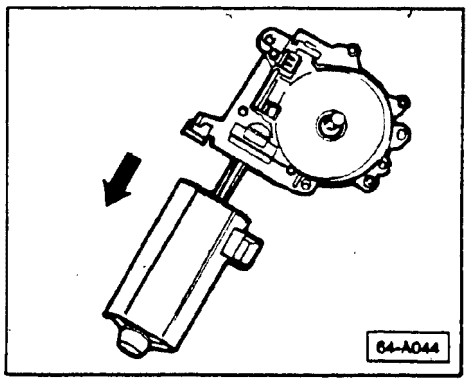

- carefully pry apart motor and gear housing (**arrows**)
  - use thin blade screwdriver, if necessary

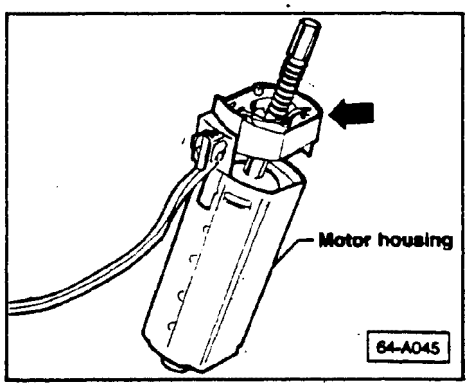

- remove white plastic carbon brush holder from motor housing (**arrow**)

cardiagn.com

CAUTION

Do not scrape or use any abrasives to clean carbon brushes.

Window regulator motor, inspecting/cleaning

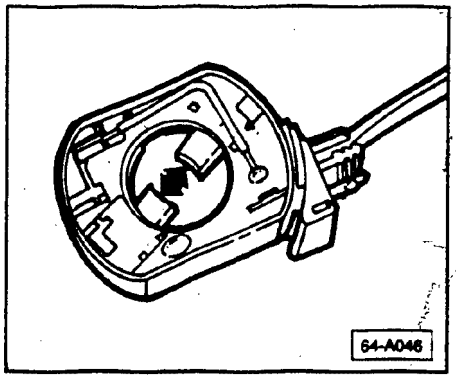

- clean contact surfaces on carbon brushes (**arrow**) with electrical contact cleaner spray
  - commercially available
- dry with compressed air
- remove armature from motor housing and inspect armature

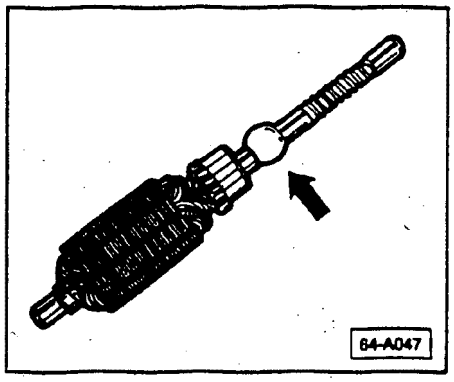

Note

If front armature bushing is seized to armature (**arrow**), proceed as follows:

- carefully remove bushing
- remove any burrs from armature shaft and inside of bushing
- reinstall bushing into gear housing

CAUTION

Do not use any abrasive materials on commutator or brushes.

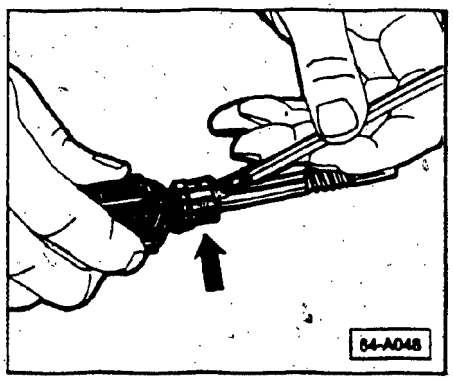

- clean commutator (**arrow**) with pencil eraser
- clean between commutator segments with a wooden toothpick

C-6

cardiagn.com

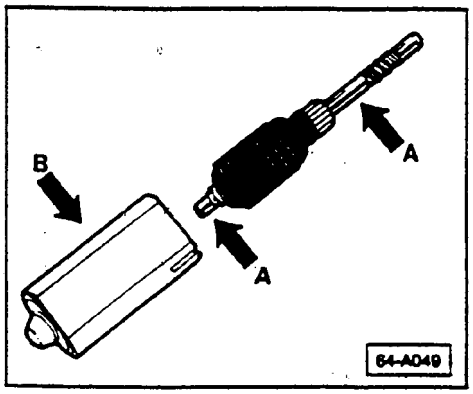

- lubricate shaft at **A** with G 000 450 02 or equivalent
- clean inside of motor case **B** with Brakleen® or equivalent
- blow dry with compressed air

Window regulator motor, reassembling

Reinstall all window regulator motor components in reverse order of removal, noting the following:

- install brush assembly on commutator
- slide armature with brush assembly into motor housing
- attach motor to gear housing and install vaned drive gear

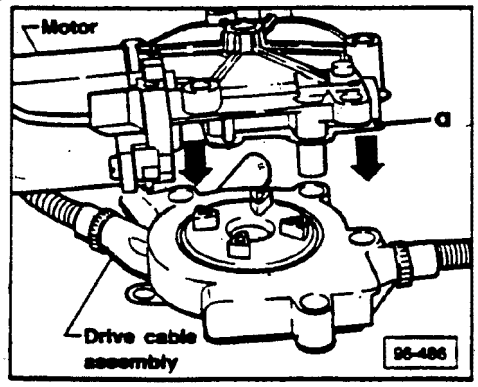

- reinstall regulator motor to drive cable assembly
  - apply slight amount of grease to secure gasket **a** when installing

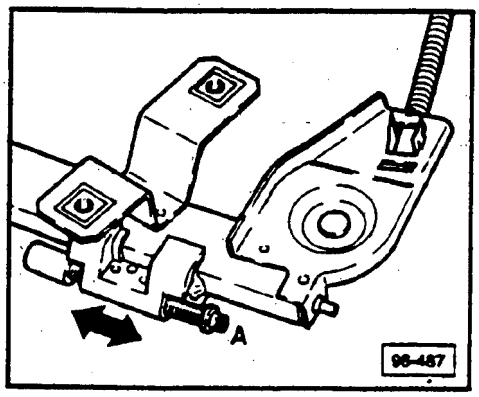

- if regulator motor and cable drive assembly cannot be fitted together move cable carrier slightly (**arrow**)
  - do not turn screw **A** for upper window stop

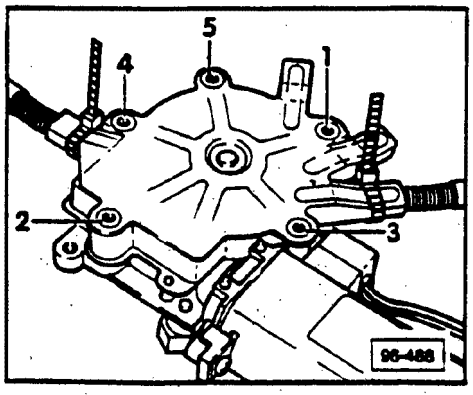

- reinstall and tighten mounting bolts diagonally in numerical order as shown
  - 3 Nm (2.2 ft lb)

C-7

cardiagn.com

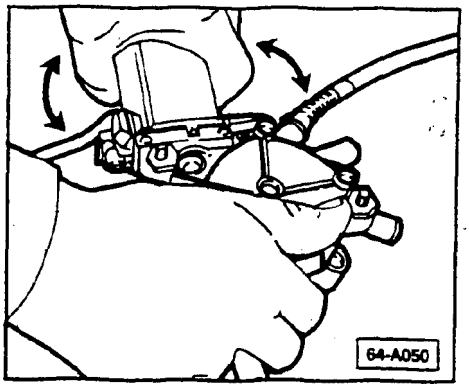

- connect regulator assembly to power supply
- operate motor in both directions
- if motor is noisy in one or both directions, proceed as follows:
  - loosen two screws securing motor to gear housing
  - gently twist motor housing back and forth while operating motor
  - retighten screws when motor is operating the quietest

- cut off excess length of tie-wraps to prevent getting caught in window regulator

- reinstall window regulator and door panel
- test window for proper function

cardiagn.com

CAUTION

Part numbers are for reference only. Always check with your Parts Department for latest parts information.

CAUTION

Disassemble window regulator on clean work surface.

NO dirt or dust must enter motor.

Relubricate with grease **G 000 450 02** or equivalent as required.

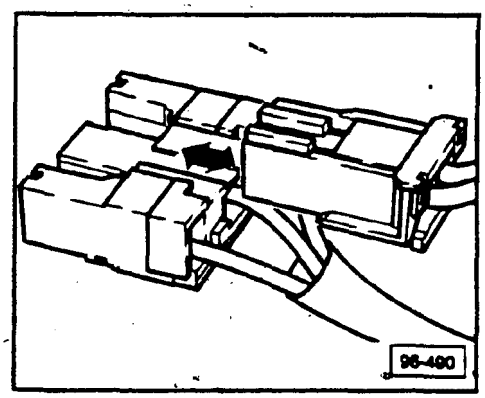

CAUTION

Do not remove tie-wraps after completing repair.

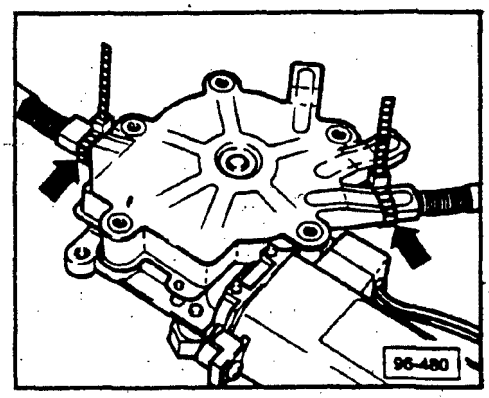

Window regulator motor/replacing

Note

Before replacing window regulator motor, check window switch, electrical wiring and mechanical portion of regulator assembly for proper operation.

Parts required

Audi 80/90

Description	m.y.	Part number	Quantity
Regulator motors *			
Front left	1988-	893 959 801 D	1
Front right	1988-	893 959 802 D	1

* Rear left/right window regulator motors cannot be replaced.

- remove door trim panel
- remove inner door panel
- remove regulator mounting bolts, and remove regulator from inner door panel
- pull off terminal connector for regulator motor (**arrow**)

- with regulator removed from door assembly clamp housing cover and plastic bearing cover together with tie-wraps as shown (**arrows**)

C-9

cardiagn.com

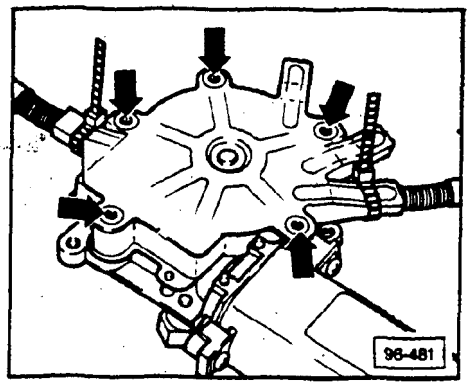

- remove mounting bolts securing motor to drive cable housing (**arrows**)

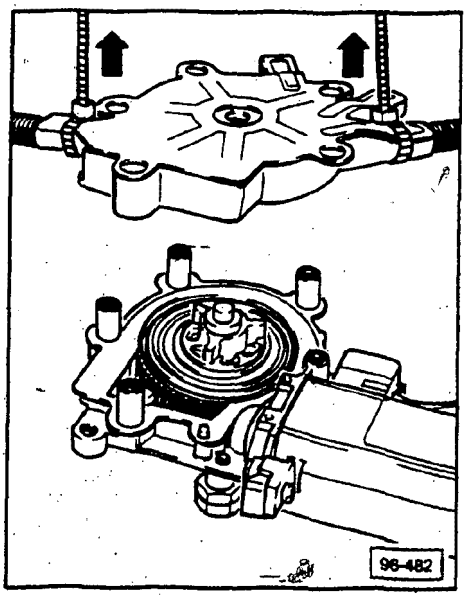

- using a rocking motion, carefully separate drive cable and cable spool from motor
  - do not damage mating surface

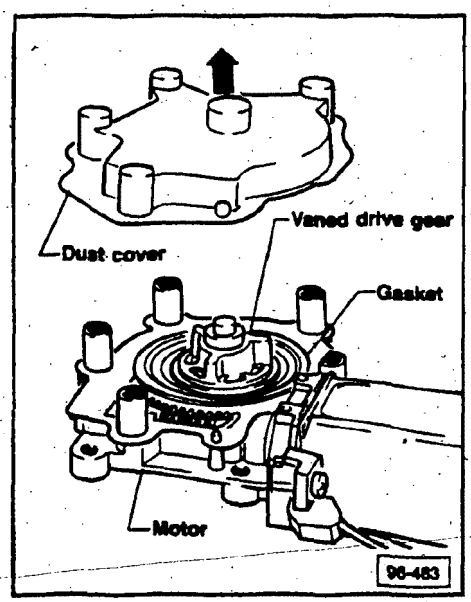

- remove plastic dust cover from new regulator motor
  - three vaned plastic drive gear and gasket remain on motor

cardiagn.com

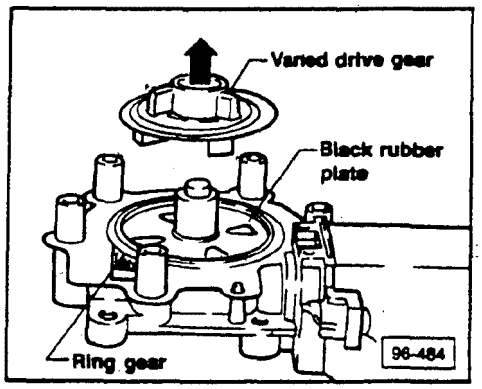

- carefully lift vaned drive gear from new regulator motor (**arrow**)
  - black rubber plate and ring gear **stay** inside motor housing

CAUTION

Vanes must fit securely into drive cable housing.

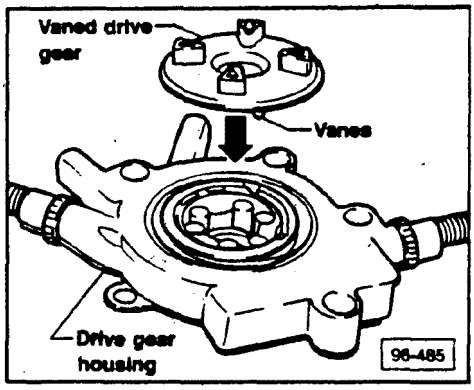

- insert vaned drive gear into drive cable housing (**arrow**) as shown

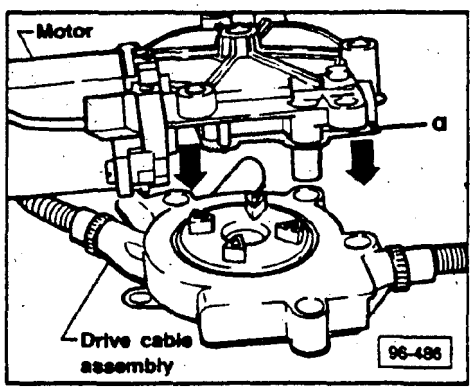

- reinstall new regulator motor to drive cable assembly
  - apply slight amount of grease to secure gasket **a** when installing

cardiagn.com

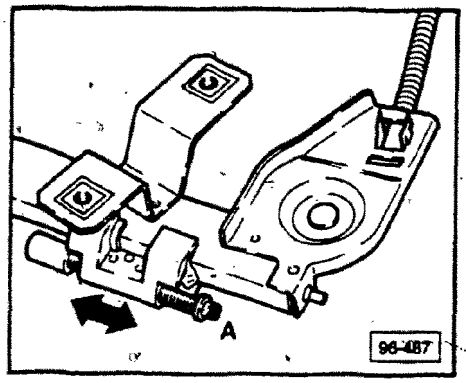

- if regulator motor and cable drive cannot be fitted together move cable carrier slightly (**arrow**)
  - do not turn screw **A** for upper window stop

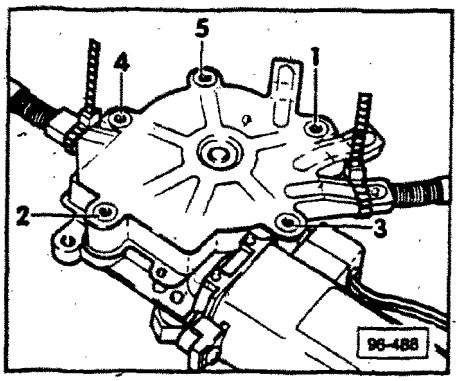

- reinstall and tighten mounting bolts diagonally in numerical order as shown
  - 3 Nm (2.2 ft lb)
- cut off excess length of tie-wraps to prevent getting caught in window regulator

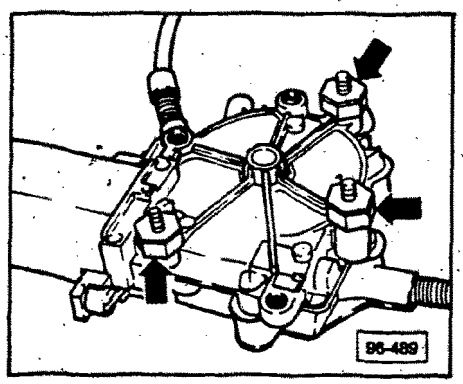

- remove rubber hex bushings from old motor (**arrow**) and reinstall on new motor
- reinstall window regulator and door panel
- test window for proper function

cardiagn.com

Window lifter pivot, repairing

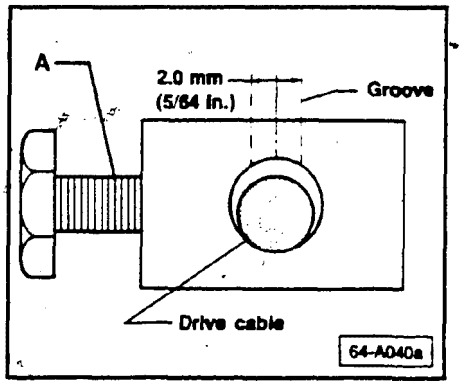

- modify two swivel pins, Part Number **111 129 921** by cutting a 2.0 mm (5/64 in.) groove in middle (as shown) with a tungsten carbide rod saw or equivalent
  - coat screw **A** with Loctite

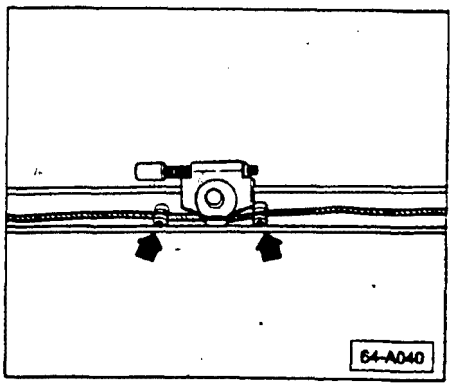

- install lug in cable guide
- insert modified swivel pins on both sides of cable guide (**arrows**)

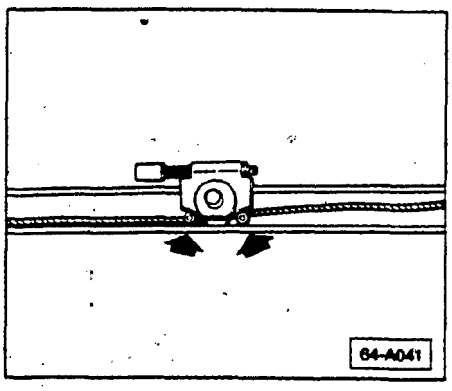

- move pins (**arrows**) up to cable guide, and tighten screws
- check window regulator for proper function

cardiagn.com

CAUTION

Part numbers are for reference only. Always check with your Parts Department for latest parts information.

CAUTION

Disassemble window regulator assembly on clean work surface.

NO dirt or dust must enter motor.

Relubricate with grease **G 000 450 02** or equivalent as required.

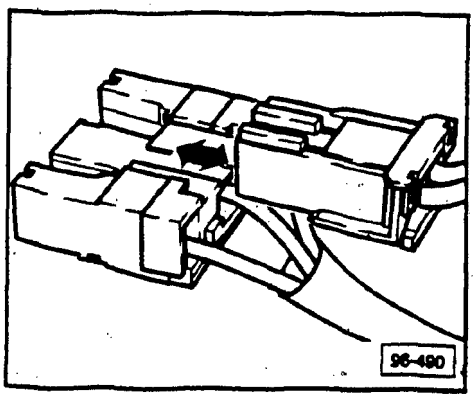

CAUTION

Do not remove tie-wraps after completing repair.

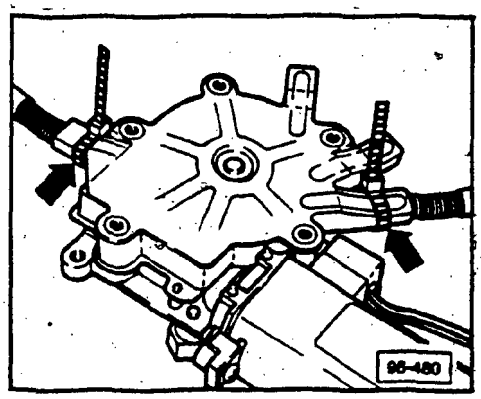

Window regulator drive cable assembly, replacing

Note

Before replacing window regulator motor, check window switch, electrical wiring and mechanical portion of regulator assembly for proper operation.

Parts required

Audi 80/90

Description	m.y.	Part number	Quantity
Regulator drive cable assembly★			
Front left	1988-	893 837 397B	1
Front right	1988-	893 837 398B	1

★ Rear left/right window regulator motor drive cable assembly cannot be replaced.

- remove door trim panel
- remove inner door panel
- remove regulator mounting bolts, and remove regulator from inner door panel
- pull off terminal connector for regulator motor (**arrow**)

- with regulator removed from door assembly
- clamp housing cover and plastic bearing cover together with tie-wraps as shown (**arrows**)

cardiagn.com

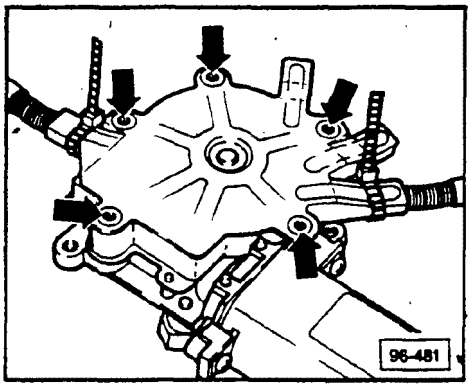

- remove mounting bolts securing motor to drive cable housing (**arrows**)

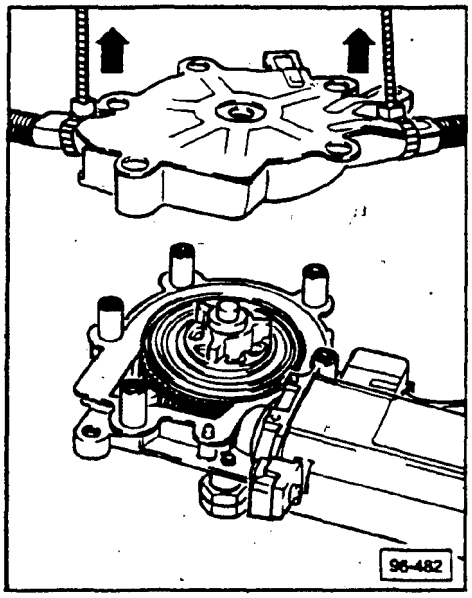

- using a rocking motion, carefully separate drive cable and cable spool from motor
  - do not damage mating surface

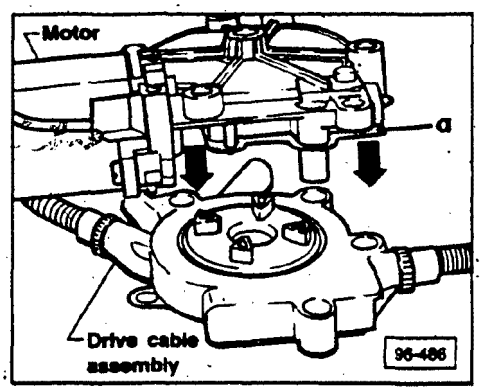

- reinstall replacement window regulator drive cable assembly onto motor
  - apply slight amount of grease to secure gasket **a** when installing

cardiagn.com

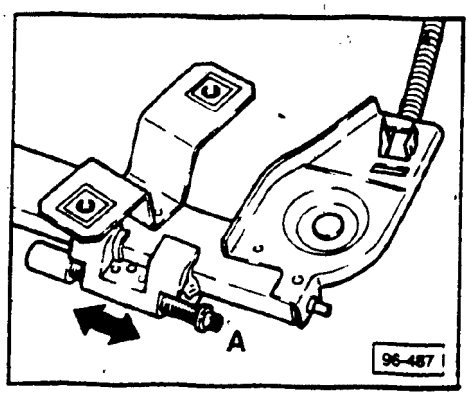

- if regulator motor and cable drive cannot be fitted together move cable carrier slightly (**arrow**)
- measure stop screw **A** on old regulator assembly and adjust stop screw on replacement regulator to same length

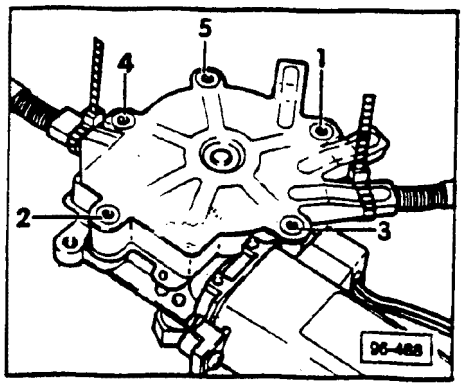

- reinstall and tighten mounting bolts diagonally in numerical order as shown
  - 3 Nm (2.2 ft lb)
- cut off excess length of tie-wraps to prevent getting caught in window regulator

Note

Before installing window regulator into vehicle, test function by connecting window regulator to 12V power supply, and operate in both directions.

- reinstall window regulator and door panel
- test window for proper function

cardiagn.com

CONTINUED IN THE

BEGINNING OF NEXT ROW

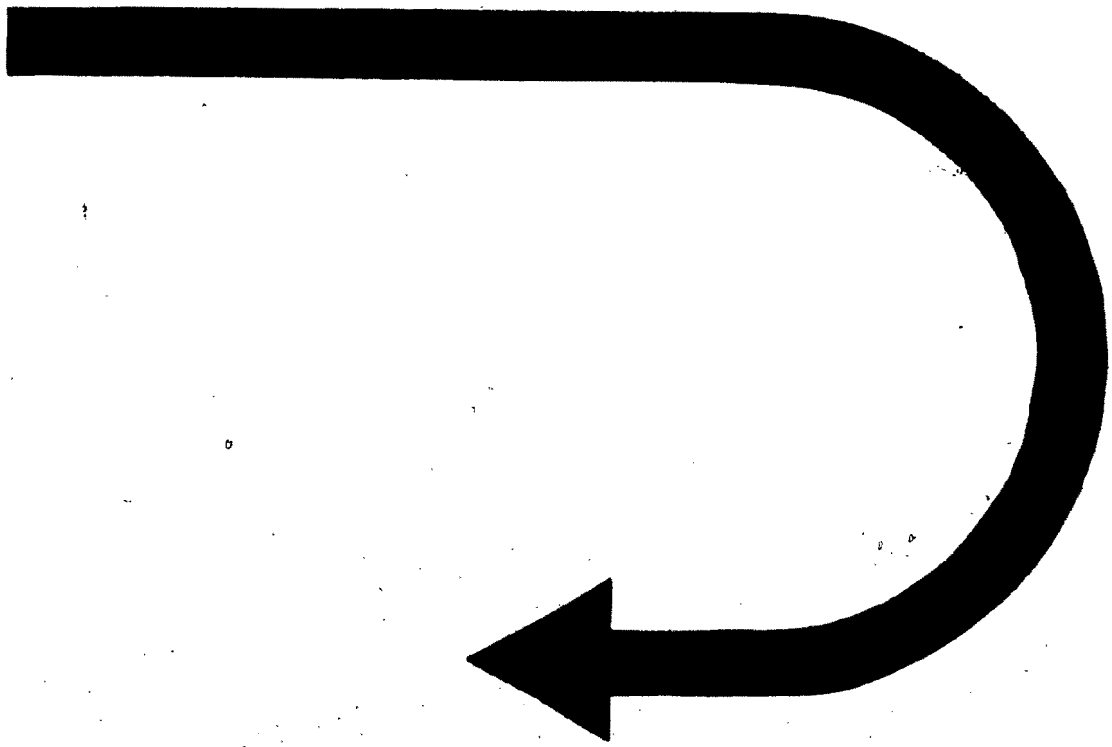

cardiagn.com

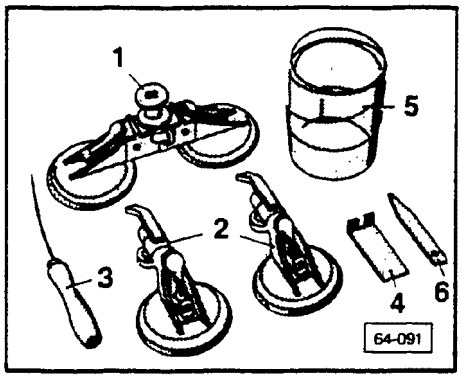

Window replacing, general information

To replace windshield, rear window or side windows, the following tools and materials are required.

Tool Kit VW 1474

1 — Reel
2 — Relay roller with holder
3 — Awl
4 — Guide rail
5 — Protective sheeting
6 — Wedge

Use protective sheeting **VW 1474/7** to protect instrument panel.

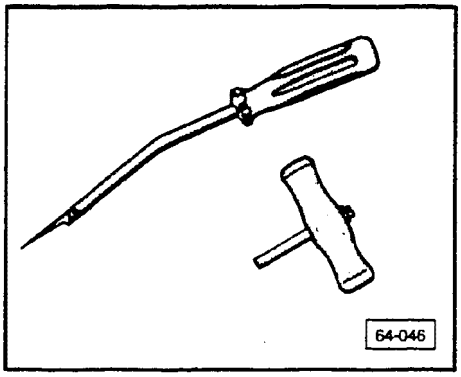

Tool kit VW 1351

- for removing broken windshields, rear windows and **broken** or **unbroken** side windows

CAUTION

To prevent paint damage, mask perimeter of windshield, rear and side windows with cloth duct tape.

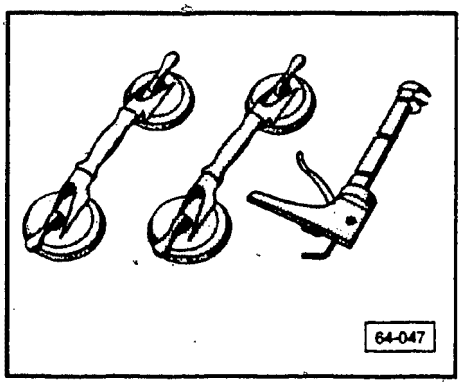

- caulking gun
- double suction pad (only for rear window, windshield)
- protective goggles
- utility knife
- protective gloves (leather)
- cloth or duct tape

cardiagn.com

Parts required

> **CAUTION**
>
> Part numbers are listed for reference only. Always consult with the Parts Department for latest information.

Description	Part number	Quantity
center spacers for windshield	895 845 237 443 845 237D	1
adjusting wedges for rear window	839 845 631A	2
cutting wire 50m (150 ft) roll	443 845 955	1
adhesive kit (vehicles **with** airbag)	D 004 300 03	1
adhesive kit (vehicles **without** airbag)	D 004 300 04	1
Mixing rod (For use with adhesive kit D 004 300 04)	D 009 700	1

Hardening of adhesive sealing compound

Vehicles without airbag

- vehicle **must** stand at least one hour, at room temperature of 20°C (68°F) and relative humidity of 65-70% before allowing vehicle to be driven

Vehicles with airbag

- vehicle must stand at least three hours, at room temperature of 20°C (68°F) and relative humidity of 65-70% before allowing vehicle to be driven
- keeping the sealed/bonded area wet forms a skin that promotes hardening process

cardiagn.com

Surplus bonding/sealing compound, removing

> **CAUTION**
>
> When using any cleaning agent, follow all cautions and warnings listed on the containers.

- first use dry cloth to clean off painted areas
- excess adhesive sealing compound can be removed using a cleaning solvent such as supplied in repair kit
  - do not use cleaners which contain alcohol
- to clean plastic trim, let adhesive sealing compound harden two to three hours, then scrape off excess with plastic wedge

Sealing leaks

> **CAUTION**
>
> While adhesive sealant is hardening, avoid putting pressure on glass from inside car when cleaning around glass.

- water test window area before reinstalling moldings, trim or lip or rubber molding
- dry area around leaks with compressed air and clean
- apply adhesive sealant from outside to leak area between glass and flange then smooth over
- retest area for water leaks

Note

The small adhesive sealant cartridge **D 009 100 03** is recommended for resealing.

cardiagn.com

Windshield, removing

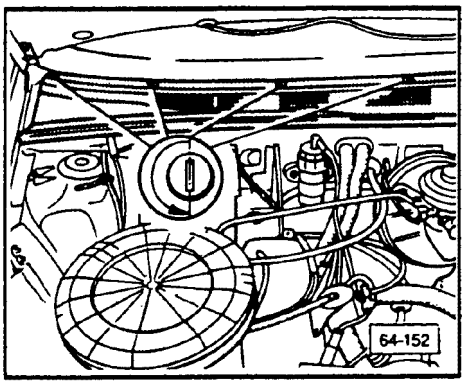

- remove outer/interior A-pillar trim (see Repair Group 70)
- remove beading from headliner
- remove windshield wipers
- remove plenum chamber cover (as shown)
  - turn clips 180°
- disconnect wiring for front antenna

WARNING

Always wear protective goggles and leather gloves when removing and installing windows.

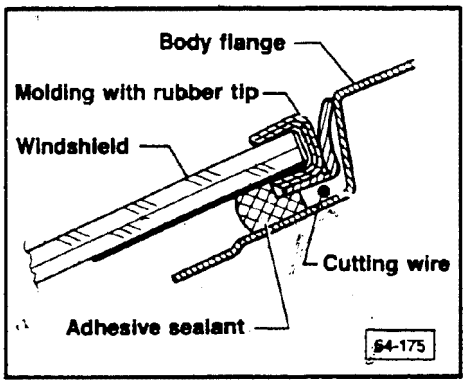

- remove inner rear-view mirror (see Repair Group 68)
- cut off approximately 8m (26 ft) cutting wire
- locate center of cutting wire
- on the outside, starting at top center of windshield, press cutting wire under rubber molding so wire runs completely around perimeter of windshield ending at bottom center

CAUTION

Do not bend or twist wire, otherwise wire will break when under tension.

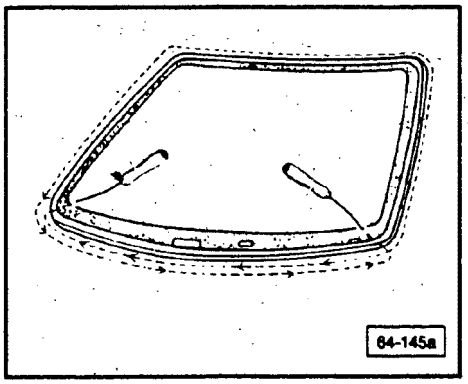

- from inside push awl through adhesive sealant at lower right corner (as shown) until awl eye is visible from outside
- turn awl slightly and thread in one end of wire
- bend over wire and pull through to inside of vehicle
- do same at lower left corner with other end of wire
- remove guide rail

cardiagn.com

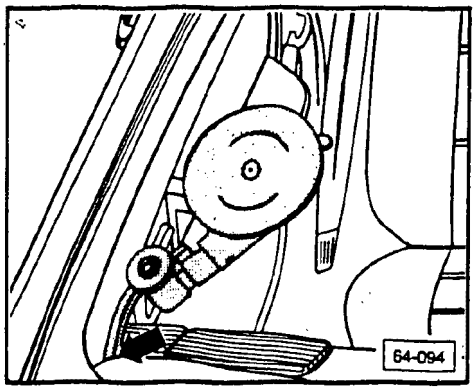

CAUTION

Ends of wire must be in adhesive sealant as close together as possible, but must not overlap, otherwise glass will break or wire will bend or twist.

- attach relay roller with holder into left and right lower corner of windshield
  - holder must support on dashboard (**arrow**)

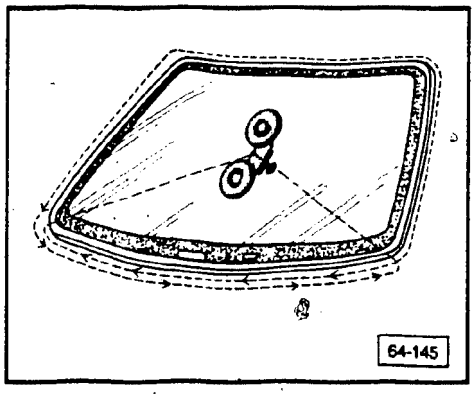

- attach reel (as shown) to center of windshield
- guide wire up from base of windshield and around relay rollers then thread ends into reel
- slightly tension cutting wire with reel and ratchet
- check that wire is placed correctly around corners and molding before cutting
- start cutting and continue cutting operation until relay rollers are clear

Note

If wire breaks in lower area, turn roller so there is a sharper cutting angle. Continue cutting with one wire up to A-pillar. In middle, if there still is approximately 30 mm (12 in.) adhesive compound left, turn roller and continue cutting until all adhesive is removed.

- remove relay rollers
- cut out windshield completely

Note

If cutting wire breaks several times (wire gets caught on the windshield flange) and can no longer be fitted on the reel (wire too short), cut remaining area with tool **VW 1351** (pulling handle and mounting).

CAUTION

Depending on extent of paint damage in removing windshield, touch-up or repaint as required.

cardiagn.com

Windshield, installing

If windshield is to be reused, cut away enough old adhesive sealant with utility knife around glass and body flange to give smooth uniform surface.

If body repair has been done, body flange must be cleaned and primed with primer from adhesive kit.

- attach molding around windshield
- clean edge of glass approximately 30mm (1-11/64 in) wide with cleaning solvent and wipe dry with lint-free cloth

Ceramic black-out band around windshield is not primer. Before applying adhesive sealant prime this area with primer **D 009 200**.

- cut applicator head
- insert felt into applicator head
- thoroughly shake bottle of primer (approximately 30 seconds) and fill applicator bottle
- attach application head onto bottle
- apply primer **a** = 17mm (43/64 in) wide evenly all around edge of windshield in **one** continuous operation. Ensure applicator head is always completely saturated
  - drying time approximately 10 minutes

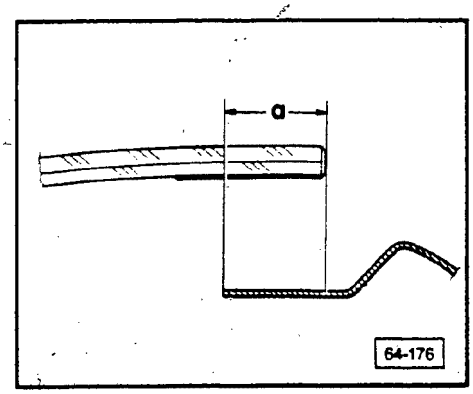

Note

Do not retouch strip of primer until it has dried completely.

WARNING

Adhesive used in bonded window glass installations, original or replacement, may give off toxic fumes when heated. Read container labels. **Ensure adequate ventilation.**

cardiagn.com

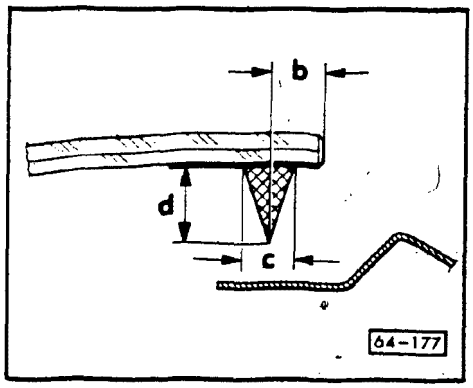

- apply adhesive sealant around windshield, making sure that the adhesive sealant touches the edge of the windshield

b = 8 mm (5/16 in)
c = 8 mm (5/16 in)
d = 12 mm (15/32 in)

Note

Reduce the height of adhesive by the thickness of the adhesive remaining on the windshield or the windshield body flange.

cardiagn.com

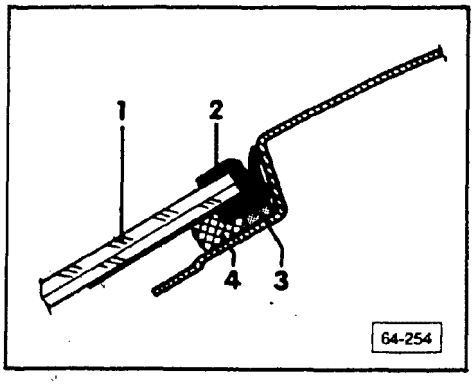

Center spacers, installing

Top

- remove paper backing from spacer (self adhesive)
- apply spacer in center of trim strip (as shown)
  1 — windshield
  2 — trim strip
  3 — spacer
  4 — adhesive bead

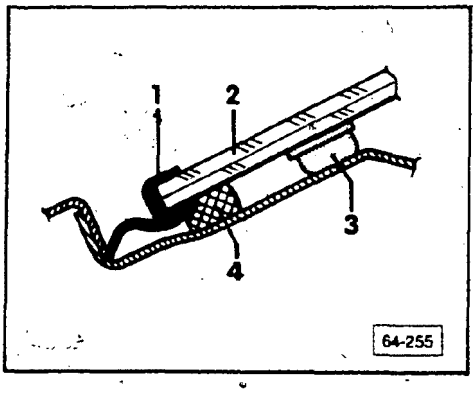

Bottom

- remove paper backing from spacer (self adhesive)
- apply spacer on center of windshield, 25 mm (1.0 in.) from lower edge of glass
  1 — trim strip
  2 — windshield
  3 — spacer
  4 — adhesive
- place windshield into position using two double suction pad holders
- align windshield at the sides
- insert adjusting wedges **1** into corners of windshield (as shown).
  - wedges do not have to be removed

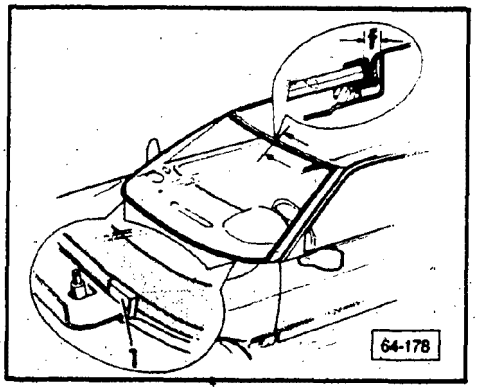

- align windshield gap **f** at top to 4-5 mm (5/32-13/64 in.)
- lightly press windshield into place
- press windshield at top until windshield molding is flush with roof
- test for leaks
- clean off surplus adhesive sealant from body and glass
- reinstall trim piece

CAUTION

Vehicles **with** airbags **must** stand at least three hours, at room temperature of 20°C (68°F) and a relative humidity of 65-70% before allowing vehicle to be driven.

Vehicles **without** airbags **must** stand for at least one hour.

D-9

cardiagn.com

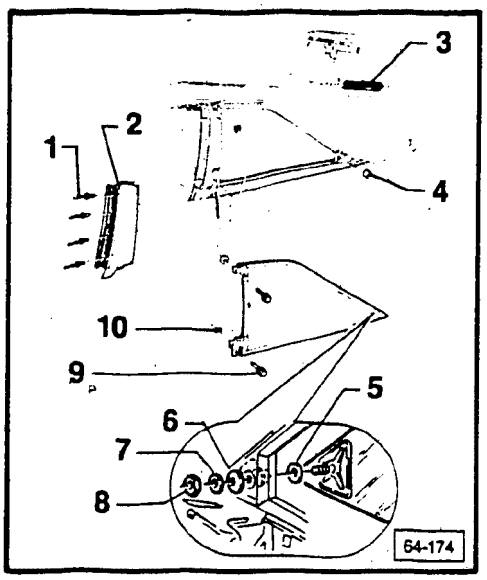

Side window, removing

- remove C-pillar trim, automatic seat mounting, see Repair Group 70
- remove door weatherstrip in area of B-pillar trim
- remove outer B-pillar trim **2**, see Repair Group 66

1 — pop-rivet
2 — B-pillar trim, outer
3 — support
4 — sleeve
5 — washer
6 — seal
7 — washer
8 — lock nut
5 Nm (3.7 ft lb)
9 — screw/washer
10 — support
- remove protective covering prior to installing

Side window, installing

Install window in reverse order of removal, noting the following:
- test window for water leaks

cardiagn.com

THIS FRAME INTENTIONALLY LEFT

BLANK

cardiagn.com

Power window, troubleshooting

Note
Refer always to appropriate wiring diagram.

Test conditions

- battery **OK**

Tools required

- multimeter **US 1119**
- LED tester **US 1115**
- test adaptor **VW 1594**
- sun **VAT 40** or **VAT 60** or equivalent with current test lamp

No window operates

- switch ignition **ON**
- operate driver window switch
- listen for "click" sound from control unit
  - indicates wires, relay, power supply to control unit **OK**

click audible	no "click" audible
Go to Ⓐ page 64.52	

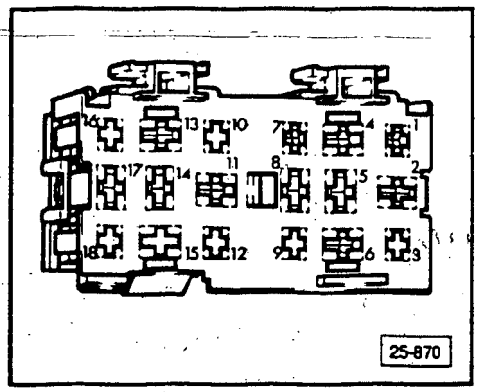

No power to control unit

- remove left lower instrument panel cover
- pull control unit from auxiliary relay panel
- set multimeter to volt scale and connect to terminals **14** and **2**
  - must be **12V**
- connect and read between terminals **14** and **1**
- turn ignition **ON**
  - must be **12V** minimum

NOT OK	OK window does not operate
■ repair break in electrical wiring or ■ replace circuit breaker (see 64.59)	Go to Ⓐ page 64.52

End

D-12

cardiagn.com

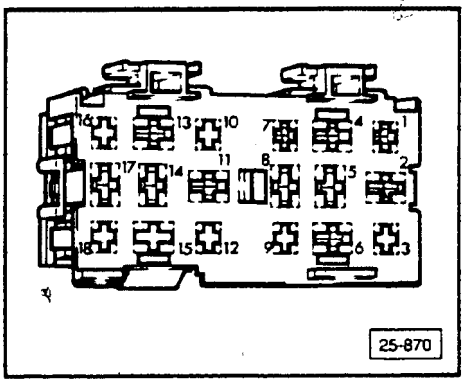

(A)

Checking front door contact switches

- switch ignition **OFF**
- passenger door open
- multimeter **US 1119** set to ohms scale
- connect multimeter to terminals **14** and **3**
  - must be **0 ohms**
- press right front door contact switch
  - must be ∞ **ohms** (infinite)
- driver door open
- connect multimeter between terminals **14** and **6**
  - must be **0 ohms**
- press left front door contact switch
  - must be ∞ **ohms** (infinite)

NOT OK	OK
■ repair break in electrical circuit → End	■ reinstall control unit → Go to (B) page 64.54

cardiagn.com

One window not working

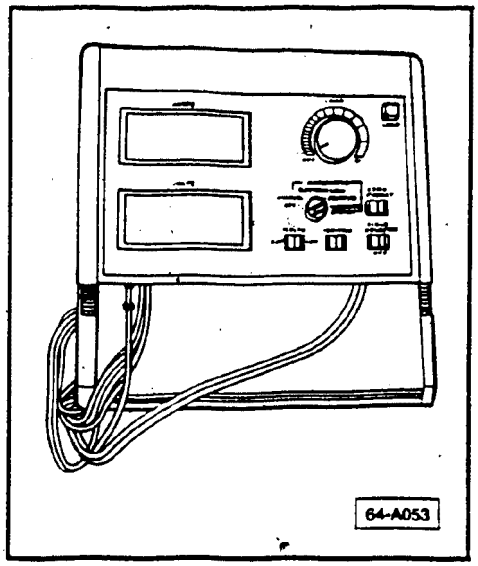

Window regulator current draw, checking (installed)

- connect volt/amperage tester **Sun VAT 40**, or **VAT 60** or equivalent
  - **Sun VAT 60** shown
- connect inductive pick-up to battery ground strap
- switch ignition **ON**
- press operating switches for window regulators one after the other (open or close)
- measure current draw during window switch operation
  - must be **6-12A** (during window travel)

Note
The tester will always indicate a certain current reading when the ignition is switched on; this reading will vary according to operating conditions and the type of model and equipment, to correct:

- zero tester to compensate for other electrical consumers
- after glass is at top or bottom and switch depressed, current must be between **15-20A (stall current)**

specified readings **NOT** obtained; window motor not drawing current	tester registers stall current and window glass does not move

NOT OK		current **OK** window does not move
greater than 20A	0 Amp	
or Breaker Trips		

- or Breaker Trips → locate short circuit to ground according to wiring diagram → **OK** → window regulator motor and circuit **OK** → End
- 0 Amp → Go to Ⓑ page 64.54
- current OK, window does not move → Go to page 64.57

cardiagn.com

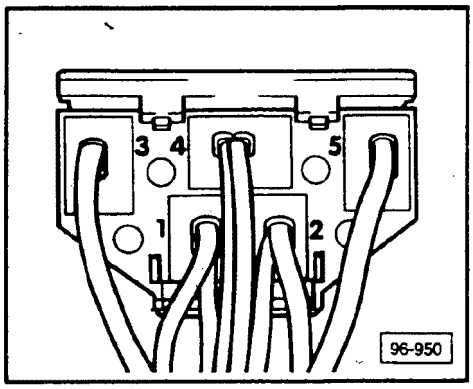

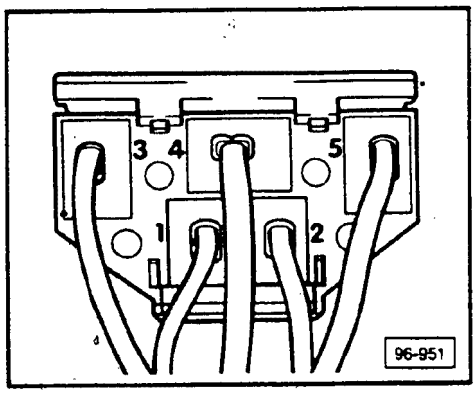

Ⓑ

Window switch, checking

- see illustration 96-950 for driver door window switch, for passenger door switch see 96-951

- remove switch panel from door trim panel
- switch ignition **ON**
- set multimeter **US 1119** to volts scale
- connect and read multimeter between terminals **4** (+) and **3** (−); then terminals **4** (+) and **5** (−)
  - must read approximately **12V**

NOT OK	OK, window inoperative
check power and ground wires of switch according to current flow diagram	Go to Ⓒ window switch **ON**, checking page 64.55

cardiagn.com

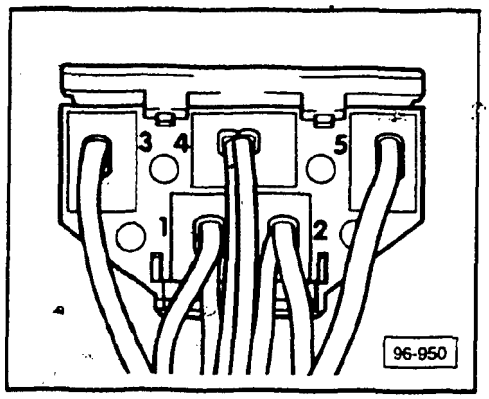

Ⓒ

Window switch ON, checking

- see illustration 96-950 for driver door window switch, for passenger door windows see 96-951
- ignition **ON**
- window switch panel removed from door trim panel
- multimeter **US 1119** set to volts

■ connect and read multimeter between terminals **3** (−) and **2** (+) while lowering window (holding switch in window down position)
- must be approximately **12V**

■ connect and read multimeter between terminals **5**(−) and **1** (+) while raising window (hold switch in window raising position)
- must be approximately **12V**

Note

Window travel time should be approximately 8-10 seconds.

OK	NOT OK
Go to Ⓓ page 64.57	Go to Ⓔ page 64.59

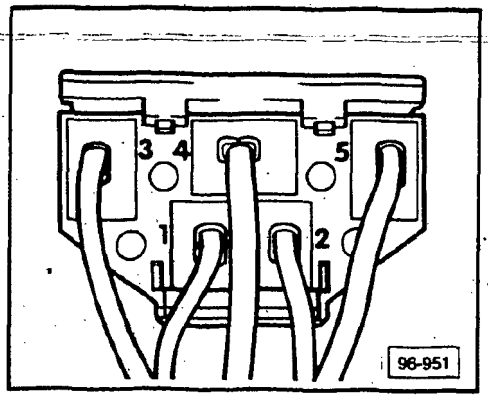

cardiagn.com

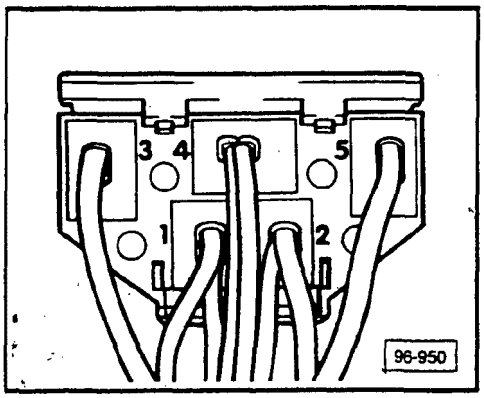

Driver's window switch, one-touch down function, (driver's door only)

- door window in up position

- turn ignition **ON**
- set multimeter **US 1119** to volts scale
- connect multimeter **US 1119** between terminals **3** (⊖) and **2** (⊕)
- touch window switch for driver's door and release, while observing multimeter
  - must be approximately **12V** as window lowers

Note

Window travel time should be approximately 8 to 10 seconds.

NOT OK	**OK** but window does not move
Go to page 64.51	Go to Ⓑ page 64.54

cardiagn.com

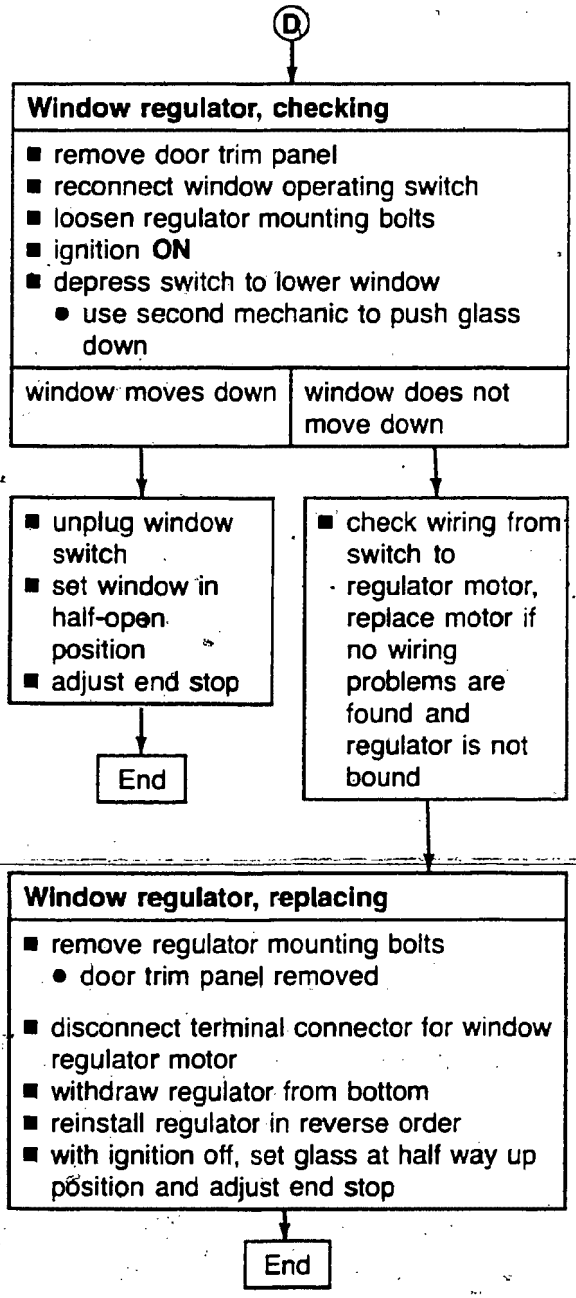

cardiagn.com

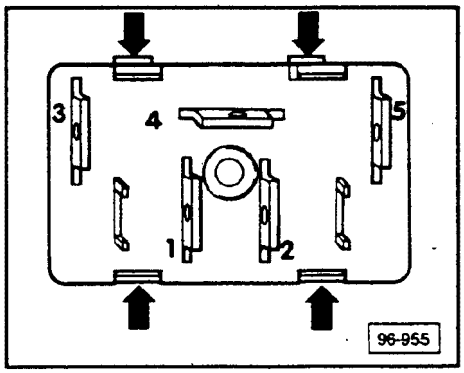

Window switches, replacing

- pry out from door trim panel
- pull off terminal connector

Driver's door control panel switches

- pry switch from panel at points shown (**arrows**)
- push switch out of panel from bottom

Right front, window switch

- pry out of door trim panel
- reinstall in reverse order, noting:
  - switches are pressed in until "click" is heard

cardiagn.com

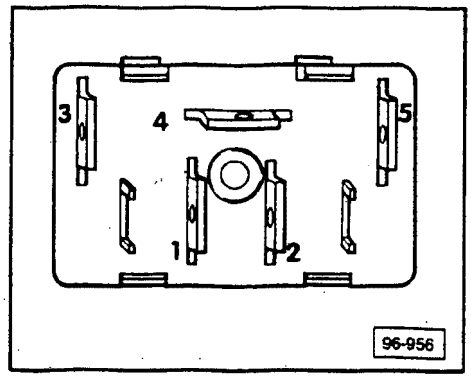

E

Window regulator switches, checking continuity

- remove switch
  - pry out
- disconnect terminal connector from switch
- set multimeter **US 1119** to ohm scale and read between terminals **5** and **2**, then **3** and **1**
  - must be **0 ohms**
- connect multimeter to terminals **4** and **2**
  - must be ∞ **ohms** (infinite)
- operate switch to lower window
  - must be **0 ohms**
- connect multimeter to terminals **4** and **1**
  - must be ∞ **ohms** (infinite)
- operate switch to raise window
  - must be **0 ohms**

NOT OK	OK
■ replace switch → End	End

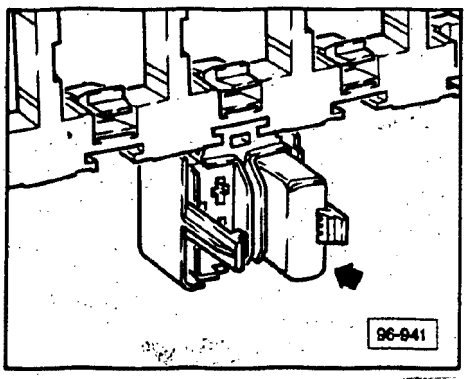

Circuit breaker, location

On left side of auxiliary relay panel (**arrow**).

cardiagn.com

CAUTION

Part numbers are for reference only. Always check with your Parts Department for latest parts information.

CAUTION

Disassemble window regulator on clean work surface.

NO dirt or dust must enter motor.

Relubricate with grease **G 000 450 02** or equivalent as required.

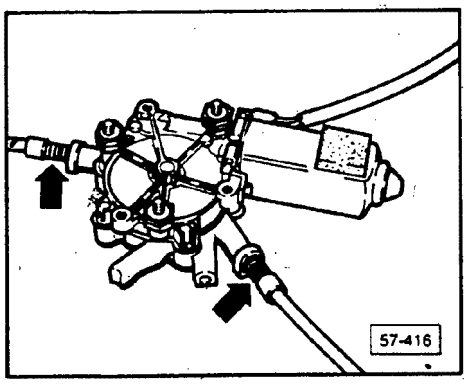

CAUTION

Do not remove tie-wraps after completing repair.

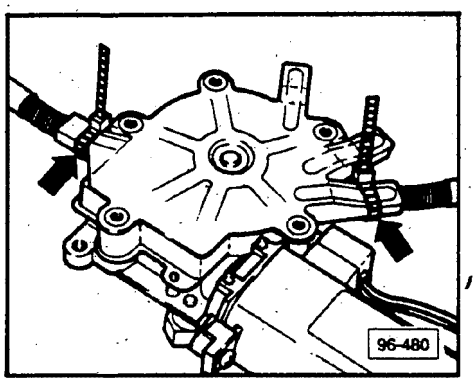

Window regulator motor, replacing

Note

Before replacing window regulator motor, check window switch, electrical wiring and mechanical portion of regulator assembly for proper operation.

- remove door trim panel
- raise door glass almost to top
- remove regulator mounting bolts

- check and adjust window regulator drive cable for equal tension on both sides of motor
  - check tension of springs (**arrows**)
- cut off tie wraps for mounting cables, wiring harness
- remove regulator motor from drive cable
- pull motor downward and turn 180°

- clamp housing cover and plastic bearing cover together with tie-wraps as shown (**arrows**)

cardiagn.com

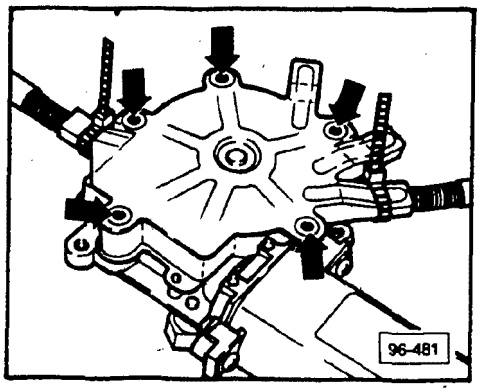

- remove mounting bolts securing motor to drive cable housing (**arrows**)

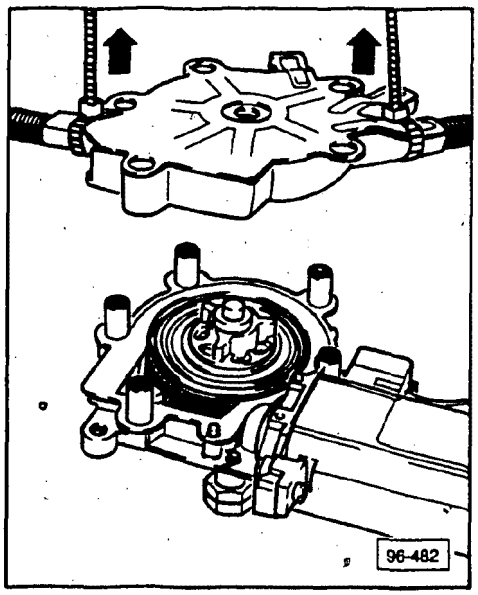

- using a rocking motion, carefully separate drive cable and cable spool from motor
  - do not damage mating surface
  - do not remove cable spool from drive cable housing

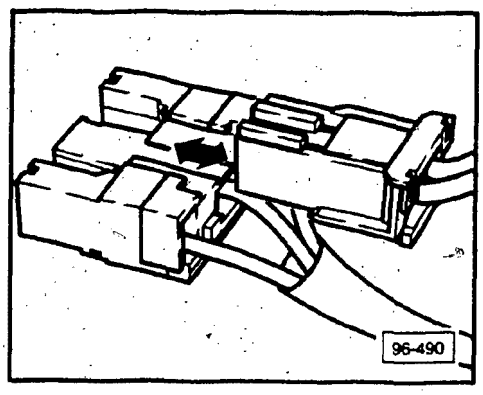

- pull off terminal connector for regulator motor (**arrow**)
- remove regulator motor from door assembly

cardiagn.com

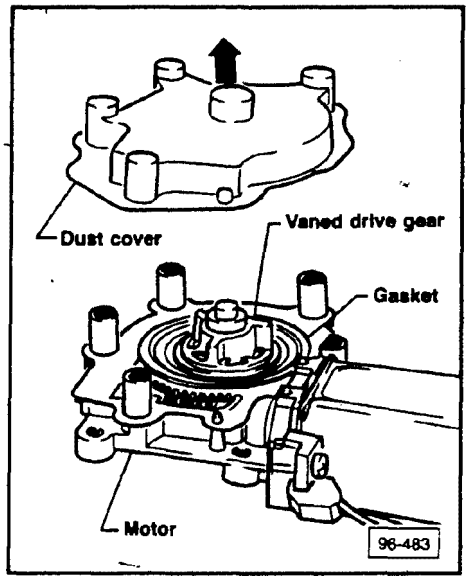

- remove plastic dust cover from new regulator motor
  - three vaned plastic drive gear and gasket remain on motor

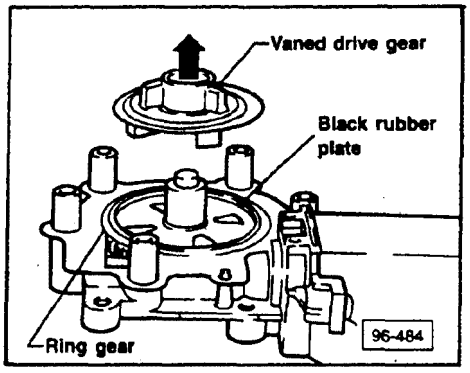

- carefully lift vaned drive gear from new regulator motor (**arrow**)
  - black rubber plate and ring gear **stay** inside motor housing

CAUTION

Vanes must fit securely into drive cable housing.

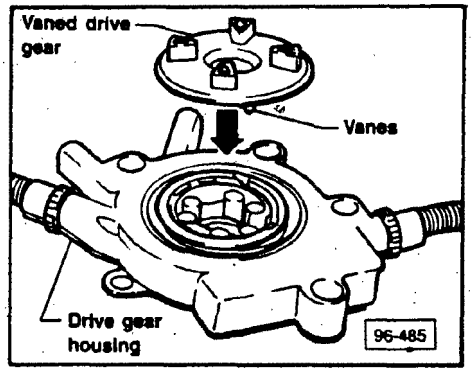

- insert vaned drive gear into drive cable housing (**arrow**) as shown

cardiagn.com

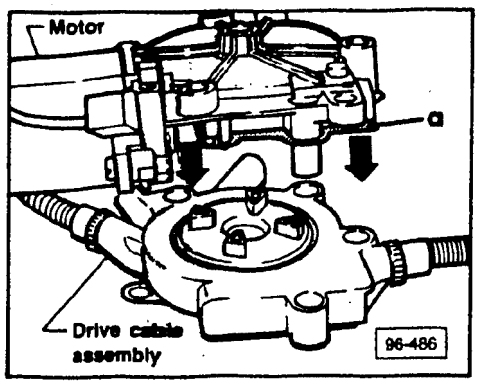

- reinstall new regulator motor to drive cable assembly
  - apply slight amount of grease to secure gasket **a** when installing
  - 4 tabs on vaned drive gear must engage openings in motor
- if regulator motor and cable drive cannot be fitted together move door glass up and down
  - 2 mechanics may be necessary

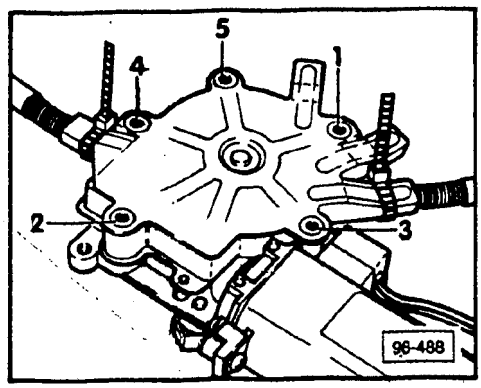

- reinstall and tighten mounting bolts diagonally in numerical order as shown
  - 3 Nm (2.2 ft lb)

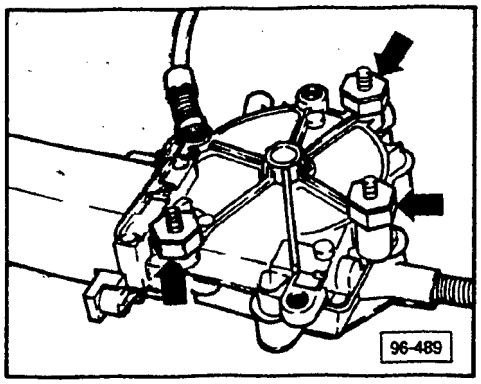

- remove rubber hex bushings from old motor (**arrow**) and reinstall on new motor
- cut off excess length of tie-wraps to prevent getting caught in window regulator
- reinstall window regulator
- secure mounting cables and wiring harnesses with new tie-wraps
- reconnect electrical connector
- reinstall door panel trim
- test window for proper function

cardiagn.com

Index

B-pillar trim
- assembly 66.4

Front license plate bracket
- installing 66.16

Mirror glass
- removing/installing 66.3

Outside mirror
- removing/installing 66.3

Protective moldings
- assembly 66.5
- removing/installing 66.7

Radiator grille
- removing/installing 66.2

Rear spoiler
- changing gas strut 66.15
- installing on replacement lid 66.12
- removing installing 66.12

Rocker panel moldings
- assembly 66.8

Roof trim molding
- assembly 66.9
- installing 66.11
- removing 66.10

Side window exterior molding
- removing/installing 66.11

Wheel house liner
- removing/installing 66.2

Coupe

A-pillar trim
- assembly 66.20
- removing/installing 66.21

B-pillar trim
- assembly 66.22
- removing/installing 66.23

Door sill trim
- assembly 66.28

Front license plate trim
- assembly 66.29

Outside mirror
- installing 66.18
- removing 66.17

Outside mirror glass
- installing 66.19
- removing 66.18

Protective moldings
- assembly 66.26

Radiator grille
- removing/installing 66.17

Rocker panel moldings
- assembly 66.27

Roof trim moldings
- assembly 66.24
- removing/installing 66.25

Wheel house liner
- removing/installing 66.17

cardiagn.com

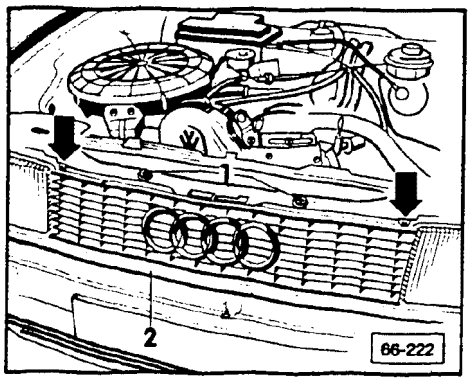

Radiator grille, removing/installing

Removing

- remove Phillips screws **1**
- push down retaining clips (**arrows**) with screwdriver
- pull radiator grille up and away from front panel **2**

Installing

Install in reverse order of removal. Note the following:

- retaining tabs from radiator grille must fit behind front panel **2**

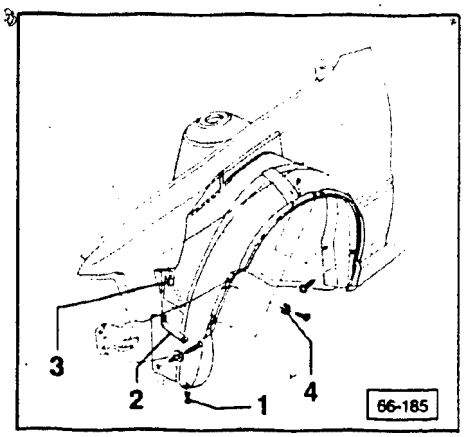

Wheel house liner, removing/installing

Removing

- unclip corners of bumper from guides at side (see Repair Group 63)
- pry out expanding nut **1**
- remove bracket **2** on one side
- remove plastic nut **3**
- remove Phillips screws, note clip **4** on fender flange
- pull fender away slightly at bottom
- pull wheel housing liner **over** studs
- press wheel housing liner inwards and off fender flange
- remove wheel house liner

Installing

- insert wheel housing lining towards A-pillar and press over fender flange
- reinstall all components in reverse order of removal

cardiagn.com

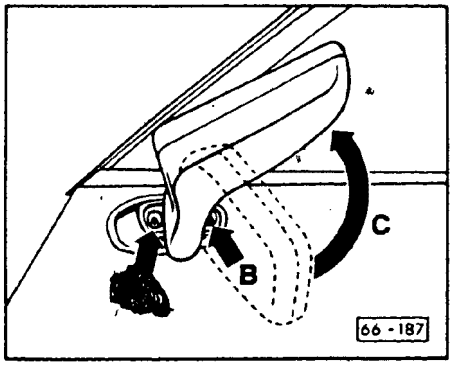

Outside mirror, removing/installing

Removing

- turn mirror (arrow **C**) to expose Phillips screws
- holding mirror, remove both screws (arrows **A, B**)
- disconnect electrical plug

Installing

Install in reverse order of removal

Outside mirror glass, removing/installing

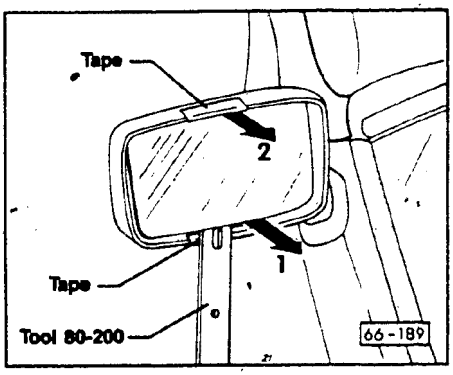

Removing

> **CAUTION**
>
> Wear protective gloves to prevent injury if glass breaks.
>
> Hold glass to prevent falling out.

- tape upper/lower edge of mirror housing
- using tool 80-200, pry mirror glass off at bottom **1** and top **2**
- hold mirror, unplug electrical connector

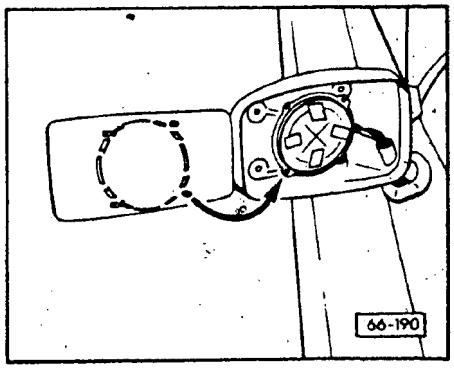

Installing

> **CAUTION**
>
> Apply pressure **only** at **center** of mirror glass.

- reconnect electric connector
- fit mirror onto guide pins (**arrow**)
- press into mirror housing
- check mirror for proper function

E-3

cardiagn.com

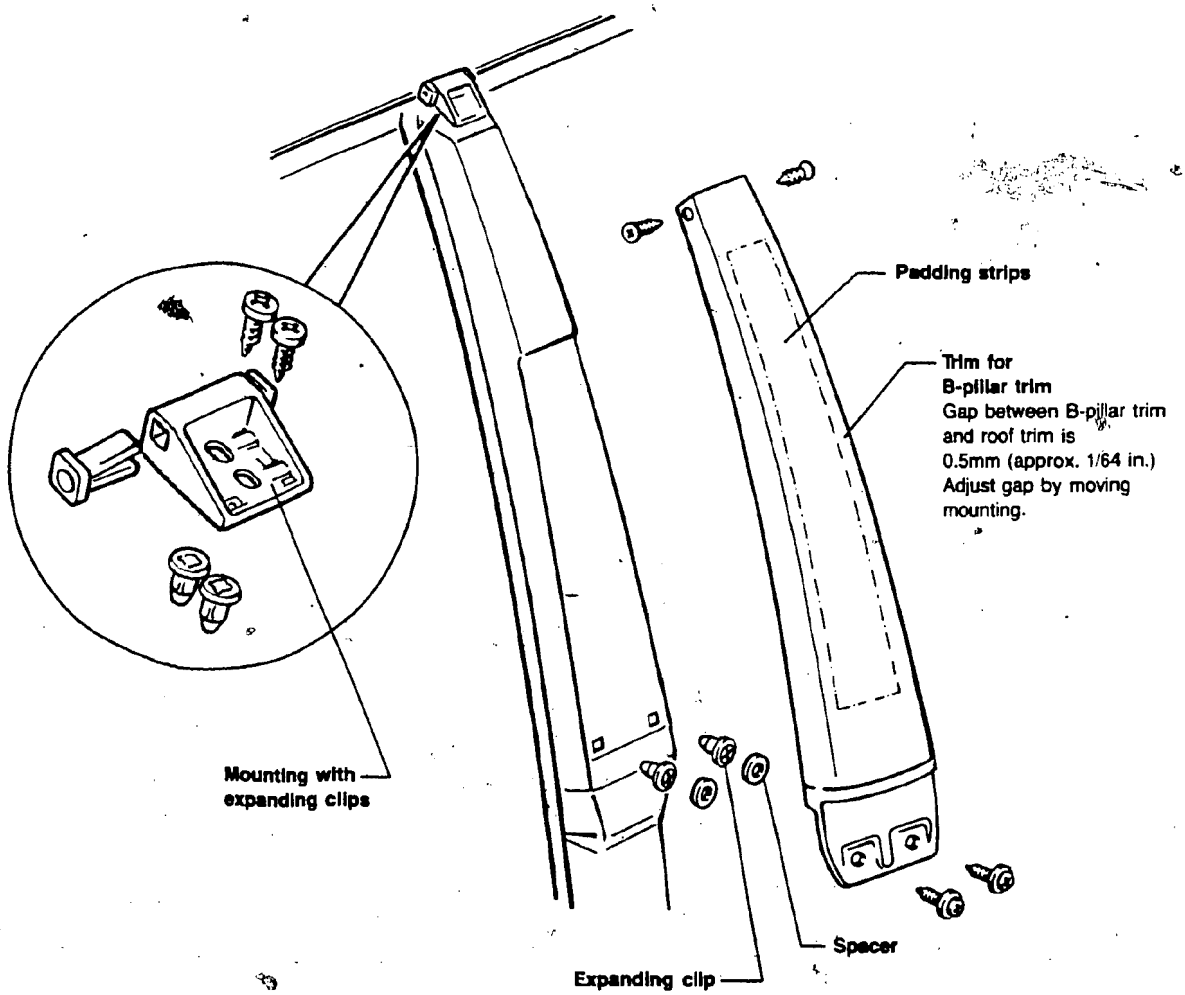

66-213

E-4

cardiagn.com

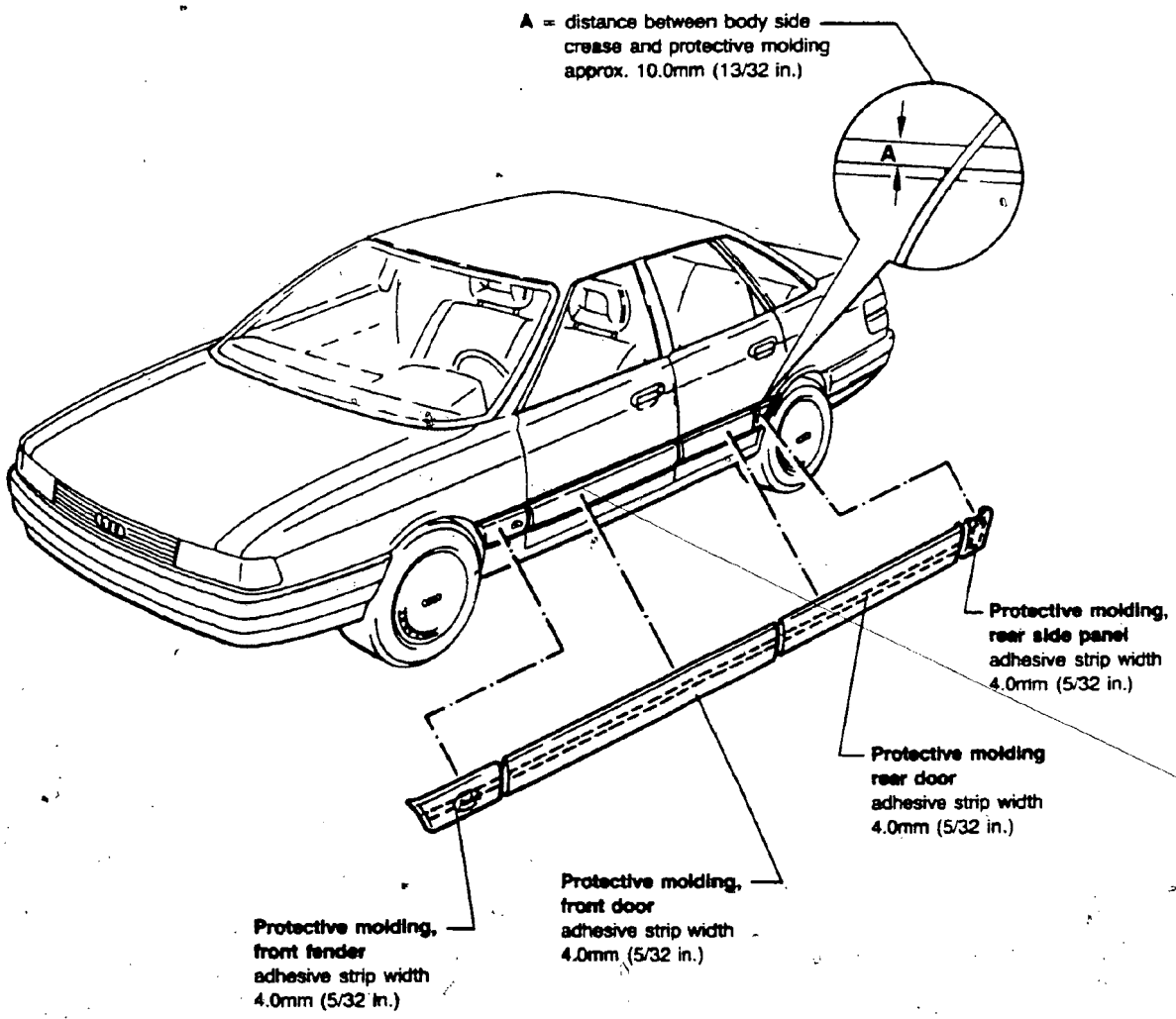

66-212

E-5

cardiagn.com

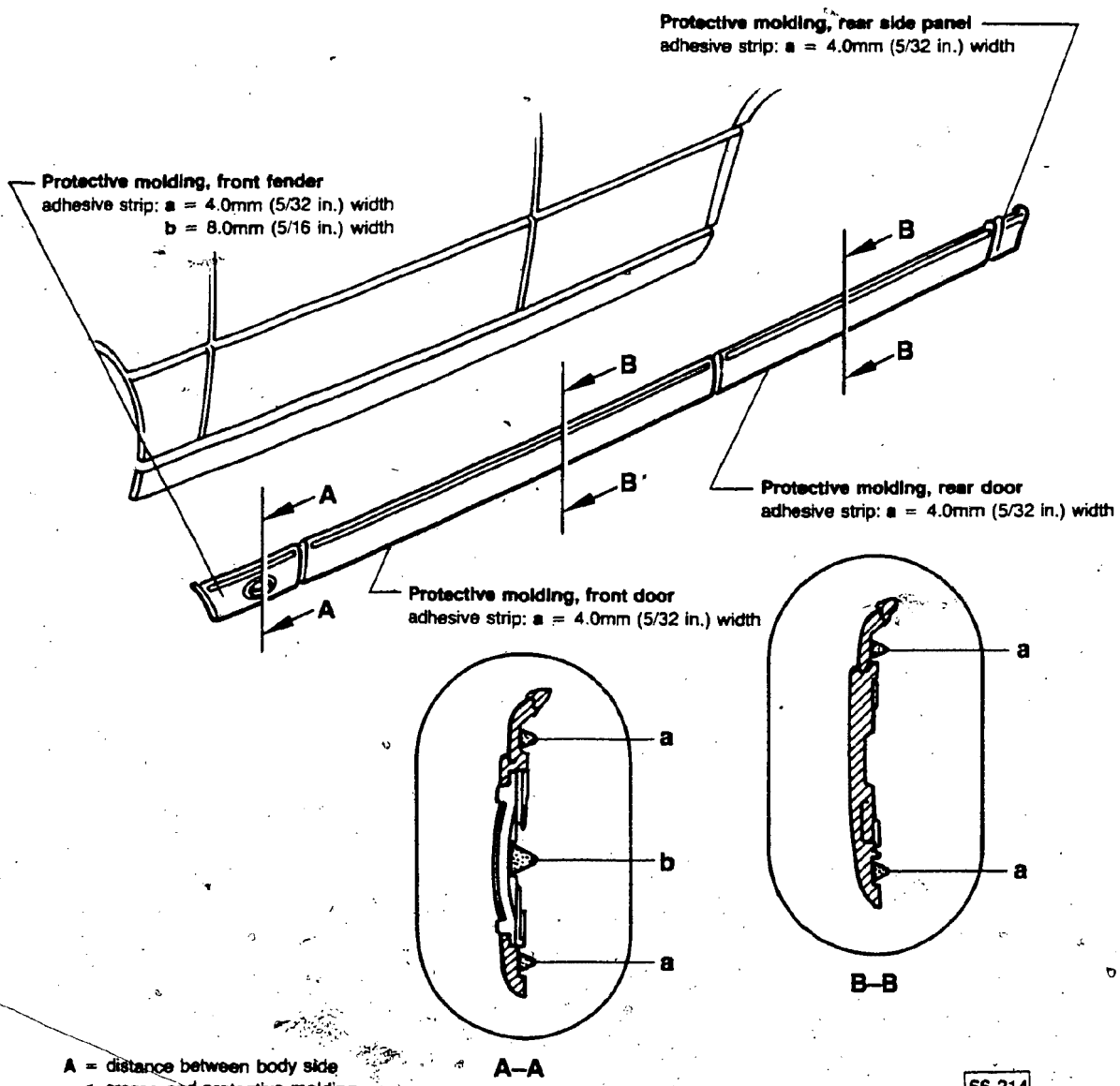

cardiagn.com

WARNING

Follow all application and safety instructions on labels.

CAUTION

Part numbers are for reference only. Always check with your Parts Department for latest parts information.

Protective moldings, removing/ installing

Removing

Protective moldings cannot be removed without being damaged.

- heat molding with hot air gun
- carefully pry off old molding

Installing

Installing molding on repainted sheet metal:

- clean adhesive areas on sheet metal with 3M® General Purpose Adhesive Cleaner or equivalent
- prime with primer from Adhesive kit **D 004 300 03** or equivalent, and allow primer to dry for 10 minutes

Installing moulding on plastic surface:

- clean adhesive areas with 3M® General Purpose Adhesive Cleaner or equivalent
- rub dry with lint free cloth
- prime area with primer from Adhesive kit **D 004 300 03** or equivalent, and allow to dry for 10 minutes
- cut back any remaining adhesive to depth of approximately 1.0mm (3/64 in.)
  - do not cut into paint or primer
- clean remaining adhesive with 3M® General Purpose Adhesive Cleaner or equivalent
- apply adhesive **D 009 100.03** or equivalent
- position molding
- press firmly to body
  - take special care at ends of moldings
- apply strips of fabric (cloth) tape to hold molding in position
- allow to dry 4 hours at 20°C (68°F)
- remove tape
- clean any residual adhesive from metal or plastic with dry cloth, followed by mineral spirits
  - allow residue on plastic to harden 2-3 hours before removing

cardiagn.com

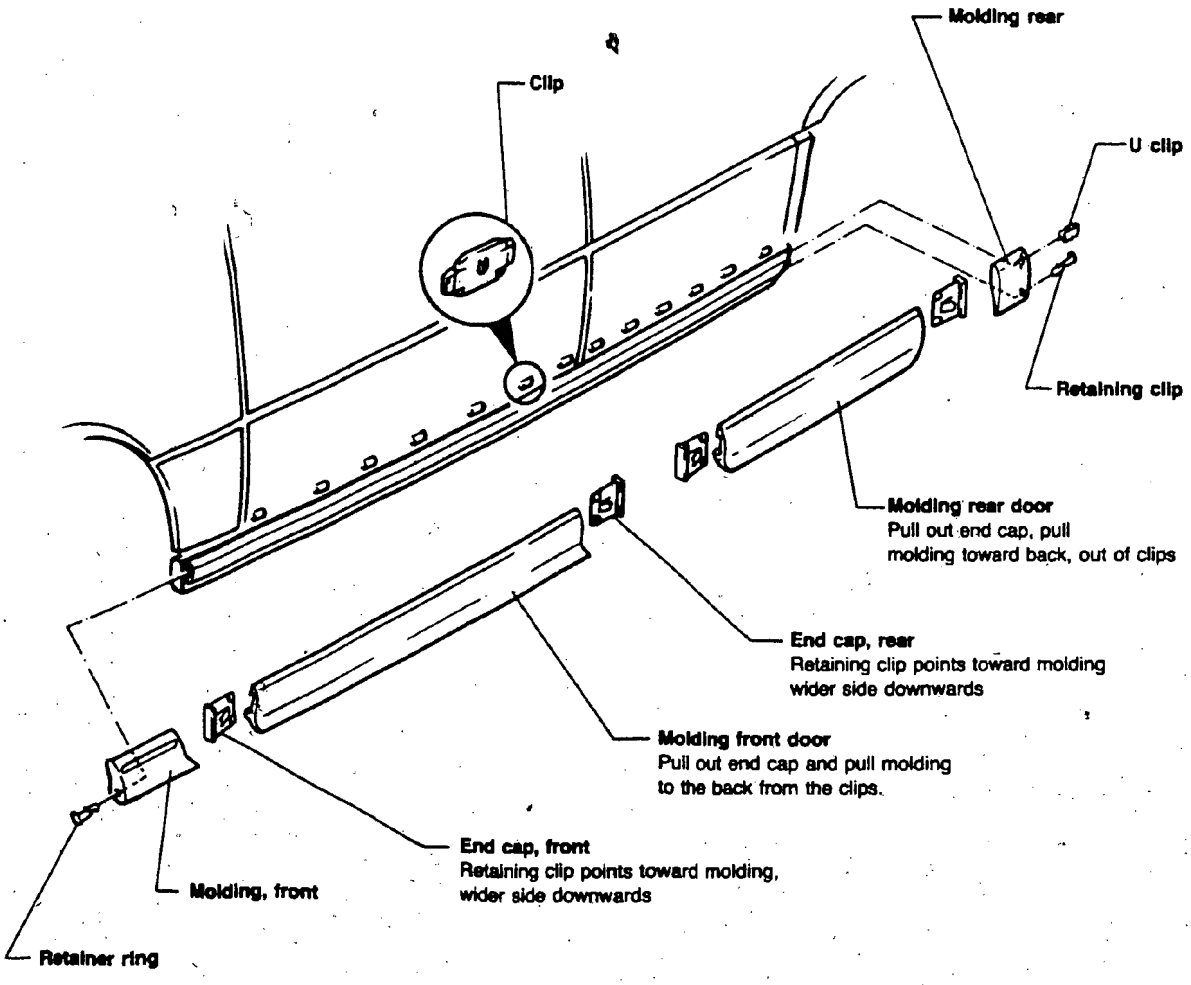

cardiagn.com

THIS FRAME INTENTIONALLY LEFT

BLANK

cardiagn.com

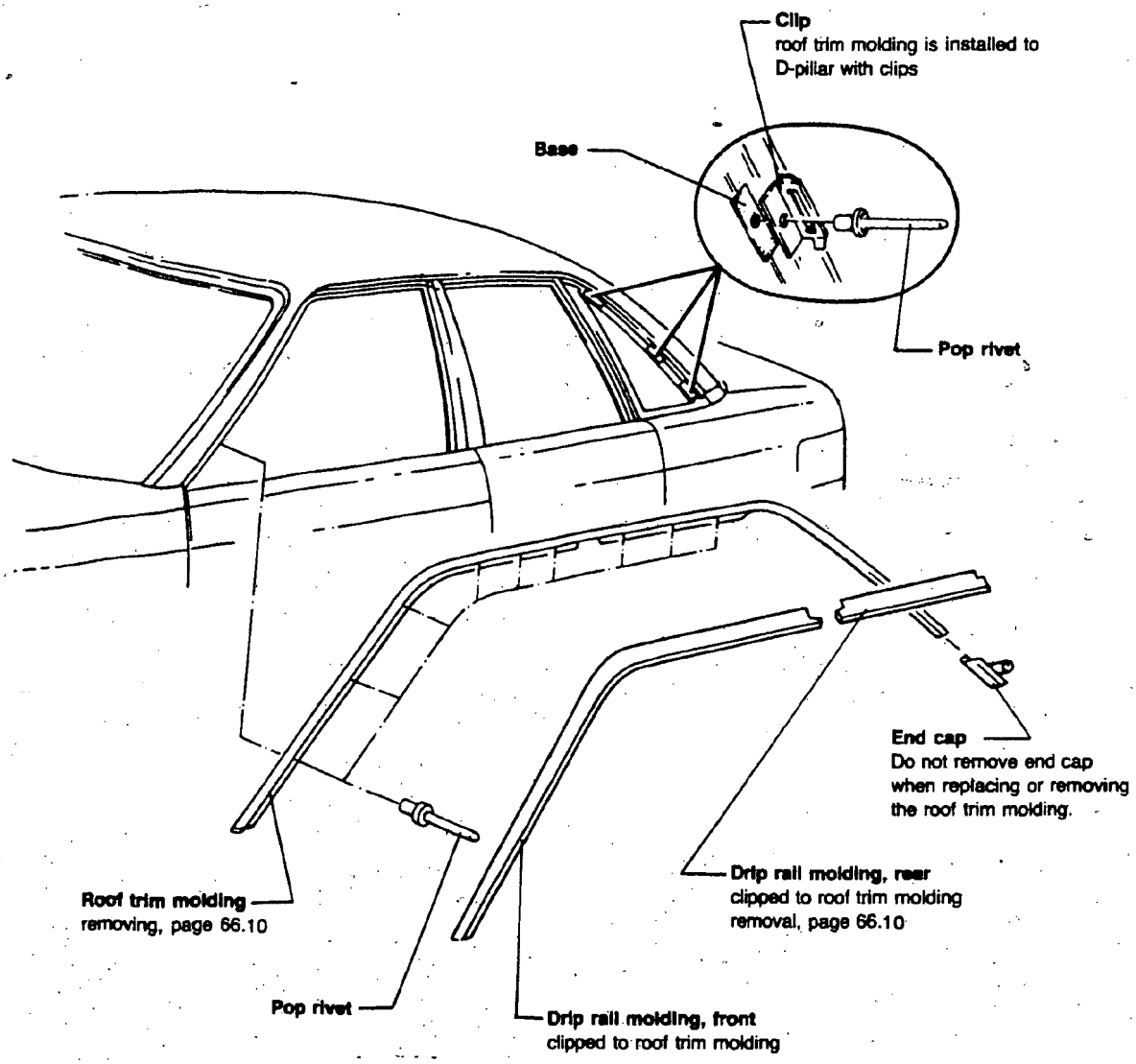

66-207

E-10

cardiagn.com

Roof trim molding, removing

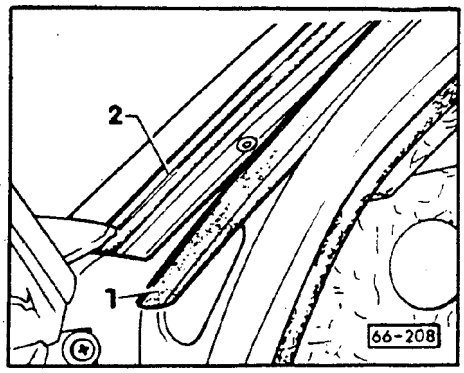

- remove trim for outer B-Pillar
- pry drip rail molding **1** front and rear out of roof trim molding **2** and pull out

Note

Do not remove end cap when replacing or removing the roof trim molding.

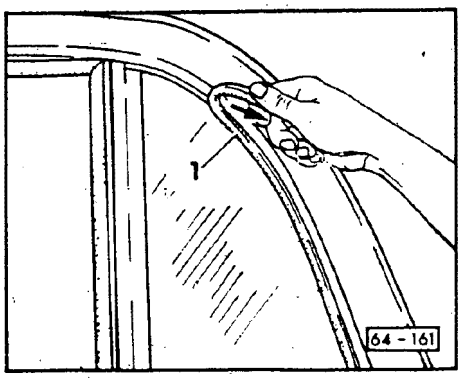

- begin to pull out gap covering **1** on C-pillar here
- bore out rivet heads with 8.0mm (5/16 in.) diameter drill and push remaining rivet through to the inside

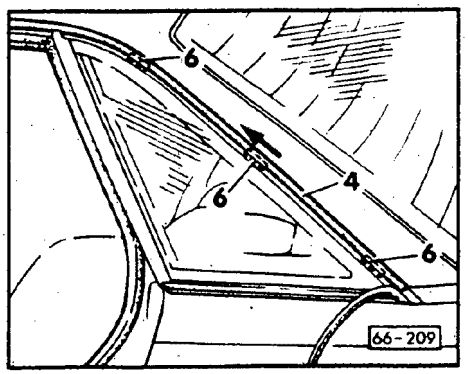

- pull roof trim molding **4** upwards along D-pillar approximately 30mm (1.1 in.), until the retaining straps of the roof trim molding are released from the clips **6**

Note

Paint damage may occur by the rivets turning when being drilled out.

The appearance and area of paint damage will determine the type of paint refinishing application: brush, spray can or spray gun.

cardiagn.com

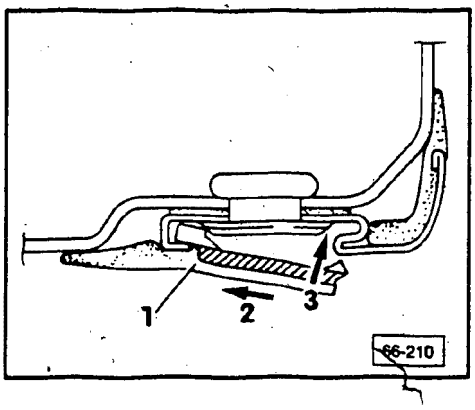

Roof trim molding, installing

Note

To avoid paint damage, guide the roof trim molding along D-pillar during installation with aid of a helper.

- install roof trim molding through end cap
- push roof trim molding along D-pillar under the retaining clips, until the perforation pattern on the roof frame matches the perforation pattern on the roof trim molding
- install pop rivet
- install drip rail molding **1** first in direction of arrow **2**, then press in roof trim strip in direction of arrow **3**

Side window exterior molding, removing

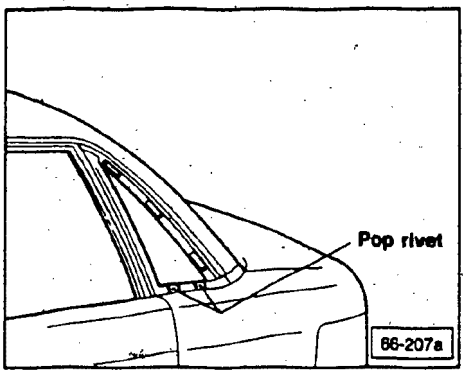

- remove side window (see Repair Group 64)
- bore out rivet heads and push remaining rivet through to the inside

Note

Paint damage may occur by the rivets turning when being drilled out.

The appearance and area of paint damage will determine the type of paint refinishing application: brush, spray can or spray gun.

- heat molding with hot air gun
- carefully pull off molding from top
- clean adhesive areas on sheet metal with 3M® General Purpose Adhesive Cleaner or equivalent

Side window molding, installing

- pull off paper from adhesive strip
- press molding to body sheet metal
- install pop rivet
- reinstall side window, trim and rear seat bench

cardiagn.com

CAUTION

Use care not to damage paint finish.

Prime damaged areas with anti-corrosion primer, and refinish as required.

Rear spoiler, removing/installing

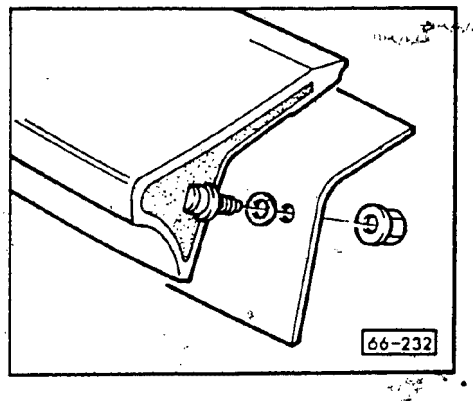

Removing

- tape area immediately above spoiler
- open lid and remove nuts on back of spoiler
- gently pull spoiler away from lid at both sides
- insert knife between spoiler and lid
- separate spoiler from lid with knife
- remove any remaining adhesive from spoiler and lid with 3M® General Purpose Adhesive Cleaner or equivalent

Installing

Install in reverse order, note the following:

- stick adhesive strip on spoiler
- remove paper backing from adhesive strip
- put spoiler on lid
- install and tighten spoiler nuts
  - side areas may be made to fit flush by warming spoiler corners with hot air blower, pressing tightly to lid

Rear spoiler, installing on replacement rear lid

CAUTION

Prime drilled holes with anti-corrosion primer and refinish as required.

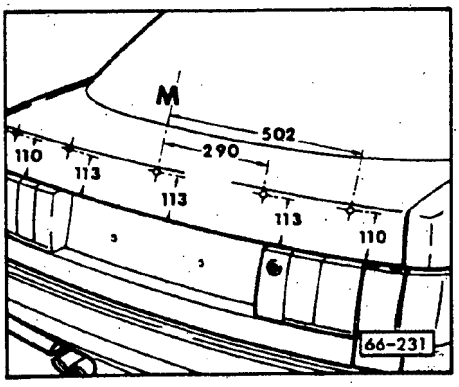

- mark spoiler mounting hole positions on replacement lid (as shown)
  - **M** = middle of lid
  - all dimensions in mm, ± 1.0 mm tolerance
- center punch and drill small starter holes in lid
- drill 8 mm (5/16 in.) holes
- put spoiler on lid
- check fit, rework holes as required
- install spoiler nuts and tighten

E-13

cardiagn.com

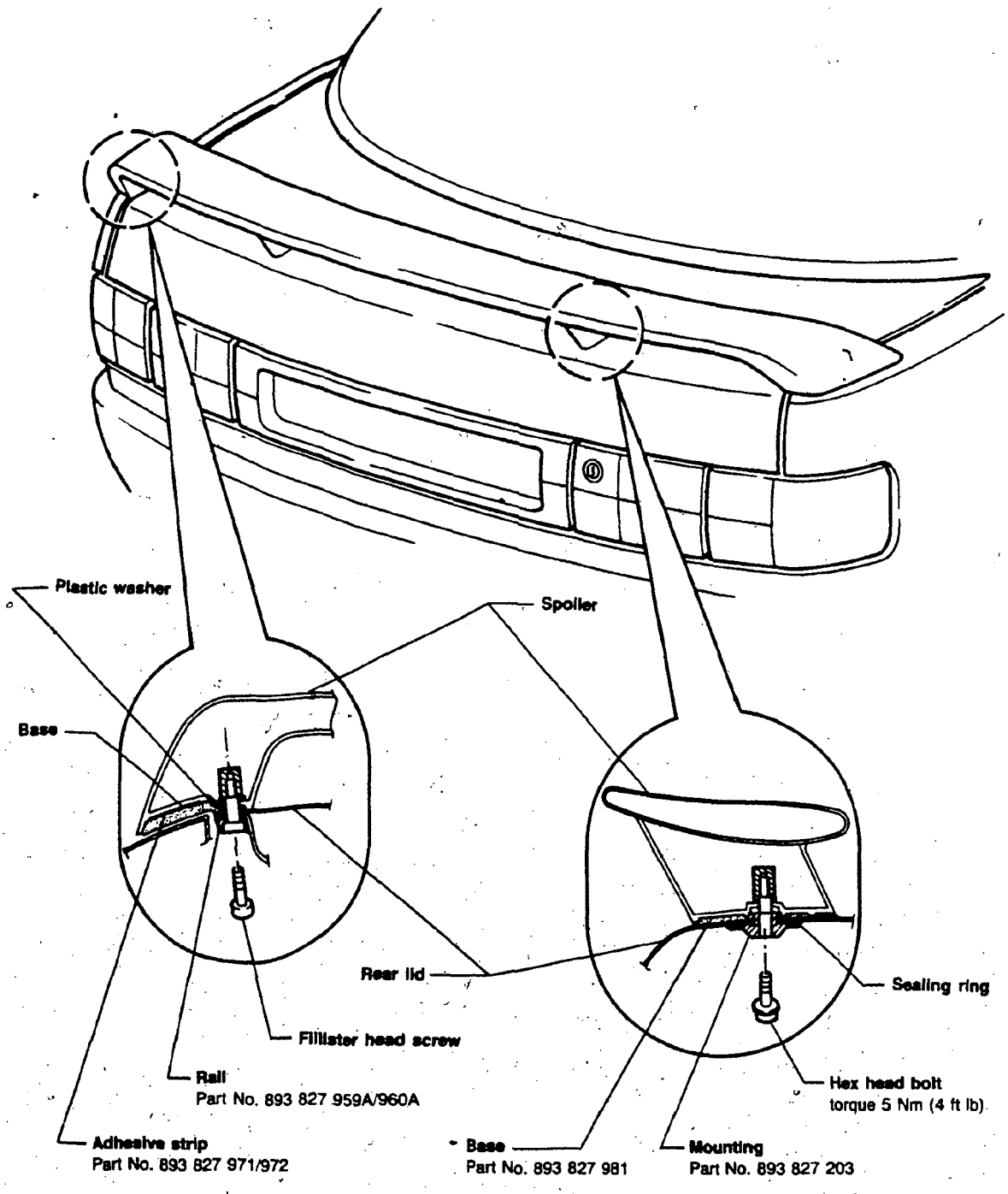

66-248

E-14

cardiagn.com

CAUTION

Prime all drilled holes and cut sheet metal with anti-corrosion primer and refinish as required.

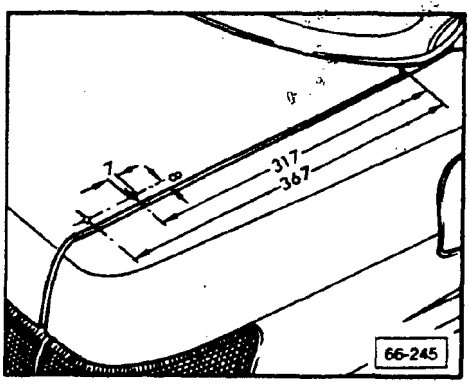

Rear spoiler, installing on replacement lid

- mark spoiler mounting hole positions on replacement lid (as shown)
  - all dimensions in mm
- center punch and drill small starter holes in lid
- drill 7.0 mm holes
- put spoiler on lid
- check fit, rework and refinish holes as required,
- cover with adhesive strip in center bracket area
- put spoiler on lid, fasten down with outer bolts
- using soft pencil, copy outline of center brackets onto adhesive strip
- remove spoiler, place base 5 on outline drawn on adhesive strip
  - outer edges of base should just cover outline
- mark bolt holes
- drill small starter holes
- drill 7.0 mm holes
- check fit, rework holes as required
- drill and enlarge holes to 15.0 ± 0.5 mm
- refinish holes as required

cardiagn.com

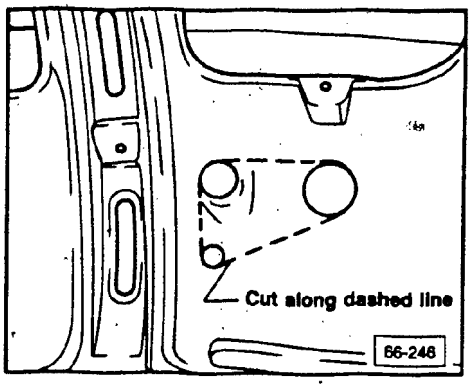

- using air saw, cut inner rear lid, as shown
- refinish edges as required

Rear spoiler, aftermarket installation

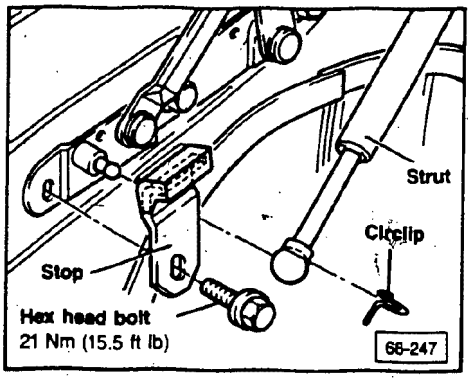

- installation procedures are identical, noting the following:
  - install stronger rear lid gas filled struts, Part No. **893 827 552A**

Rear lid gas filled strut, adjusting

- place stops in upper most position
- lightly tighten hex head bolts
- carefully push rear lid into lock
- open rear lid, tighten hex head bolts
  - 21 Nm (15.5 ft lb)

cardiagn.com

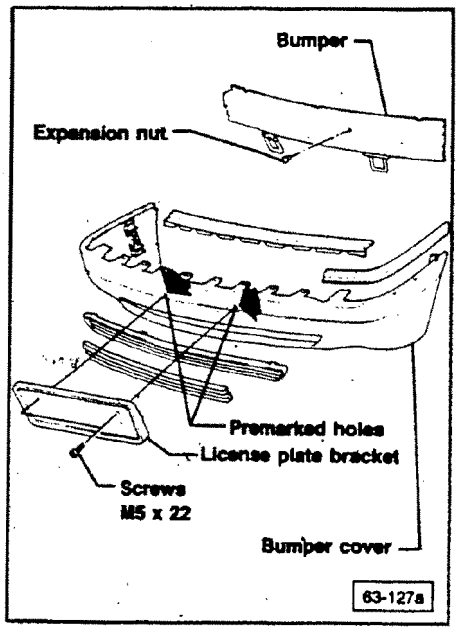

▶ Front license plate bracket, installing

- drill two 8mm (9/16 in.) diameter holes in bumper cover (**arrows**)
- drill points are pre-marked
- mount license plate bracket with M5 x 22 screws Part No. N 014 155.1 or equivalent

CAUTION

Part numbers are for reference only. Always check with your Parts Department for latest information.

cardiagn.com

CONTINUED IN THE

BEGINNING OF NEXT ROW

cardiagn.com

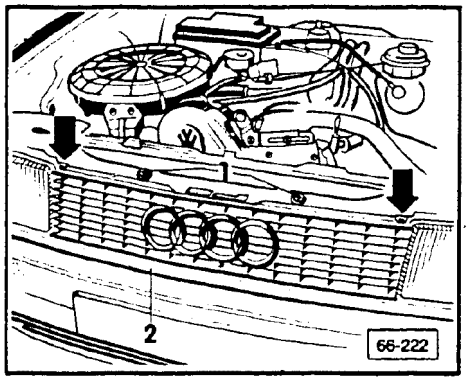

Radiator grille, removing

- remove Phillips screws **1**
- push down retaining clips (**arrows**) with screwdriver
- pull radiator grille up and away from front panel **2**

Radiator grille, installing

Install in reverse order of removal. Note the following:

- retaining tabs from radiator grille must fit behind front panel **2**

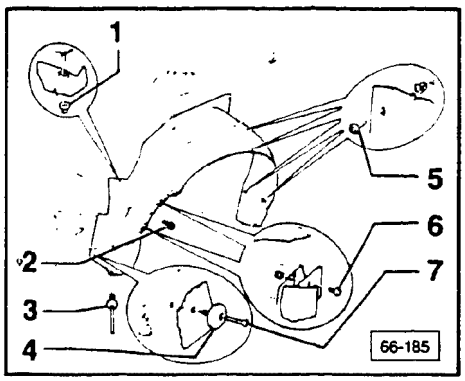

Wheel house liner, removing

- unclip and remove expanding clips, screws and nuts

1 — plastic nut
2 — self tapping screw
removing:
- remove screw/washer **6**
- pull fender away

3 — expanding clip
4 — clip
5 — self tapping screw
6 — screw/washer
- 6 Nm (53 in lb)

7 — self tapping screw

Wheel house liner, installing

Reinstall all components in reverse order of removal.

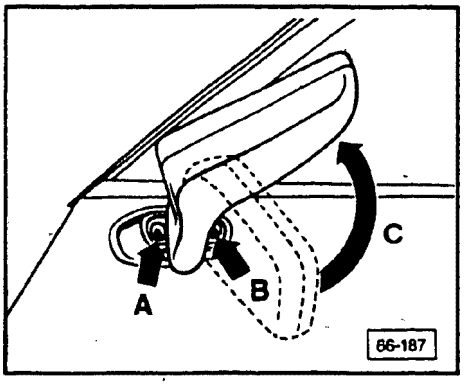

Outside mirror, removing

- turn mirror 90 (**arrow C**) to expose Phillips screws **A, B**
- holding mirror, remove both screws (**arrows A, B**)
- disconnect electrical plug at base of mirror

cardiagn.com

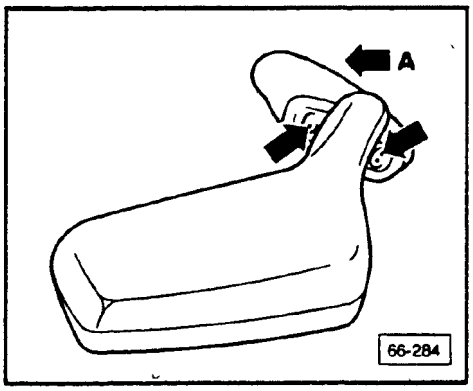

Outside mirror, installing

Reinstall mirror in reverse order of removal noting the following:

Left side

- mount mirror (**arrows**) as shown
  - arrow **A** points to front of vehicle

Note

Do not alter mounting position as this will change viewing angle.

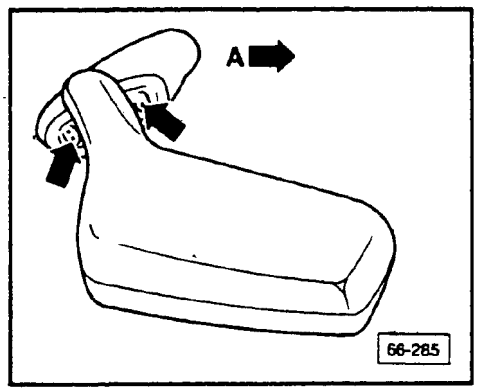

Right side

- mount mirror (**arrows**) as shown
  - arrow **A** points to front of vehicle

Note

Do not alter mounting position as this will change viewing angle.

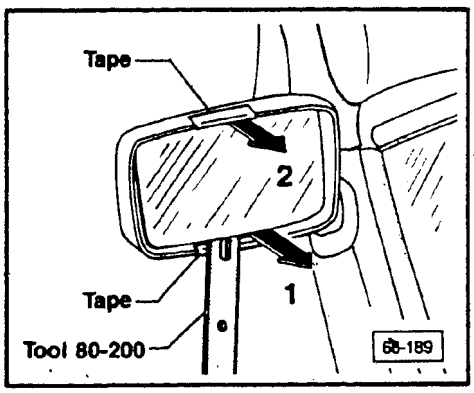

Outside mirror glass, removing

> **CAUTION**
>
> Wear protective gloves to prevent injury if glass breaks.
>
> Hold glass to prevent falling out.

- tape upper/lower edge of mirror housing to prevent damage
- using tool **80-200**, pry mirror glass off at bottom **1** and top **2**
- hold mirror, unplug electrical connector

cardiagn.com

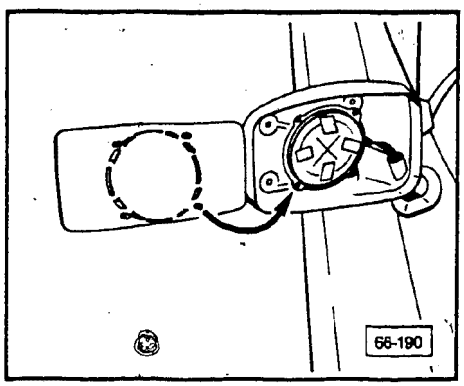

Outside mirror glass, installing

CAUTION

Apply pressure **only** at **center** of mirror glass.

- reconnect electric connector
- fit mirror onto guide pins (**arrow**)
- press into mirror housing
- check mirror for proper function

cardiagn.com

THIS FRAME INTENTIONALLY LEFT

BLANK

cardiagn.com

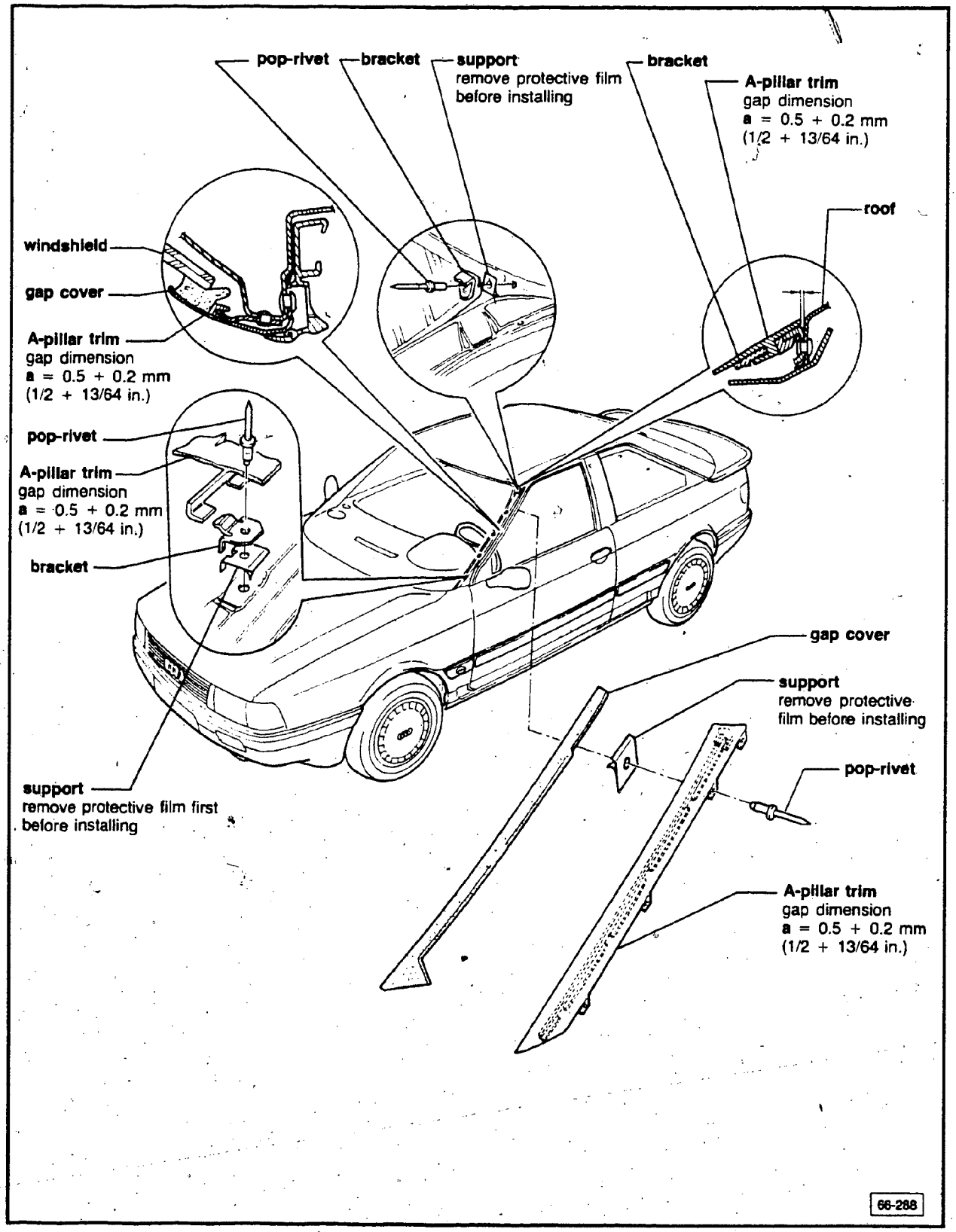

cardiagn.com

A-pillar trim, removing

- remove door seal at area of A-pillar
- bore out rivet heads with 8.0 mm (5/16 in.) diameter drill and push remaining rivet through to the inside

Note

Paint damage may occur by the rivet turning when being drilled out.

The appearance and area of paint damage will determine the type of paint refinishing application: brush, spray can or spray gun.

A-pillar trim, installing

Install in reverse order of removal, noting the following:

- remove protective film from supports prior to installing
- set A-pillar gap dimension, **a** = 0.5 + 0.2 mm (1/2 + 13/64 in.)

cardiagn.com

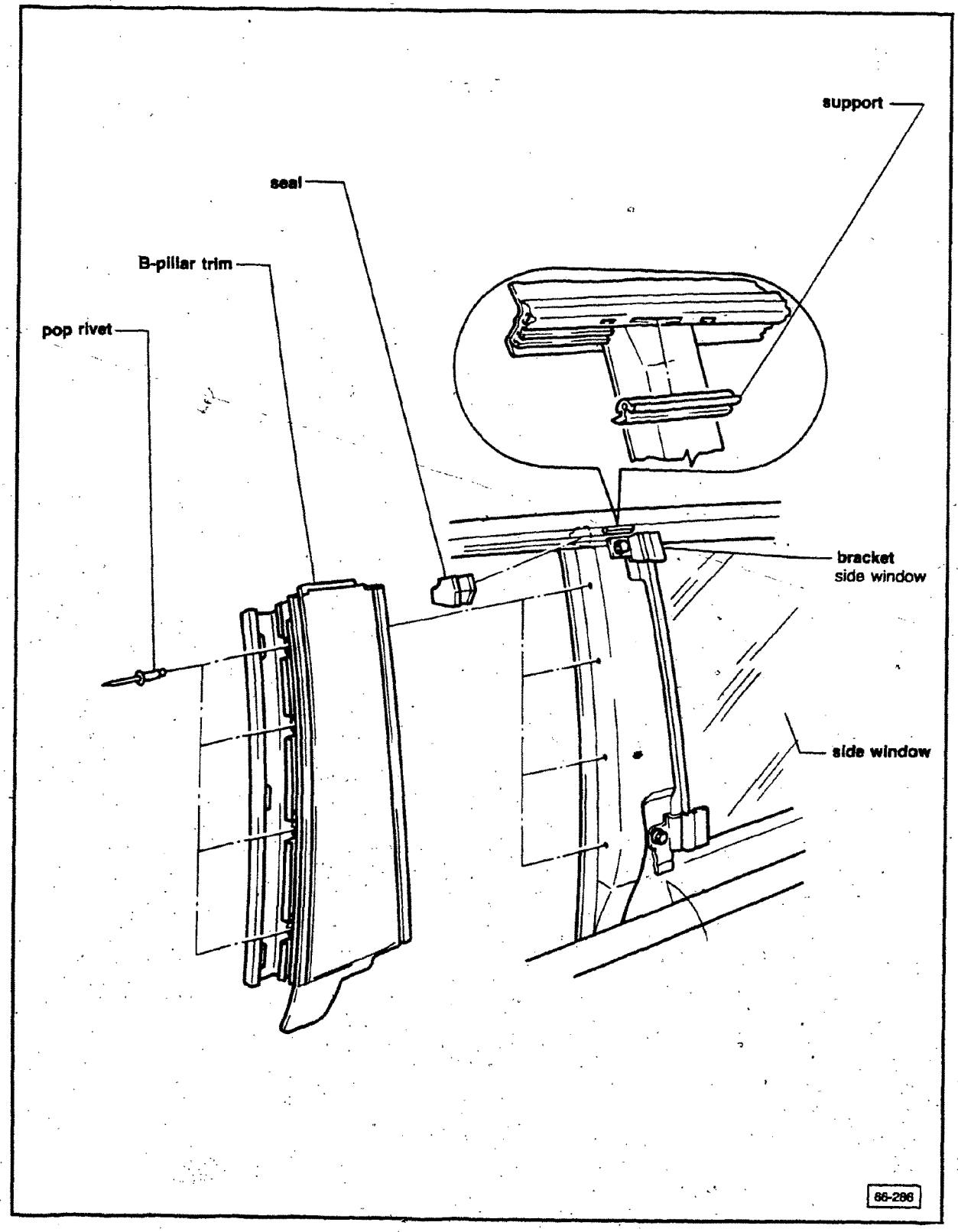

cardiagn.com

B-pillar trim, removing

- remove door seal at area of B-pillar
- bore out rivet heads with 8.0 mm (5/16 in.) diameter drill and push remaining rivet through to the inside

Note

Paint damage may occur by the rivet turning when being drilled out.

The appearance and area of paint damage will determine the type of paint refinishing application: brush, spray can or spray gun.

B-pillar trim, installing

Install all components in reverse order of removal

cardiagn.com

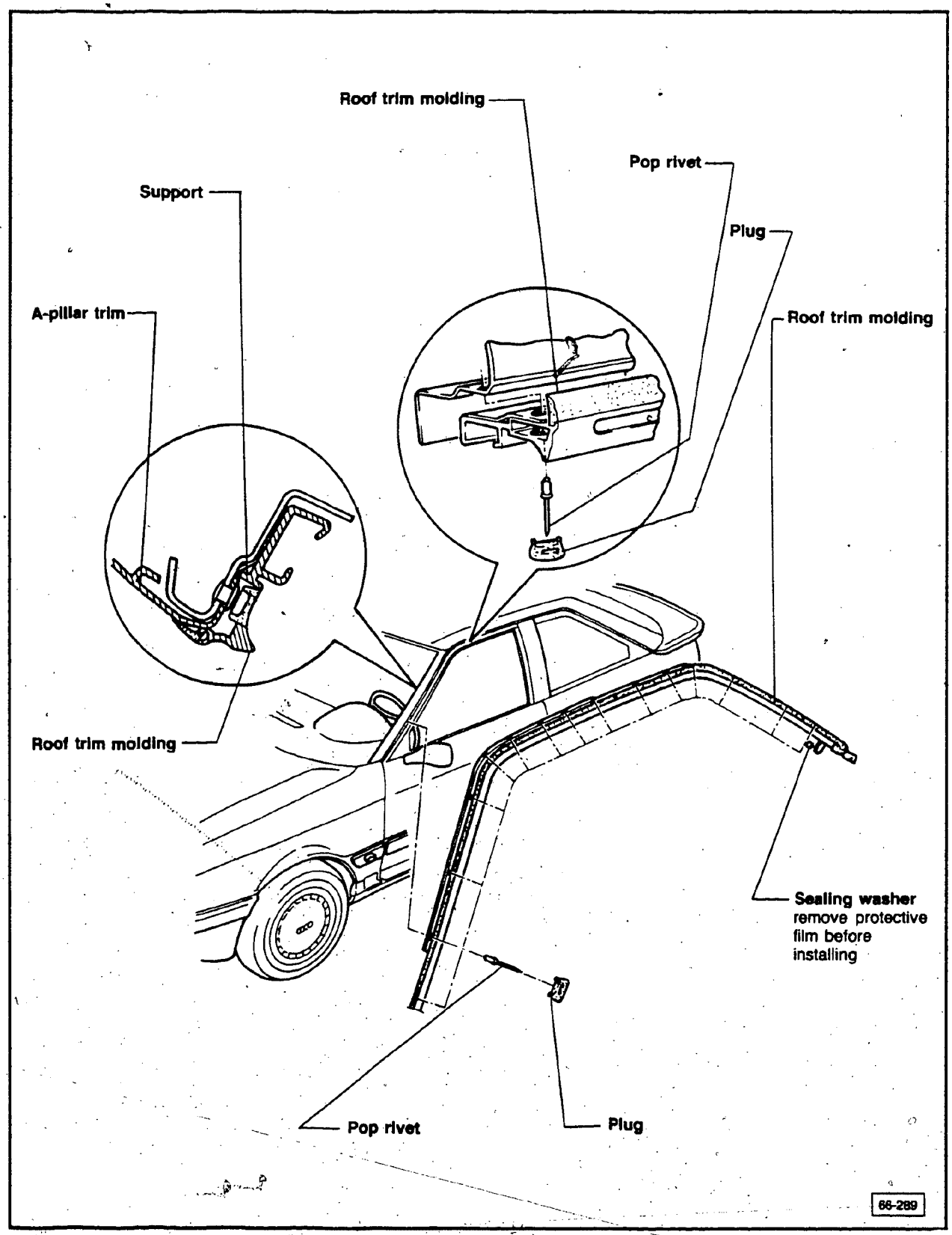

cardiagn.com

Roof trim molding, removing

- remove door seat at door glass area
- remove B-pillar trim
- remove side window
- remove side window seal along roof
- bore out rivet heads with 8.0 mm (5/16 in.) diameter drill and push remaining rivet through to the inside

Note

Paint damage may occur by the rivets turning when being drilled out.

The appearance and area of paint damage will determine the type of paint refinishing application: brush, spray can or spray gun.

Roof trim molding, installing

Install molding in reverse order of removal, noting the following:

Note

To avoid paint damage, guide the roof trim molding in place with aid of helper.

- remove protective film from support prior to installing

cardiagn.com

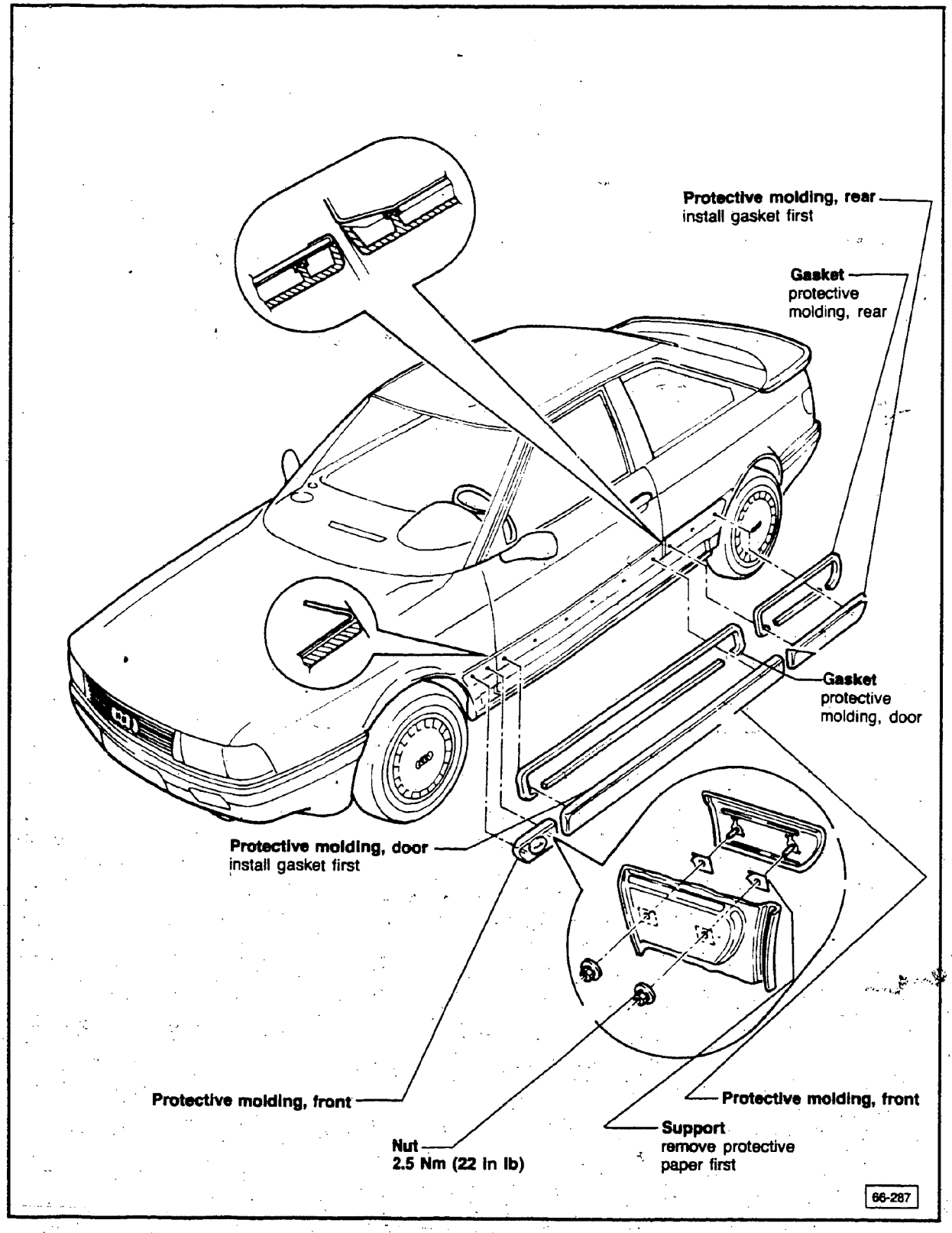

cardiagn.com

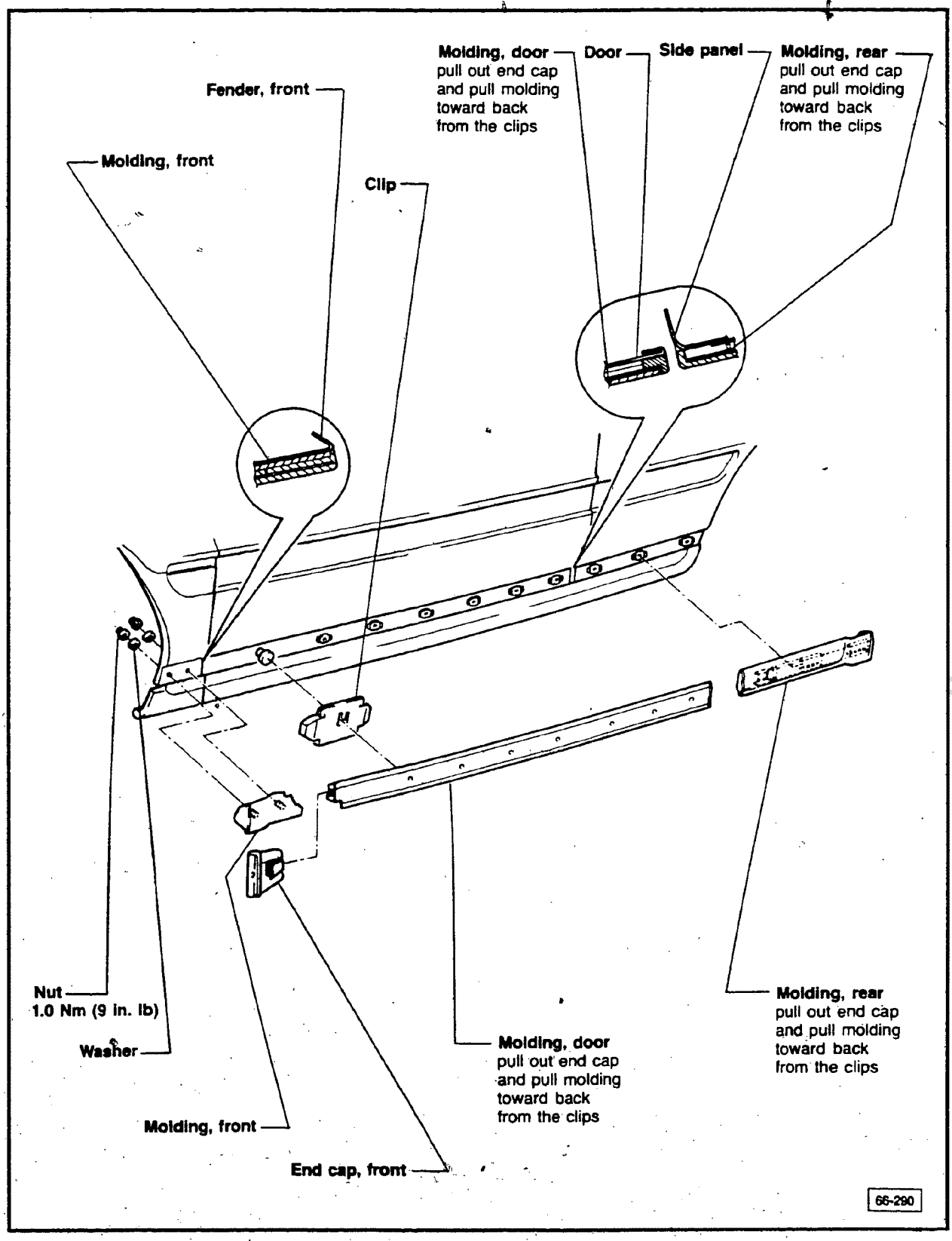

cardiagn.com

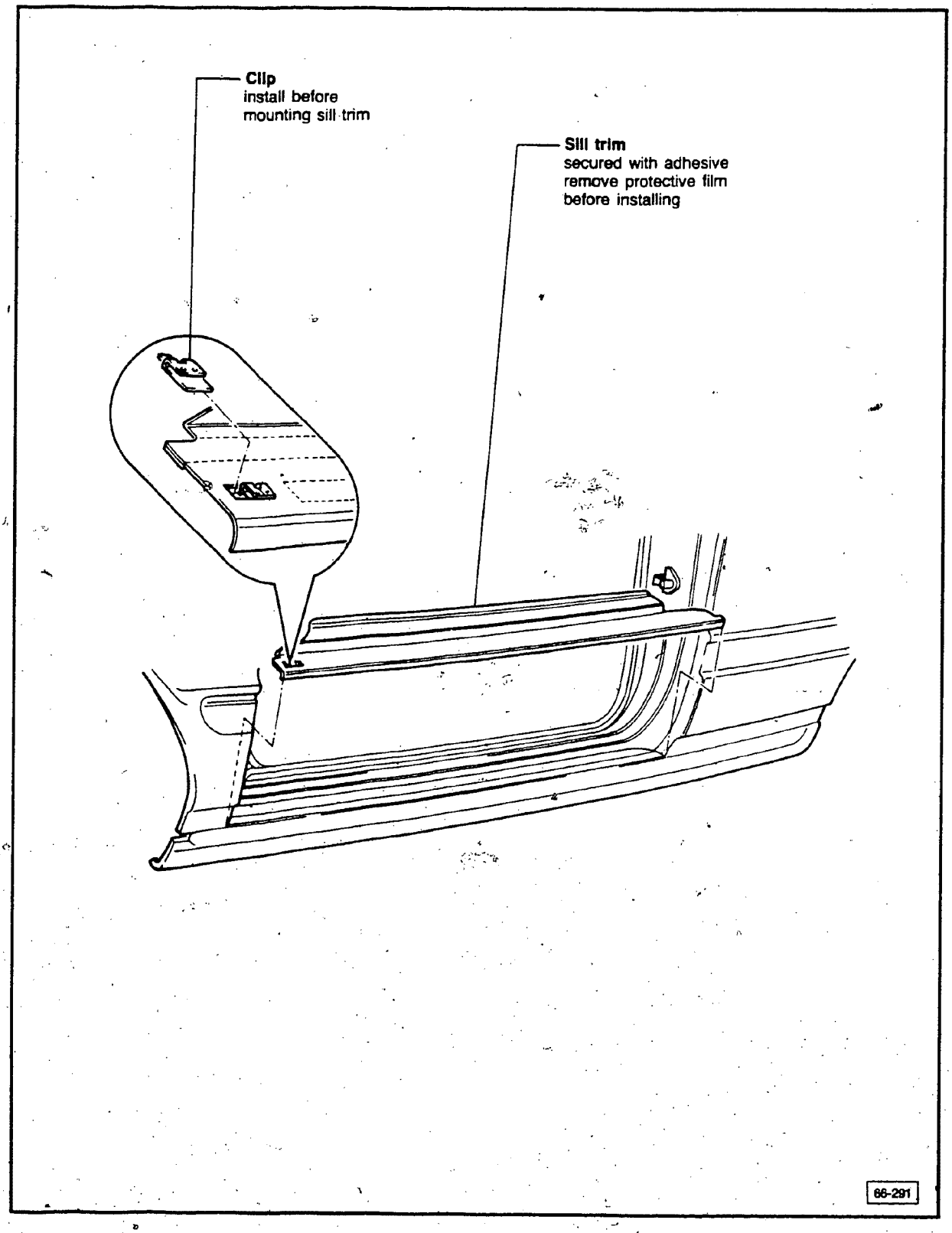

cardiagn.com

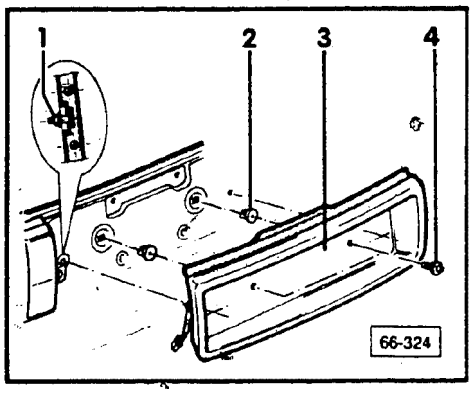

Front license plate trim, assembly

1 = nut
- 4 Nm (35 in lb)

2 = split rivet

3 = license plate trim
- remove protective film before installing

4 = screw/washer
- 4 Nm (35 in lb)
- secures license plate

cardiagn.com

Index

Accessory floor mats
- removing/installing 68.34

Airbag
- components, when to replace 68.50
- airbag system, testing 68.57
- airbag unit, removing/installing 68.38
- airbag unit/steering column switches, removing/installing 68.53
- collapsible steering column, assembly 68.39
- collapsible steering column, removing/installing 68.41
- components 68.46
- computer memory saver, installing 68.52
- connector, voltage supply, installed position 68.36
- date sticker, replacing 68.48
- energy reserve/voltage transformer, installed position 68.51
- disposal, active unit 68.49
- lock washers/springs for collapsible steering column 68.45
- safety measures, general 68.37
- safety measures, disposal of airbag/triggering units 68.37a
- spiral spring, checking 68.56
- spiral spring, removing/installing 68.55
- steering wheel, assembly 68.34
- triggering unit, installed position 68.51

Automatic seat belt tensioning
- assembly 68.2
- cable routing 68.3
- removing/installing 68.4

★ **NEW INFORMATION** since last filming

Illuminated vanity mirrors
- repairing 68.59

Seat belts
- assembly 68.9
- B-pillar mounting 68.10
- ★ child restraint anchorage, assembly 68.61
- ★ child restraint anchorage, installing 68.62
- inspection procedure 68.13
- rear mountings 68.11
- stop button, replacing 68.18
- webbing defects 68.16

Coupe

Automatic seat belt tensioning system
- assembly 68.24
- checking 68.25
- removing/installing 68.26

Interior rear view mirror
- removing/installing 68.33

Retaining brackets
- removing/installing 68.32

Seat belts
- B-pillar mounting 68.20
- bolt latch, seat frame 68.22
- ★ child restraint anchorage, assembly 68.63
- ★ child restraint anchorage, installing 68.64
- location 68.19
- rear belt, mounting 68.22
- rear shoulder belt, mounting 68.21

cardiagn.com

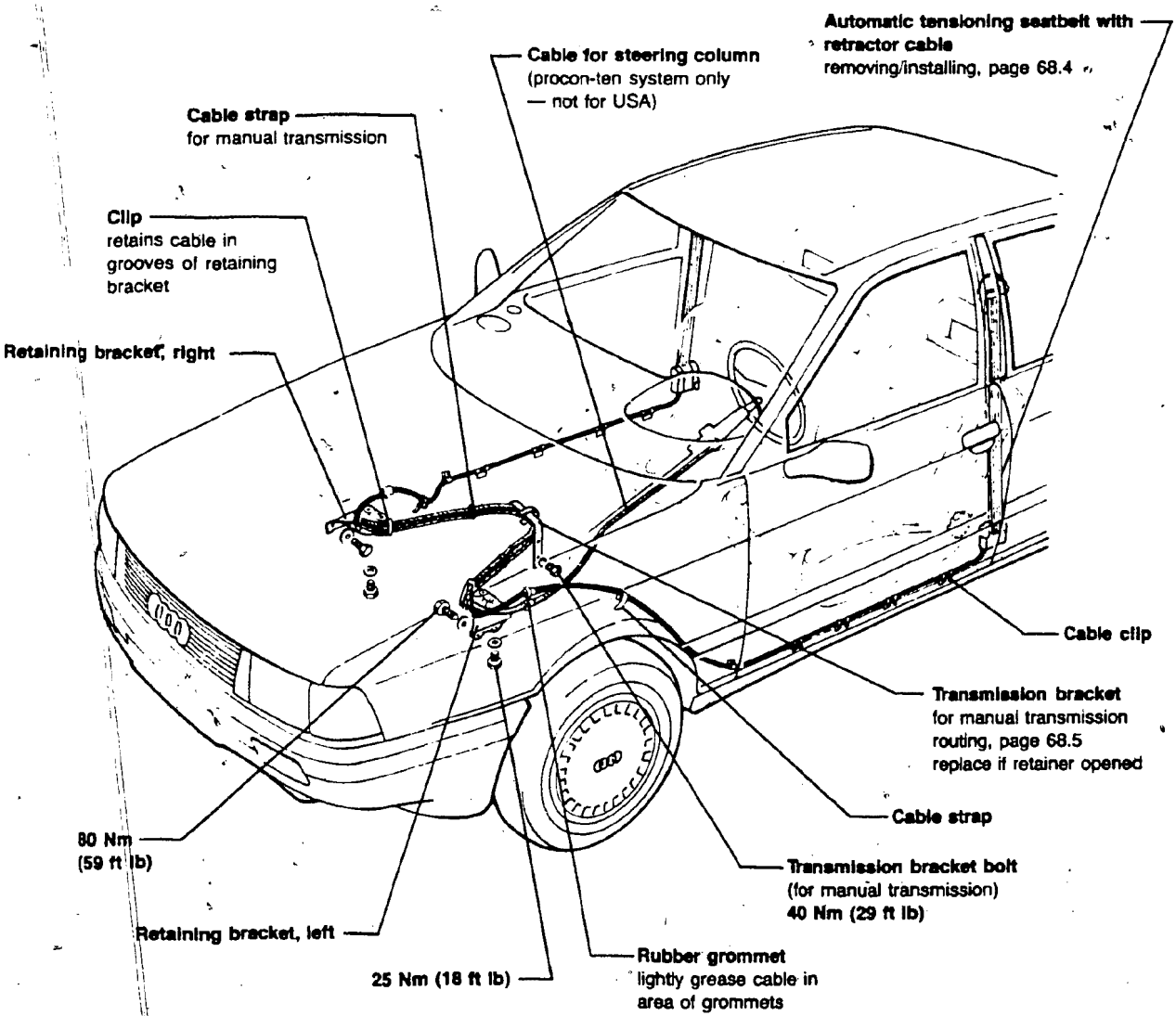

68-354

G-2

cardiagn.com

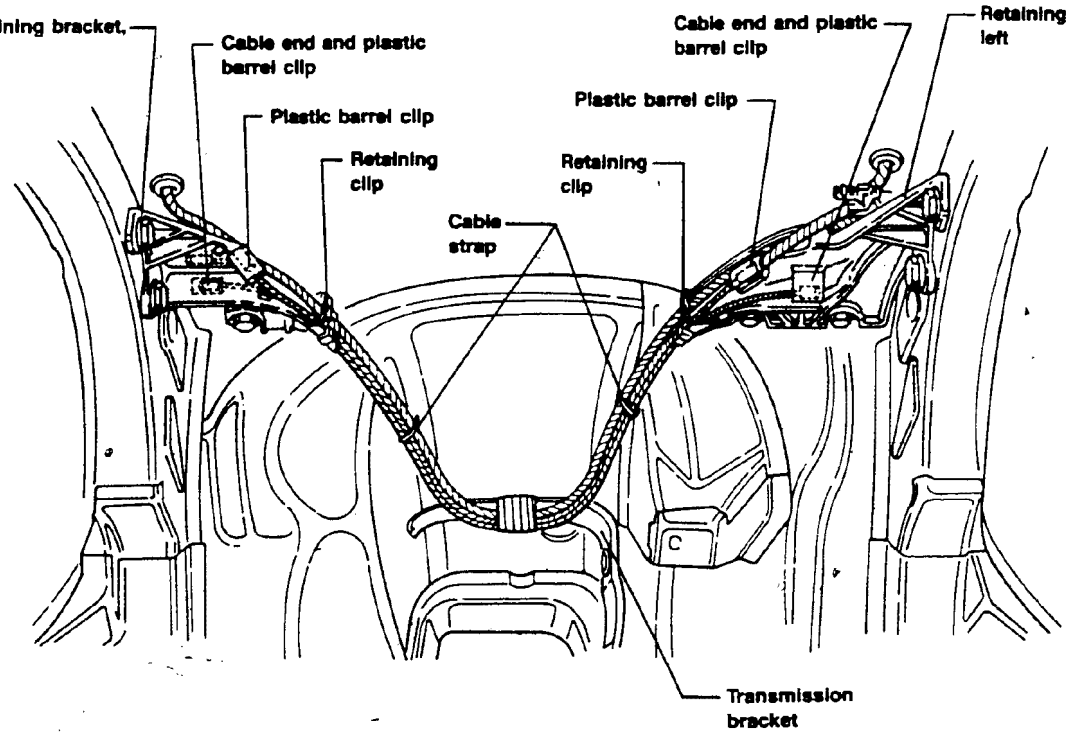

Manual transmission

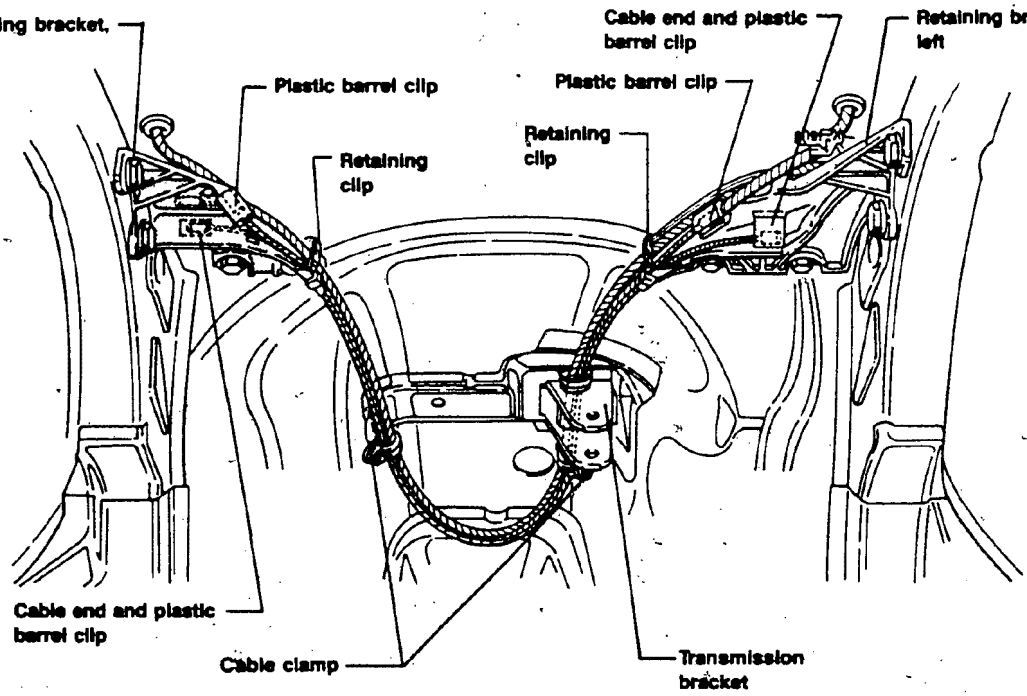

Automatic transmission

68-353

cardiagn.com

Automatic seat belt tensioning system, removing

- remove sill plate inner trim and B-pillar inner trim
- unbolt seat belt and retractor from B-pillar
- pull door inner seals off flange in area of lower A-pillar

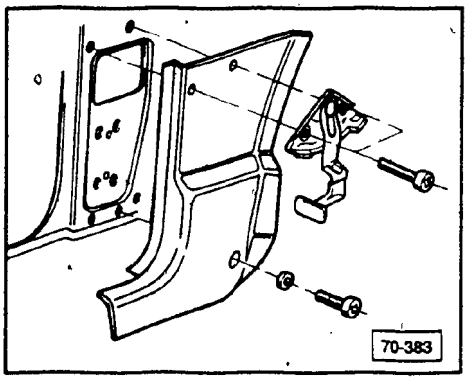

- remove lower left A-pillar trim panel and hood release lever

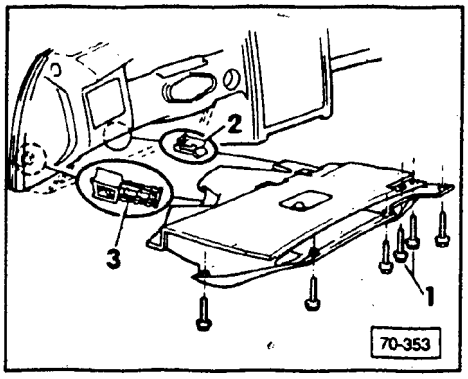

- remove shelf under instrument panel on drivers side

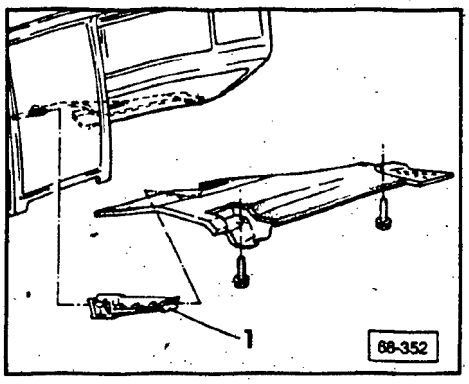

- remove screws and take out shelf under instrument panel on passenger side

cardiagn.com

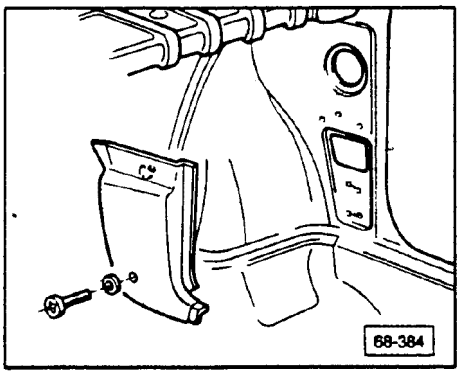

- remove lower right A-pillar trim panel

Note

The left side tensioning cable is routed on top of the sound deadener.

The right side tensioning cable is routed under the sound deadener.

- pull carpet up and in toward center on both sides
- cut into deadener material on right side
- pull cable out of retaining clips along sill
- open cable strap at front floor

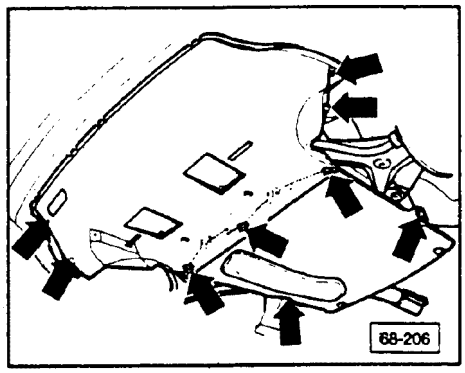

- remove shield under engine compartment

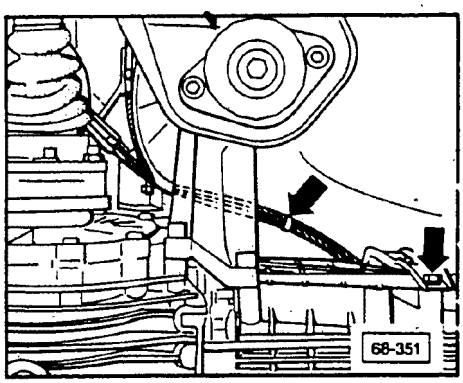

Vehicles with manual transmission

- remove bolt holding transmission bracket on transmission (**right arrow**)
- cut through cable straps on right and left side (**left arrow**)

Vehicles with automatic transmission

- open retaining clips on transmission bracket
- unscrew cable clamps from transmission tunnel

cardiagn.com

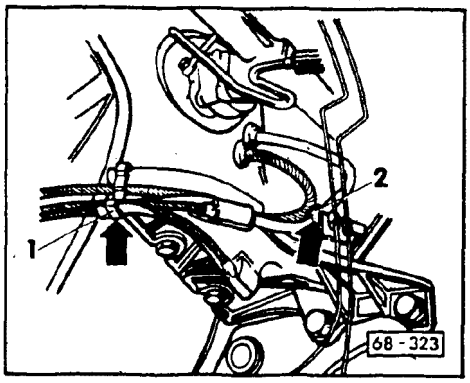

- remove cable from clip **1** on retaining brackets (left and right)
- push cable out of brake line clip **2** on retaining bracket (left and right)
- push cable end out of slot on retaining bracket (left and right)
- pull grommets out of body and pull cables through holes

Installing

> **CAUTION**
>
> Different transmission types require different cable lengths.

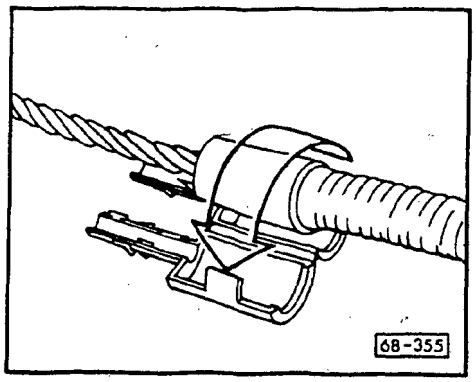

- replace plastic barrel clips for cable

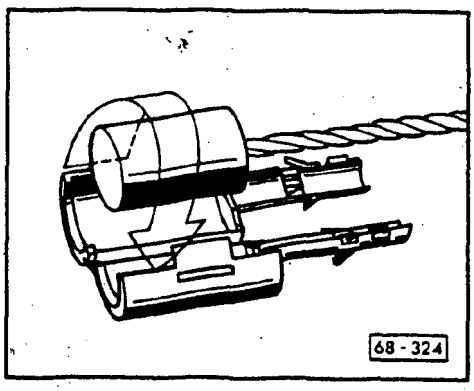

- replace plastic barrel clips for cable ends

Note

Do not use grease on plastic barrel clips, cable ends or retaining brackets.

cardiagn.com

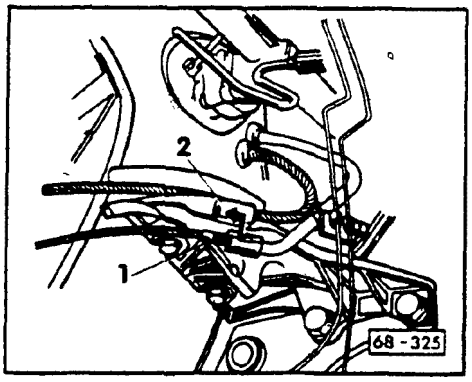

- mount seat belt and retractor to B-pillar
- install cable into retaining clips on inner sill
- grease cable lightly in area of rubber grommet
- install cable through hole in body panel and push grommet into hole
- pull cable plastic barrel clip **1** on cable into slot **2** of retaining bracket

Note

Cable plastic barrel clip is installed correctly when tabs are against retaining bracket slot. (**arrows**)

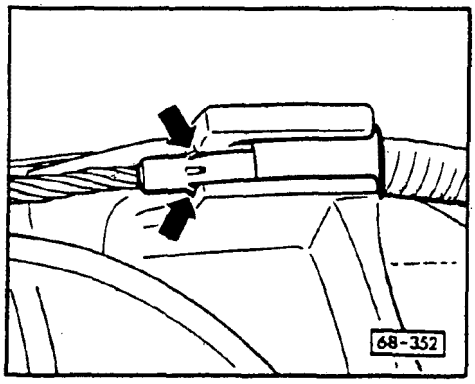

- guide cable around bracket to transmission

Vehicles with manual transmission

- insert cable through transmission bracket
- bolt bracket to transmission
  - torque to 40 Nm (29 ft lb)
- install new cable straps around cables

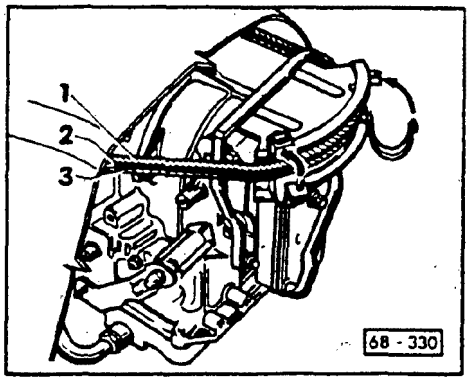

Vehicles with automatic transmission

- fasten cable with clamps to transmission tunnel
- close retaining clips on transmission bracket around cable

1 procon. cable for steering column (not used)
2 cable for left belt retractor
3 cable for right belt retractor

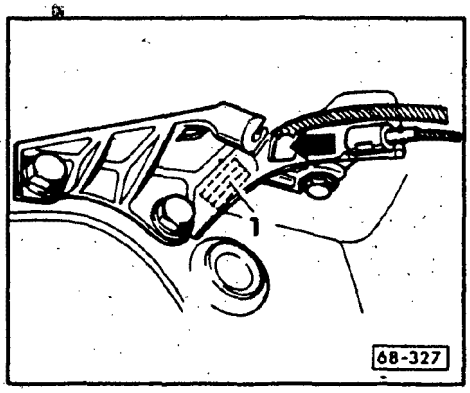

- install cable end through hole in retaining bracket (**arrow**) and into slot **1**

Note

Observe correct installation position of plastic barrel clip on cable end in slot. See illustration 68-352 for similar installed position.

cardiagn.com

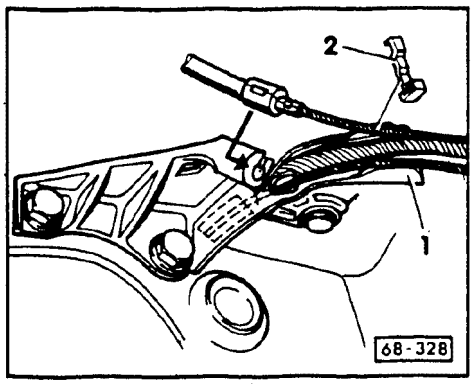

- install cable retaining clip 2

CAUTION

Cables must be routed at the retaining brackets so they rest in the appropriate grooves.

At the apex of the curve around the transmission bracket, the cables must have approx. 30mm ± 10mm (1 3/16 ± 3/8 in.) clearance to the bracket. If not:

- plastic barrel clips are not properly installed in retaining bracket slots
- belt with wrong part number installed

cardiagn.com

THIS FRAME INTENTIONALLY LEFT

BLANK

cardiagn.com

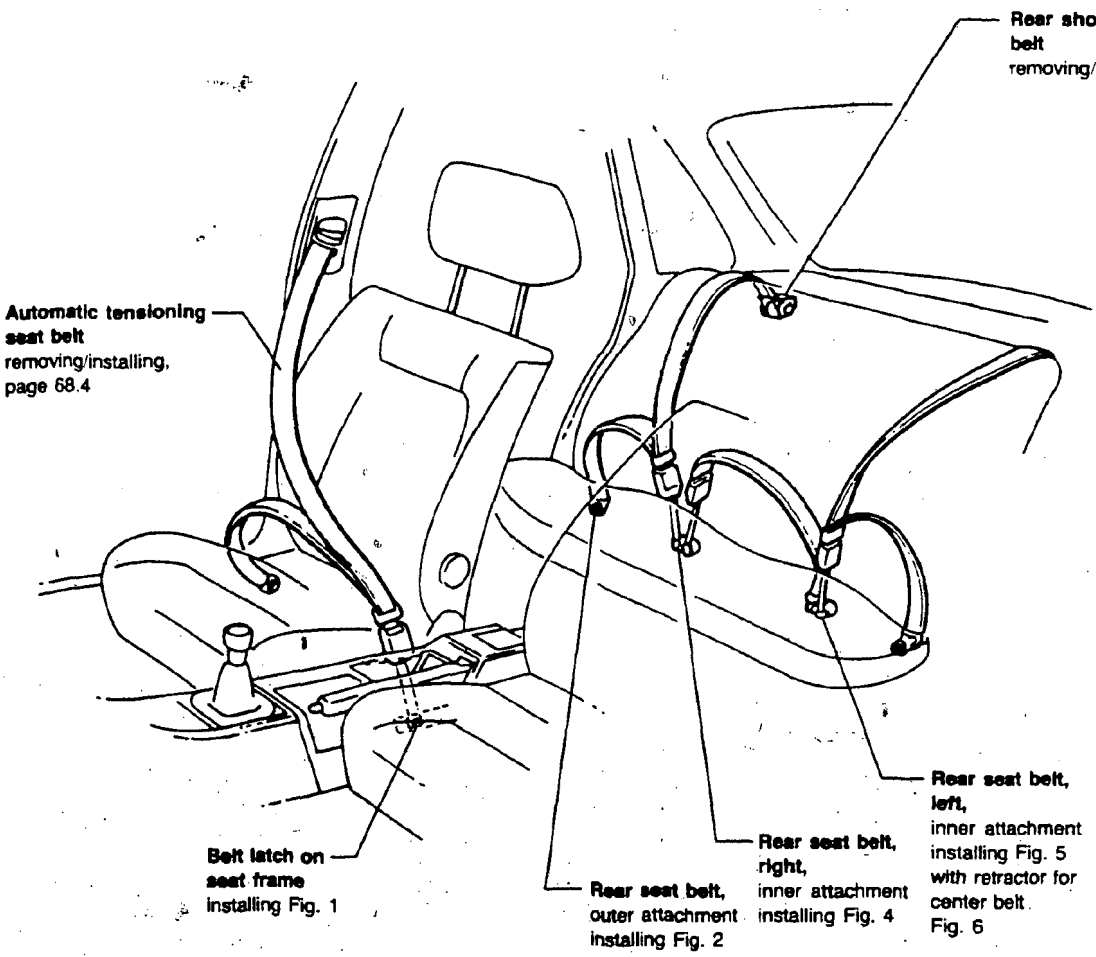

cardiagn.com

86-311

G-10

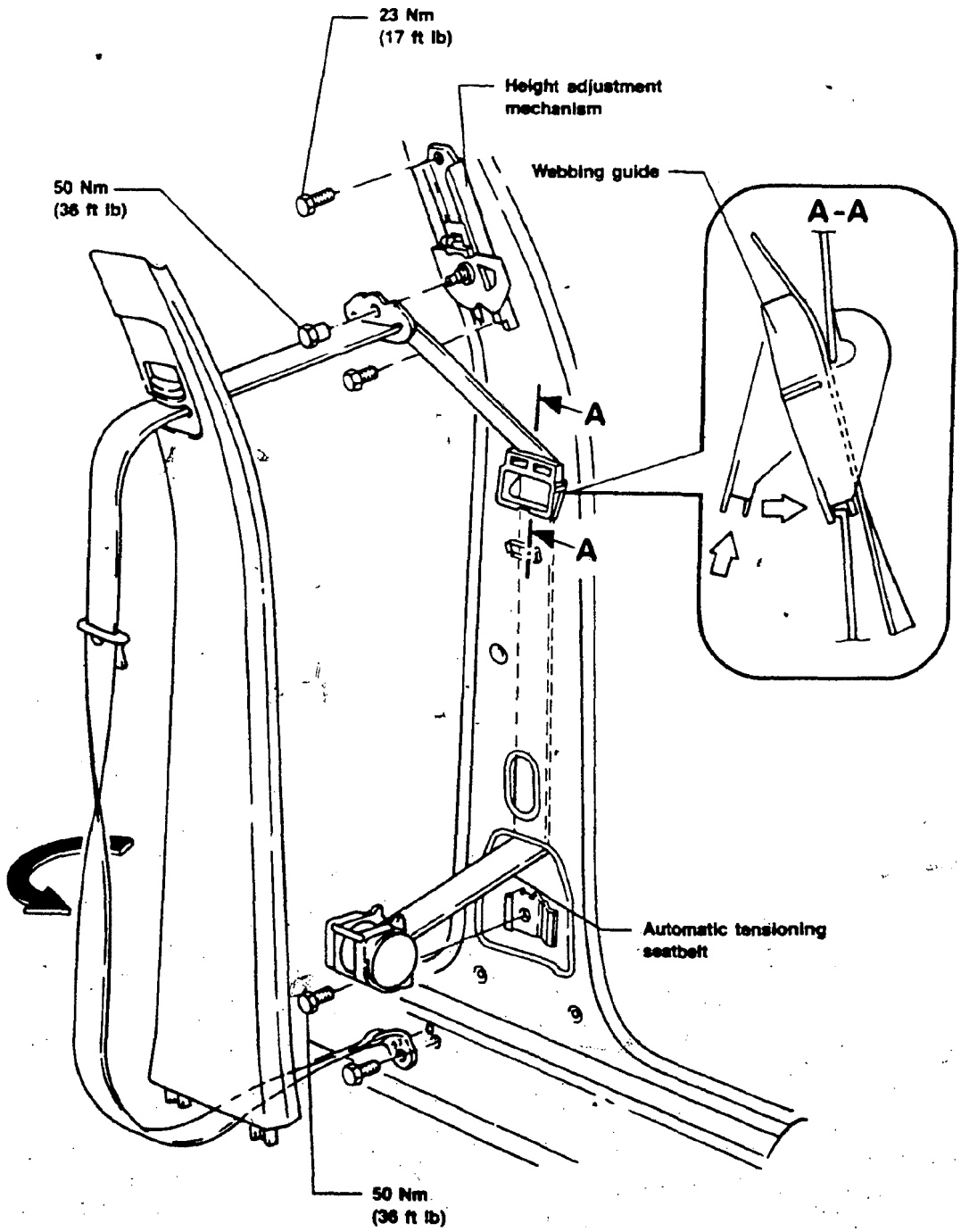

68-310

G-11

cardiagn.com

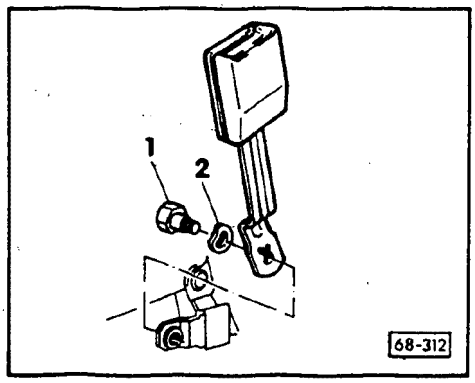

▶ **Fig. 1 Belt latch on seat frame, installing**

1 50 Nm (36 ft lb)
2 Spring washer

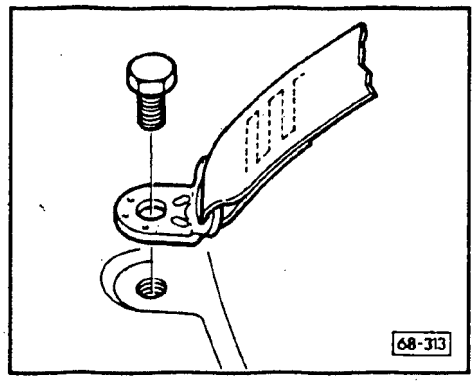

▶ **Fig. 2 Rear seat belt, outer attachment, installing**

- torque bolt to 50 Nm (36 ft lb)

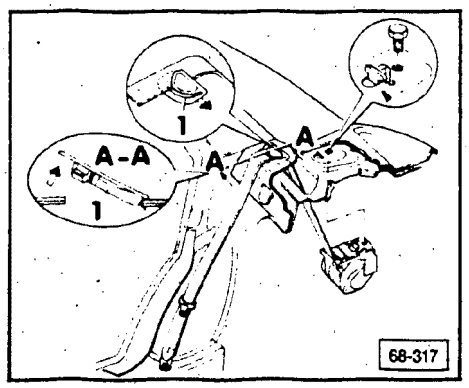

▶ **Fig. 3 Rear shoulder belt, removing/installing**

Removing

- remove seat bench and rear seat backrest (see Repair Group 72)
- remove hatshelf and D-pillar trim (see Repair Group 70)
- remove belt attachment at floor
- pry panel **1** out with a screwdriver and remove from belt webbing
- remove bolt and belt/retractor

Installing

- install in reverse order and torque bolts to 50 Nm (36 ft lb)

cardiagn.com

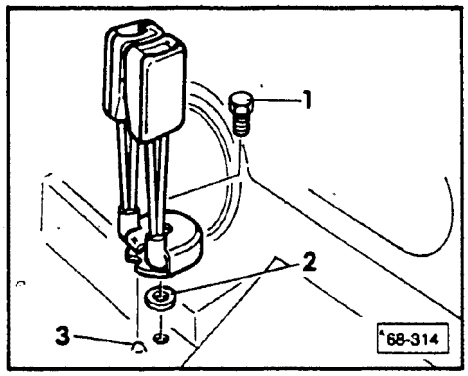

▶ **Fig. 4 Rear seat belt, left, inner attachment, installing**

1 50 Nm (36 ft lb)
2 Seal
3 Weld projection

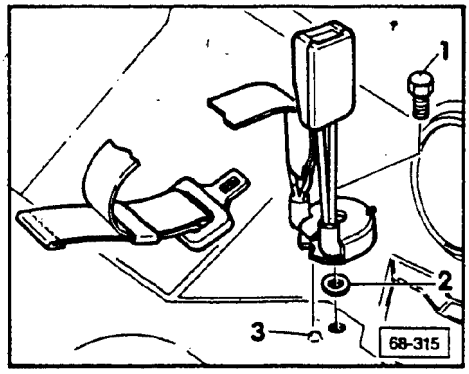

▶ **Fig. 5 Rear seat belt, left, inner attachment, installing**

1 50 Nm (36 ft lb)
2 Seal
3 Weld projection

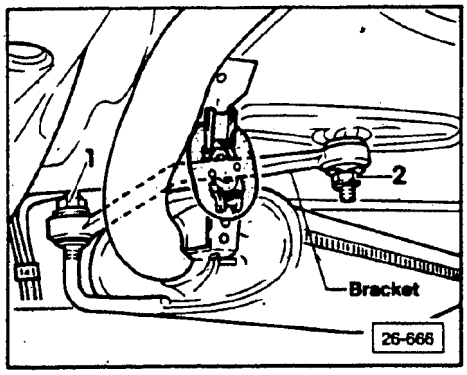

▶ **Fig. 6 Rear seat belt, left, inner attachment (with retractor), removing/installing**

Removing

- remove nut **2**
  - must be taken off before retractor is removed
- remove retractor mounting (inside vehicle)

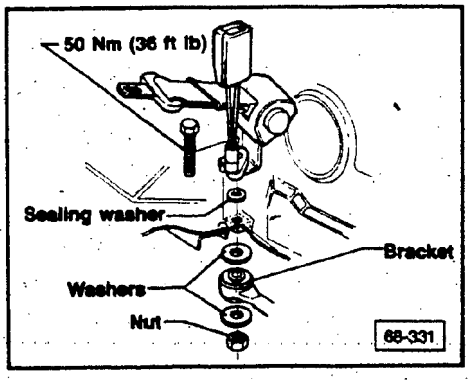

Installing

▶ **Fig. 7 Install in reverse order, noting the following:**

- ensure that the correct length bolt is installed to secure retractor to mounting bracket of middle muffler
  - Part Number **N 989 112 01**, 50 Nm (36 ft lb)

cardiagn.com

CAUTION

Seat belt assemblies must be replaced after being subjected to loading by occupants in collision.

CAUTION

Do not bleach or redye seat belt webbing. Webbing that is severely faded will not meet strength requirements and must be replaced.

Belt assemblies must be installed in sets. Do not interchange buckle and retractor assemblies with those designated for other seating positions or other car models.

Seat belt system, inspection procedure

A visual and functional inspection of seat belts is recommended to assure maximum protection for vehicle occupants.

The following inspection is described separately for front, rear and center seat belt positions. It includes all continuous loop, single retractor 3-point restraint systems, 2-point automatic (passive) front seat restraint systems, and all non-retractable belt systems.

System inspection, front seat

Webbing inspection

- check for twisted webbing due to improper alignment when connecting buckle
- fully extend webbing from retractor. Inspect webbing and replace with new assembly if following conditions are noted:
  - cut or damaged webbing
  - broken or pulled threads
  - cut loops at belt edge
  - color fading as a result of exposure to sun or chemical agents
  - bowed webbing

If webbing cannot be pulled out of retractor or will not retract to stowed position, check for the following conditions and clean or correct as necessary:

- dirty webbing coated with gum, syrup, grease or other foreign material
- twisted webbing
- retractor or loop on B-pillar out of position

cardiagn.com

Cleaning

Clean the belt webbing only with a mild soap solution recommended for cleaning upholstery or carpets. Follow the instructions provided on soap container.

Buckle inspection

- insert tongue of seat belt into buckle until audible click is heard. Pull back on webbing quickly to assure buckle is latched properly
- replace seat belt assembly if buckle will not latch
- depress button on buckle to release belt
  - belt should release with a pressure of approximately 2 lbs.
- replace seat belt assembly if buckle cover is cracked, push button is loose or pressure required to release buckle is too high

Retractor inspection

Front retractors are dual sensing and will lock up in two modes. The unit will lock up as the belt is being withdrawn from the retractor if the inertia increases dramatically. Also, the unit will lock up with a change in vehicle motion such as rapid braking.

- grasp seat belt webbing and, while pulling from retractor, give belt a fast jerk

Note

For automatic belt vehicles this mode is difficult to inspect due to a low setting of the inertia unit.

- drive vehicle in an open area away from other vehicles at a speed of approximately 5 to 15 mph and quickly apply footbrake
- if retractor does not lock up under these conditions, remove and replace seat belt assembly

Note

A passenger can be used to test the right hand retractor. The driver alone can test both retractors simultaneously by grasping the right hand webbing, extracting approximately 26 inches from the retractor and holding the belt while braking.

cardiagn.com

Seat belt warning light/buzzer

A light in the instrument panel displaying the words "fasten seat belts" or "fasten belts" along with an audible signal that lasts for four to eight seconds should be noticed when the ignition switch is moved to the "on" or "start" position and the driver's belt is unlatched. If the driver's belt is latched the buzzer should not activate.

For 2-point automatic belts, both belts must be connected to the door in order to start the vehicle. The "fasten belts" light should activate if either automatic belt is disconnected after starting.

Note

Correct any malfunctions in this system if the customer desires.

Anchorage Inspection

Seat belt mounting bolts are installed at 35.3 Nm to 47.0 Nm (20 to 35 ft lb). Retractors must be securely anchored in place. The bolts at the lower belt anchor point (not the retractor) and upper seat belt loop must be tight and still allow the hardware to swivel. Anchorage areas must be sound and uncorroded.

Note

Reinforce bolt mounting area if necessary.

System inspection, rear seat

Webbing/buckle Inspection

same as for front seat

Retractor Inspection

Rear seat retractors lock automatically when the webbing is extended and allowed to feed back into the retractor.

- check retractor by extending webbing and fastening to buckle. Allow several inches to feed back into retractor and then jerk belt sharply
- if retractor does not lock up, remove and replace seat belt assembly

cardiagn.com

Lap and shoulder belts (rear seat)

The 3-point system for the rear seat is the same as for front seat except for the light and buzzer warning system.

Anchorage inspection

same as for front seat

Center seat position (and non-retractable belts)

Some models have a rear center seat belt. These belts do not have a retractor. In addition to checking the webbing and anchorages, the adjustable slide locking of the belt must be checked.

- fasten tongue to buckle and adjust by pulling webbing end at right angle to connector and buckle
- release webbing and pull upward on connector and buckle
- If slide lock does not hold, remove and replace seat belt assembly

Center seat position (retractable belts)

same as for rear seat retractor inspection

Webbing defects, examples

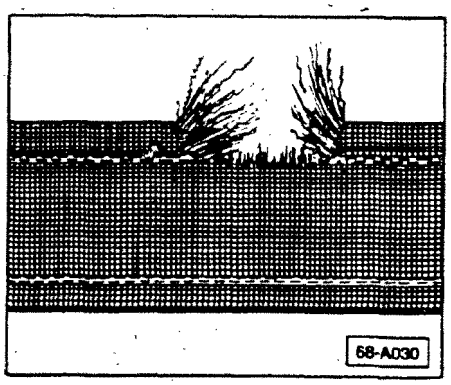

▶ **Fig. 1 Cut or damaged webbing**

cardiagn.com

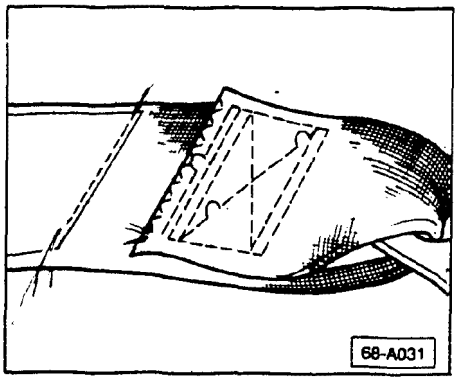

▶ **Fig. 2 Broken or pulled threads**

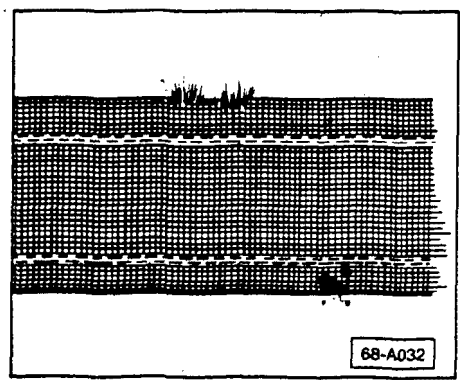

▶ **Fig. 3 Cut loops at belt edge**

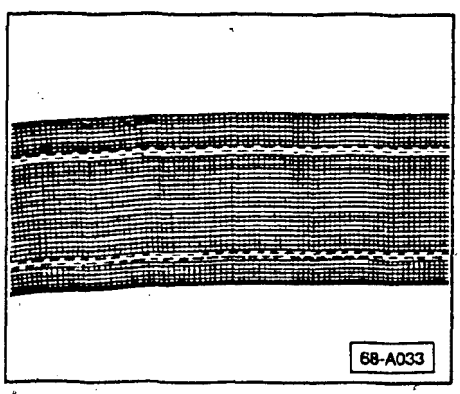

▶ **Fig. 4 Bowed webbing**

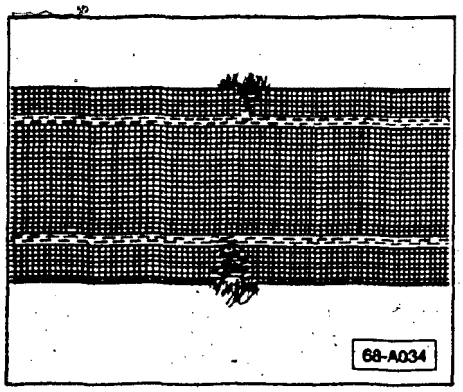

▶ **Fig. 5 Cut loops at belt edge**
■ from being caught in door

G-18

cardiagn.com

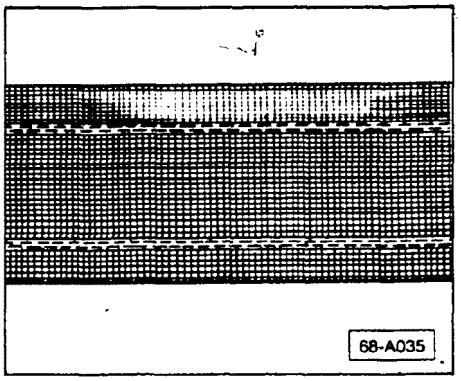

▶ Fig. 6 Color fading

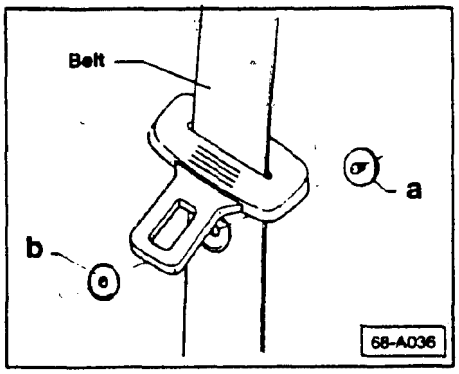

Seat belt stop button, replacing
(front belt illustrated)

Note

Check seat belt for damage and proper function before installing stop button.

- remove all traces (residue) of old button

▶

- warm replacement button **A** and eyelet **B** with hot air gun to 25° – 40°C (77° – 104°F)
- press button through webbing
  - hole may be prepunched with pencil or similar tool
- clip on eyelet with flat nose pliers or similar tool

cardiagn.com

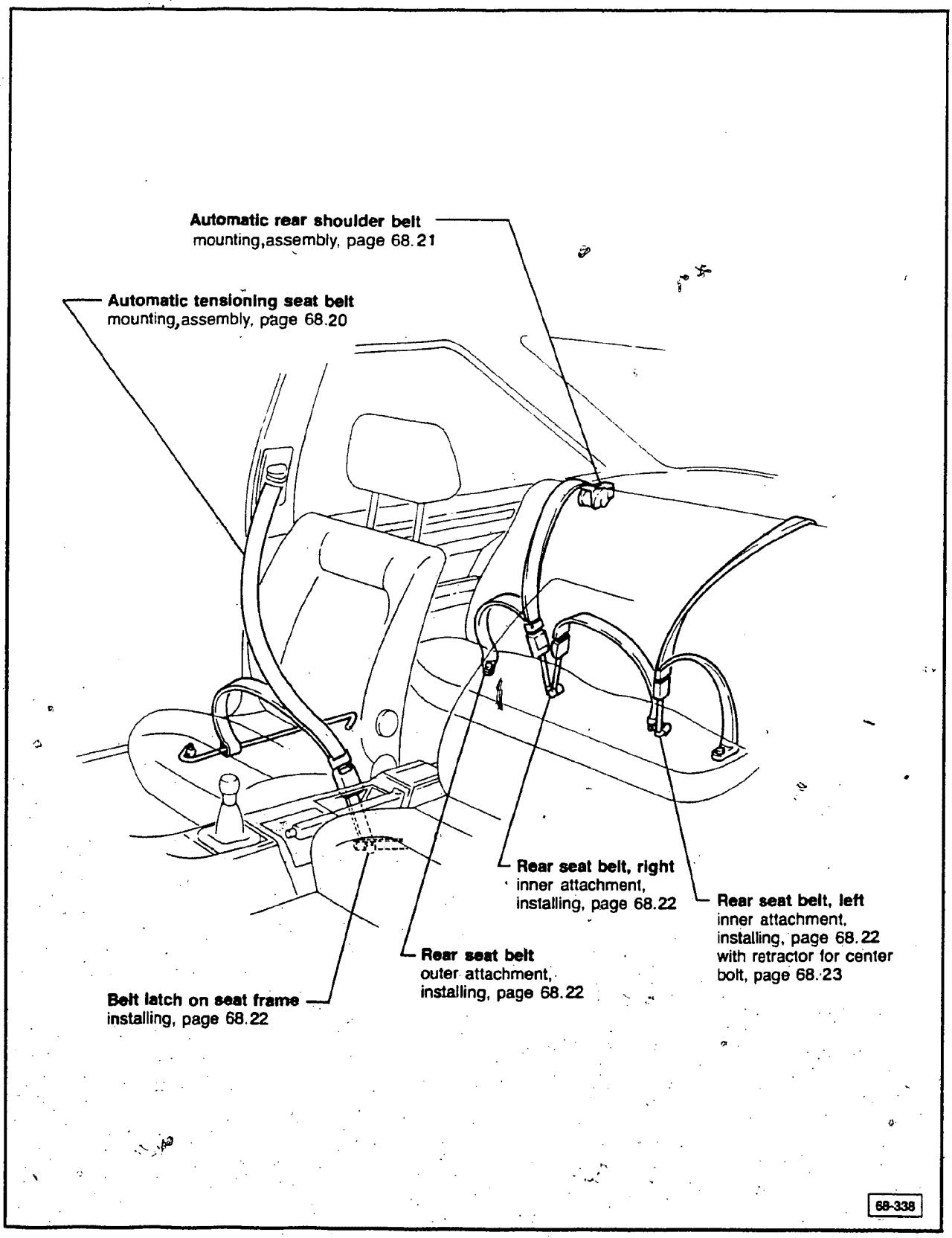

cardiagn.com

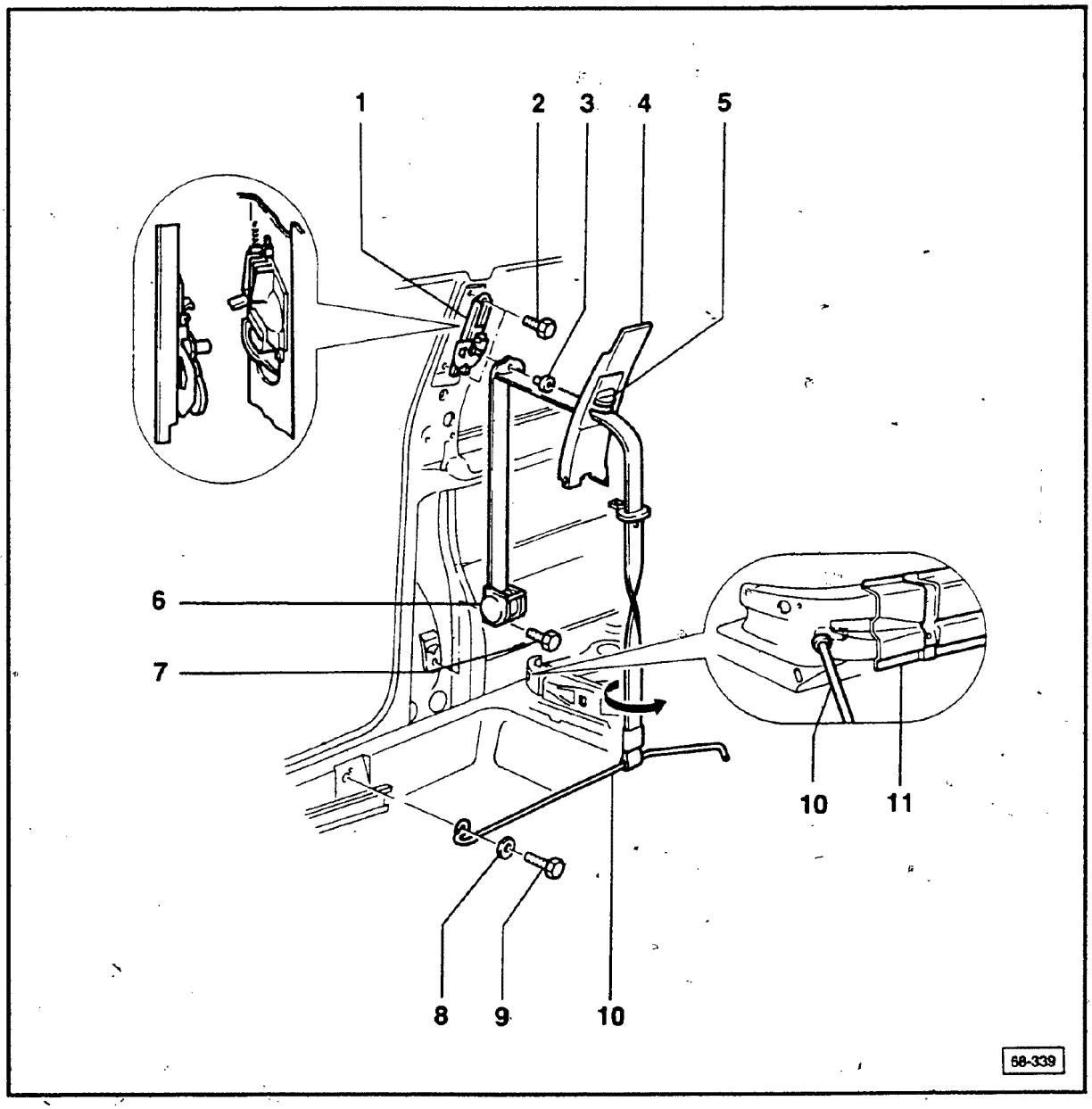

1 — **Height adjustment mechanism**
must lock audibly in **topmost** position
button must always return
to **topmost** position after use

2 — **23 Nm (17 ft lb)**

3 — **23 Nm (17 ft lb)**

4 — **B-pillar trim**

5 — **Height adjustment button**

6 — **Automatic tensioning seatbelt**
ensure nothing
jams in mechanism

7 — **50 Nm (37 ft lb)**

8 — **Washer**

9 — **50 Nm (37 ft lb)**

10 — **Seat belt guide rail**

11 — **Floor assembly**

cardiagn.com

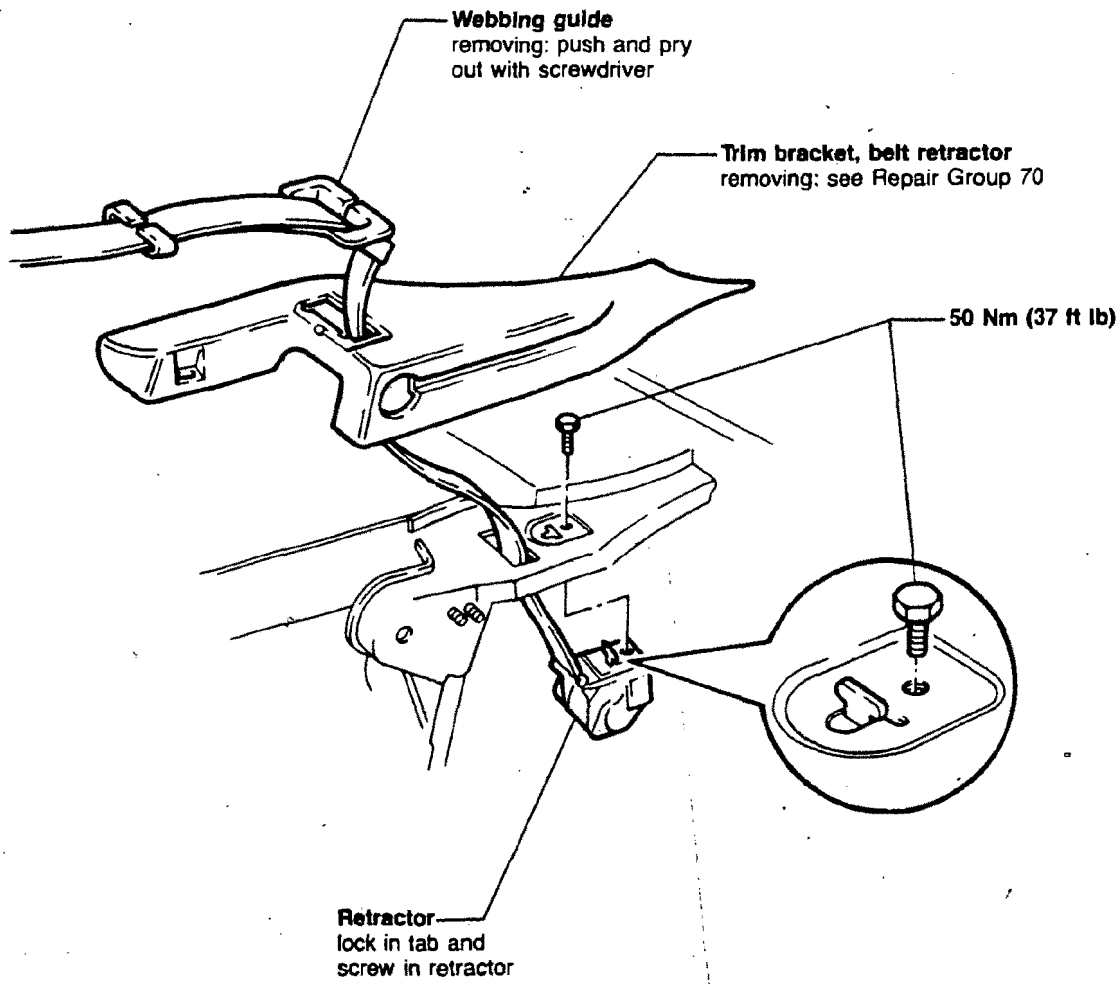

cardiagn.com

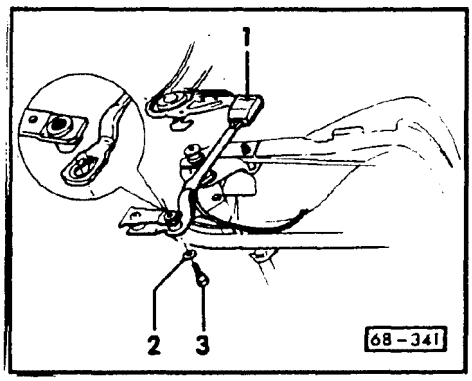

▶ **Fig. 1 Belt latch on seat frame, installing**

1 — belt lock
2 — spring washer
3 — 60 Nm (44 ft lb)

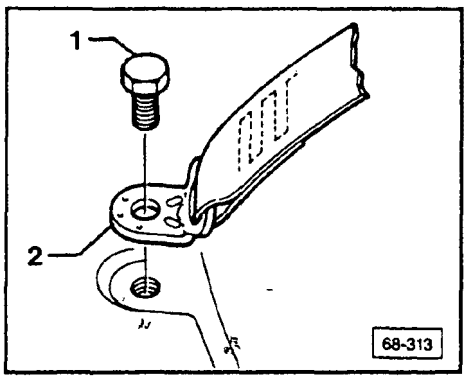

▶ **Fig. 2 Rear seat belt, outer attachment, installing**

1 — 50 Nm (37 ft lb)
2 — mounting bracket
- must fit into cutout in floor assembly (**arrow**)

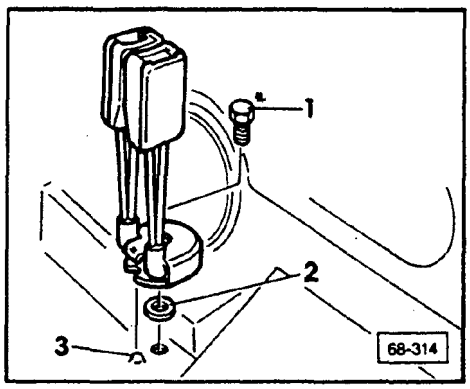

▶ **Fig. 3 Rear seat belt, right inner attachment, installing**

1 — 50 Nm (37 ft lb)
2 — seal
3 — weld projection

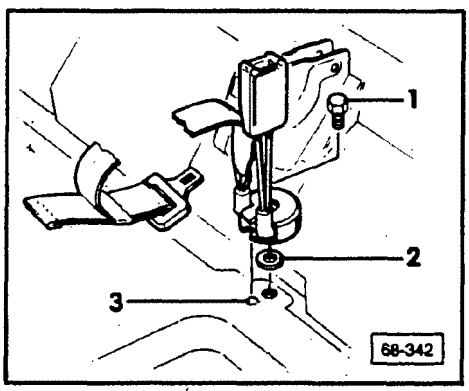

▶ **Fig. 4 Rear seat belt, left, inner attachment, installing**

1 — 50 Nm (37 ft lb)
2 — seal
3 — weld projection

cardiagn.com

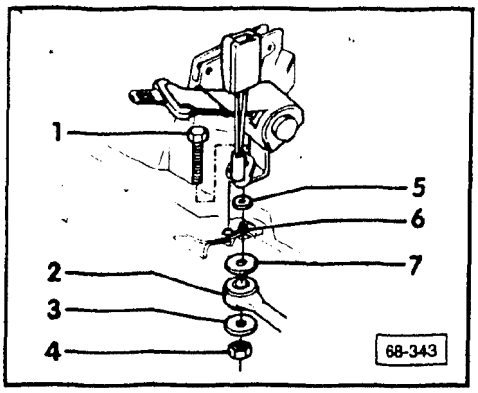

▶ **Fig. 5 Rear seat belt, left, inner attachment (with retractor), removing**

1 — hex head bolt
- 50 Nm (37 ft lb)

2 — anchorage rod
3 — washer
4 — hex nut
- 40 Nm (29 ft lb)

5 — seal
6 — weld projection
7 — washer

- remove nut **4**
  - must be removed before retractor is removed
- loosen bolt **1**
- remove retractor mounting (inside vehicle)

Rear seat belt, left, inner attachment (with retractor), installing

Install all components in reverse order, noting the following:
- torque bolt 1 to 50 Nm (37 ft lb)
- torque hex nut **4** to 40 Nm (29 ft lb)

cardiagn.com

CONTINUED IN THE

BEGINNING OF NEXT ROW

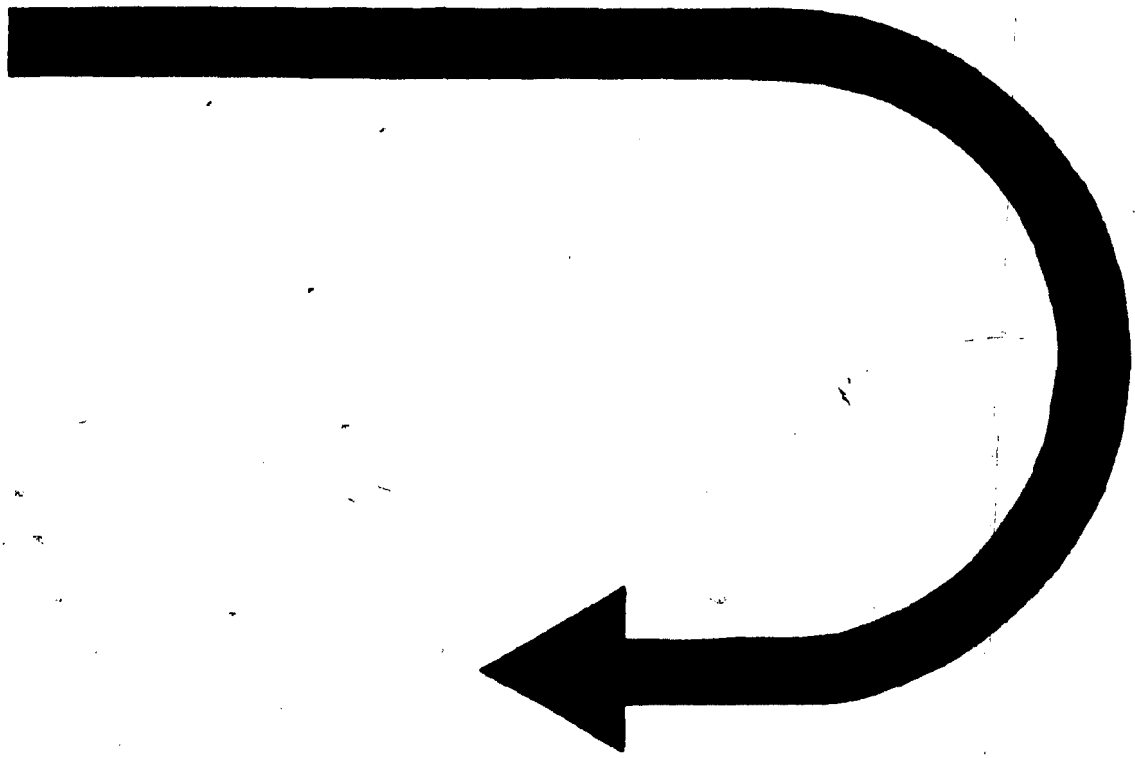

cardiagn.com

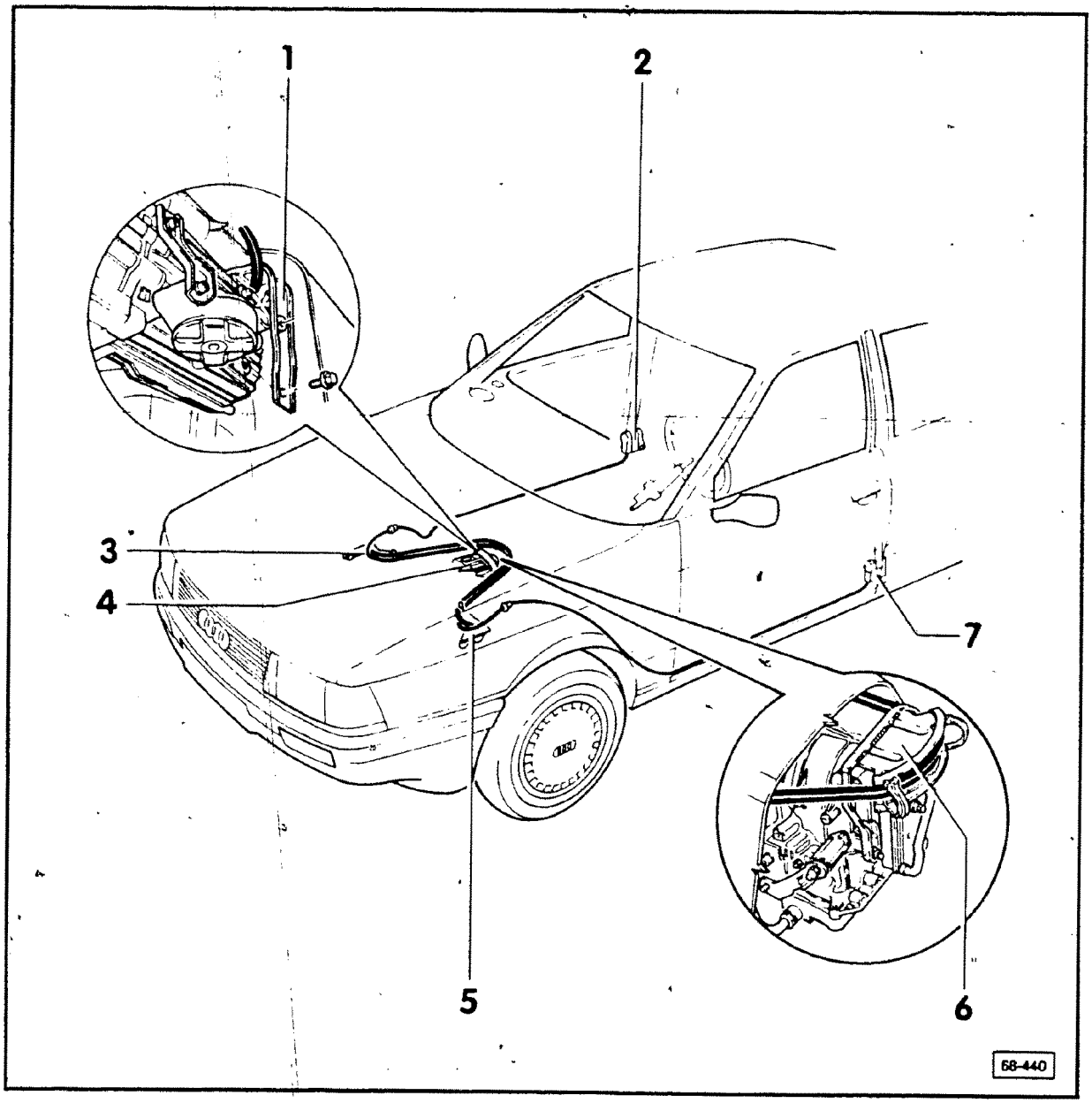

1 — **Cable bracket**
attached to cable guide bracket

2 — **Automatic seat belt with retractor cable, right**

3 — **Retaining bracket, right**

4 — **Cable guide bracket**
on end of transmission, also 7

5 — **Retaining bracket, left**

6 — **Cable guide bracket**, also 7

7 — **Automatic seat belt with retractor cable, left**

cardiagn.com

Automatic seat belt tensioning, checking

Note

After an accident, if only one portion of system operates, both cables, retaining brackets, retainer clips, and the plastic barrel clips **must be** replaced.

Seat belt will not move or retract

If the seat belt cannot be pulled out or does not roll up automatically, the automatic seat belt tensioning system has been activated.

Note

Seat belt and retractor cables are supplied as one unit.

Individual components may be replaced if defective and the automatic seat belt tensioning system has not been activated.

cardiagn.com

Automatic seat belt tensioning system, removing

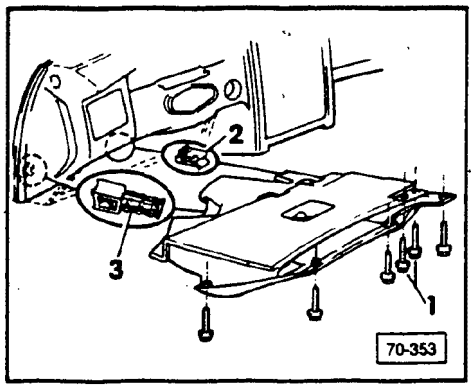

Driver's side

- remove sill plate inner trim, and rear side panel
- unbolt seat belt and retractor from B-pillar
- remove shelf from under instrument panel on driver's side
- pull door inner seal off flange in area of lower A-pillar

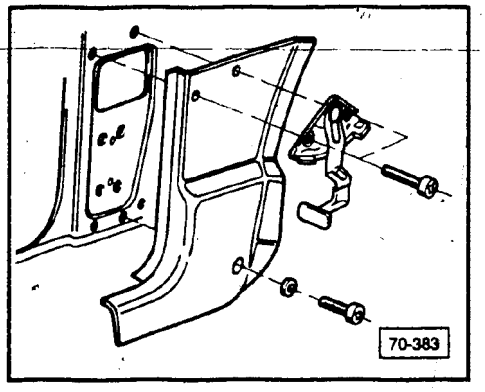

- remove lower left A-pillar trim panel and hood release lever
  - lower screw is countersunk into trim

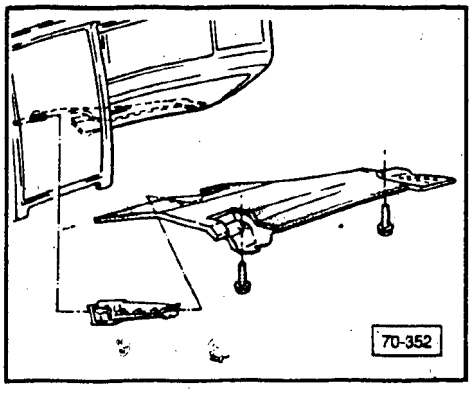

Passenger side

- remove screws and take out shelf under instrument panel on passenger side
- pull door inner seal off flange in area of lower A-pillar

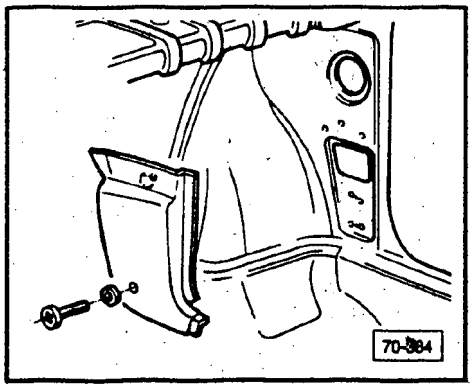

- remove lower right A-pillar trim panel
  - lower screw is countersunk
- pull carpet up and in toward center on both sides
- cut into deadener material at area of bowden cable

cardiagn.com

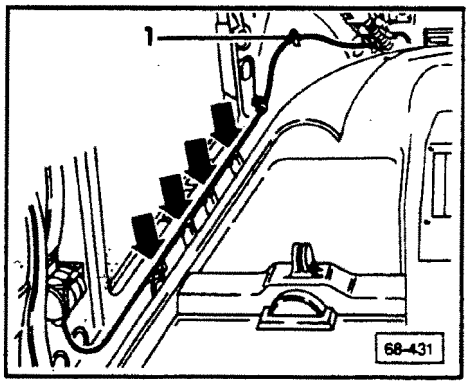

Note

The left side bowden cable is routed on top of the sound deadener.

- pull bowden cable out of retaining clips (**arrows**) along sill
- cut off tie wrap **1**

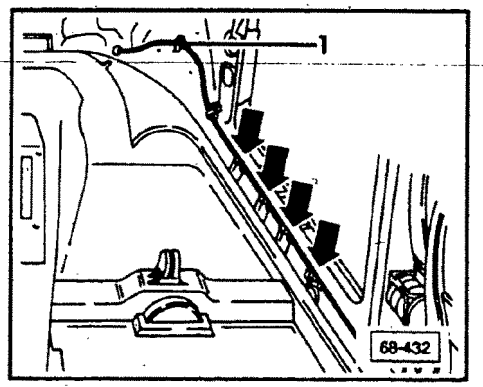

Note

The right side bowden cable is routed under the sound deadener.

- pull bowden cable out of retaining clips (**arrows**) along sill
- cut off tie wrap **1**

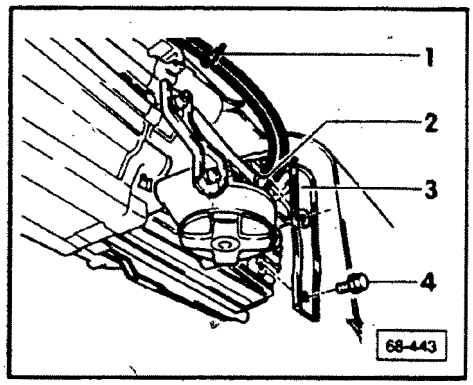

- unscrew bolts **4**, and remove cable bracket **3** from retainer **2**
  - cut off tie wraps **1** on both sides

Note

In production the automatic seat belt tensioning cables are held to the cable bracket with adhesive tape. When repairing belt system, the adhesive tape must be removed.

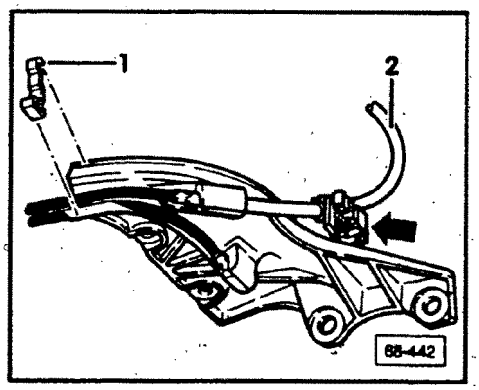

- remove cable from clip **1** on retaining brackets
  - when removing left side tensioning cable, push out bowden cable **2** from brake clip (**arrow**) on left bracket
- unhook tensioning cable from retaining brackets
  - frozen bowden cable sleeves or tensioning cable ends may be driven out with a punch

cardiagn.com

Note

Plastic barrel clips on bowden cable and retractor cable ends must always be replaced.

Retaining clips for cables on retaining brackets must always be replaced.

- push out rubber grommet in front panel
- pull bowden cable through hole in front panel

Automatic seat belt tensioning system, installing

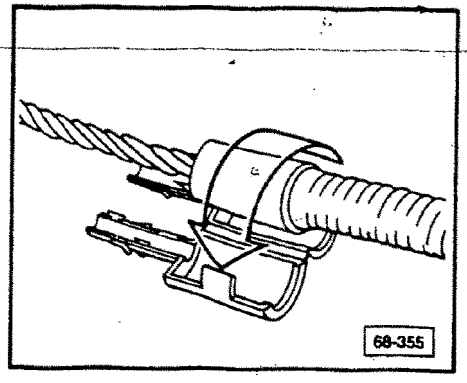

- install new plastic barrel clip on end of bowden cable

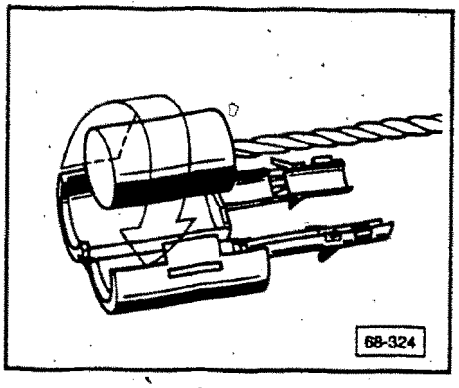

- install new plastic barrel clip on retractor cable ends

CAUTION

Do not apply grease to plastic barrel clips, retaining brackets, cable ends or cable mounting grooves in retaining brackets.

Note

If both retractor cables are being replaced, install left cable first.

- mount automatic seat belt and retractor to B-pillar
- lightly lubricate bowden cable in area of grommet
- press grommet into hole on cowl
  - ensure grommet is properly fitted into front panel to prevent leaks

cardiagn.com

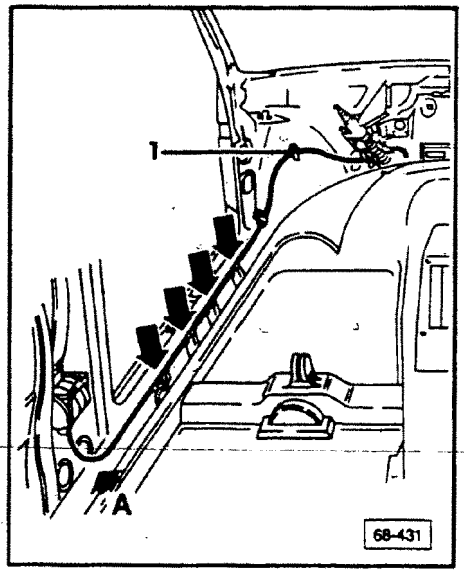

- place retractor cable on left door sill with enough slack so curve (**arrow A**) is smooth and kink free
  - cable goes over sound deadener material
  - install tie wrap 1

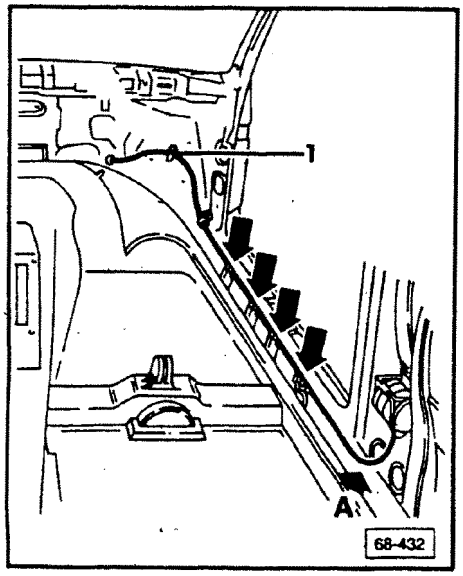

- place retractor cable on right door sill with enough slack so curve (**arrow A**) is smooth and kink free
  - cable goes under sound deadener material
  - install tie wrap 1

cardiagn.com

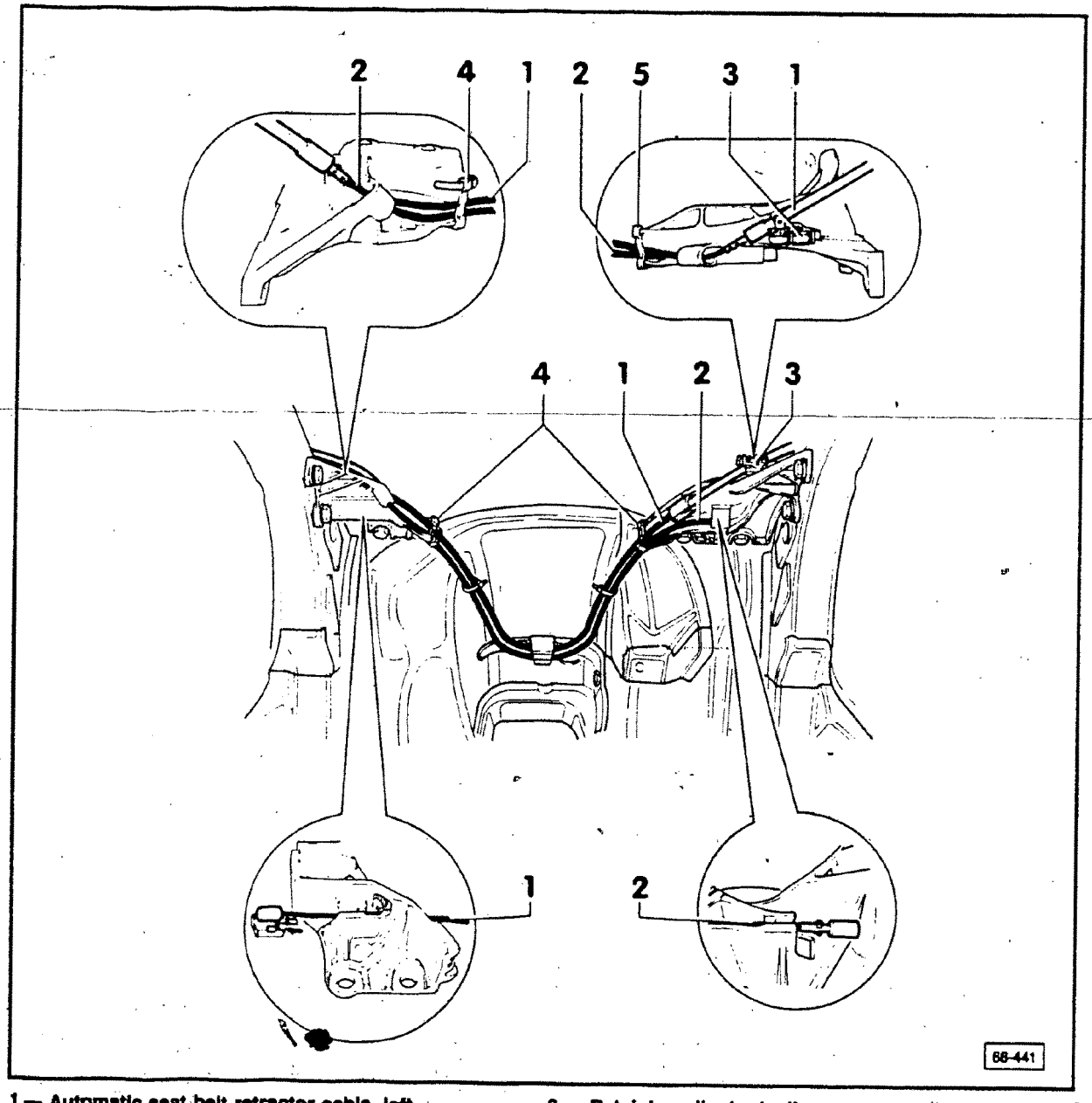

1 — **Automatic seat belt retractor cable, left**
routed on left retainer bracket and top of cable retaining bracket on transmission

2 — **Automatic seat belt retractor cable, right**
routed on right retainer bracket and bottom of cable retaining bracket on transmission

3 — **Retaining clip, brake line**

4 — **Retaining clip, cable**
must always be replaced when repairing an activated tensioning system, page 68.10

5 — **Retaining clip, cable**
must always be replaced when repairing an activated tensioning system, page 68.10

CAUTION

Cables must not cross when routed. Cables fit into grooves on retaining brackets.

cardiagn.com

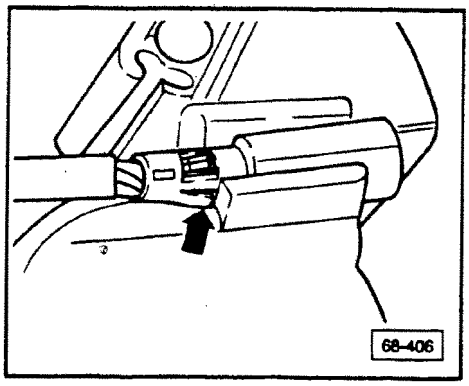

- hook left/right bowden cable onto retaining brackets so plastic barrel clip is centered against slot in retaining bracket
  - tab (**arrow**) must rest against slot, as shown
- insert bowden cable onto retaining bracket from top in brake line clip
- route retractor cables around cable guide bracket on transmission

Note

Left retractor cable end is inserted through hole in retaining bracket then into slot.

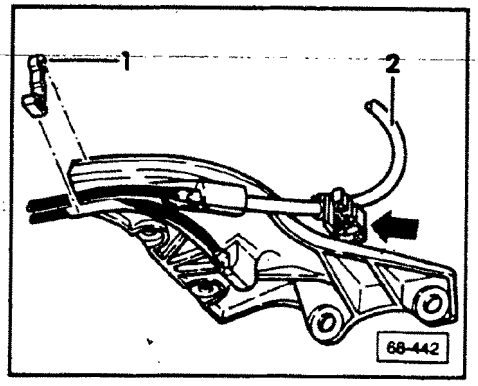

- insert left/right cable into slots on retaining bracket
- check fit of plastic barrel clips
  - tabs must fit against retaining bracket
- install new retaining clips **1** and arrow on retaining brackets

CAUTION

Retaining clips must be installed correctly to ensure proper function of the automatic seat belt tensioning system.

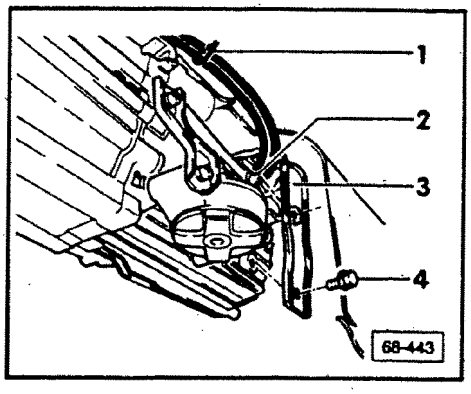

- push cable bracket **3** from behind over both cables up to stop on cable guide bracket
- push cable bracket **3** onto retainer **2** on cable guide bracket and secure with bolt **4**
  - 40 Nm (29 ft lb)
- ensure both cables are in slots on cable guide bracket, under cable bracket **3**
- secure cables on both sides with tie wraps **1**

Note

Both cables must be a distance of 30 ±10 mm (1.2 ±25/64 in.) from cable retainer on transmission. If **not**, check and correct positioning of plastic barrel clips in slots on retainer brackets and verify correct cables are installed.

cardiagn.com

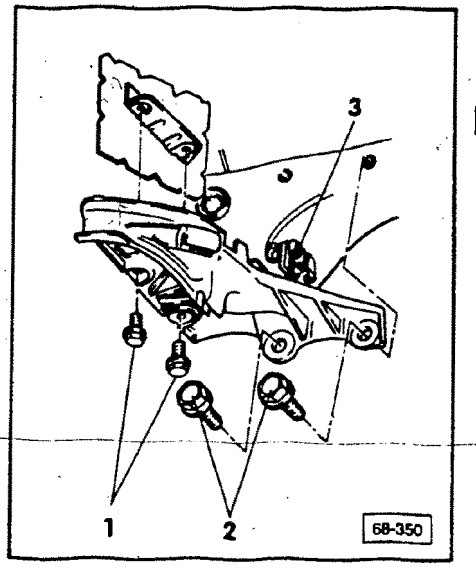

Retaining brackets, removing/ installing

Left, removing

- remove bolts **1**, **2**, and brake line clip **3**

Left, installing

Reinstall in reverse order, noting the following:

- torque bolts **1**
  - 25 Nm (18 ft lb)
- torque bolts **2**
  - 75 Nm (55 ft lb)
- reinstall brake line clip **3**

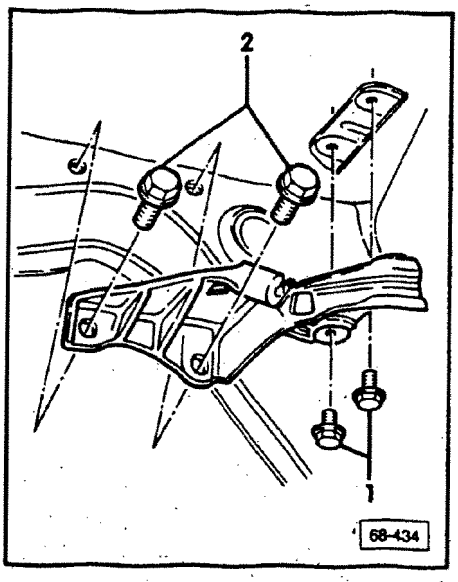

Right, removing

- remove bolts **1**, **2**

Right, installing

Reinstall in reverse order, noting the following:

- torque bolts **1**
  - 25 Nm (18 ft lb)
- torque bolts **2**
  - 75 Nm (55 ft lb)

cardiagn.com

Inside rear view mirror, removing

- remove mirror from base with 2.0 mm (5/64 in.) hexagon socket wrench

Inside rear view mirror, installing

Reinstall in reverse order of removal.

Inside rear view mirror mounting plate, installing

Parts required

> **CAUTION**
>
> Part numbers are listed for reference only. Always consult with the Parts Department for latest information.

Description	Part Number
Mirror repair kit	175 898 587

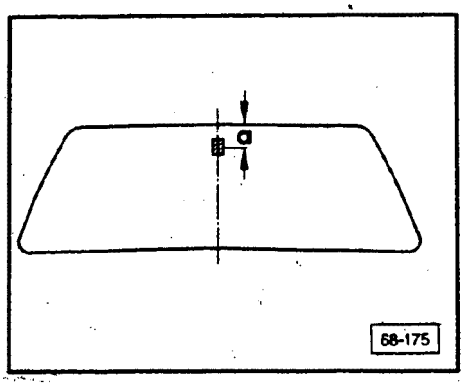

Note

Use adhesive at room temperature only and note instructions on container. Adhesive hardens fully after several hours.

- mark location for plate on outside of windshield
  a = 130 mm (approx. 5.0 in.)
- clean contact area on inside of windshield and contact side of plate with activator

Note

Previously used mirror mounting plates must have the contact surface ground lightly before reuse.

- spray on activator and wipe dry
- spray activator onto cleaned contact area of windshield and let dry for approximately one-two minutes
- apply one drop of metal adhesive to center of cleaned contact area of plate
- press plate onto prepared contact area of windshield and hold in position for approximately 30 seconds
- attach mirror to plate and tighten socket head screw with 2.0 mm (5/64 in.) hexagon wrench
- remove surplus activator

cardiagn.com

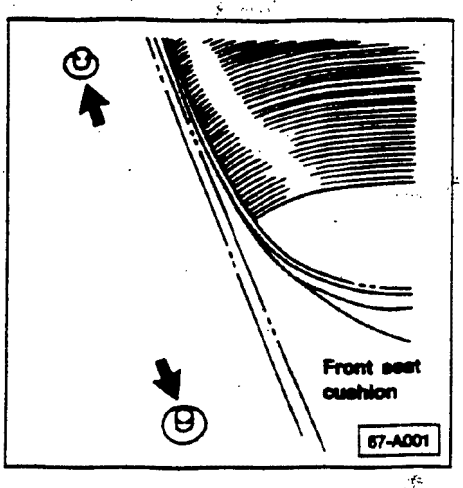

Accessory floor mats, installing

Audi vehicles are equipped with floor mat retention posts in both front foot wells.

Specially designed floor mats must be attached to these posts (**arrows**).

- place front seats into rear most position
- remove factory installed mats, where applicable
- turn off ignition switch

CAUTION

Do not use protective floor mats other than Audi approved mats.

Be sure to have the mats engaged to the retention posts and secured. **Do not install more than one set of floor mats as they may shift forward and interfere with the floor pedals.** Restricted pedal movement may cause loss of vehicle control and personal injury.

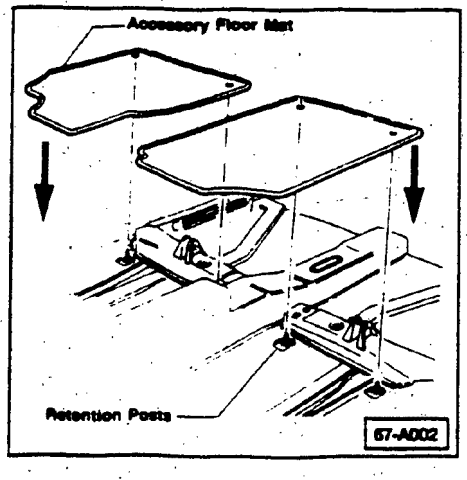

- place accessory floor mat over retention posts (as shown)
- press mats firmly downward (**arrows**)

cardiagn.com

Accessory floor mats, removing

- grasp corner of mat and pull straight up off retention post
- repeat procedure at opposite corner

Note

Leave all instruction sheets with owner's manual for future reference.

cardiagn.com

CONTINUED IN THE

BEGINNING OF NEXT ROW

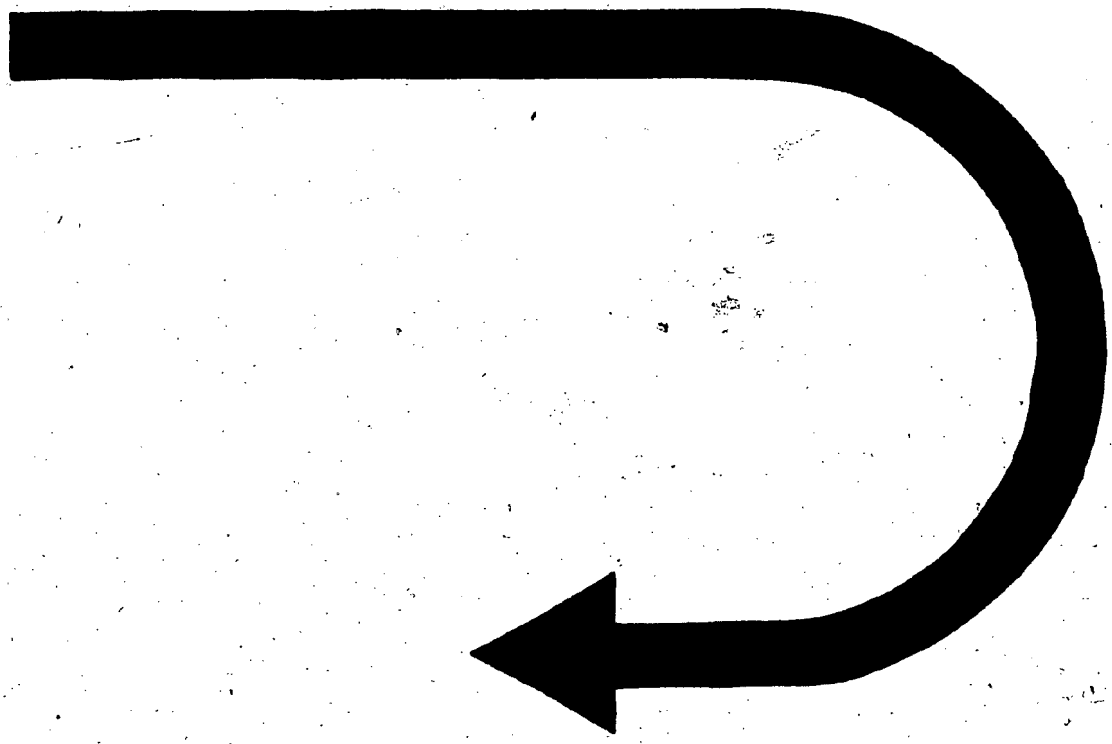

cardiagn.com

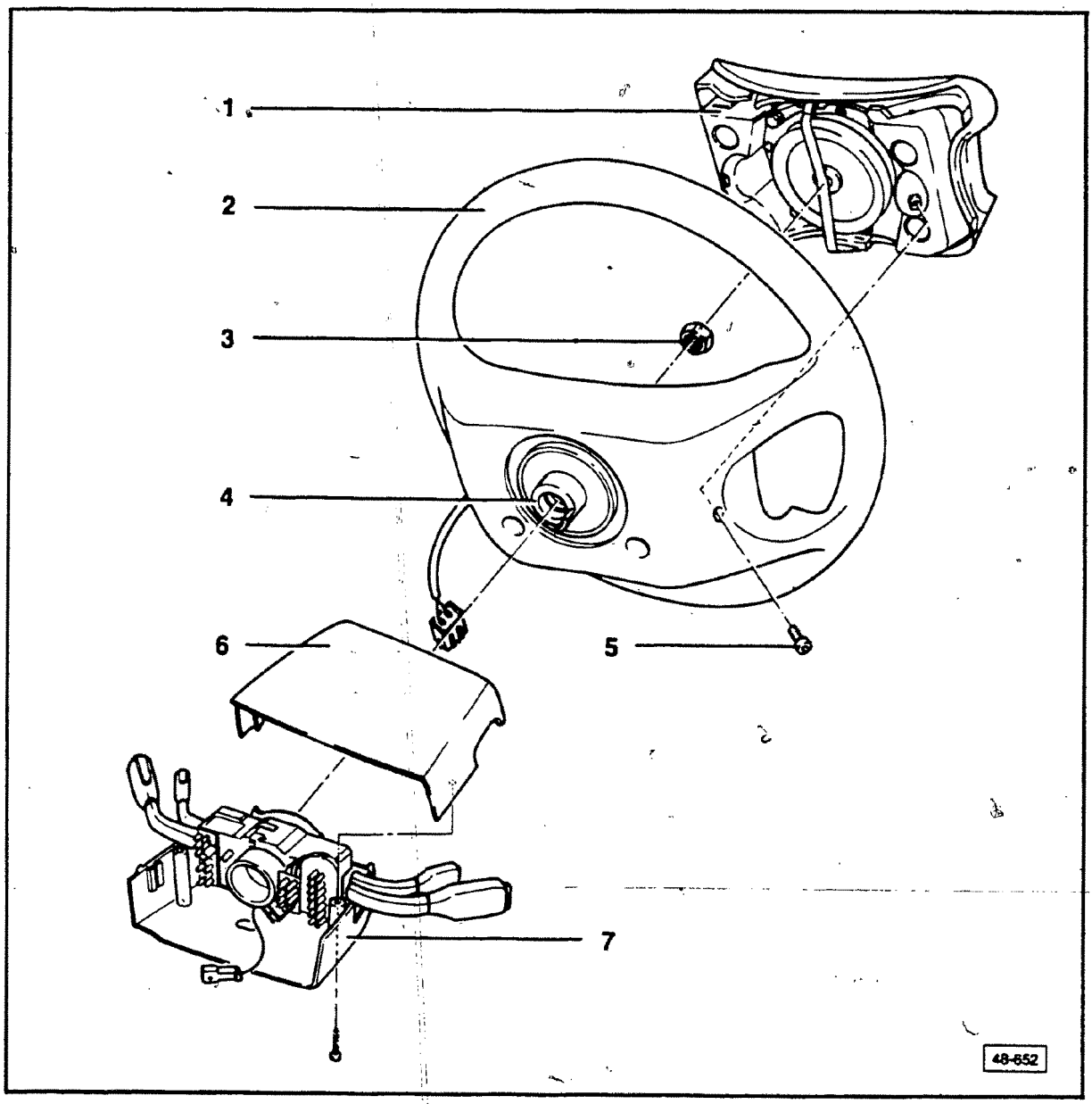

WARNING

Airbag System

To prevent personal injury or airbag system failure, **ONLY TRAINED PERSONNEL** should disassemble, assemble, or service the airbag system.

CAUTION

Always disconnect the voltage supply to the airbag system when doing repairs requiring the removal of airbag components.

Note

Beginning with model year 1990, all Audi 80/90/Coupe vehicles are equipped with a driver airbag housed in the steering wheel assembly.

Do not weld or straighten steering components.

Replace all self-locking fasteners.

cardiagn.com

1 — **Airbag unit**
- removing/installing, page 68.38

2 — **Steering wheel**
- install in centered position, with turn signal lever in Neutral and front road wheels straight ahead
- replacement steering wheel must be factory-released, and equipped with canceling ring and contact ring

> **CAUTION**
>
> Do not place any stickers or covering on a steering wheel equipped with an airbag.

3 — **Hex nut — 40 Nm (30 ft lb)**

4 — **Canceling ring/contact ring assembly**
- can be replaced separately from wheel

5 — **Mounting bolt for airbag unit — 6 Nm (53 in. lb)**

6 — **Cover, steering column switch**

7 — **Steering column switch in mount**

cardiagn.com

Connector for voltage supply, installed position

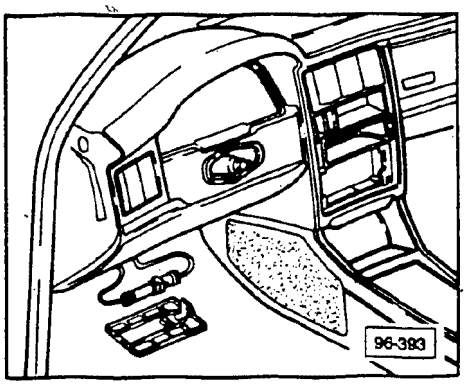

- connector color: red
- "airbag" marked on connector

CAUTION

Always disconnect the voltage supply connector when doing repairs requiring removal of parts of the airbag system.

cardiagn.com

Safety measures, airbag system

CAUTION

Testing, assembly and repair work on the airbag system must only be conducted by trained Service Department personnel.

Always observe the following safety measures when working on the airbag system:

- testing of the airbag system is never conducted with a test light or voltmeter. Use the special airbag tester **VAG 1619** and test the system only in an installed condition
- airbag system components must not be opened or repaired. Always use new parts
- the airbag unit has an expiration date. The date can be found on a sticker behind the driver's sun visor. After ten years the airbag unit must be replaced, see page 68.48. For safety reasons all other component parts of the airbag system must also be replaced at this time
- if the airbag unit or triggering unit has been dropped from a height of 0.45 meters (18 in.) or more, do not install the component into a vehicle
- always replace airbag system components which have been mechanically damaged (bubbles, cracks, etc.)
- disconnect the negative battery cable and cover the battery terminal during all work on the airbag system. Also, separate the red, single-pin connector (marked with the word "airbag") for the power supply behind the instrument panel
- before installing a computer memory saver device on cars with an electronic radio lock, separate the airbag power supply connector. Failure to do so may result in accidental activation of the airbag

cardiagn.com

CAUTION

- do not leave an undeployed airbag unit unattended if work is interrupted. Install into vehicle as soon as unit is removed from packaging.
- always place a removed airbag unit so that the horn pad is facing upwards
- the airbag unit must not be exposed to grease, or cleaned with any type of cleaning agent
- do not expose airbag units to temperatures above 100°C (212°F) even for brief periods while handling them during the repair process. Keep the airbag unit clear of heat sources such as heating plates, soldering irons, heat lamps, welding equipment and the like
- if the airbag has been deployed during an accident, replace the triggering unit, the airbag, and the spiral spring. Check all other components for damage and replace if necessary
- the storage, transportation and disposal of airbag units are subject to the laws for flammable solids

Disposal of airbag and triggering units

- active airbag gas generators: Remove an active (unit which has not been deployed) airbag gas generator carefully from the vehicle, and return to the Warranty Parts Test Center for proper disposal. **DO NOT deploy in vehicle,** see page 68.49
- deployed airbag gas generators do not have to be disposed of as a "hazardous waste" but can be disposed of with other trash, although it is recommended that for conservation reasons it be sent out with automotive metal scrap for recycling
- triggering units contain a mercury switch and must be disposed of in an approved manner

cardiagn.com

Airbag unit, removing/installing

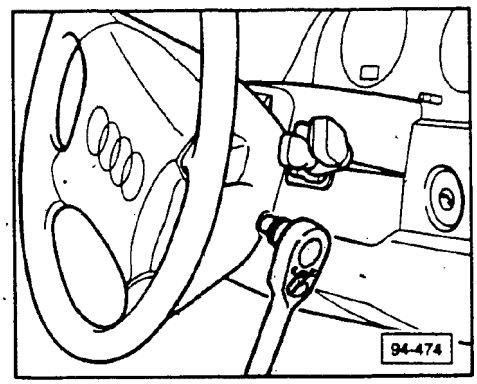

Removing

- disconnect voltage supply connector. See page 68.36
- unscrew Torx-head retaining bolts on either side of steering wheel
  - use standard Torx 30 bit

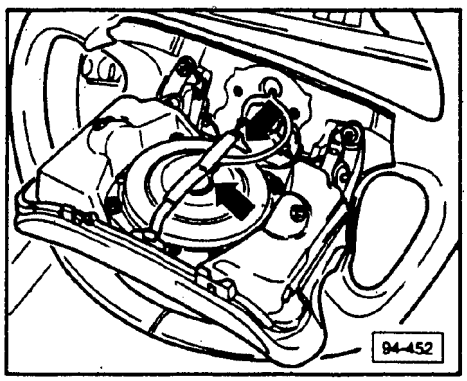

- detach airbag unit from steering wheel, carefully, and tilt downward
- lift up safety clamp (**top arrow**)
- disconnect wiring terminal (**lower arrow**) from airbag unit

> **CAUTION**
>
> DO NOT place removed airbag unit face down on vinyl horn pad side. Audi rings must be facing upward.

Installing

- connect wiring terminal to airbag unit
- position airbag unit in steering wheel
- fasten clamp securing airbag wiring terminal
- tighten Torx-head bolts
  - tightening torque: 6 Nm (53 in. lb)
- connect voltage supply connector

cardiagn.com

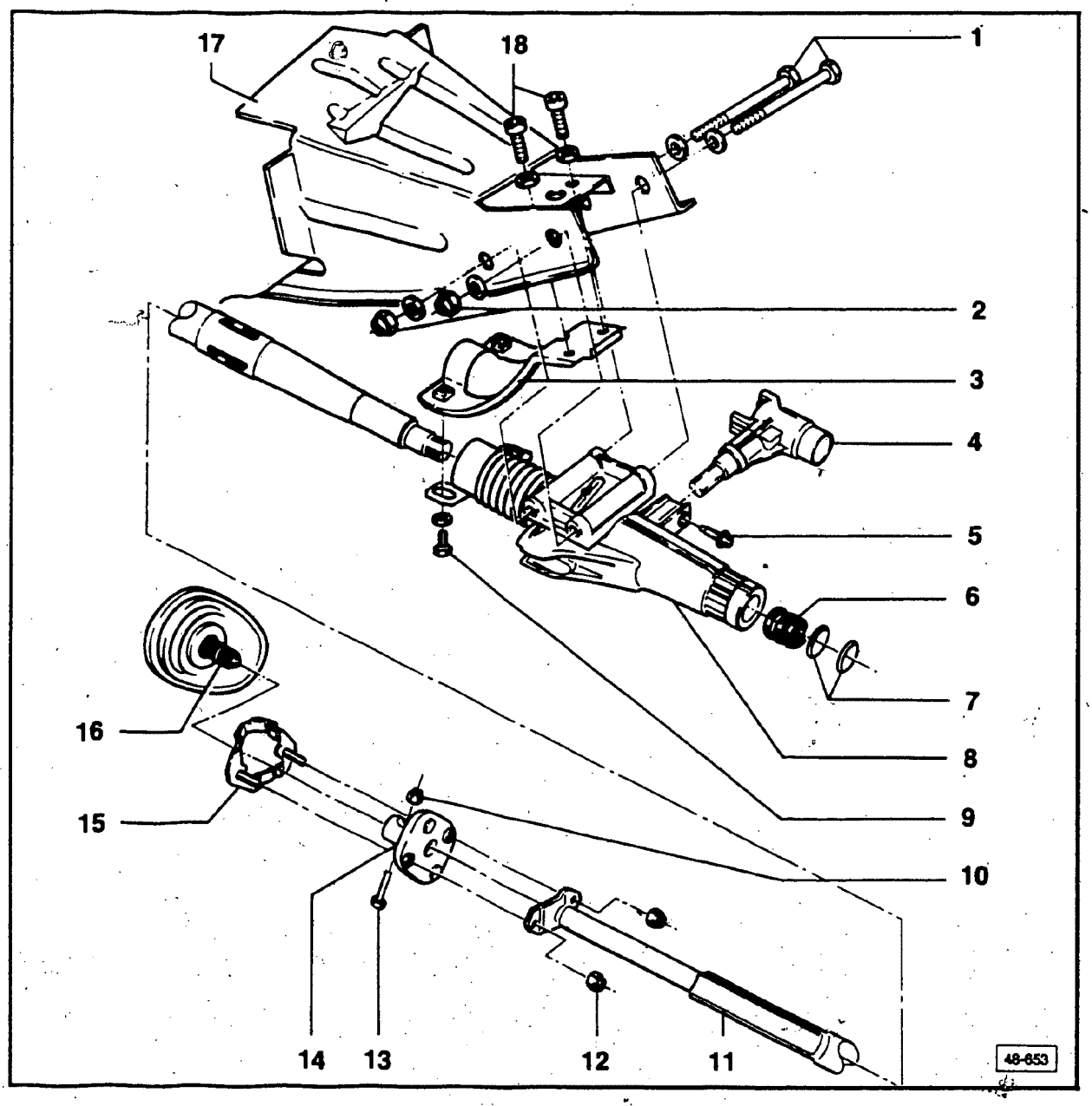

CAUTION

Always disconnect the voltage supply to the airbag system when doing repairs requiring the removal of airbag components.

Note

Beginning with the 1990 model year, all Audi 89/90/Coupe vehicles are equipped with a collapsible steering column, as well as an airbag system.

1 — **Hex head bolts**

2 — **Self-locking nuts — 35 Nm (26 ft lb)**

3 — **Mounting plate**
install to the support bracket (top) and to steering column tube (bottom)

4 — **Steering lock housing**
- position at steering column tube and fasten
- connect to ignition wiring connector

5 — **Torx bolt — 7 Nm (62 in. lb)**

6 — **Spring**
install on steering column (see page 68.45)

cardiagn.com

7 — **Lock washers**
- removing: grind down (carefully), then pry out with screwdriver

> **CAUTION**
>
> Grinding may create sparks. Protect instrument panel and windshield.
>
> Note during removal that washers are pre-tensioned.

- installing, page 68.45

8 — **Steering column tube**
- consists of upper and lower sections

> **CAUTION**
>
> Upper and lower sections of column tube have a red dot. Always replace the column tube if the red dot is worn or sheared off.
>
> If any play exists between upper/lower sections, replace column tube. Inspect for play, when repairing accident damage.

- the following may loosen upper/lower section connection:
  lubricants, solvents, temperatures over 100°C (212°F)
- do not hammer any part of the steering column
- bearing included as replacement part

9 — **Hex head bolt — 25 Nm (18 ft lb)**

10 — **Self-locking nut — 25 Nm (18 ft lb)**
always replace

11 — **Steering column, collapsible**
- removing/installing, page 68.41
- install up to stop, on column tube
- install free of strain

12 — **Self-locking nut — 25 Nm (18 ft lb)**

13 — **Bolt**
always replace

14 — **Flange tube**
- to install, slide onto steering pinion and bolt to steering column and retaining bracket
- as replacement part, has coupling disc riveted on

15 — **Retaining bracket**

16 — **Steering pinion**

17 — **Support bracket**

18 — **25 Nm (18 ft lb)**

cardiagn.com

Steering column, collapsible, removing/installing

Removing

- disconnect battery ground cable to disable airbag system
- place front road wheels in straight-ahead position
- remove airbag unit. See page 68.38
- remove fasteners (**arrows**) retaining cover for steering column switch assembly

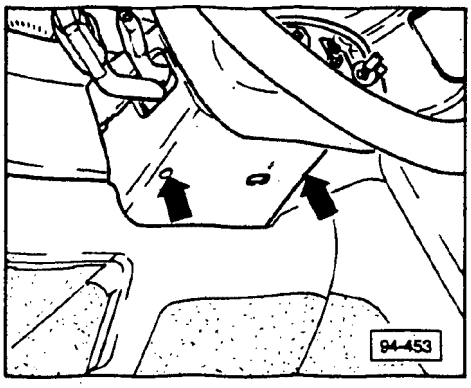

- disconnect airbag connector
  - located behind steering column switch cover
  - using screwdriver, press tab (**arrow**) on edge of casing
- remove steering wheel. See page 68.34

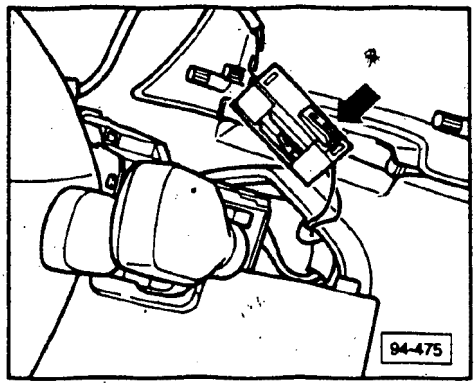

- loosen clamp on steering column switch and remove switch

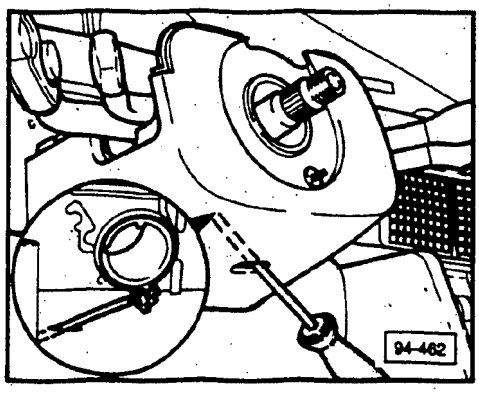

cardiagn.com

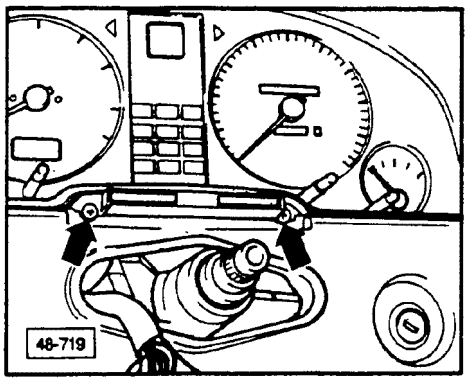

- remove screws (**arrows**) retaining instrument cluster
- disconnect and remove cluster assembly. See Repair Group 90
- disconnect ignition wiring terminal from lock assembly

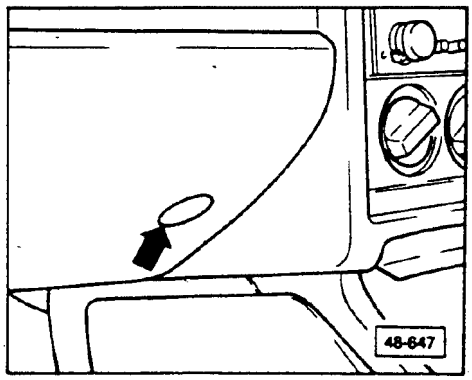

- unfasten knee bar (four bolts)
  - pry out capping (**arrow**)
- unclip diagnostic connectors from knee bar
  - position connectors aside
- remove knee bar

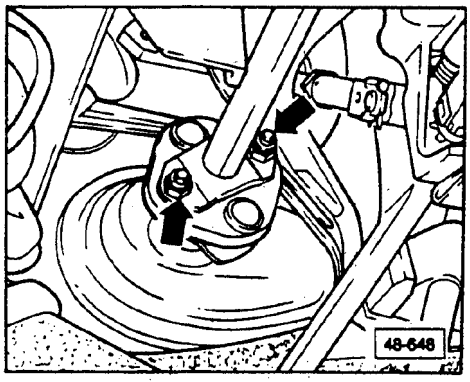

- detach base of steering column (**arrows**) from retaining bracket
- pry steering column away from boot, carefully
  - using screwdriver (approximately 15 mm)

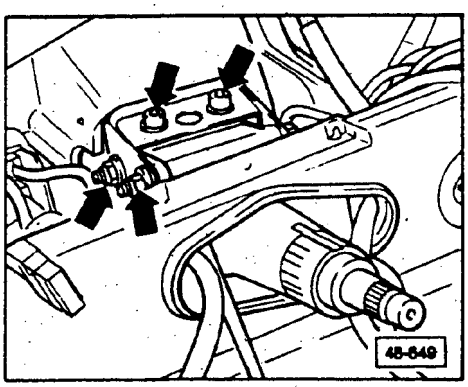

- remove fasteners (**arrows**) securing column tube/mounting plate to mounting bracket

cardiagn.com

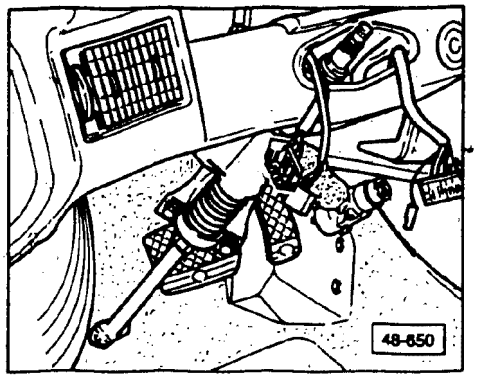

- push steering column downward, turning assembly until it can be removed from beneath instrument panel

Installing

- insert column assembly, from below, up through instrument panel
- position column assembly/mounting plate at mounting bracket. Insert bolts
- insert ignition key in ignition lock for steering column
- unlock steering column lock so that column can be turned as needed
- clamp base of steering column against flange tube and retaining bracket, using pliers. Bolt together

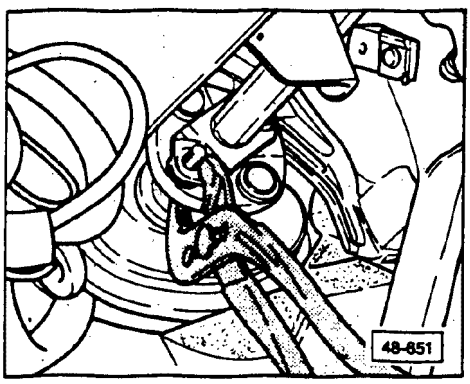

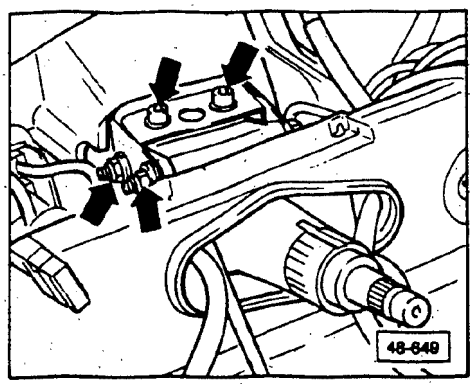

- tighten mounting hardware (**arrows**) for column assembly and bracket
- connect ignition wiring terminal to steering lock assembly

cardiagn.com

Note

For procedures to install spring and new lock washers, see page 68.45.

- install instrument cluster
- connect airbag wiring
- install steering column switch and cover
- install steering wheel. See page 68.34.

CAUTION

Do not place any stickers or covering on a steering wheel equipped with an airbag.

Note

Steering wheel must be centered, when front wheels are in a straight-ahead position.

- connect battery ground cable
- check function of steering column switch
- position wiring behind knee bar panel and install panel

cardiagn.com

Lock washers/spring for collapsible steering column, pressing on

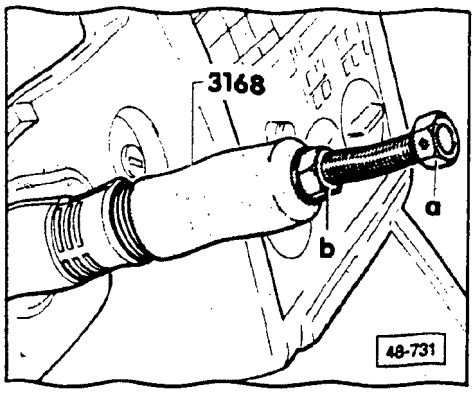

- install spring onto steering column
- place new lock washers on column
- install tensioner **3168** onto steering column up to stop (i.e. nut **b** threaded down)
- hold spindle **a** while tightening nut **b** until spring is compressed

> **CAUTION**
>
> Do not over-tighten spring, or bearing damage could result.

- loosen nut **b**
- remove tool from steering column

cardiagn.com

THIS FRAME INTENTIONALLY LEFT

BLANK

cardiagn.com

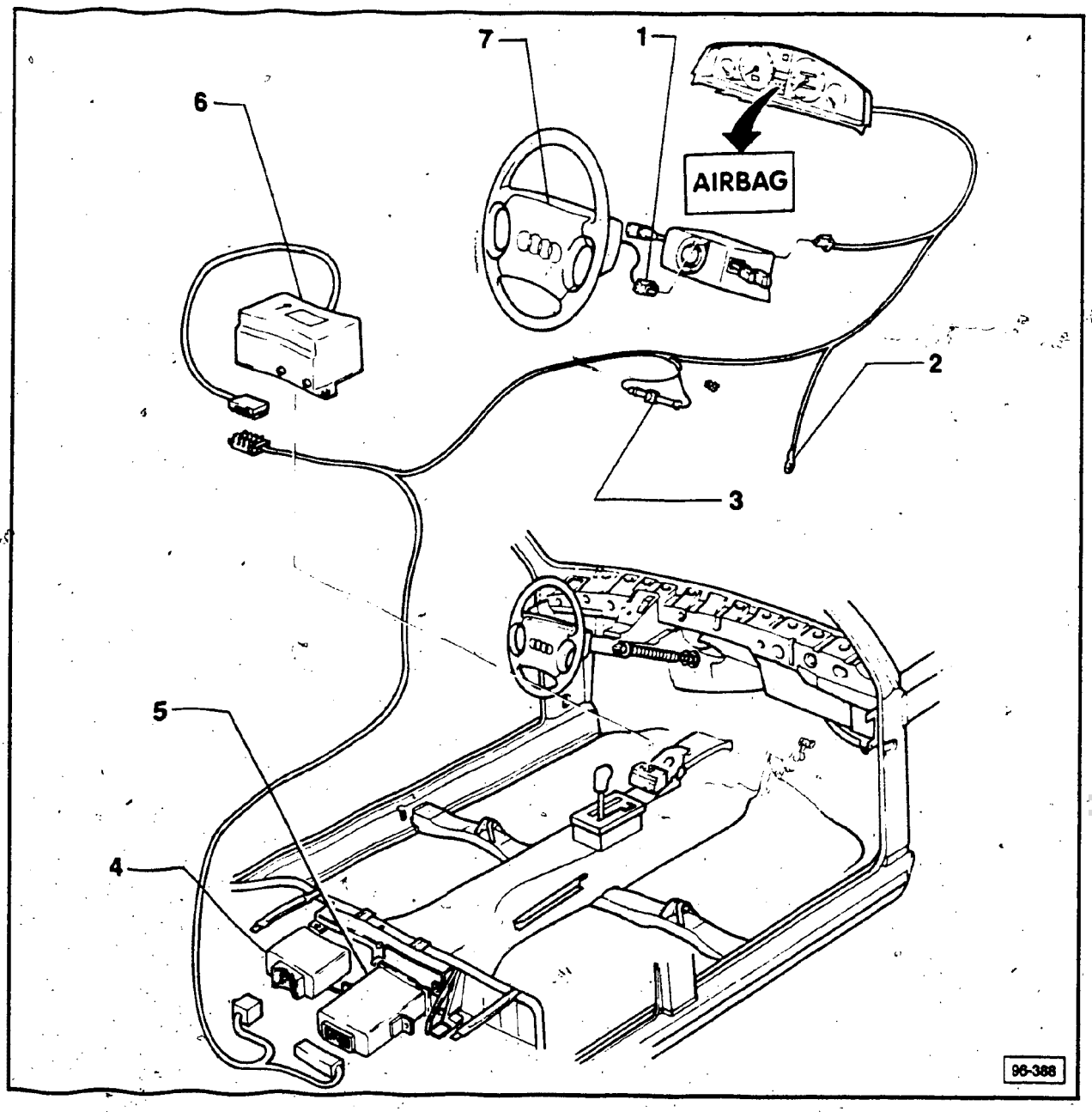

Note

Beginning with model year 1990, all Audi 80/90/Coupe vehicles are equipped with a driver airbag, housed in the steering wheel assembly.

After switching the ignition ON, the airbag warning light will light up for approximately 10 seconds while an electronic test cycle is completed. The airbag system is ready when the light goes out.

If the warning light does not go out: test airbag system with diagnostic unit **VAG 1619**, as described on page 68.58.

If the warning light fails to light: check bulb. If bulb is O.K., test airbag system with diagnostic unit **VAG 1619**, as described on page 68.57

When working on the airbag system, observe the safety measures listed on pages 68.37

For steering system repairs involving the airbag, see also Repair Group 48.

1 — **Connector, spiral spring**
spiral spring, removing/installing, page 68.55

2 — **Grounding point**
behind instrument panel

3 — **Connector, voltage supply**
always disconnect when working on airbag components
installed position, page 68.51

cardiagn.com

4 — **Energy reserve**
installed position, page 68.51

5 — **Voltage transformer**
installed position, page 68.51

6 — **Triggering unit**
installed position, page 68.51

7 — **Steering wheel with airbag unit**
removing/installing, page 68.53

CAUTION

Always disconnect the voltage supply to the airbag system when doing repairs requiring the removal of airbag components.

cardiagn.com

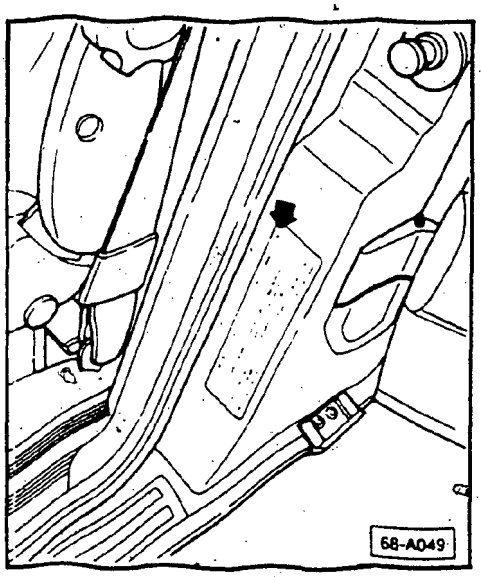

Airbag date sticker, replacing

Airbag has been deployed or replaced

- remove original airbag sticker from sunvisor
- use new airbag sticker and punch or cut out the month and year when airbag next requires renewal (10 years from date of replacement)
- install new label on driver's side sunvisor

Example

If airbag was renewed in August of 1990, punch out the month **08**, and the year **2000** as date of next renewal of airbag.

Replacing airbag sticker to new sunvisor

If, for any reason, sunvisor needs to be replaced:

- use new airbag sticker
- transfer correct month and year from original sticker to new sticker
- affix sticker to new sunvisor

Note

If the airbag sticker on sunvisor is missing, use the vehicle manufacture date (**arrow**), found on label on driver's side B-pillar as the original airbag installation date.

cardiagn.com

Disposal of active airbag unit

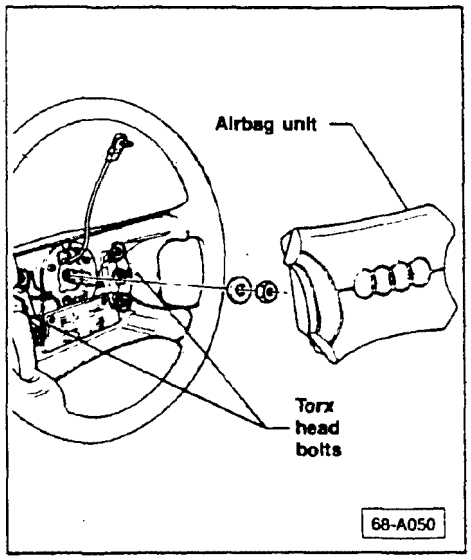

Active airbag gas generators present a potential danger. The units are classified as "Hazardous Materials" and must be disposed of in accordance with applicable regulations.

Remove an active (unit which has not been deployed) airbag gas generator carefully from the vehicle, and return to the Warranty Parts Test Center for proper disposal. For removal instructions, refer to Section 48 and 68 of the applicable Repair Manuals.

In situations where the airbag unit cannot be safely removed from the vehicle, contact your DSM.

Shipment of active airbag gas generators must be in accordance with 49 CFR 107.113 and 107.105 of the Department of Transportation (DOT) Hazardous Materials Regulations. In addition, a copy of the DOT exemption must be attached to the unit being shipped.

Note

A copy of the Department of Transportation (DOT) exemption is included with the replacement airbag unit supplied to the dealer from the Parts Depot. If exemption paper is missing, contact the Parts Depot.

Always use original box for shipping airbag unit to the Warranty Parts Testing Center.

cardiagn.com

Airbag system components, when to replace

- airbag system must be replaced 10 years after date of manufacture, see page 68.48
- replace airbag components that have fallen or have been dropped more than 18 inches, even if they appear undamaged
- replace parts of airbag system which are visibly damaged (dented, split, etc.) or have been exposed to grease or chemicals
- do not use airbag units that have been exposed to temperatures above 100°C (212°F) even if only for a brief period. Such exposure can be caused by heating plates, soldering irons, heat lamps, welding equipment and the like
- if airbag system has been triggered in an accident, replace triggering unit, airbag unit, and spiral spring. If airbag system has undergone previous unauthorized repair, replace components involved
- replace any components determined defective through diagnostic procedures (using airbag tester **VAG 1619**).

cardiagn.com

CAUTION

Always disconnect the voltage supply connector when doing repairs requiring removal of parts of the airbag system.

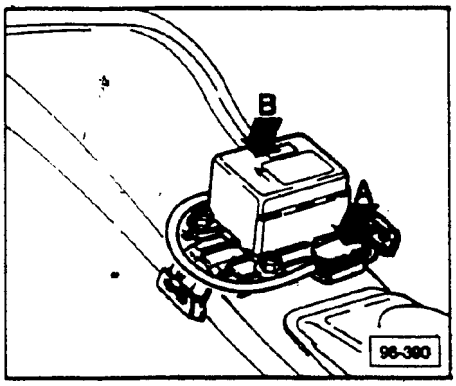

Triggering unit, installed position

- behind center console

A = connector
B = triggering unit

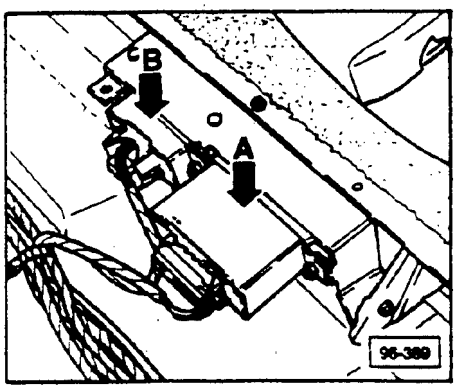

Energy reserve/voltage transformer, installed position

- under rear seat bench

A = voltage transformer
B = energy reserve

cardiagn.com

Computer memory saver, installing

The computer memory saver tool is used on vehicles with theft protected radios to prevent the radio from electronically locking when battery power is disconnected. Using the tool eliminates the need to re-activate (code) the radio after reconnecting battery power. See Service Circular, Tools — Equipment dated April 27, 1988.

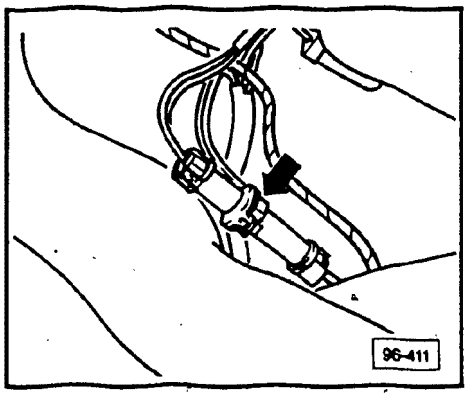

WARNING

ALWAYS separate airbag power supply connector before using computer memory saver. Failure to do so may result in accidental activation of the airbag.

- disconnect airbag power supply connector (**arrow**)
  - located under kneebar, driver's side
- install computer memory saver into cigarette lighter
- disconnect battery

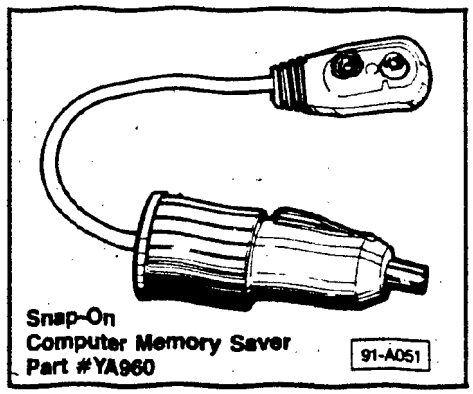

Snap-On
Computer Memory Saver
Part #YA960

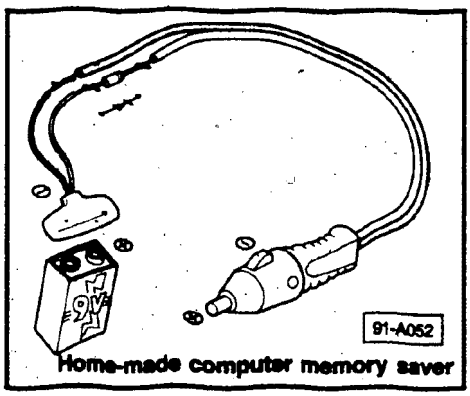

Home-made computer memory saver

cardiagn.com

Airbag unit/steering column switches, removing/installing

Removing

CAUTION

Before removing the steering wheel or steering column switches, disconnect the airbag voltage supply connector.

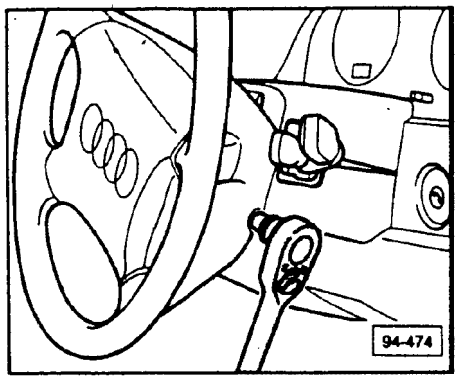

- turn steering wheel to straight ahead position
- remove mounting bolts with Torx handle (e.g. Hazet T 30)

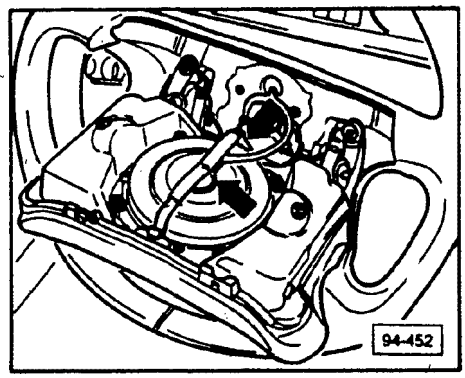

- detach airbag unit from steering wheel, carefully, and tilt unit downward
- lift up safety clamp (**top arrow**)
- disconnect wiring terminal (**lower arrow**)

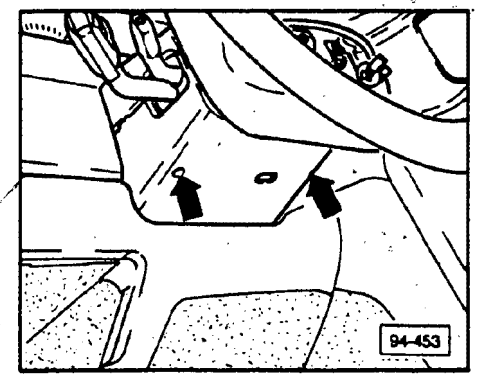

- remove screws (**arrows**) and upper trim for steering column

cardiagn.com

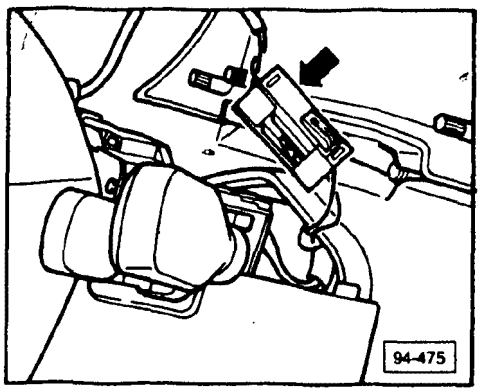

- separate connector for airbag unit (**arrow**)
- remove steering wheel.

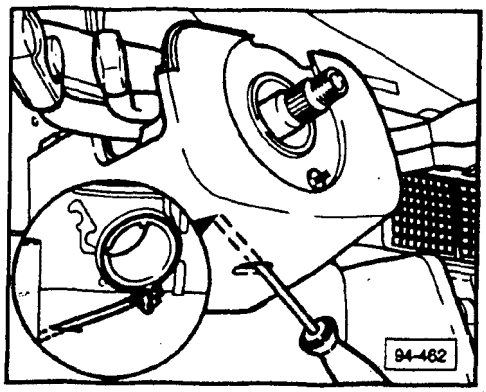

- loosen clamp of steering column switch
- remove switch

Installing

Install in reverse order of removal
- tighten airbag unit Torx bolts to 6 Nm (53 in. lb)

cardiagn.com

CONTINUED IN THE

BEGINNING OF NEXT ROW

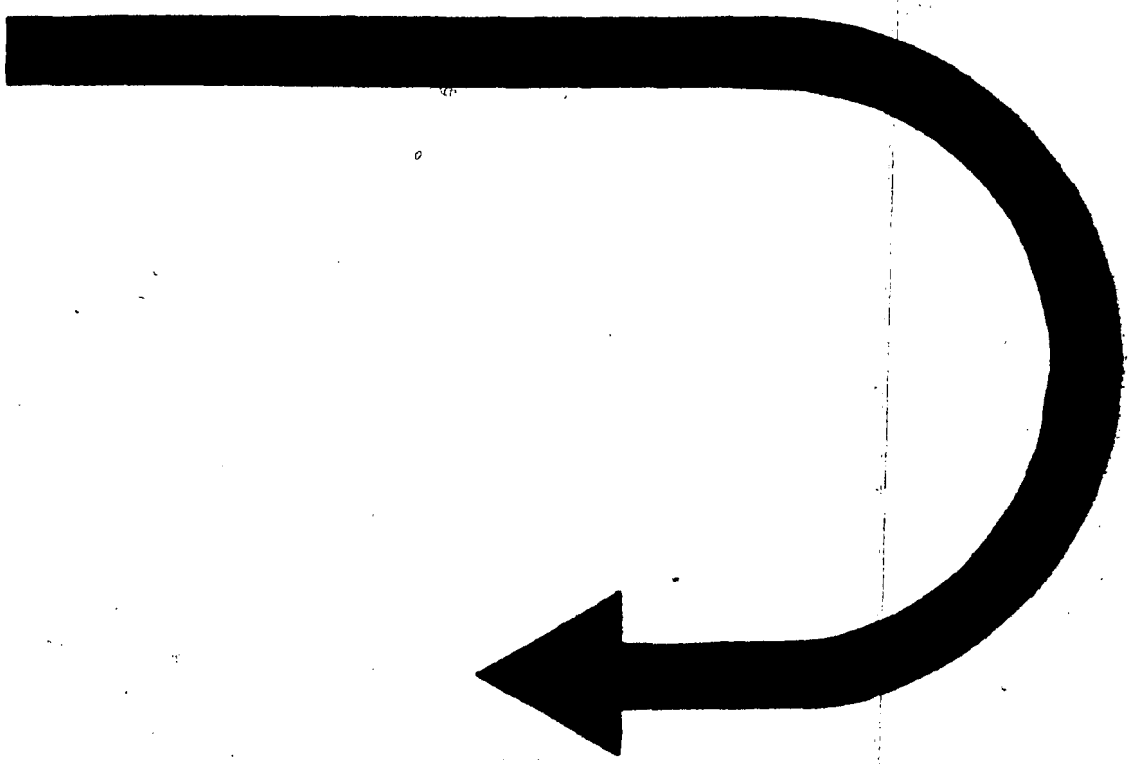

cardiagn.com

Spiral spring, removing/installing

Removing

- turn steering wheel to straight ahead position
- disconnect voltage supply connector. See page 68.36
- remove airbag unit and steering wheel

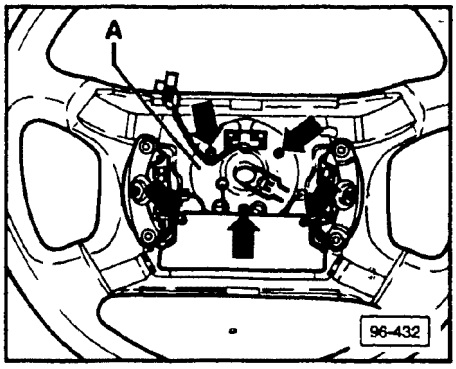

- remove screws (**arrows**)
- remove lock plate **A**
- pull back spiral spring to remove

Note

Do not twist spiral spring after removal

Installing

Install in reverse order of removal

> **CAUTION**
>
> Steering wheel must be centered (wheels straight ahead) before installing spiral spring. Failure to do so will damage spiral spring.

cardiagn.com

Spiral spring, checking

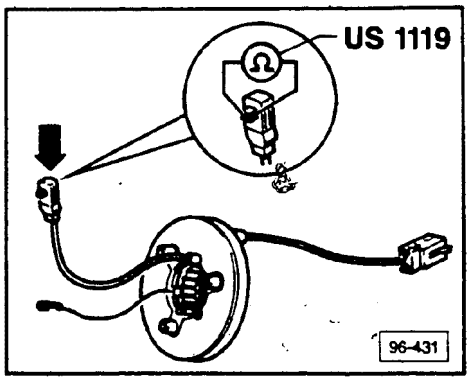

Note

The spiral spring must only be checked after it has been disconnected and removed.

- connect multimeter **US 1119** to airbag unit connector (**arrow**)
  - pre-set multimeter to ohm scale
  - resistance must be: 0 — 1Ω
  - replace spiral spring if specified value is not attained

cardiagn.com

Airbag system, testing

Preliminary steps

- check that airbag warning light is O.K.
- disconnect battery
- remove center console trim on right side
- separate 10-point connector for triggering unit

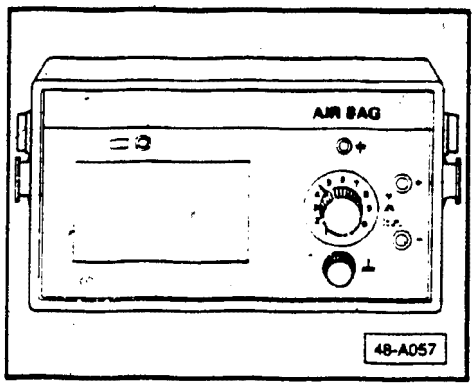

- connect airbag tester **VAG 1619** to wiring harness (triggering unit remains disconnected)
- connect battery

Testing

- test in sequence using following chart:

cardiagn.com

Switch position on tester	Test	Actuation	Specified result	Possible causes of deviation from specified result
1	voltage supply	ignition **ON**	tester light : **ON** Airbag warning light: **ON** tester display: battery voltage	battery charge **NOT OK** wiring defective
2	voltage transformer	ignition **ON**	tester light : **ON** tester display: 11-13	wiring, voltage transformer, or energy reserve unit defective
3	resistor, ignition circuit	ignition **ON** turn steering wheel to left and right stops	tester light : **ON** tester display: 2.15-3.4	spiral spring defective wiring defective
3	short circuit	ignition: **ON** push button	tester light : **ON** tester display: EE-E	wiring defective
4 and 5	not used			
6	check energy reserve charge	ignition: **ON**	tester light : **ON** display: greater than 9.0	wiring defective energy reserve defective
7	check energy reserve	ignition: **ON**	tester light : **ON** then goes out display: greater than 7.0 after light goes out	energy reserve defective
8-10	not used			

After testing

- disconnect battery
- disconnect tester **VAG 1619**
- reconnect 10-point connector for triggering unit
- connect battery

cardiagn.com

Illuminated vanity mirrors, repairing

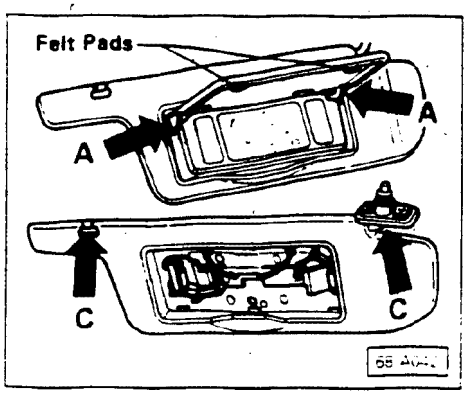

Version I

- rounded hinge corners (**arrows A**)
- twin felt pads on inside of mirror cover
- uses hinge pivots (**arrows C**) for voltage and ground contacts

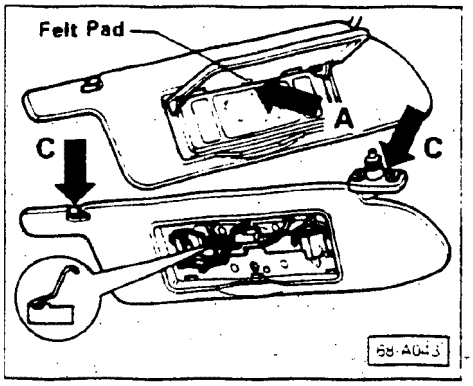

Version II

- center tab (**arrow A**), single felt tab
- contains microswitch activated by center tab when lid opened or closed (**inset**)
- uses hinge pivots (**arrows C**) for voltage and ground contacts

CAUTION
Part numbers are for reference only. Always check with your Parts Department for latest information.

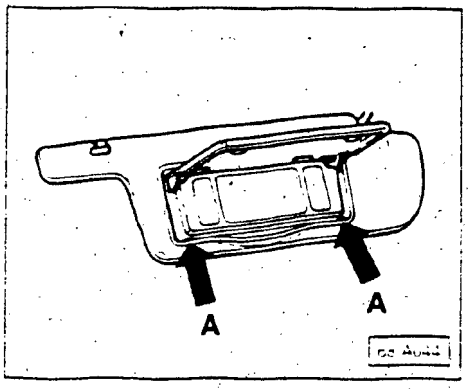

- lower sunvisor, open mirror cover
- using soft cloth to protect sunvisor, pry up at points **A** with small screwdriver
- remove mirror/lens assembly
- using volt/ohmmeter, check light circuit for continuity
- replace light bulb(s), Part No. **N 017 725 2** or repair connectors as necessary
  - microswitch is not available as a replacement part

cardiagn.com

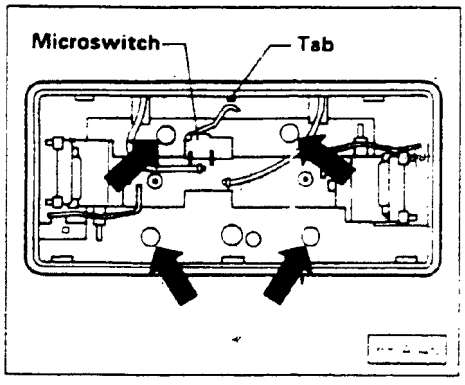

- inspect light assembly for tight fit in visor
- if loose or falling out of sunvisor, reglue the back side with adhesive, Part No. **AKD 476 KD5 05** or equivalent
  - additional glue may be added to the open vent holes (**arrows**) until a bead forms (Version II shown)

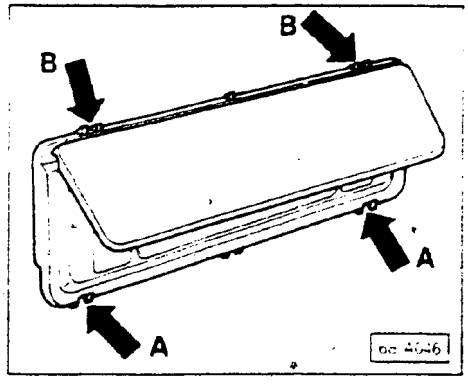

- reinstall mirror/lens assembly into light assembly, first at points **B**, then carefully apply pressure at points **A**, and push fully into light assembly
- check illuminated vanity mirror for proper function

Note

On Version II, if vanity light still does not function, or a loud clicking noise is heard when opening or closing mirror cover, the microswitch triggering arm does not meet center tab, and must be realigned.

Triggering arm, aligning

- remove mirror/lens assembly
- carefully bend microswitch triggering arm outward from light assembly
  - arm must contact center of tab to prevent slipping behind tab when opening mirror lid, as shown in illustration 68-A045
- reinstall mirror assembly into visor and test for proper function

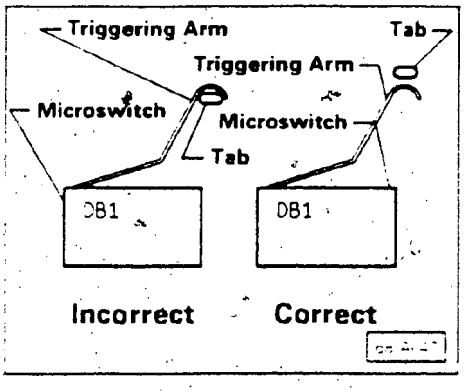

CAUTION
If new sunvisor is installed, the airbag date sticker, Part No. 443 010 028F, must be replaced.

Do not transfer the original sticker onto the replacement visor.

Refer to current repair literature for airbag sticker replacement instructions.

cardiagn.com

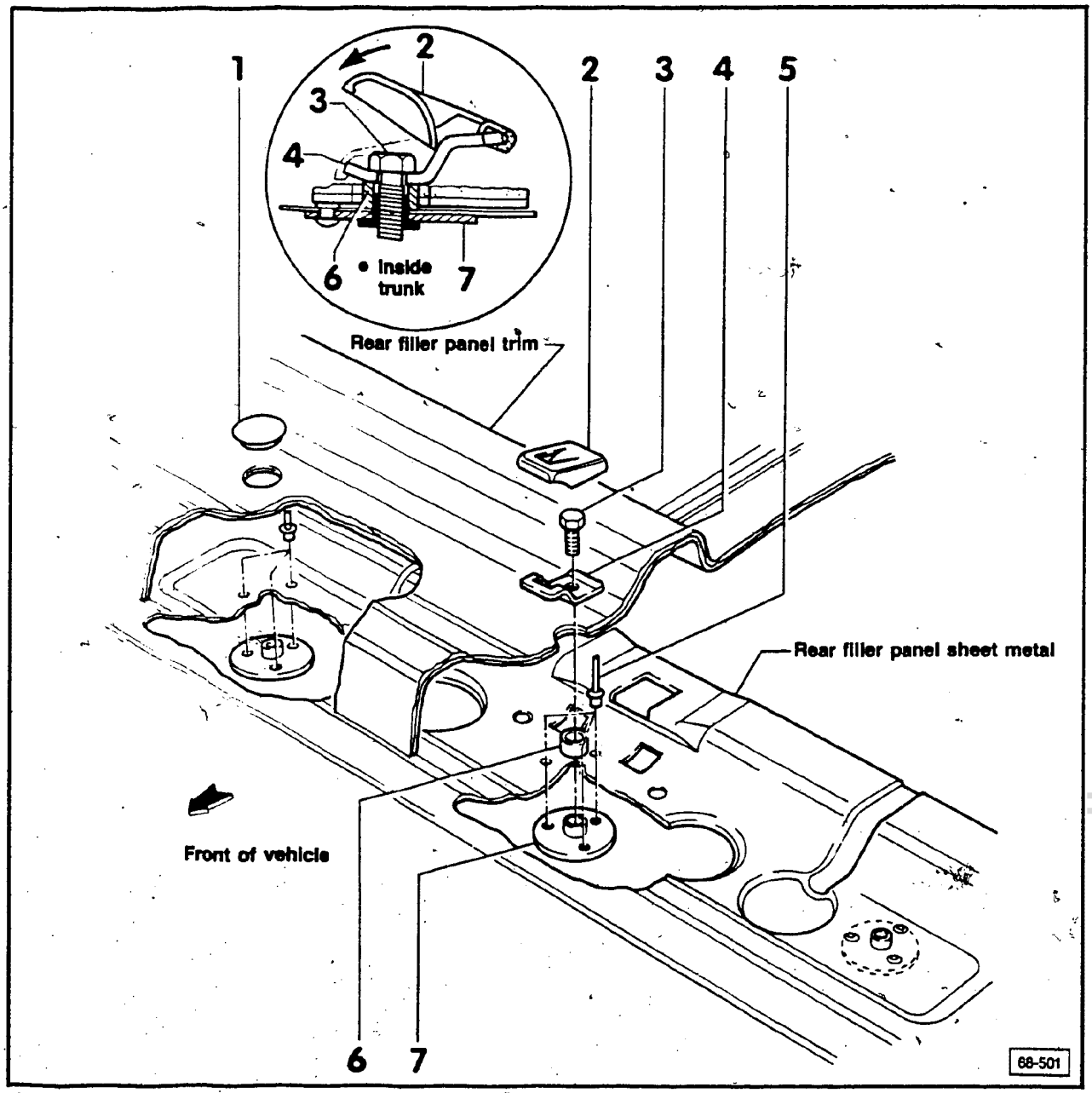

Note

Provision is made in the rear filler panel for the installation of up to 3 child restraint tether anchor points.

1 — Cap
covers hole in filler panel when anchor bracket is removed

2 — Cover
when installing, hook onto front of anchor bracket, then push down in rear (inset)

3 — Bolt — 25 Nm (18 ft lb)

4 — Anchor bracket

5 — Pop rivet
- secures washer 7 to rear filler panel sheet metal
- install from top (inside vehicle)

6 — Spacer sleeve

7 — Washer
- insert from inside trunk, secure with pop-rivets 5
- holes are pre-drilled in rear filler panel sheet metal

cardiagn.com

Child restraint anchorage, installing

- remove rear seat bench, seatback
- open rear lid
- from inside trunk locate anchorage points for washer **7**, pop-rivets **5** in rear filler panel sheet metal
  - in line between rear speakers
- mark center of anchor point hole on rear of filler panel trim

- remove rear filler trim panel
- drill a $24^{+0}_{-8.2}$ mm (approx. 61/64 in) hole in panel trim at point marked
- using pop-rivets **5**, mount washer **7** to underside of filler panel sheet metal
  - install pop-rivets from inside vehicle (top)

Vehicle (top)

- mount spacer sleeve **6**, anchor bracket **4**

- install bolt **3**
  - 25 Nm (18 ft lb)

- install cover **2** (**Inset**) onto anchor bracket

Note

Cap **1** is only used to cover hole in rear filler panel trim when anchor bracket is removed.

cardiagn.com

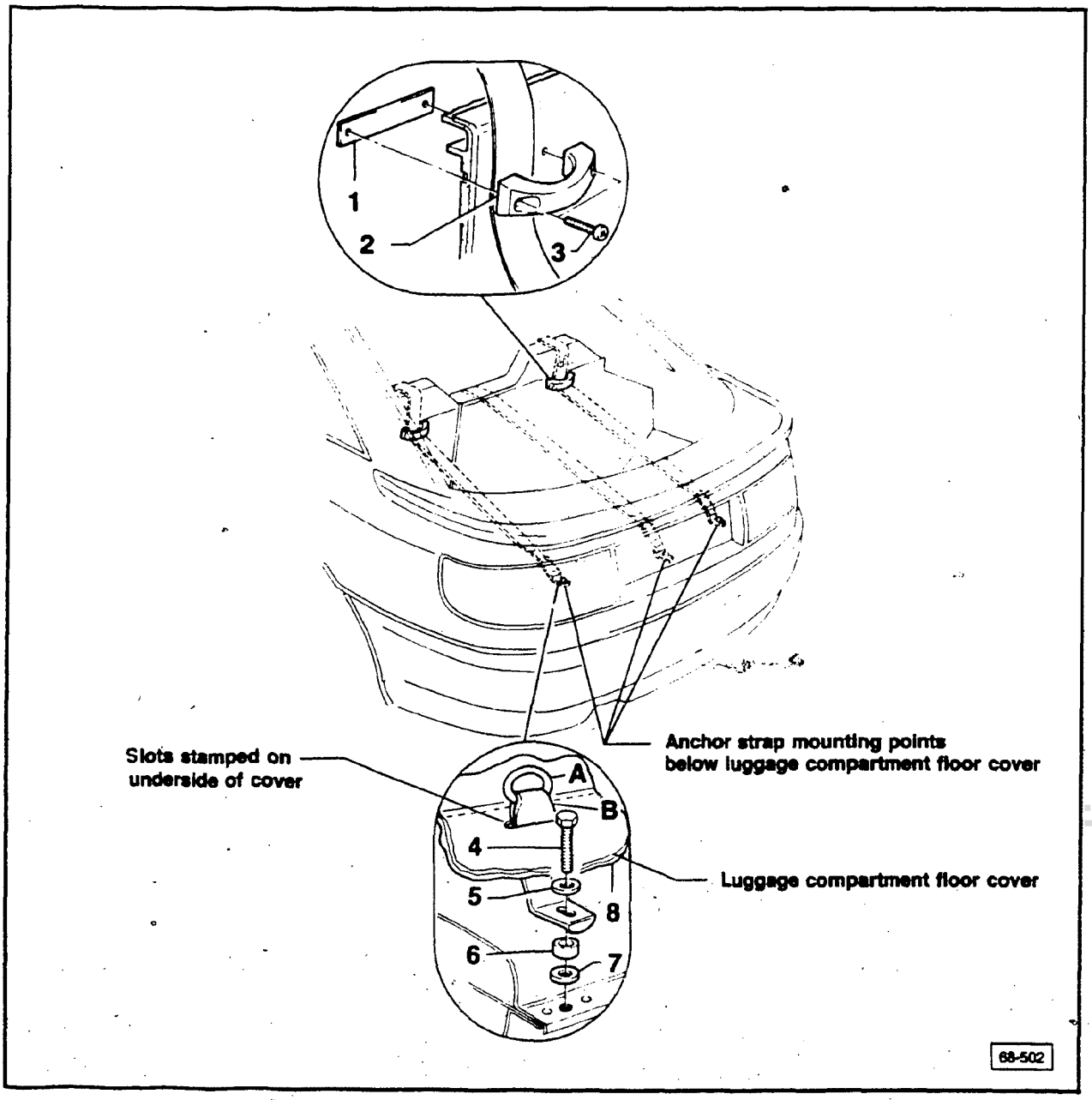

1 — **Reinforcement plate**
- only used with the outer (left/right) anchor points
- installing, see next page

2 — **Belt guide**
only used with the outer (left/right) anchor points, and in conjunction with reinforcement 1

3 — **Screw — 6 Nm (53 in. lb)**

4 — **Bolt — 25 Nm (18 ft lb)**

5 — **Washer**

6 — **Spacer sleeve**

7 — **Washer**

8 — **Luggage compartment floor**
- slots for anchoring eyes **A** on anchor strap **B** must be cut out
- mount anchoring strap as shown (bottom inset)

cardiagn.com

Child restraint anchorage, installing

Note

Installation of outer (left/right) anchor point is described. Center point does not require reinforcement plate, removal of seatback lock or partial removal of seatback cover.

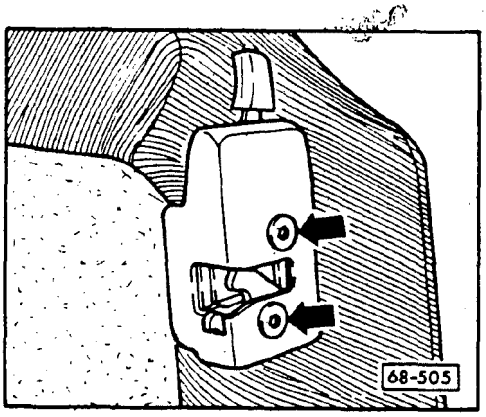

- remove bolts (**arrows**), take off rear seatback lock
  - 9 ± 2 Nm (80 ± 18 in. lb)

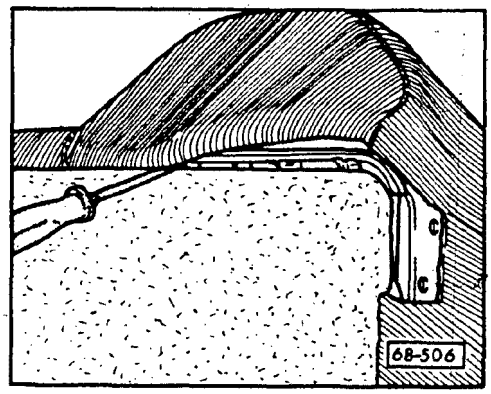

- carefully pry off seatback cover, as shown

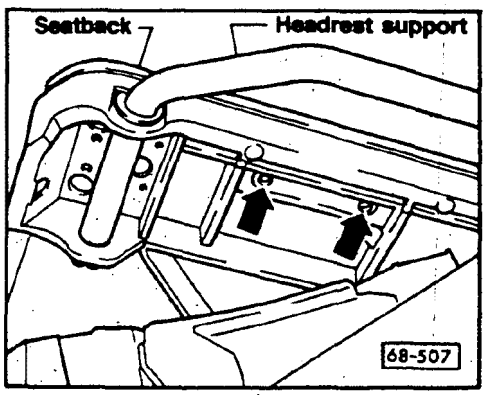

- using a 6.0 mm (15/64 in.) drill, drill through holes (**arrows**) stamped in seatback below headrest support
- install reinforcement plate **1**, and secure with belt guide **2**
- locate, by feel, slots stamped into underside of luggage compartment floor cover
- using utility knife, cut out slots for anchor belt(s) as necessary
- mount anchor strap as shown (lower inset, opposite page)

cardiagn.com

Index

A-pillar trim
- removing/installing 70.7

Armrest control unit
- removing/installing 70.4

B-pillar trim
- removing/installing 70.8

C-pillar trim
- removing/installing 70.9

Center console
- removing/installing 70.11

Door sill trim
- removing/installing 70.7
- retaining clips 70.8

Door trim, front
- assembly 70.2
- cloth separating, repair 70.4a
- removing/installing 70.3

Door trim, rear
- assembly 70.5
- cloth separating, repair 70.4a
- removing/installing 70.6

Filler panel, rear
- removing/installing 70.9

Glove compartment
- removing/installing 70.16

Headliner with sunroof
- installing 70.22
- removing 70.20

Headliner without sunroof
- installing 70.18
- removing 70.16

Instrument panel
- removing/installing 70.12

Instrument panel, center section
- removing/installing 70.15

Parking brake trim
- assembly 70.10
- removing/installing 70.11

Coupe

A-pillar trim
- removing/installing 70.27

B-pillar trim
- assembly 70.28

C-pillar trim
- removing/installing 70.29

Door sill trim
- removing/installing 70.27
- retaining clip, installing 70.27

Center console
- installing 70.36
- removing 70.35

Front door trim panel
- assembly 70.24
- locking button, installation 70.25
- panel height, adjustment 70.25
- pull rod, assembly 70.25
- retaining hooks, location 70.25

Headliner
- installing 70.42
- removing 70.40

Instrument panel
- center section, removing/installing 70.39
- installing 70.38
- removing 70.36

Parking brake trim
- assembly 70.34
- removing/installing 70.35

Rear apron trim
- assembly 70.32

Rear lid trim
- assembly 70.33

Rear side trim panel
- removing/installing 70.26
- retaining hooks, location 70.26

Retractor belt trim bracket
- assembly 70.30

Roof frame trim
- rear, assembly 70.31

cardiagn.com

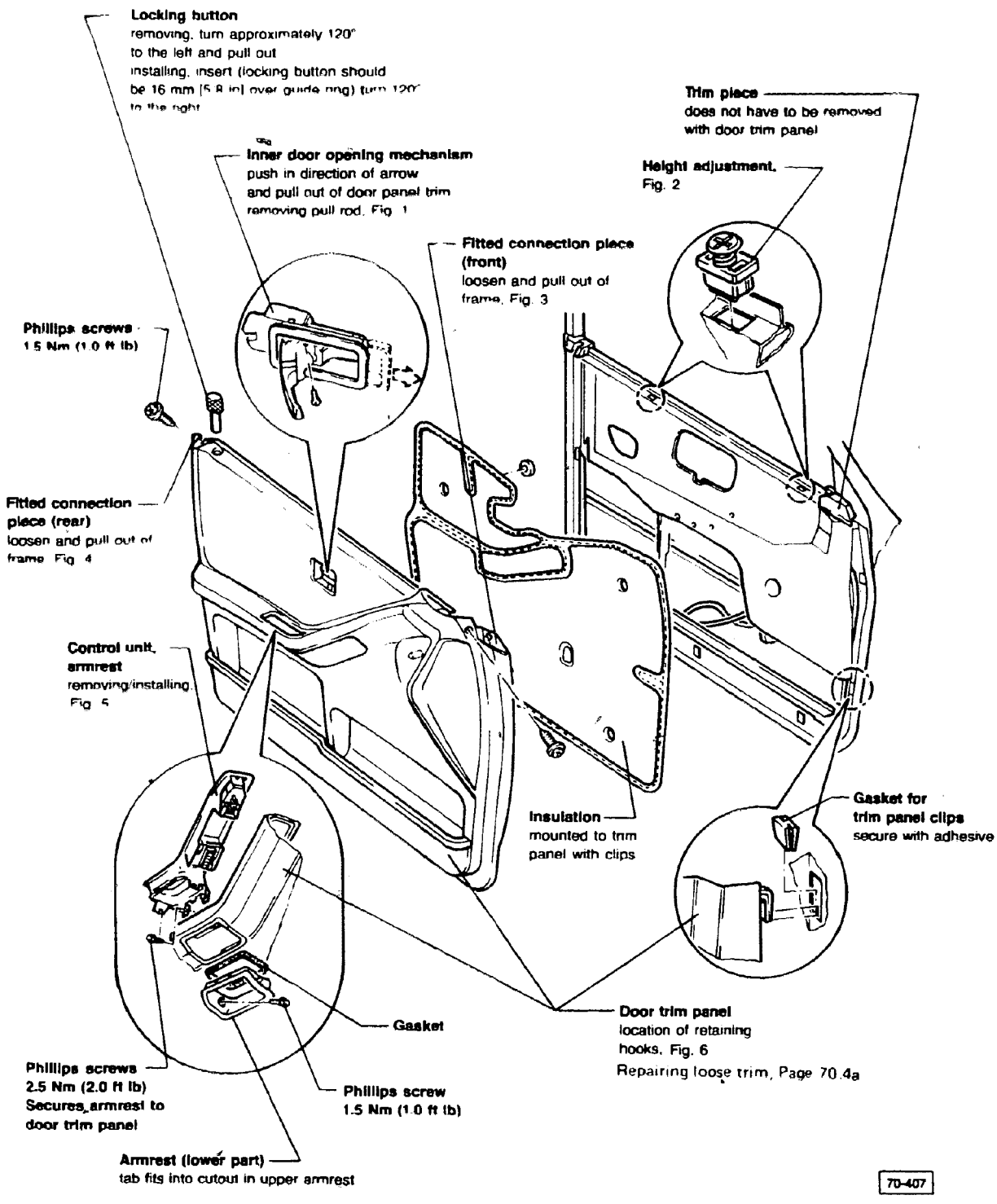

cardiagn.com

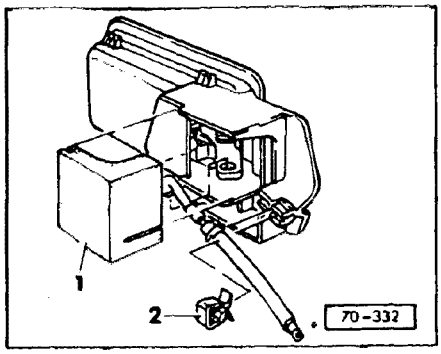

Fig. 1 Pull rod

Seal 1
Clip 2

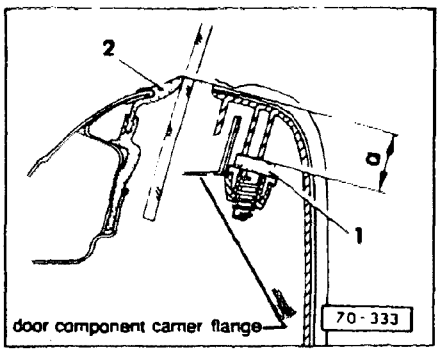

Fig. 2 Front door trim panel, height adjustment

Adjust trim panel to same height as outer window slot molding **2**

- mount door trim panel into position
- check dimension:
  a = 21.0 mm (13/16 in)
- adjust door trim panel, if necessary, with screw **1** to achieve dimension a

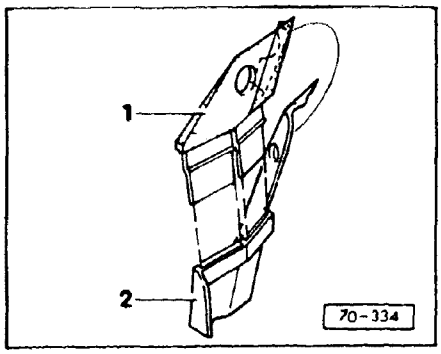

Fig. 3 Connecting piece, front

- Glued to door shell

Connecting piece **1**
Door panel **2**

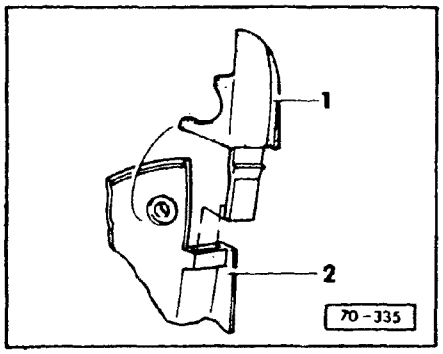

Fig. 4 Connecting piece, rear

Connecting piece **1**
Door panel **2**

cardiagn.com

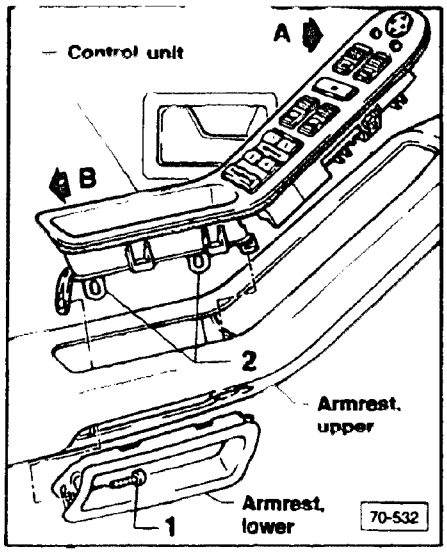

Armrest control unit, removing

Fig. 5

- remove Phillips screw **1** and take off lower armrest
- remove Phillips screws **2** along bottom of control unit
- lift control unit at top (**arrow A**), and push slightly toward rear (**arrow B**)

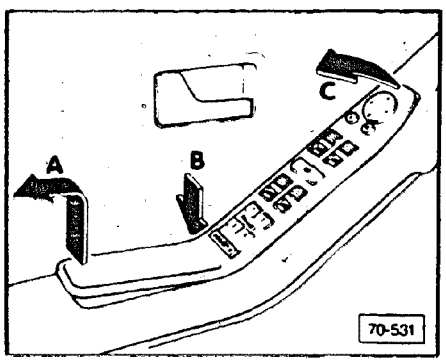

- press control unit downward at **B**, and carefully pry out of armrest at **C**
  - control unit must be first removed at point **C** to prevent damage to armrest
  - use cloth tape covered plastic wedge to pry out
- remove control unit in direction of arrow **A**
- unplug all electrical connectors from control unit

Armrest control unit, installing

Install all components in reverse order of removal, noting the following:

- reinstall Phillips screw **1**
  - 1.5 Nm (1.0 ft lb)
- reinstall Phillips screws **2** at bottom of control unit
  - 2.5 Nm (2.0 ft lb)

cardiagn.com

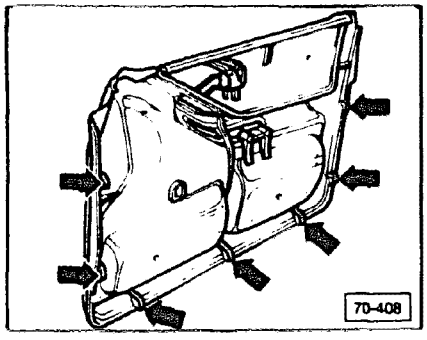

▶ Fig. 6 Retaining hooks, locations

Door panel trim, cloth separating

Loose cloth trim may be repaired as follows:

- slightly pull back loose cloth from door panel trim
- apply adhesive **D 000 801** (with 10% hardened **D 000 802**) or equivalent to **both** cloth and trim panel
- allow to air dry approximately 10 minutes
- position cloth trim, and press to door trim panel
- smooth out using plastic spatula or similar tool
- allow to fully harden
  - approximately 30 minutes

CAUTION

Part numbers are listed for reference only. Always consult with the Parts Department for latest information.

cardiagn.com

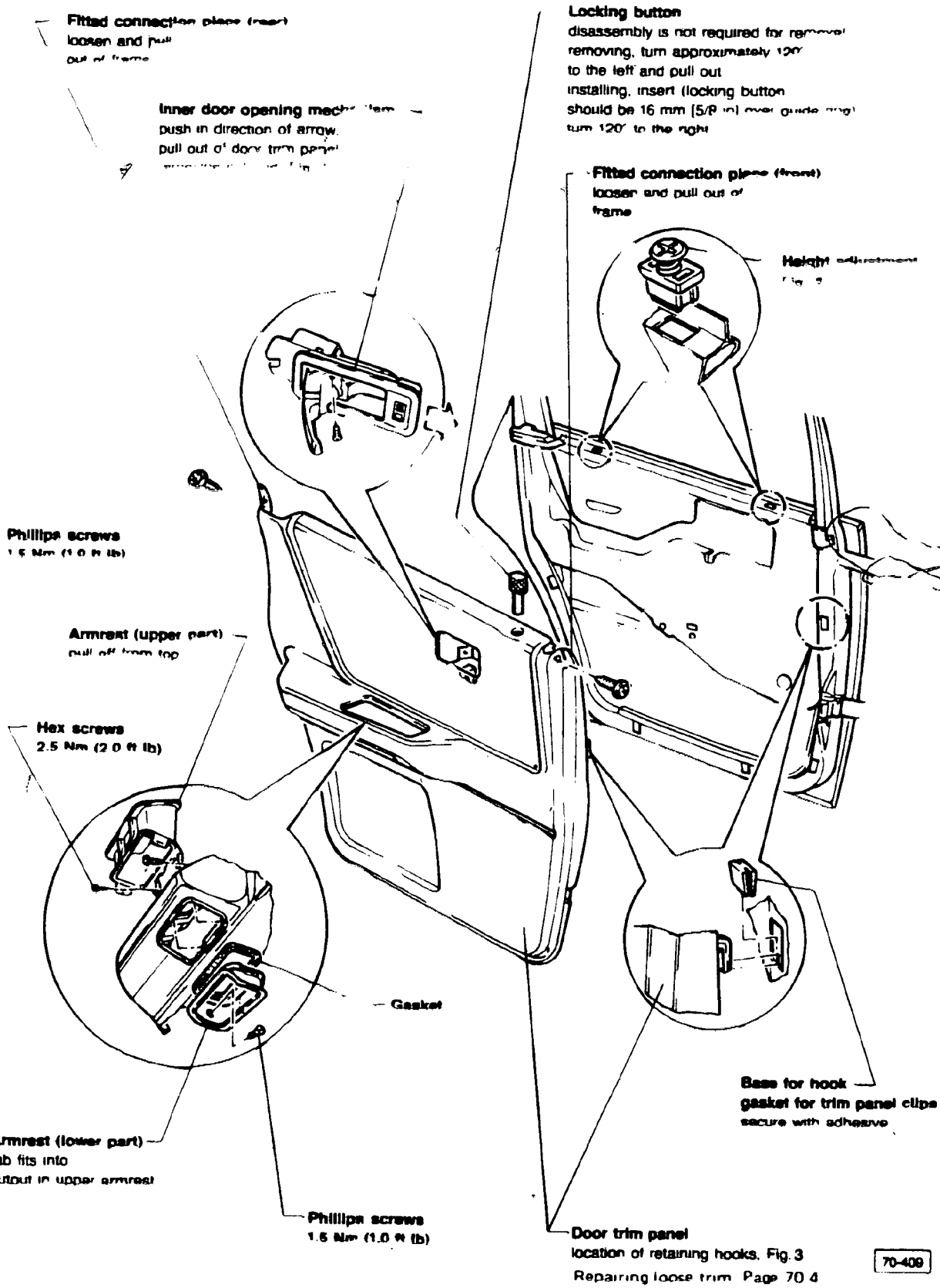

cardiagn.com

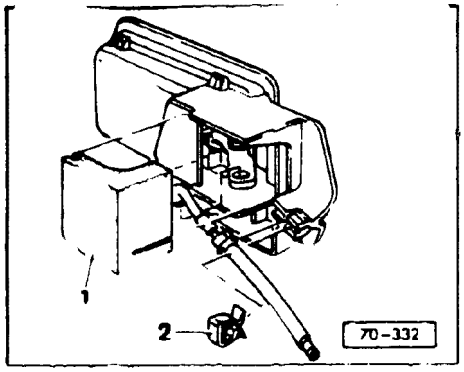

▶ Fig 1 **Pull rod**

1 = Seal
2 = Clip

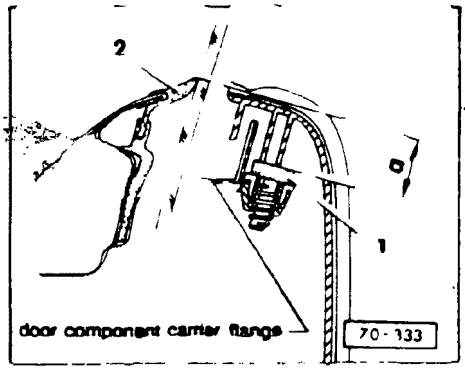

▶ Fig 2 **Rear door trim panel, height adjustment**

Adjust trim panel to same height as outer window slot molding 2

- mount door trim panel into position
- check dimension:
  - a = 21 mm (13/16 in)
- adjust door trim panel, if necessary with screw 1 to achieve dimension a

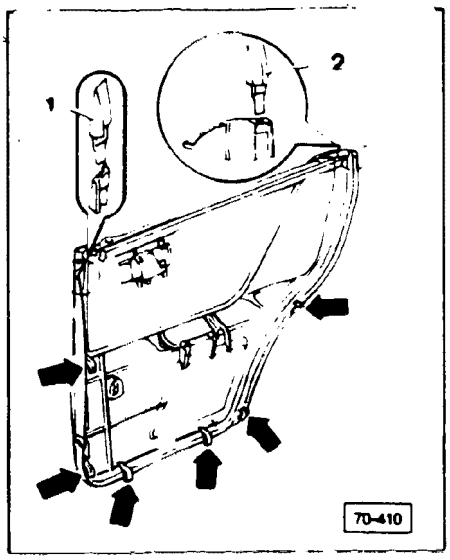

▶ Fig 3 **Retaining hooks, location**

1 = Adapter, front
2 = Adapter, rear

cardiagn.com

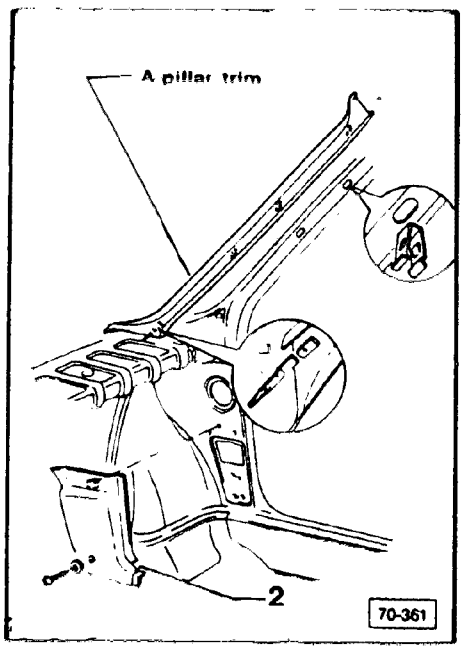

A-pillar trim, removing/installing

Removing

- pull trim out of clips at top
- pull trim upwards and take out
- remove screw, and take off trim 2
  - note clip at top

Installing

Install in reverse order of removal

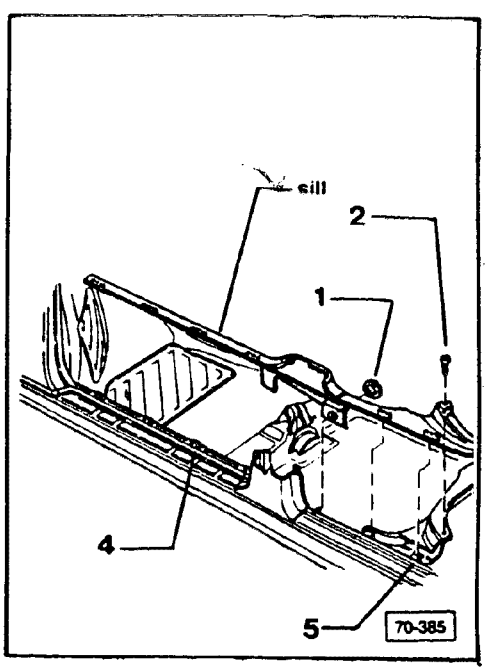

Door sill trim, removing/installing

Removing

- remove left or right front seat
- remove rear bench seat
- unscrew clip 1 with fuse removal tool
- remove Phillips screw 2
- remove sill trim upwards and out of retaining clips 4, 5

Installing

Install in reverse order of removal

cardiagn.com

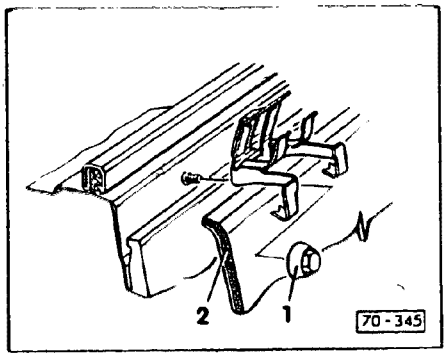

Front door sill retaining clip, installing

- secure to body with cap nut **1**
  - carpet **2** must be positioned behind clip (as shown)

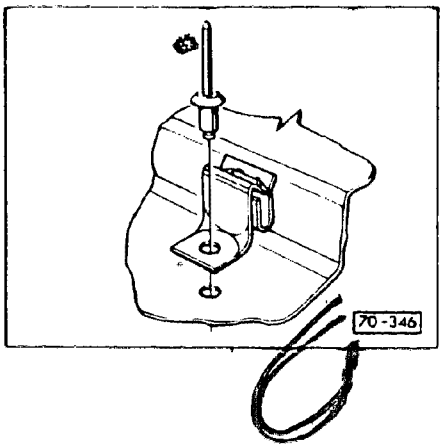

Rear door sill retaining clip, installing

- install with pop-rivet

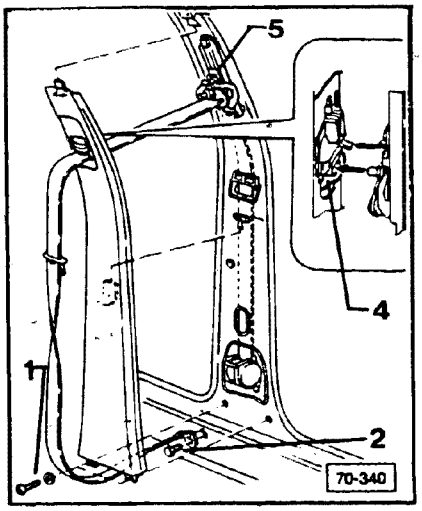

B-pillar trim, removing/installing

Removing

- remove door sill trim, see page 70.7
- remove Phillips screw **1**
- remove hex head bolt **2**
  - 50 Nm (37 ft lb)
- remove B-pillar trim by pulling downwards out of metal tabs (**arrows**)

Installing

Install in reverse order, noting following:

- set seat belt height adjuster to lowest position
- install B-pillar trim at top first
  - do not depress button **4** when installing
  - operating lever **5** fits under button **4**
- ensure belt height adjuster clicks into first position
- check seat belt height adjustment mechanism for proper function

cardiagn.com

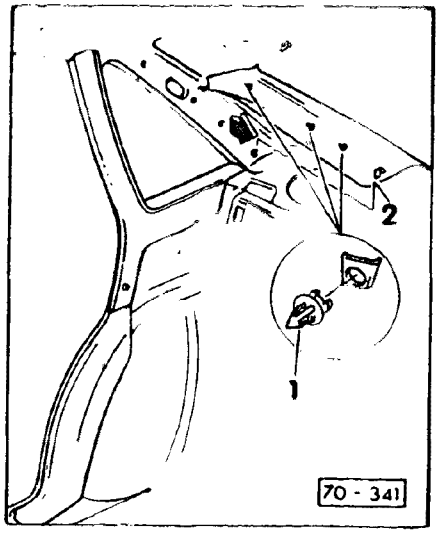

Rear filler panel, removing/installing

Removing

- remove rear seat bench and seat back (see Repair Group 72)
- unclip D-pillar trim, pull off in upwards direction
  1 = clip
  2 = hook

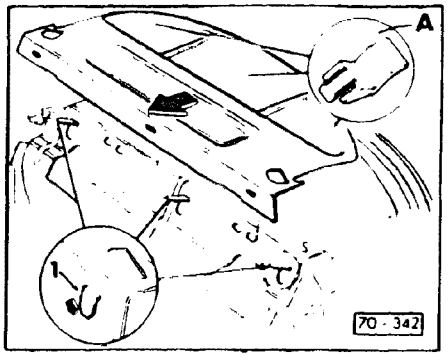

- remove outer seat belt mounting bolts
  - 50 Nm (37 ft lb)
- bend open metal tabs **1**
- remove panel out toward front

Installing

Install in reverse order, note the following:
- press panel downward at location of three clips (insert **A**)

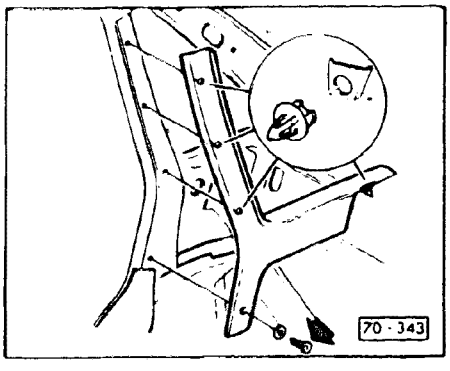

C-pillar trim, removing/installing

Removing

- remove rear seat bench and seat back (see Repair Group 72)
- remove rear panel
- remove Phillips screw (arrow)
- remove trim from C-pillar
- pry out trim together with rear clip

Installing

Install in reverse order of removal.

cardiagn.com

THIS FRAME INTENTIONALLY LEFT

BLANK

cardiagn.com

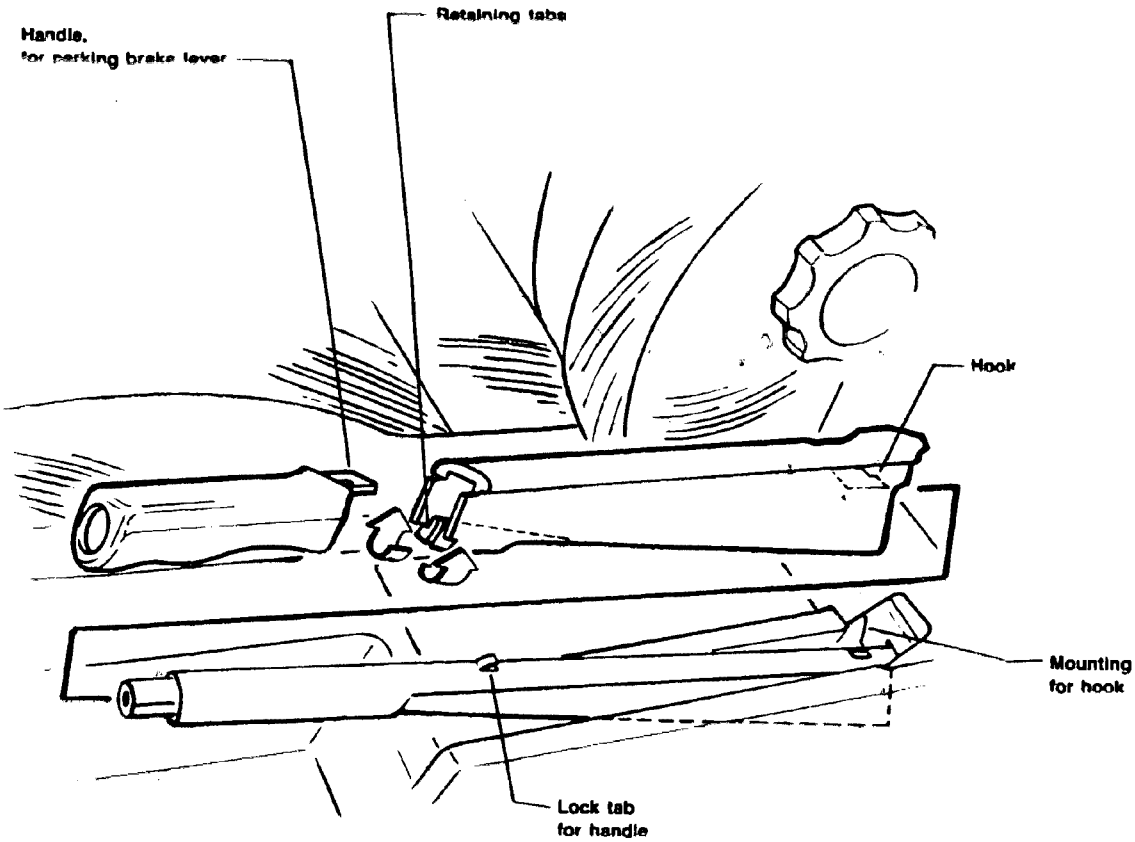

70-378

cardiagn.com

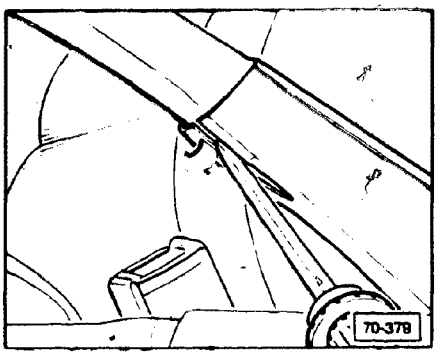

Parking brake lever trim, removing/installing

Removing

- pull up hand brake lever
- pry off retaining tabs (**arrow**), pull handle forward

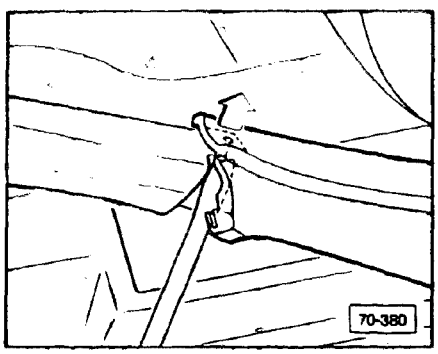

- remove handle by lifting off lock tab
- pull rear trim forward (**arrow**)

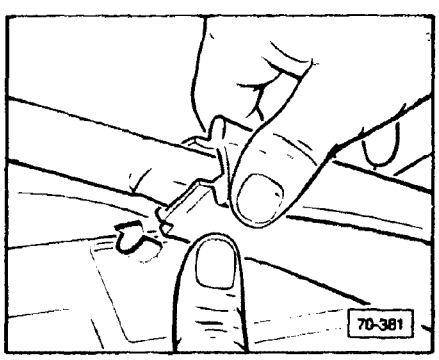

Installing

Install in reverse order of removal, note the following:

- press trim downward in rear to engage hook
- insert retaining tabs into hand brake lever (as shown)
- insert handle

Center console removing/installing

Removing

- disconnect battery ground strap
- remove ashtray
- unclip trim plate, remove screws
- lift center console upwards and forward off handbrake lever

cardiagn.com

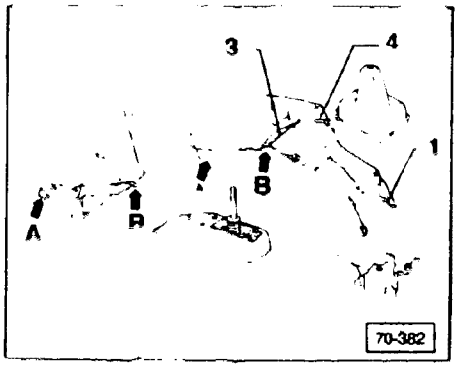

- unscrew shift lever knob
- remove bolt **1**
- pull trim **3** away, unscrew hex head screws **4**
- pull out center console toward rear from guides **A** and **B**

Installing

Install in reverse order

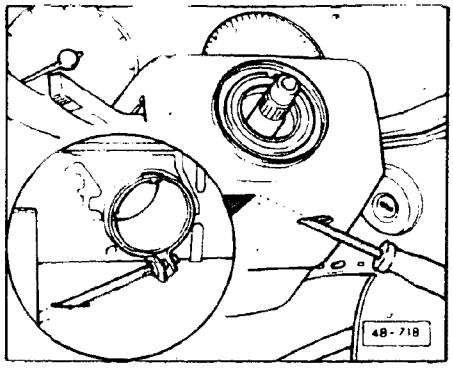

Instrument panel, removing

- remove steering wheel
- insert screwdriver (as shown), loosen securing clamp for switch
- remove switch

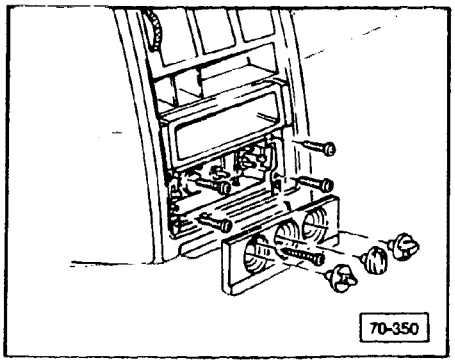

- remove instrument cluster
- pull off three knobs for ventilation controls
- unscrew and remove trim panel
  - screws located behind left and right knobs
- remove housing screws
- unscrew control unit
- disconnect multi-pin connectors

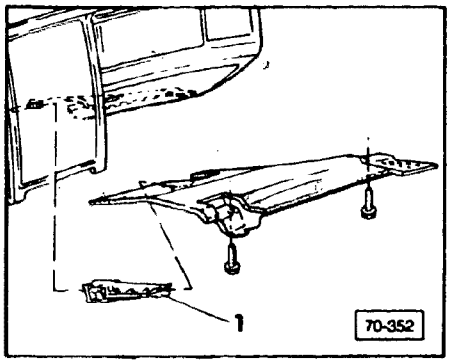

- remove cover on front passenger's side and pull out of bracket **1**

cardiagn.com

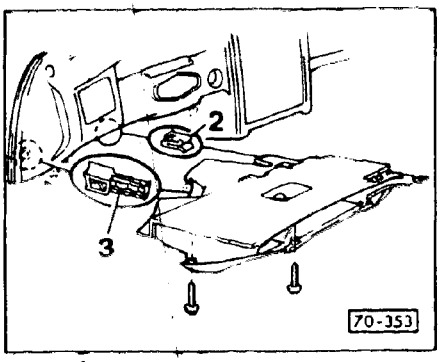

- remove shelf on driver's side
- pull shelf off retaining clip 2 and bracket 3

Note

The wiring harnesses in the instrument panel are routed in cable ducts.

- disconnect terminal connection or pull off multi-pin connector

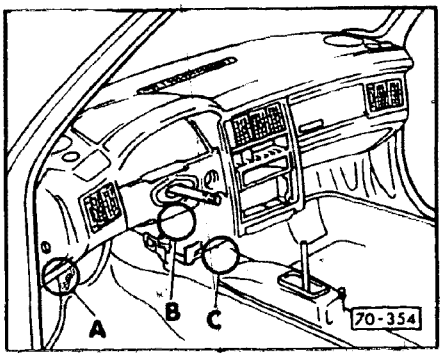

A — remove wiring harness from relay carrier and relay plate with fuse box
- ground wire

B — wiring harness outlet from instrument panel located here

C — terminal connections from tunnel located here. Detach connection from welded stud on cross member

Note

Switches need not be disconnected

cardiagn.com

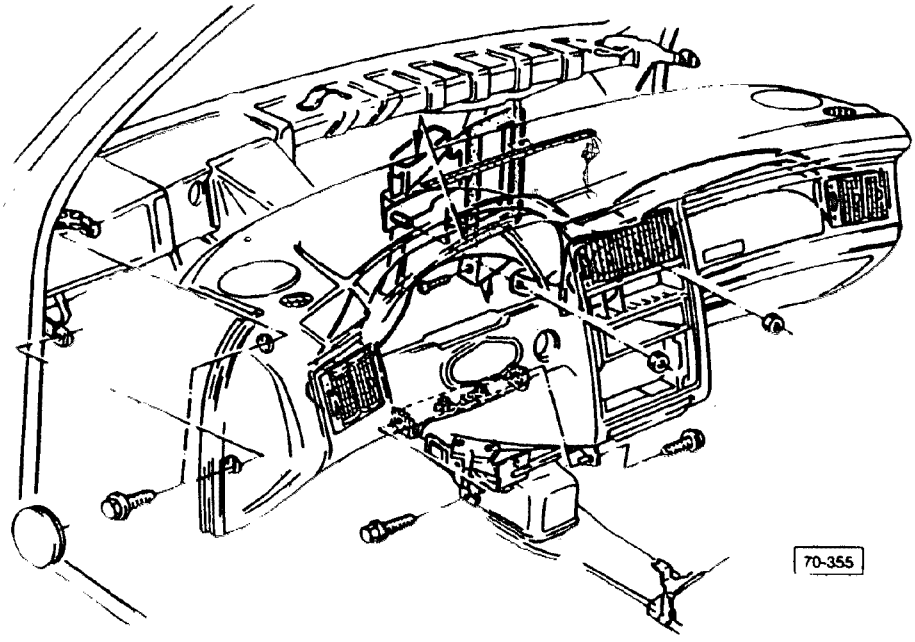

- remove cover caps and take off screws
- remove nuts from heater housing
- remove Phillips screw from defroster duct
- push-up defroster vent duct connector slightly, and carefully pull away from instrument panel

Instrument panel, installing

Installing

Install in reverse order, note the following:

- push hose from defroster duct up and into blower nozzles
  - ensure secure fit
- keeping side and bottom mounting screws loose, adjust gap between instrument panel and windshield to approximately 7.0 mm (9/32 in)
- close both front doors
- ensure retaining tabs of trim panel fit behind edge of housing
- adjust instrument panel to same height as door trim panels
- tighten instrument panel mounting screws
  - 5 Nm (3.7 ft lb)
- reinstall steering wheel
  - 40 Nm (30 ft lb)

cardiagn.com

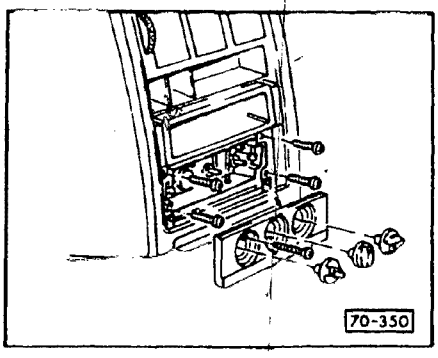

Instrument panel center section, removing/installing

Removing

- remove center console, see 70.11
- pull off three control knobs for ventilation controls
- unscrew and remove trim panel
- remove radio

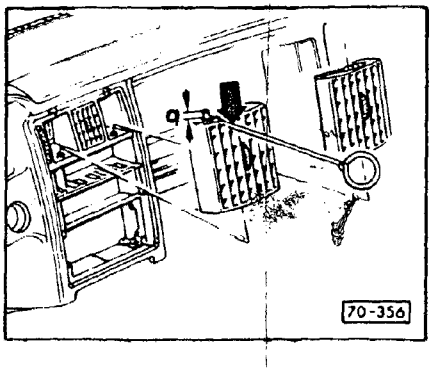

- pull out swivel fittings on left and right with bent wire
  - a = 3-4 mm (1/8-5/32 in)
- insert tool at the top to the right or left of the center section and behind the swivel fitting housing edge

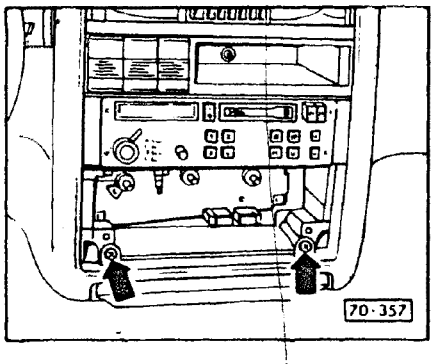

- remove Phillips screws and press ashtray down slightly

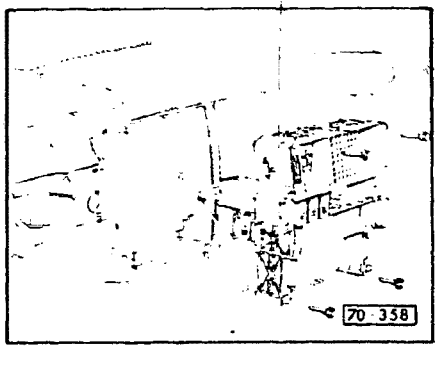

- unscrew center section and remove
- detach connector from switch or radio

Installing

Install in reverse order.

cardiagn.com

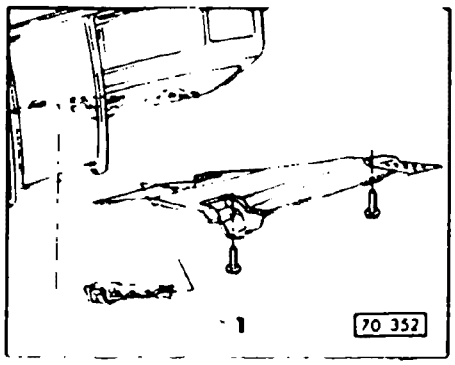

Glove compartment, removing/installing

Removing

- remove cover on front passenger's side and pull out bracket 1

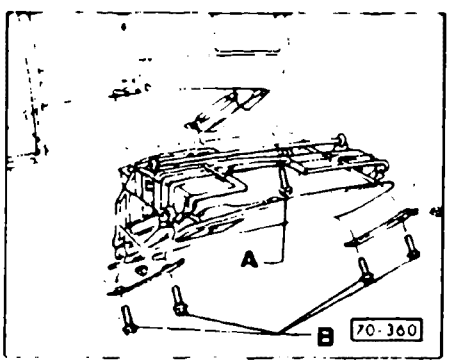

- remove screws **B**
  - note screw **A** behind lock hook
- press glove compartment toward center of vehicle, and remove downward

Installing

Install in reverse order

CAUTION

Before starting work, disconnect battery ground strap

CAUTION

Read all warning labels and cautions before proceeding with repairs

Tools required

- wallpaper roller
- toothed trowel
- utility knife with trapezoidal blade
- hot air blower

Materials required

- adhesive **AKL 407 000 05**

Headliner, vehicles without sunroof

Note

The bonded headliner cannot be removed without being destroyed.
Remove the headliner by pulling it from the roof lengthwise in 100 mm (4 in) wide strips. This ensures that the roof panel is not deformed during the removal process.

If you have to repair the roof panel, pull the headliner away in the damaged area first. After repairs, remove the remaining headliner.

cardiagn.com

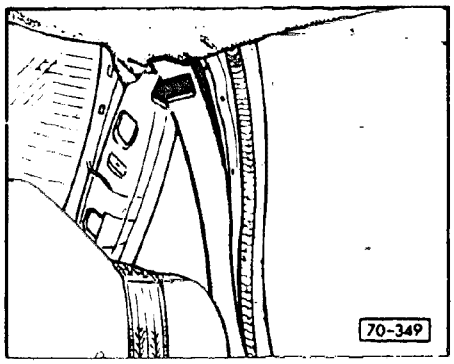

Removing

- remove trim panels from A, B-pillars (see Repair Group 70)
- pull out C-pillar trim from top only, see page 70.9
- remove beading between windshield and headliner
- remove beading between rear window and headliner

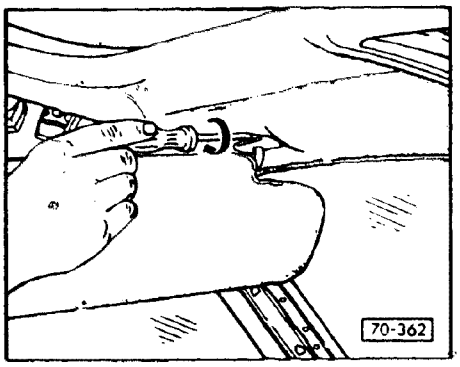

- pry out caps for both sunvisor brackets with screwdriver
- remove sunvisors and brackets
- remove interior light

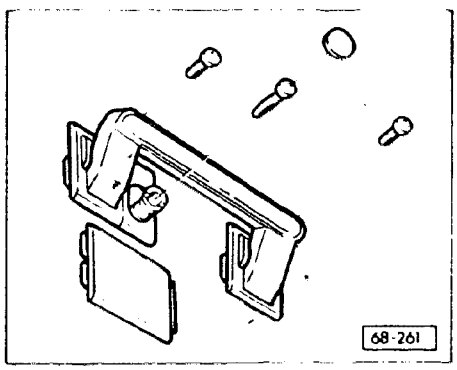

- remove assist handles

cardiagn.com

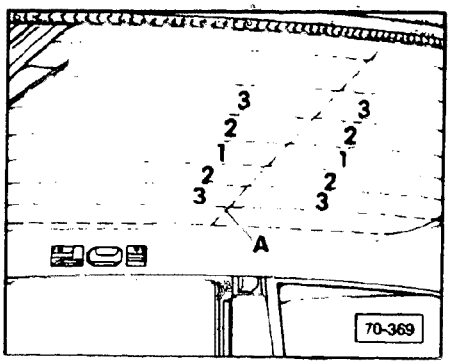

- using utility knife, cut across roof at point A
- cut headlining into 100 mm (4.0 in) wide strips
- support roof with one hand
- starting at center, start pulling off headliner in sequence (as shown)

Note

The scraps of paper remaining after pulling off the headlining can be easily removed with the aid of a hot air gun. Small scraps need not be removed.

CAUTION

If paintwork on the inside of the roof has been damaged when removing the headlining, the damaged areas must be primed.

CAUTION

When using hot air blower, **do not** heat roof to over 100°C (212°F), otherwise paint will be damaged.

Before starting installation of new headliner, note the following:

- install headliner at room temperature of at least 20°C (68°F)
- if necessary, warmup adhesive cartridge in hot water
- adhesive is applied to thickness of 2-3 mm (1/8 in)
- shorten tip of adhesive cartridge to half length and cut off at angle

Headliner, vehicles without sunroof

Installing

- fold down front passenger seat backrest
- guide replacement headlining in through open passenger door
- apply adhesive material to headlining in parallel runs with toothed trowel

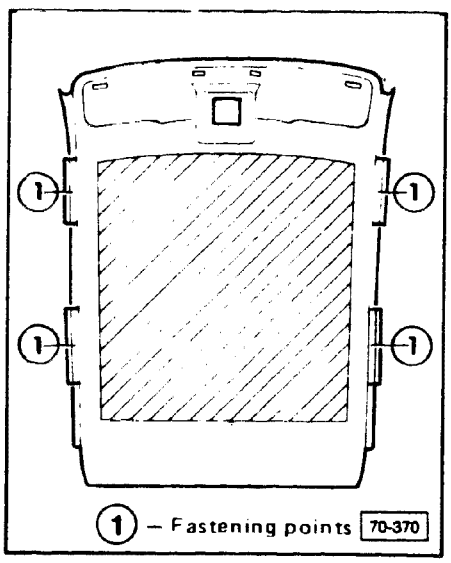

- allow approximately 30 minutes before installing headliner to roof
  - if installation is delayed, adhesive must be scraped off and reapplied later
- remove excess adhesive immediately with water
  - remove partially dried adhesive with 3M® General Purpose Adhesive Cleaner or equivalent
  - fully hardened adhesive **cannot** be removed
- immediately before bonding headlining, heat adhesive from distance of 200-300 mm (8-12 in) to approximately 60°C (140°F)

cardiagn.com

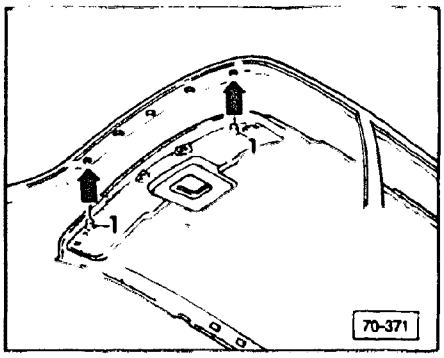

- guide headlining first on top over C-pillar trims
- fasten headlining into front with centers in roof frame
- fasten headlining in front lightly with sunvisor brackets 1

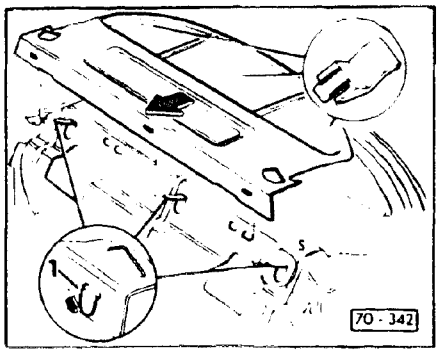

- press headlining from front to rear
- press into side retaining flange 1, above doors in the retaining channel
- roll headlining down to roof with wallpaper roller
  - start at center and work outward
- reinstall all interior parts
- reconnect battery ground strap

cardiagn.com

CAUTION

Before starting work, disconnect battery ground strap

CAUTION

Read all warning labels and cautions before proceeding with repairs

Tools required

- wallpaper roller
- toothed trowel
- utility knife with trapezoidal blade
- hot air blower

Materials required

- adhesive **AKL 407 000 05**

Headliner, vehicles with sunroof

Note

The bonded headliner cannot be removed without being destroyed.
Since the strength of the roof of vehicles with sunroof is reinforced with the water tray, the headlining does not need to be cut into strips

Removing

- remove sunroof completely (see Repair Group 60)
- remove beading between windshield and headliner
- remove beading between rear window and headliner

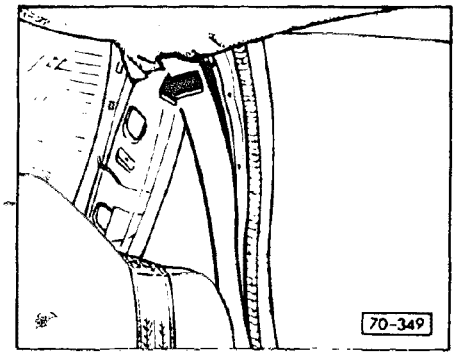

- pull out C-pillar trim from top only, see page 70. 9

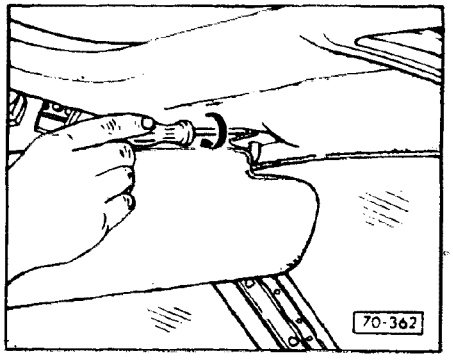

- pry out caps for both sunvisor brackets with screwdriver
- remove sunvisors and brackets

cardiagn.com

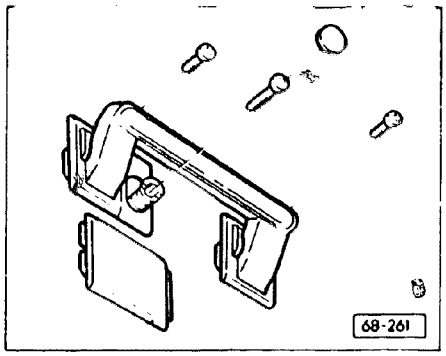

- remove assist handles

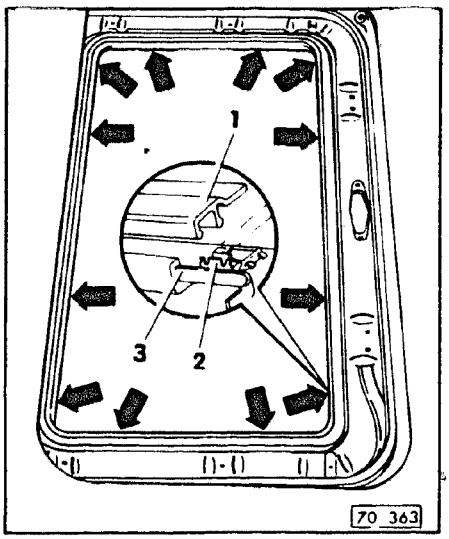

- remove cover frame **1** for sunroof cutout from the top of clips **2** (**arrows**)
  - note reinforcement in headlining **3**
- pull headlining up to sunroof cutout

Note

Headlining is glued **only** in area of water tray.

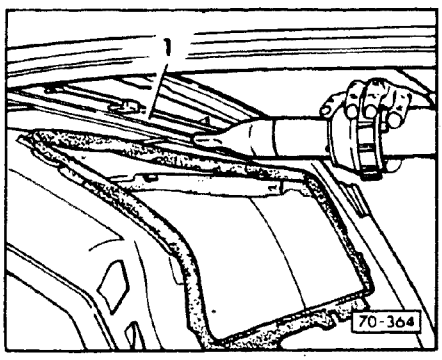

- heat adhesive area between water tray **1** and headlining with hot air blower
- carefully pull headlining downward from water tray

Note

The scraps of paper remaining after pulling off the headlining can be easily removed with the aid of a hot air gun. Small scraps need not be removed.

CAUTION

If paintwork on the inside of the roof has been damaged when removing the headlining, the damaged areas must be primed.

CAUTION

When using hot air blower, **do not** heat roof to over 100°C (212°F), otherwise paint will be damaged.

cardiagn.com

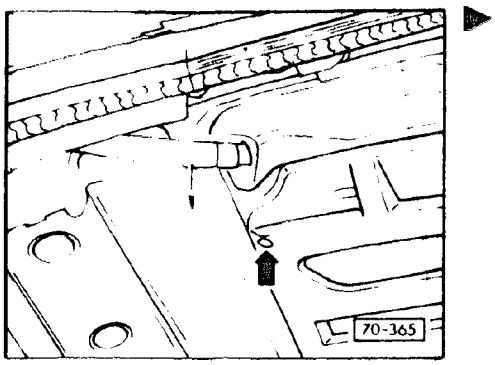

- check that clear seals (**arrow**) left/right are installed on water tray
  - if missing use cloth or duct tape
  - 1 – water drain hose

Before starting installation of new headliner, note the following:

- install headliner at room temperature of at least 20°C (68°F)
- if necessary, warmup adhesive cartridge in hot water
- adhesive is applied to thickness of 2-3 mm (1/8 in)
- shorten tip of adhesive cartridge to half length and cut off at angle

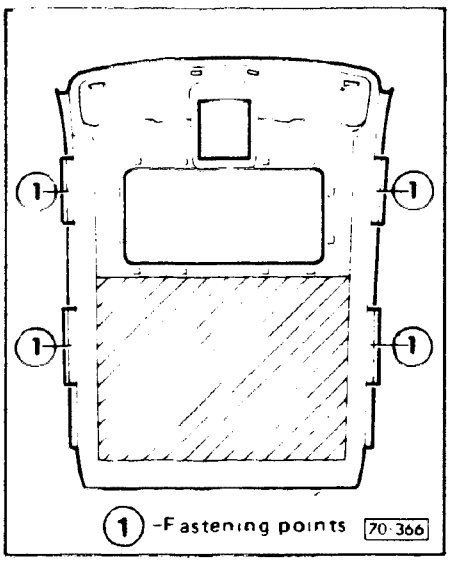

Headliner, vehicles with sunroof

Installing

- fold down front passenger seat backrest
- guide replacement headlining in through passenger door
- apply adhesive material to headlining in parallel runs with toothed trowel
- allow approximately 30 minutes before installing headliner to roof
  - if installation is delayed, adhesive must be scraped off and reapplied later
- remove excess adhesive immediately with water
  - remove partially dried adhesive with 3M® General Purpose Adhesive Cleaner or equivalent
  - fully hardened adhesive **cannot** be removed
- immediately before bonding headlining, heat adhesive from distance of 200-300 mm (8-12 in) to approximately 60°C (140°F)
- guide headlining first on top over both C-pillar trim panels
- fasten headlining in front lightly with sunvisor brackets
- position headlining toward sunroof cutout, and press on completely

cardiagn.com

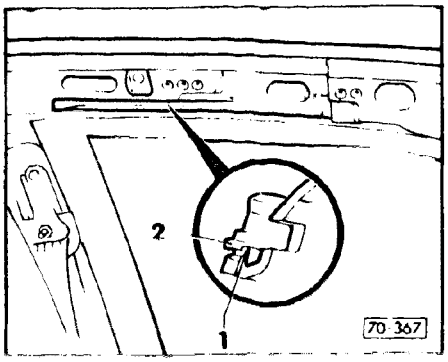

- press in retaining flange **1** lateral above doors, into the retaining channel **2**
- insert cover frame in sunroof cutout
- roll the headlining onto the roof with a wallpaper roller — beginning in the center of the roof or water tray
- mount interior equipment
- reconnect battery groundstrap

cardiagn.com

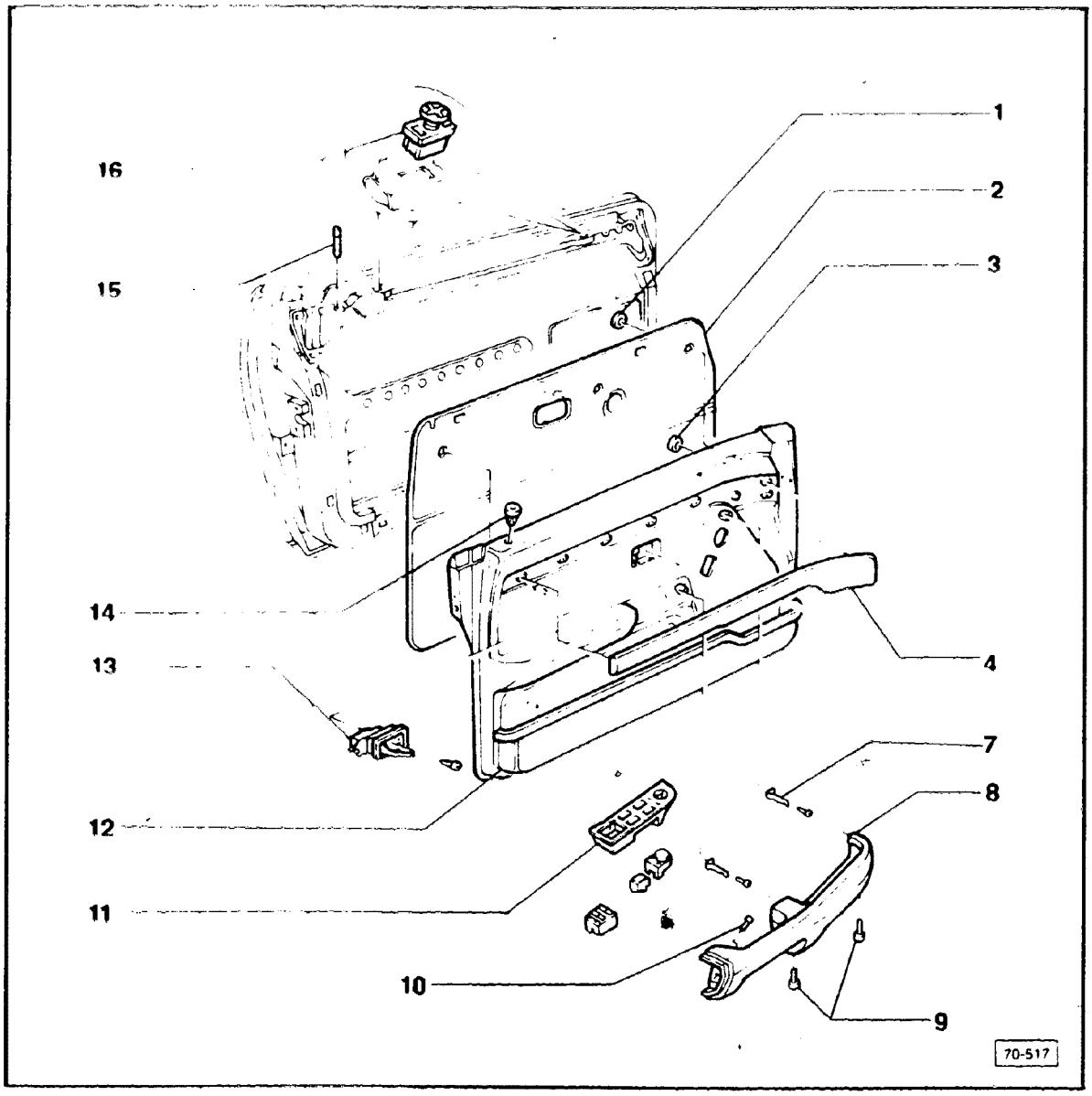

1 — **Lock washer**

2 — **Insulation**
mounted to trim panel with clips
do not reuse if damaged

3 — **Lock washer**

4 — **Door trim panel**
mounted to door with clips

7 — **Bracket, armrest**
secured by screw,
2.5 Nm (32 in. lb)

8 — **Armrest**

9 — **Pan head tapping screw**
2.5 Nm (32 in. lb), inner hex
4.0 mm (5/32 in.)

10 — **Phillips head screw**
2.5 Nm (32 in. lb)

11 — **Control panel**

12 — **Door trim panel**
location of retaining hooks,
Fig. 1
push upwards to remove trim

13 — **Inner door opening mechanism**
push forward and pull out of door trim panel
unhook from pull rod. Fig. 2

14 — **Guide, locking button**

15 — **Locking button**
removing, turn approximately 180° and pull out
trim. Does not have to be disassembled to remove. Fig. 3

16 — **Height adjustment**
Fig. 4

cardiagn.com

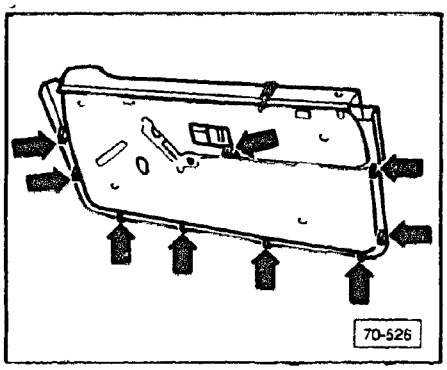

▶ **Fig. 1 Retaining hooks, location**

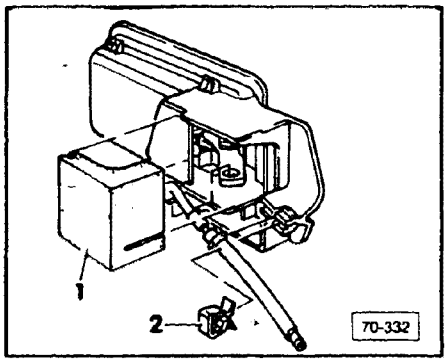

▶ **Fig. 2 Pull rod, assembly**

1 — seal
2 — clip

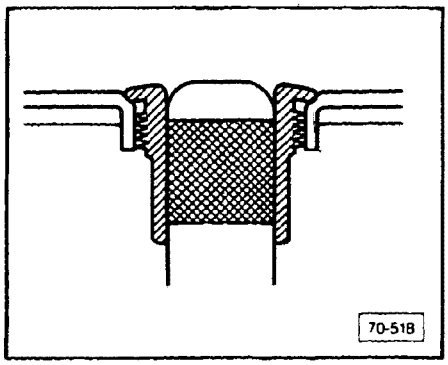

▶ **Fig. 3 Locking button, installation**

- letter **P** on button must point toward window glass
- when in locked position, button is flush with guide trim

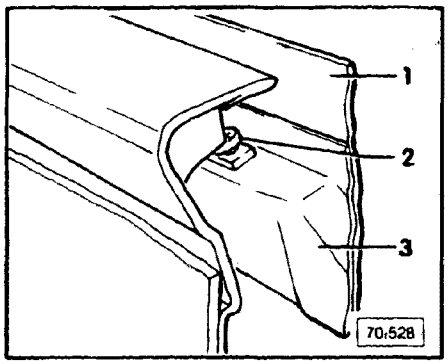

▶ **Fig. 4 Front door trim panel, height adjustment**

Adjust trim panel to same height as outer window slot molding

- adjust trim flush to front instrument panel and rear side panel trim
- adjust door trim panel, if necessary, with screw **2**

1 — window slot molding
2 — set screw
3 — window regulator

cardiagn.com

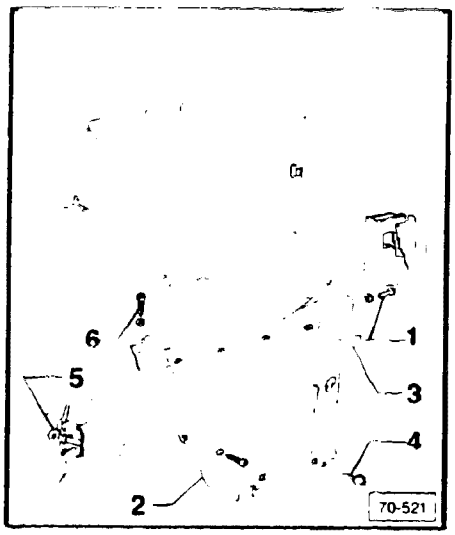

Rear side panel trim, removing

- remove rear seat bench, see Repair Group 72
- remove upholstery side, rear seatback, see Repair Group 72
- remove inner door sill trim

1 — tapping screw
2 — trim panel (retaining hook location, Fig. 1)
3 — trim (secured with lock washers, see inset 5)
4 — self tapping screw and washer
5 — lock washer for trim 3
6 — self tapping screw (also serves as mounting for belt retractor)

Rear side panel trim, installing

Reinstall all components in reverse order of removal

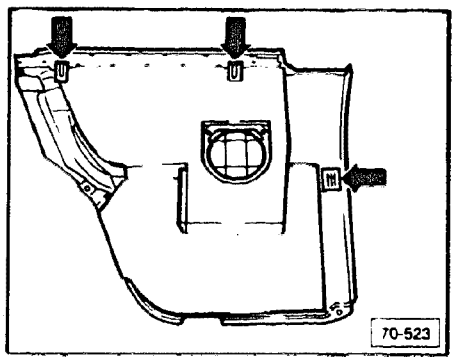

▶ **Fig. 1 Retaining hooks, location**

cardiagn.com

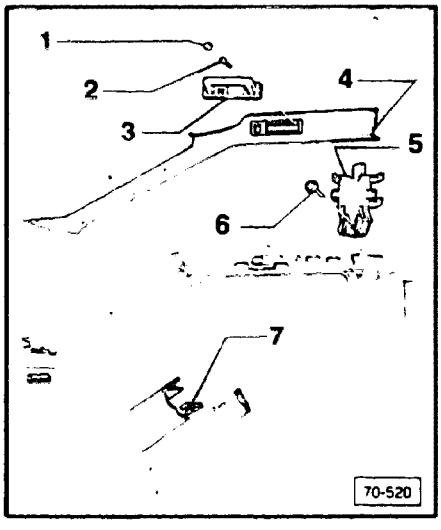

A-pillar trim, removing

- remove cap **1**, screw **2** and take off assist handle **3**
- pull out trim **4** from clips **7**, retaining plate **5**

A-pillar trim, installing

Install all components in reverse order of removal, noting the following:

- retaining clip **5** is secured in front hole with screw/washer **6**

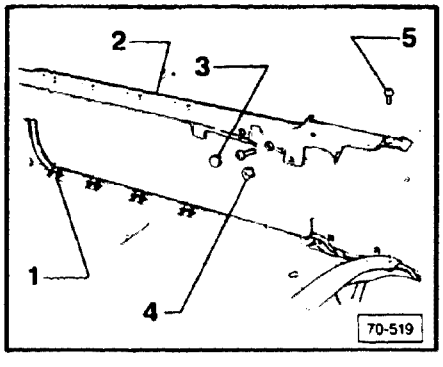

Door sill trim, removing

- remove rear bench seat, see Repair Group 72
- remove clip **4** with fuse removal tool
- remove cap **3**, Phillips screws **5**
- remove sill trim **2** upwards and out of retaining clips **1**

Door sill trim, installing

Install all components in reverse order of removal, noting the following:

- note proper installation of retaining clip **1**, see Fig. 3

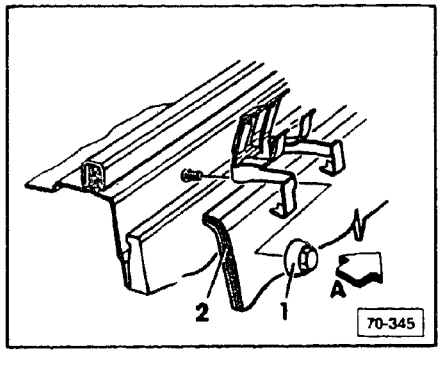

Door sill retaining clip, installing

- secure retaining clip with clip nut **1**
- install carpet trim **2** from below, **behind** retaining clip
  A is driving direction

cardiagn.com

Note:

Side panel trim must be removed. Pull off door seal at area of B pillar.

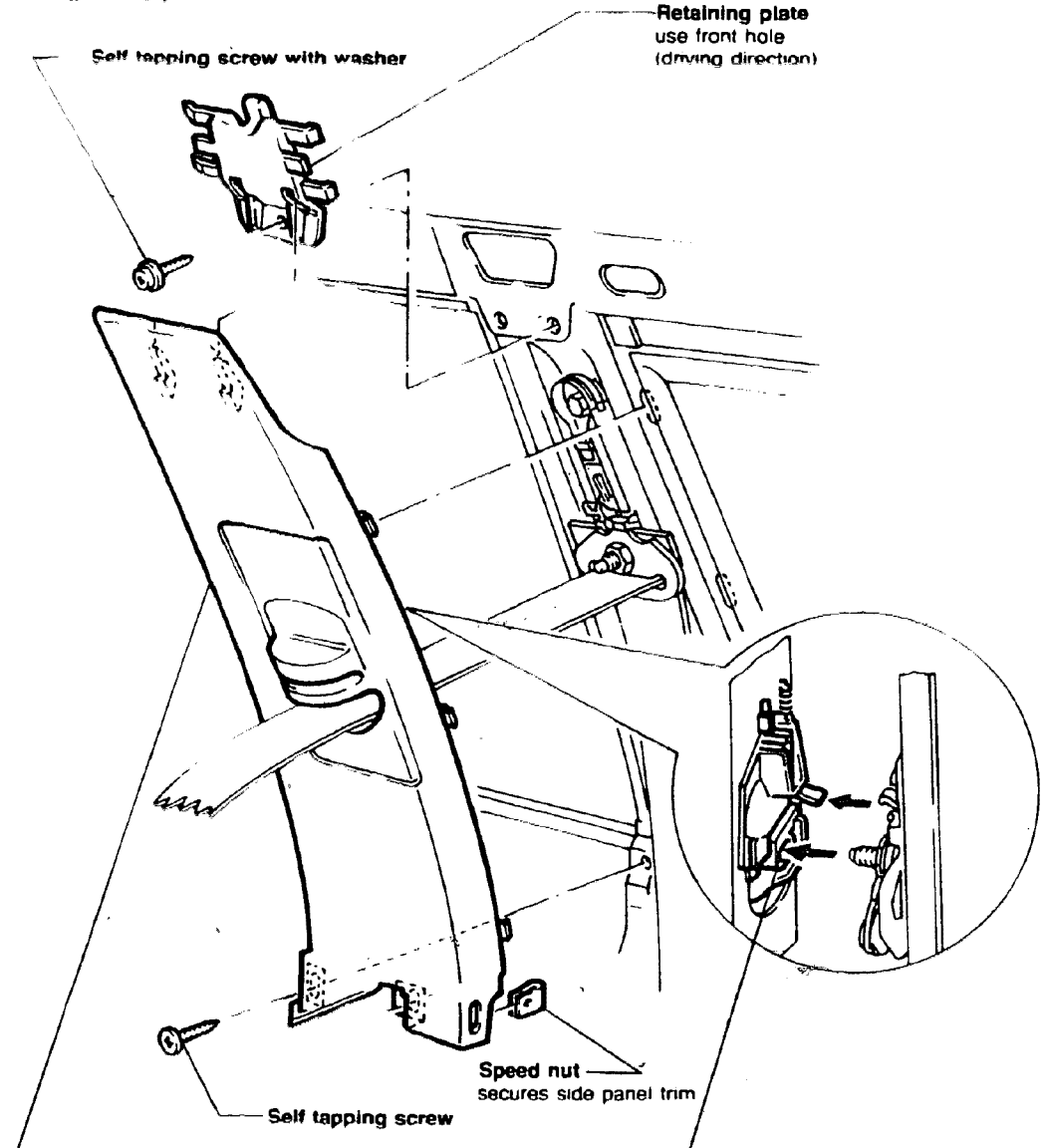

cardiagn.com

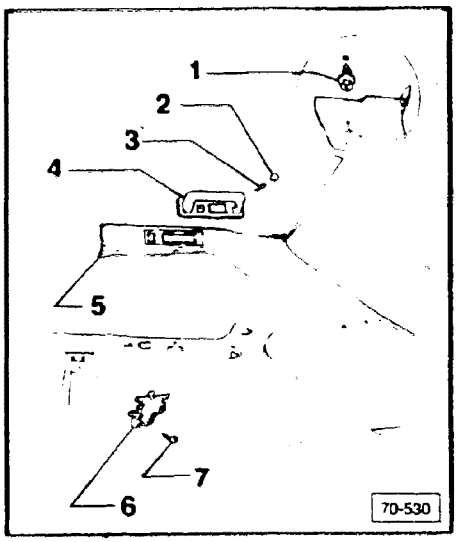

C-pillar trim, removing

- remove bracket for rear belt retractor
- remove cap **2**, screw **3**, and assist handle **4**
- unclip C-pillar **5** from C-pillar clips **1**, remove trim from retaining plate **6**

C-pillar trim, installing

Reinstall all components in reverse order, noting the following:

- screw **7** goes into front hole (driving direction)

cardiagn.com

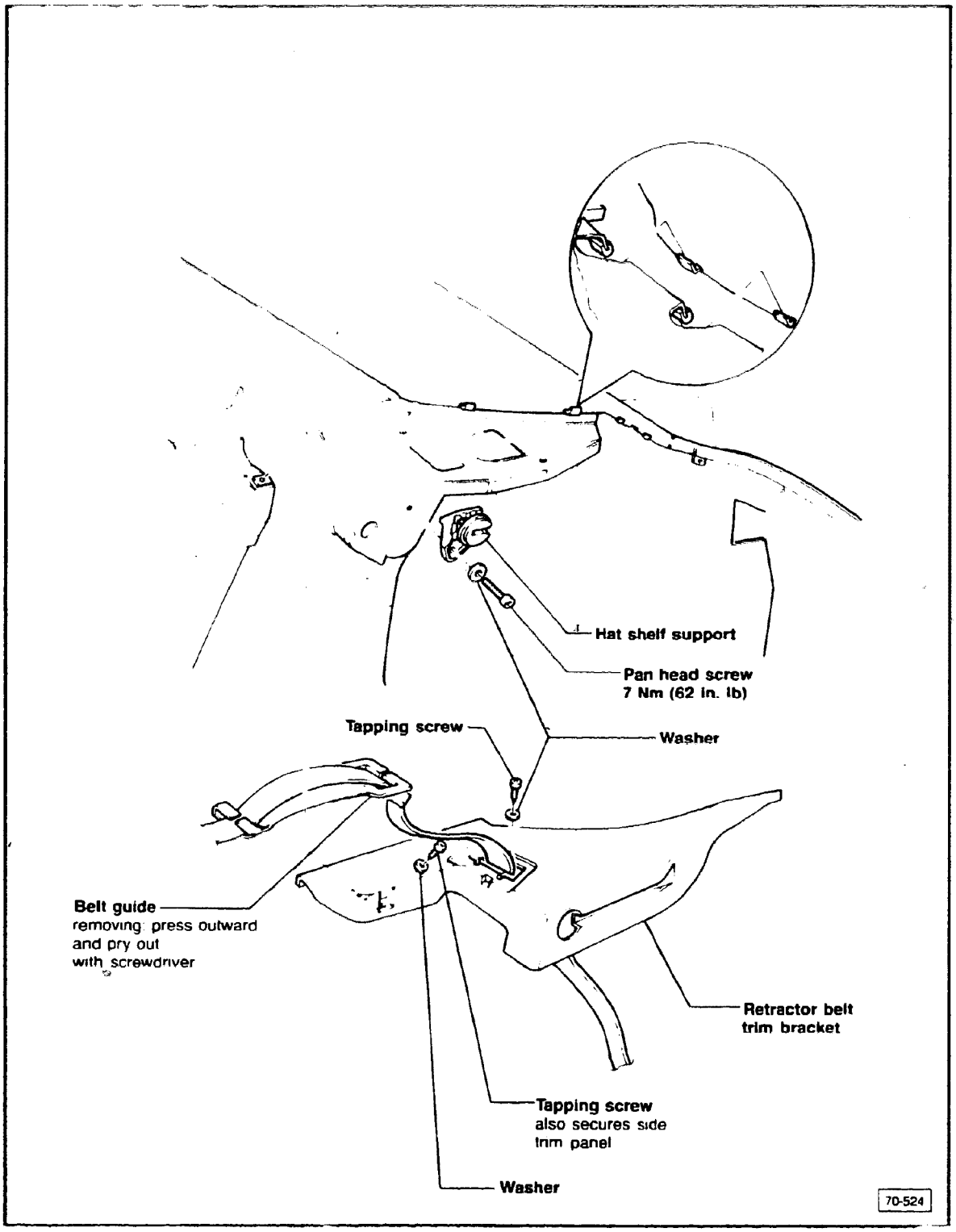

cardiagn.com

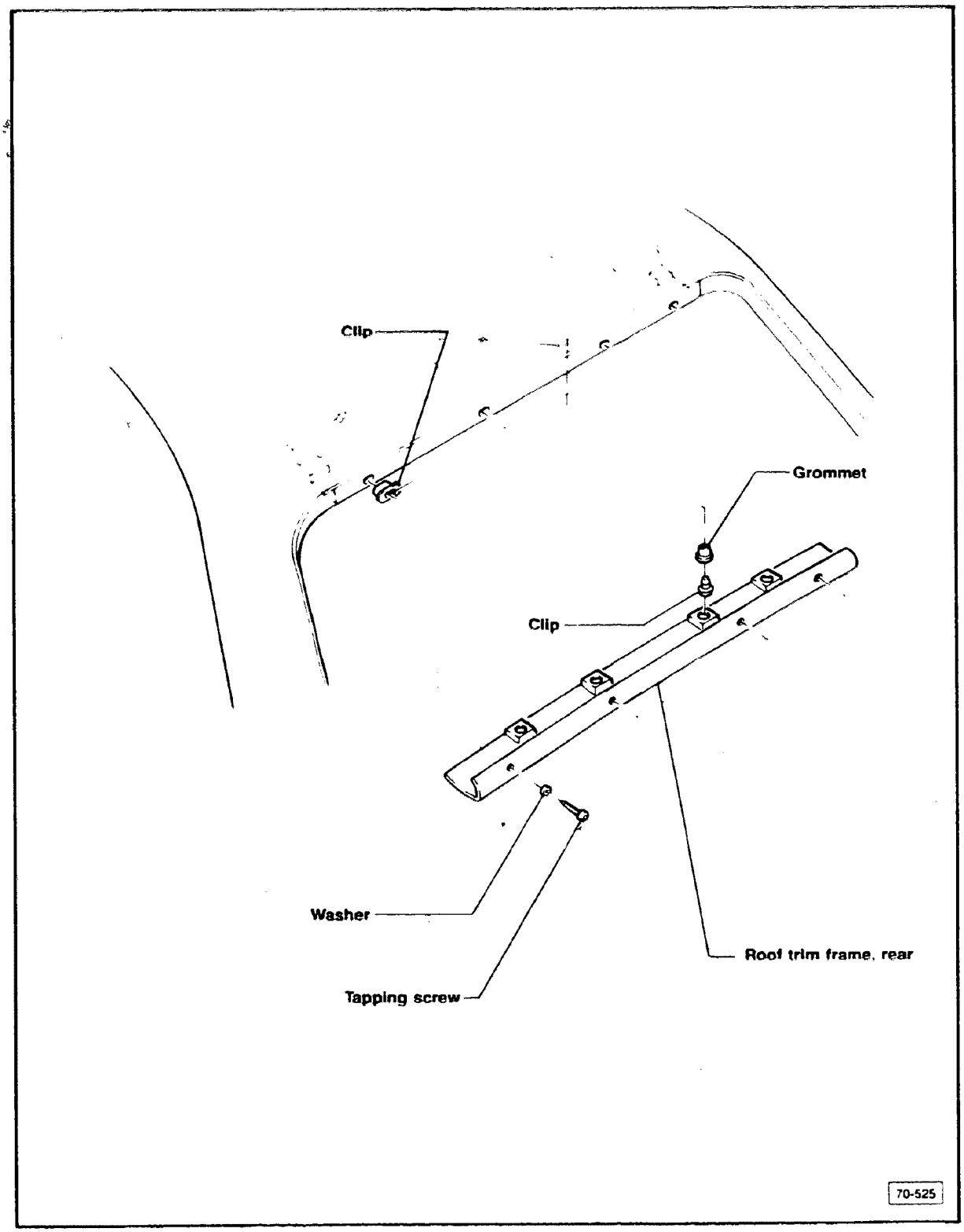

cardiagn.com

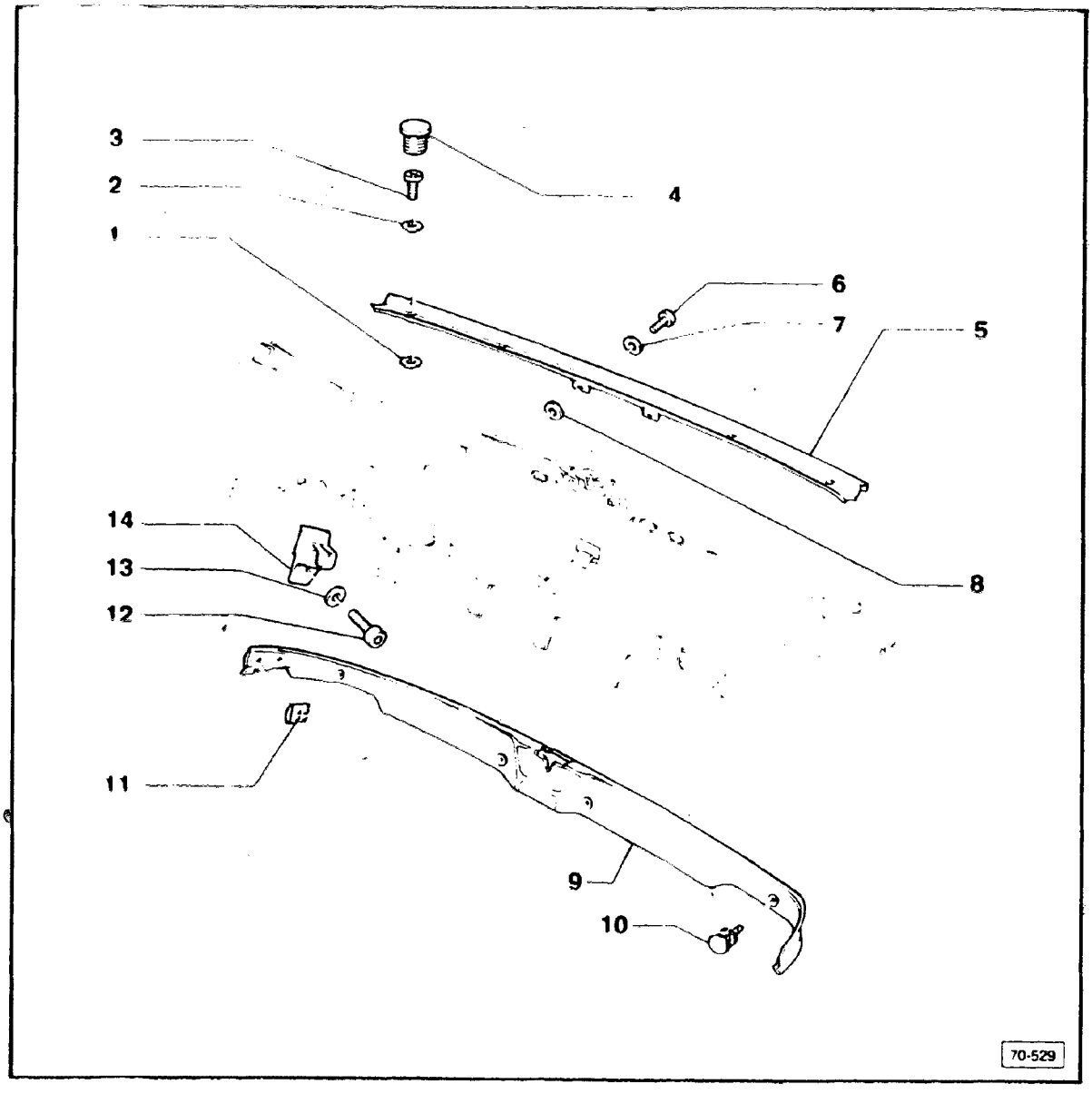

1 — Sealing washer
2 — Washer
3 — Oval head screw
4 — Cap
5 — Edge protector
6 — Oval head screw
remove license plate trim first
7 — Washer
8 — Sealing washer
9 — Rear apron upper trim panel
10 — Clip
11 — Locking cam
12 — Tapping screw
13 — Washer
14 — Locking tab, hat shelf

cardiagn.com

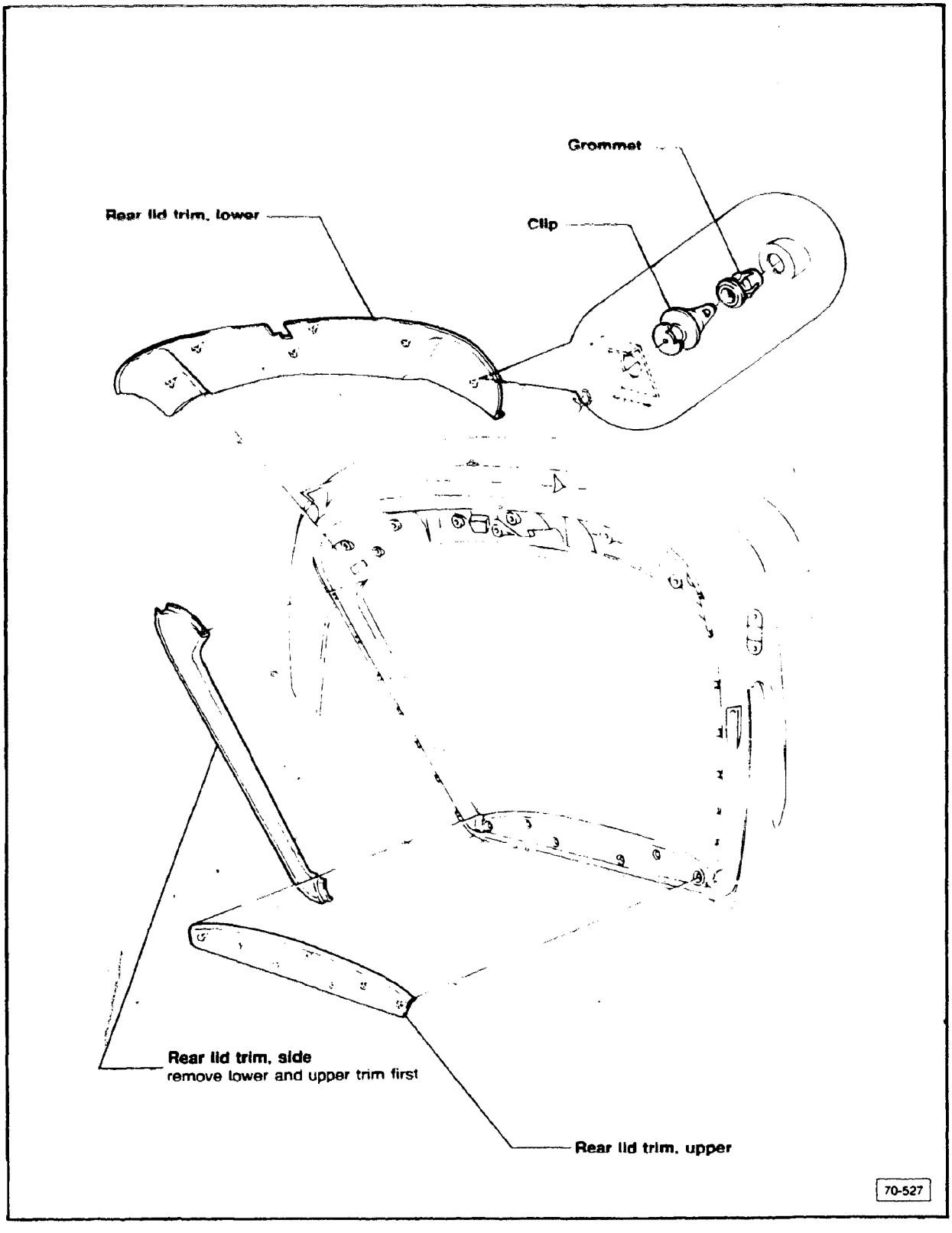

cardiagn.com

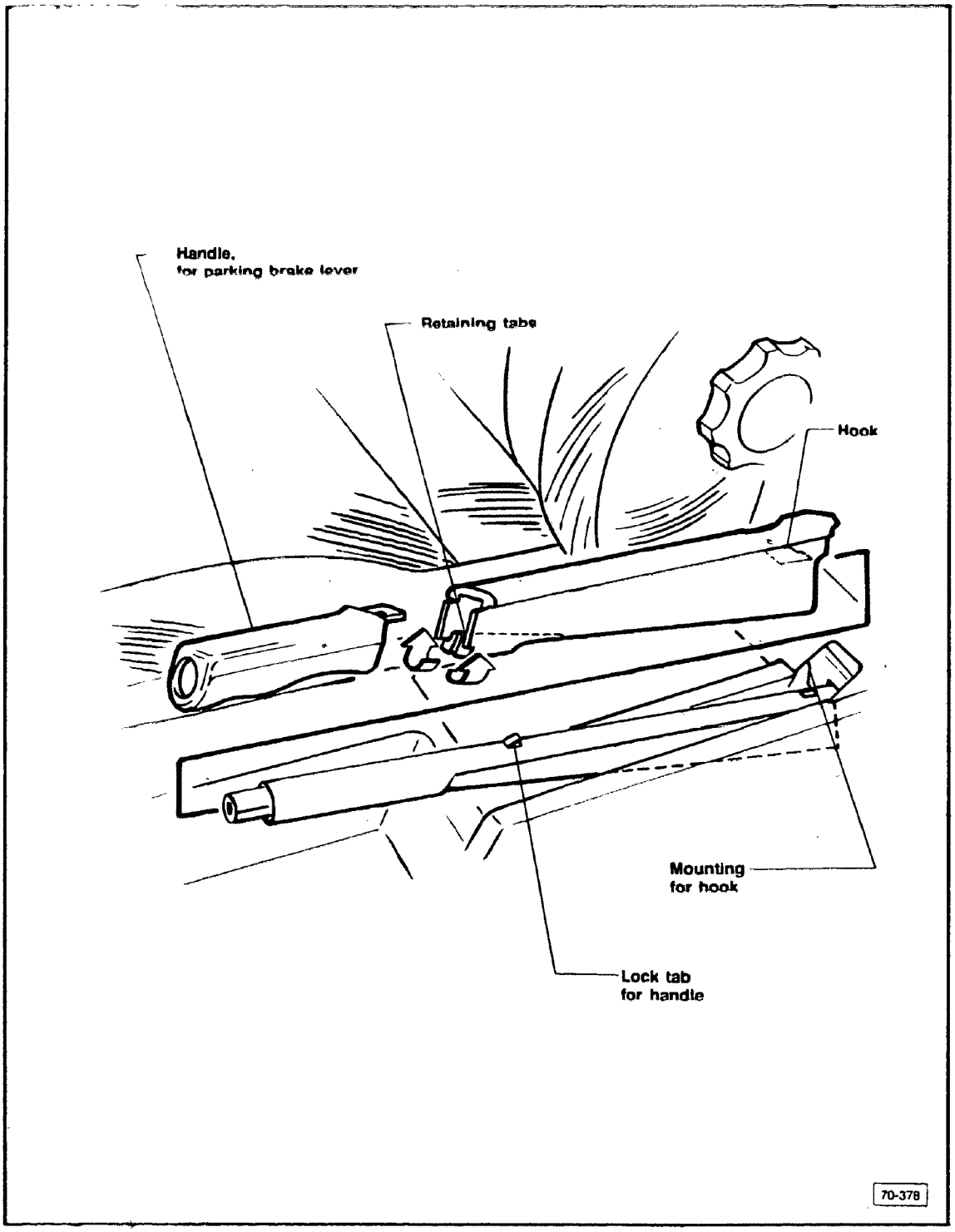

cardiagn.com

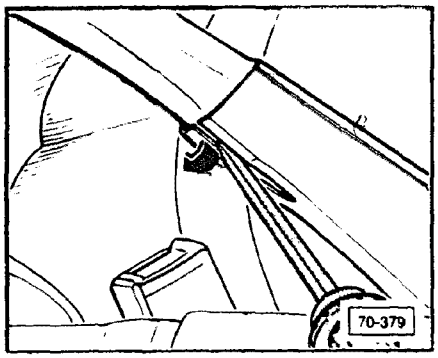

Parking brake lever trim, removing

Note

Parking brake lever trim must be removed before disassembly of parking brake.

- pull up hand brake lever
- pry off retaining tabs (**arrow**), pull handle forward

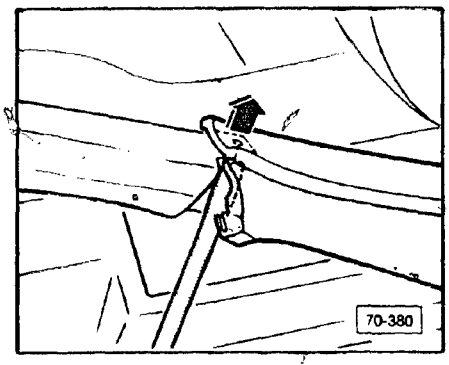

- lift trim slightly
- remove handle by lifting off lock tab (**arrow**)
- pull rear trim forward

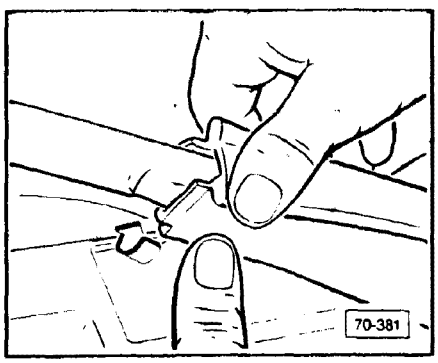

Parking brake lever trim, installing

Install in reverse order of removal, note the following:

- press trim downward in rear to engage hook
- insert retaining tabs into hand brake lever (as shown)
- insert handle

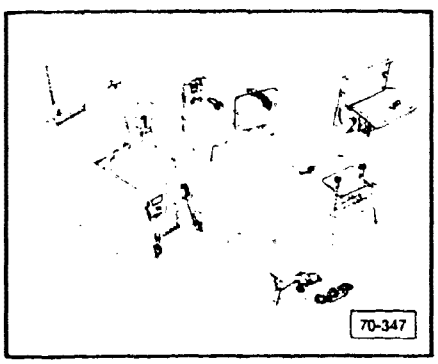

Center console, removing

- disconnect battery ground strap
- remove ashtray
- unclip trim plate, remove screws
- lift center console upwards and forward off handbrake lever

cardiagn.com

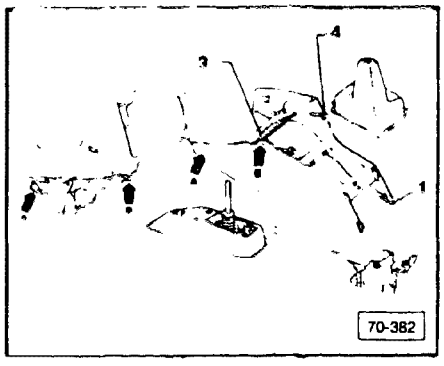

- unscrew shift lever knob
- remove bolt **1**
- pull trim **3** away, unscrew hex head screws
- pull out center console toward rear from guides **A** and **B**

Center console, installing

Reinstall all components in reverse order of removal.

Instrument panel, removing

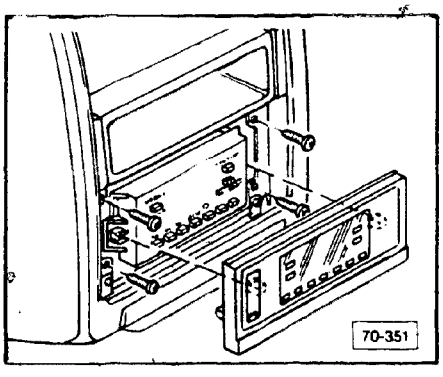

- remove trim panel
- unscrew control, pull out and remove multi-pin connector
- remove multi-pin connector from heater control

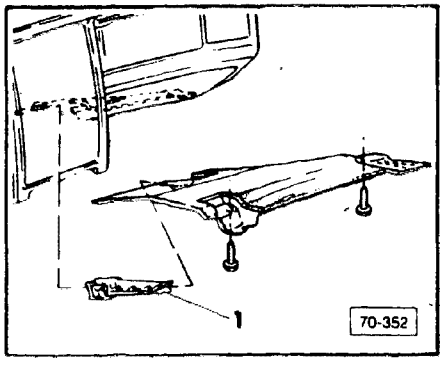

- remove cover on front passenger's side and pull out of bracket **1**

cardiagn.com

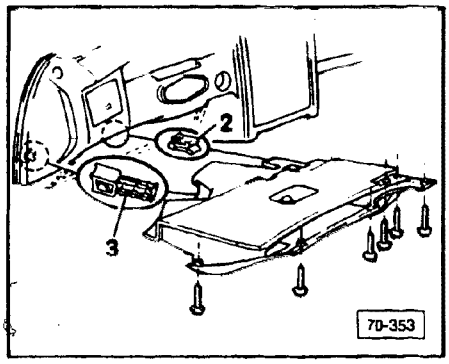

- remove shelf on driver's side
- pull shelf off retaining clip **2** and bracket **3**

Note

The wiring harnesses in the instrument panel are routed in cable ducts.

- disconnect terminal connection or pull off multi-pin connector

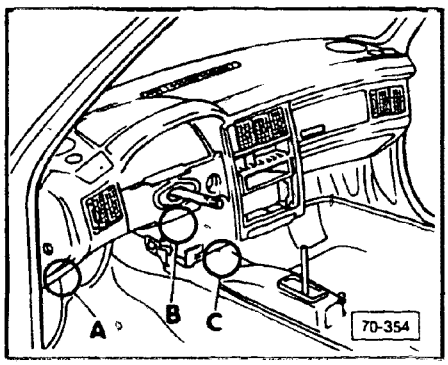

A — remove wiring harness from relay carrier and relay plate with fuse box
- ground wire

B — wiring harness outlet from instrument panel located here

C — terminal connections from tunnel located here. Detach connection from welded stud on cross member

Note

Switches do not have to be disconnected

cardiagn.com

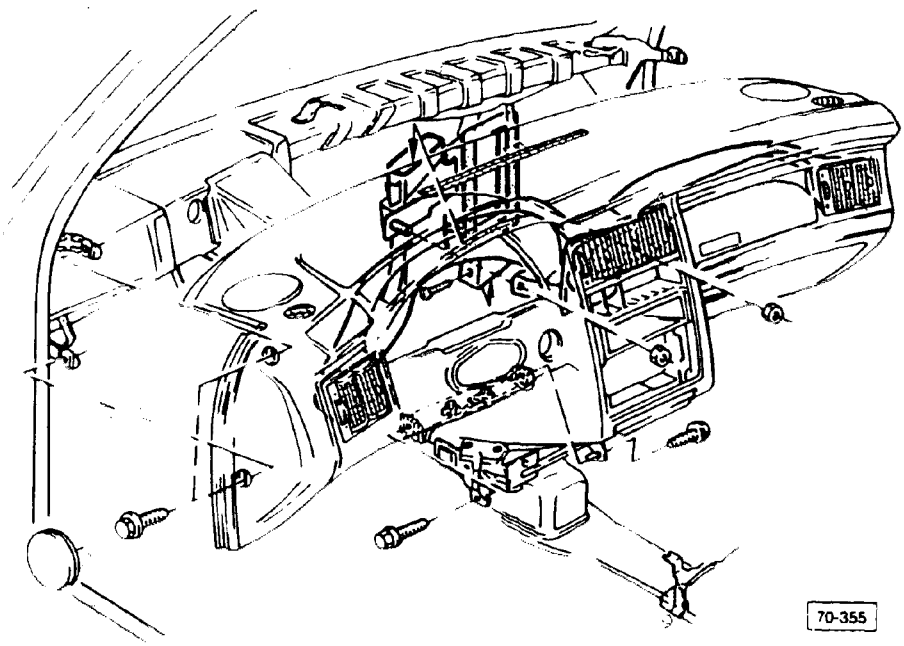

- remove cover caps and take off screws
- remove nuts from heater housing
- remove Phillips screw from defroster duct
- push-up defroster vent duct connector slightly, and carefully pull away from instrument panel

Instrument panel, installing

Install all components in reverse order, noting the following:

- push hose from defroster duct up and into blower nozzles
  - ensure secure fit
- keeping side and bottom mounting screws loose, adjust gap between instrument panel and windshield to approximately 7.0 mm (9/32 in.)
- close both front doors
- ensure retaining tabs of trim panel fit behind edge of housing
- adjust instrument panel to same height as door trim panels
  - with doors closed
- tighten instrument panel mounting screws
  - 5 Nm (3.7 ft lb)

cardiagn.com

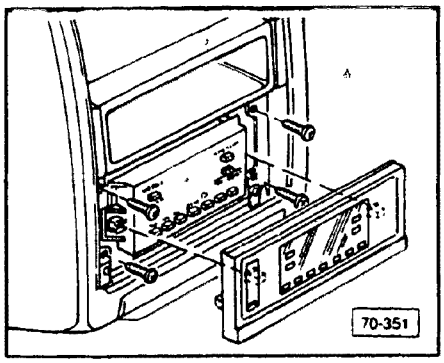

Instrument panel center section, removing

- remove trim

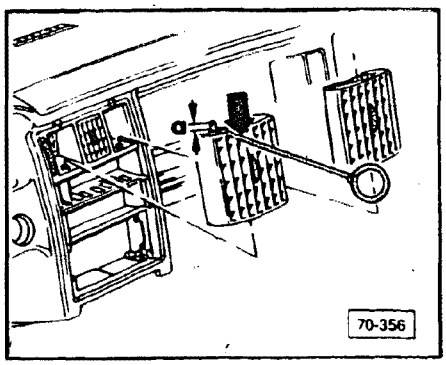

- pull out swivel fittings on left and right with bent wire (**arrow**)
  - a = 3-4 mm (1/8-5/32 in.)
- insert tool at the top to the right or left of the center section and behind the swivel fitting housing edge

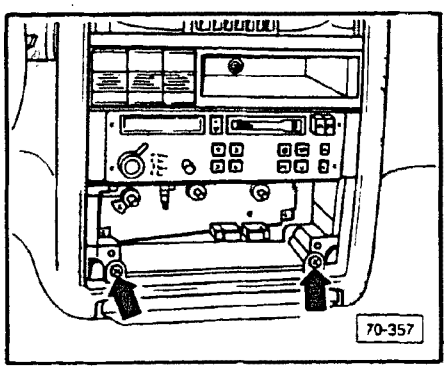

- remove Phillips screws (**arrows**) and press ashtray down slightly

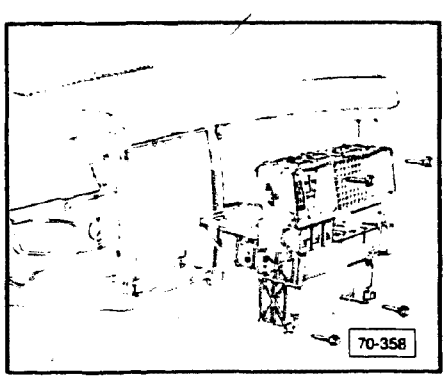

- unscrew center section and remove
- detach connector from switch or radio

Instrument panel center section, installing

Reinstall all components in reverse order of removal.

cardiagn.com

CAUTION

Before starting work, disconnect battery ground strap.

CAUTION

Read all warning labels and cautions before proceeding with repairs.

CAUTION

When using hot air blower, **do not** heat roof to over 100°C (212°F), otherwise paint will be damaged.

Tools required

- wallpaper roller
- toothed trowel
- utility knife with trapezoidal blade
- hot air blower

Materials required

- adhesive **AKL 407 000 05**

Headliner, removing

Note

The bonded headliner cannot be removed without being destroyed

Since the strength of the roof of vehicles with sunroof is reinforced with the water tray, the headlining does not need to be cut into strips

- remove headlining from front up to sunroof opening, from below
- heat up adhesive between headlining and plenum with hot air blower
  - to maximum 100°C (212°F)
- remove headlining from roof
- remove **A**, **B**, **C**-pillar trim, roof frame trim
- remove sunroof completely (see Repair Group 60), including guide profile
- remove beading between windshield and headliner
- remove beading between rear window and headliner

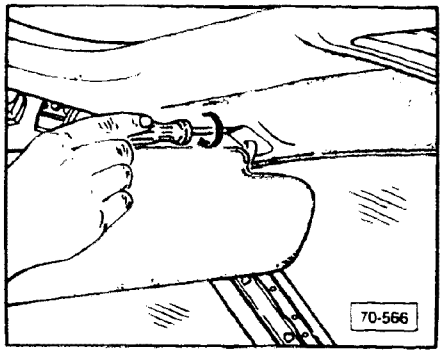

- pry out caps for both sunvisor brackets and screwdriver
- remove sunvisors and brackets (**arrows**)
- remove interior light
- remove assist handles
- pull out terminal for interior light

cardiagn.com

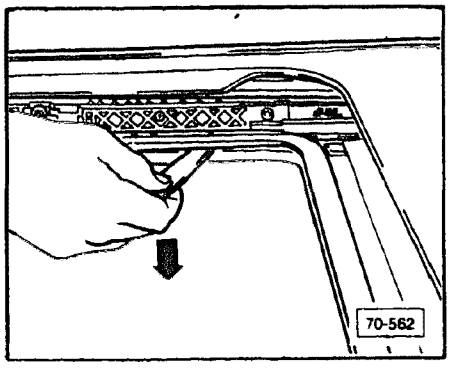

- remove plastic frame for sunroof opening
  - use plastic wedge (as shown)
- press headlining down (**arrow**)

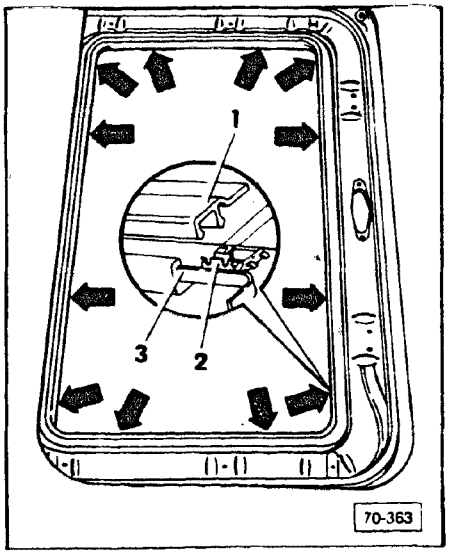

- remove cover frame **1** for sunroof cutout from top of clips **2** (**arrows**)
  - note reinforcement in headlining **3**
- pull headlining up to sunroof cutout

Note

Headlining is glued **only** in area of water tray.

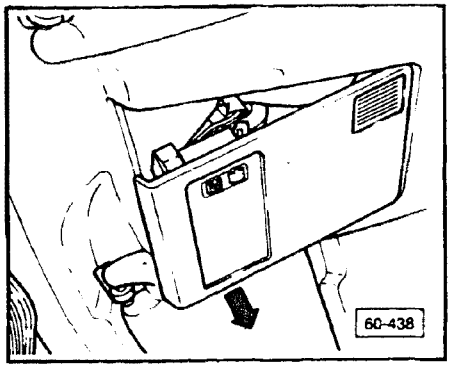

- pry off cover for cable drive
- unplug electrical connectors, remove cover (**arrow**)
- pull down headlining up to sunroof opening

cardiagn.com

Before starting installation of new headliner, note the following:

- install headliner at room temperature of at least 20 C (68°F)
- if necessary, warmup adhesive cartridge in hot water
- adhesive is applied to thickness of 2-3 mm (1/8 in.)
- shorten tip of adhesive cartridge to half length and cut off at angle

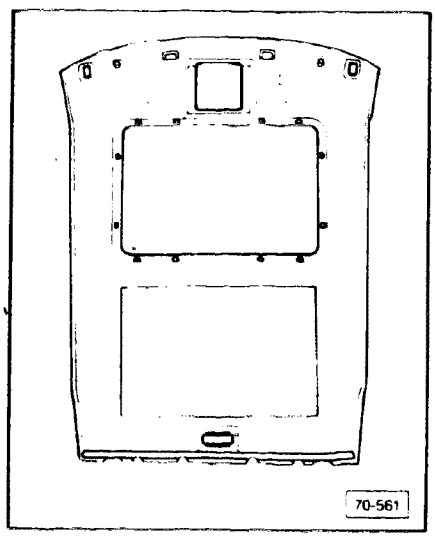

Headliner, installing

- fold down front passenger seat backrest
- guide replacement headlining in through open rear lid
- apply adhesive material to headlining in parallel runs with toothed trowel
- allow approximately 30 minutes before installing headliner to roof
  - if installation is delayed, adhesive must be scraped off and reapplied later
- remove excess adhesive immediately with water
  - remove partially dried adhesive with 3M* General Purpose Adhesive Cleaner or equivalent
  - fully hardened adhesive **cannot** be removed
- immediately before bonding headlining, heat adhesive from distance of 200-300 mm (8-12 in.) to approximately 60°C (140°F)
- guide headlining first on top over both C-pillar trim panels
- fasten headlining in front lightly with sunvisor brackets
- position headlining toward sunroof cutout, and press on completely

cardiagn.com

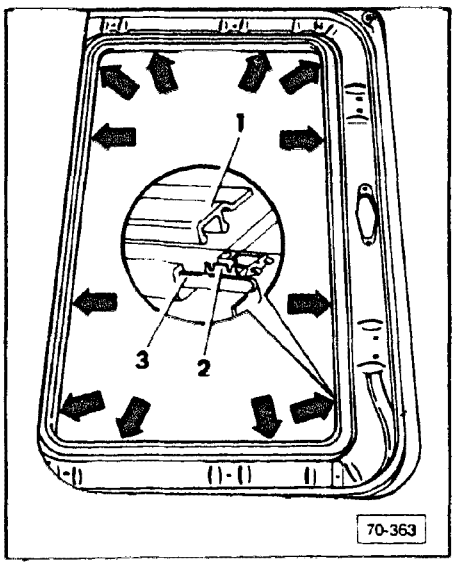

- insert cover frame in sunroof cutout
- roll the headlining onto the roof with a wallpaper roller — beginning in the center of the roof or water tray and work outward **(arrows)**
- mount interior equipment
- reconnect battery groundstrap

cardiagn.com

Index

Backrest (Coupe)
- sender unit, adjusting 72.15
- servo motor, removing/installing 72.12

Control unit (Coupe)
- removing/installing 72.9

Driver's seat (Coupe)
- removing/installing 72.13
- sender unit, adjusting 72.13

Folding seat back (Coupe)
- removing/installing 72.3

Fore/aft adjustment (Coupe)
- actuators, removing 72.12
- actuators, installing 72.13
- sender unit, adjusting 72.14
- servo motor, removing/installing 72.11

Height adjustment (Coupe)
- actuators, removing/installing 72.12
- front height sender unit, adjusting 72.14
- rear height sender unit, adjusting 72.14
- servo motor, removing/installing 72.11

Power backrest (Coupe)
- assembly 72.7
- removing/installing 72.10

Power seat (Coupe)
- assembly 72.5
- driver's seat, testing 72.15
- installing 72.9
- removing 72.8

Rear seat bench
- removing/installing 72.2

Rear seat bench (Coupe)
- removing/installing 72.3

Seat back armrest (Coupe)
- removing/installing 72.4

Seat switch unit (Coupe)
- removing/installing 72.10

Side upholstery, rear seat back (Coupe)
- removing/installing 72.3

Supply-voltage relay (Coupe)
- removing/installing 72.9

Troubleshooting

Backrest
- does not adjust 72.21

Driver's seat
- does not return to memorized position 72.23

Front passenger's seat
- will not adjust with switches 72.25

Power seat w/ memory
- troubleshooting 72.16

Seat belt warning
- does not function 72.27

Seat frame
- modification 72.28

cardiagn.com

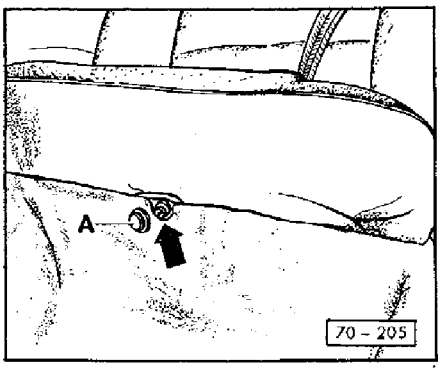

Rear seat bench, removing/installing

Removing

- pry off both cover caps **A**
- remove both Phillips screws
- raise seat bench slightly, pull out toward front

Installing

- install in reverse order of removal

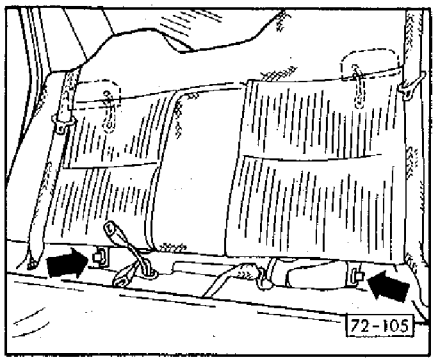

Rear seat back, removing/installing

Removing

- bend up both clips (**arrows**)
- lift seat back upwards and out

Installing

- install in reverse order of removal

cardiagn.com

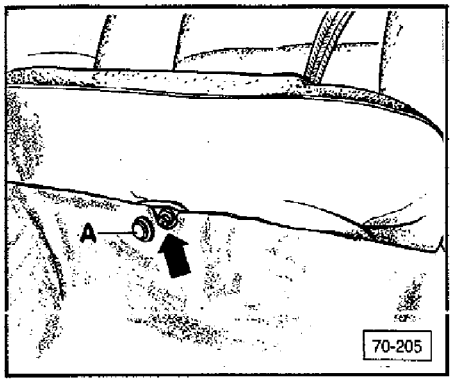

Rear seat bench, removing

- pry off both cover caps **A**
- remove both Phillips screws (**arrow**)
- raise seat bench slightly, pull out toward front

Rear seat bench, installing

Reinstall all components in reverse order of removal.

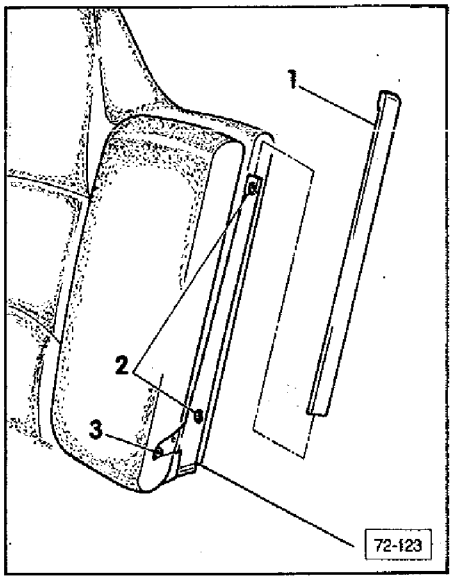

Folding rear seat back, removing

- pull cover **1** upwards
- unscrew bolts **2**
- fold over retainer, pull seat back from inside out of bearing

Folding rear seat back, installing

Reinstall all components in reverse order of removal.

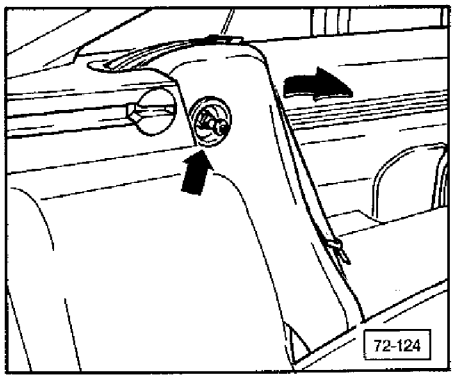

Side upholstery, rear seat back, removing

- fold seat back forwards
- bend side upholstery forward slightly, and pull out from below

Side upholstery, rear seat back, installing

Reinstall all components in reverse order of removal.

cardiagn.com

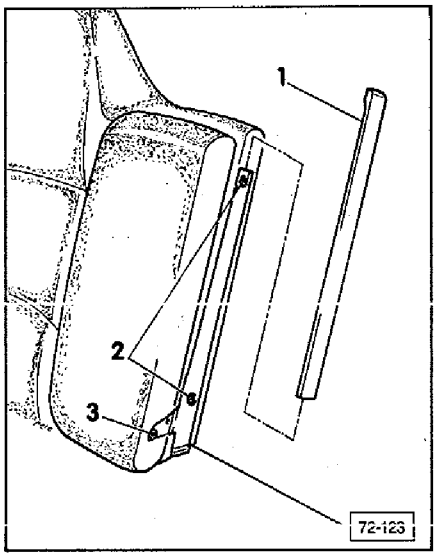

Seatback armrest, removing

- fold drivers side seatback forward
- remove nuts **3**
- remove armrest from bracket, then out of pivot

Seatback armrest, installing

Reinstall all components in reverse order of removal.

cardiagn.com

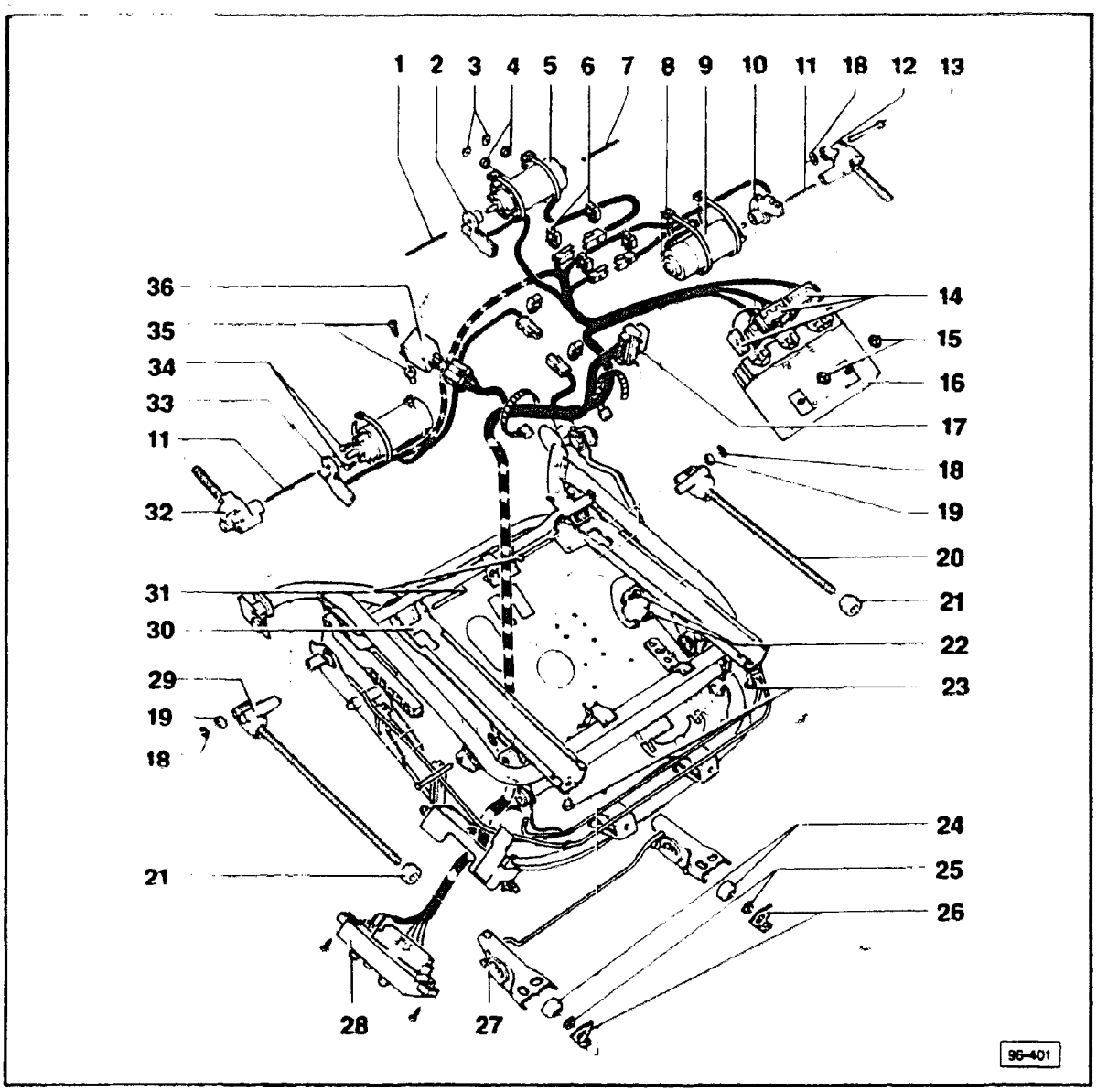

Note

Wiring harness and switch are supplied as one unit, and cannot be individually replaced.

1 — **Drive shaft, left**
fore/aft adjustment

2 — **Sender**
fore/aft adjustment
drivers seat only

3 — **Lock nut**

4 — **Grommet**

5 — **Servo motor**
fore/aft adjustment
removing/installing, page 72 11

6 — **Retaining clip**

7 — **Drive shaft, right**
fore/aft adjustment

8 — **Tie-wrap**

9 — **Servo motor**
front height adjustment
removing/installing, page 72 11

10 — **Sender**
front height adjustment
driver's seat only

cardiagn.com

11 — **Drive shaft, actuator**
front height adjustment

12 — **Actuator**
front height adjustment
removing/installing, page 72 12

13 — **Mounting bolt**
for actuator

14 — **Connector, control unit**
refer to appropriate wiring diagram for connector cavity location

15 — **Lock nut**

16 — **Control unit**
removing/installing, page 72 9

17 — **Connector, wiring harness**
for power seat with memory

18 — **Lock ring**

19 — **Shim**

20 — **Adjusting rod, right**
fore/aft adjustment

21 — **Stop, rear**

22 — **Mounting bolts, servo motor**

23 — **Rivets**
attachment of spindle bracket

24 — **Stop, front**

25 — **Bushings**

26 — **Spindle bracket**
removing, grind and drive out rivets
installing, secure with pop-rivets or M-5 bolts

27 — **Guide rails**
removing/installing, page

28 — **Switch unit, with wiring harness**
removing/installing, page 72 10

29 — **Actuator, left**
fore/aft adjustment
removing/installing, page 72 12

30 — **Seat frame, with guide rails**
removing/installing seat, page 72 8

31 — **Mounting bolts, for actuators**

32 — **Actuator, rear**
height adjustment
removing/installing, page 72 12

33 — **Sender**
rear height adjustment
driver's seat only
removing/installing, page 72 13
adjusting, page 72.14

34 — **Mounting bolts**
height adjustment servo motor, rear

35 — **Fasteners, supply-voltage relay**

36 — **Supply-voltage relay**
removing/installing, page 72.9

cardiagn.com

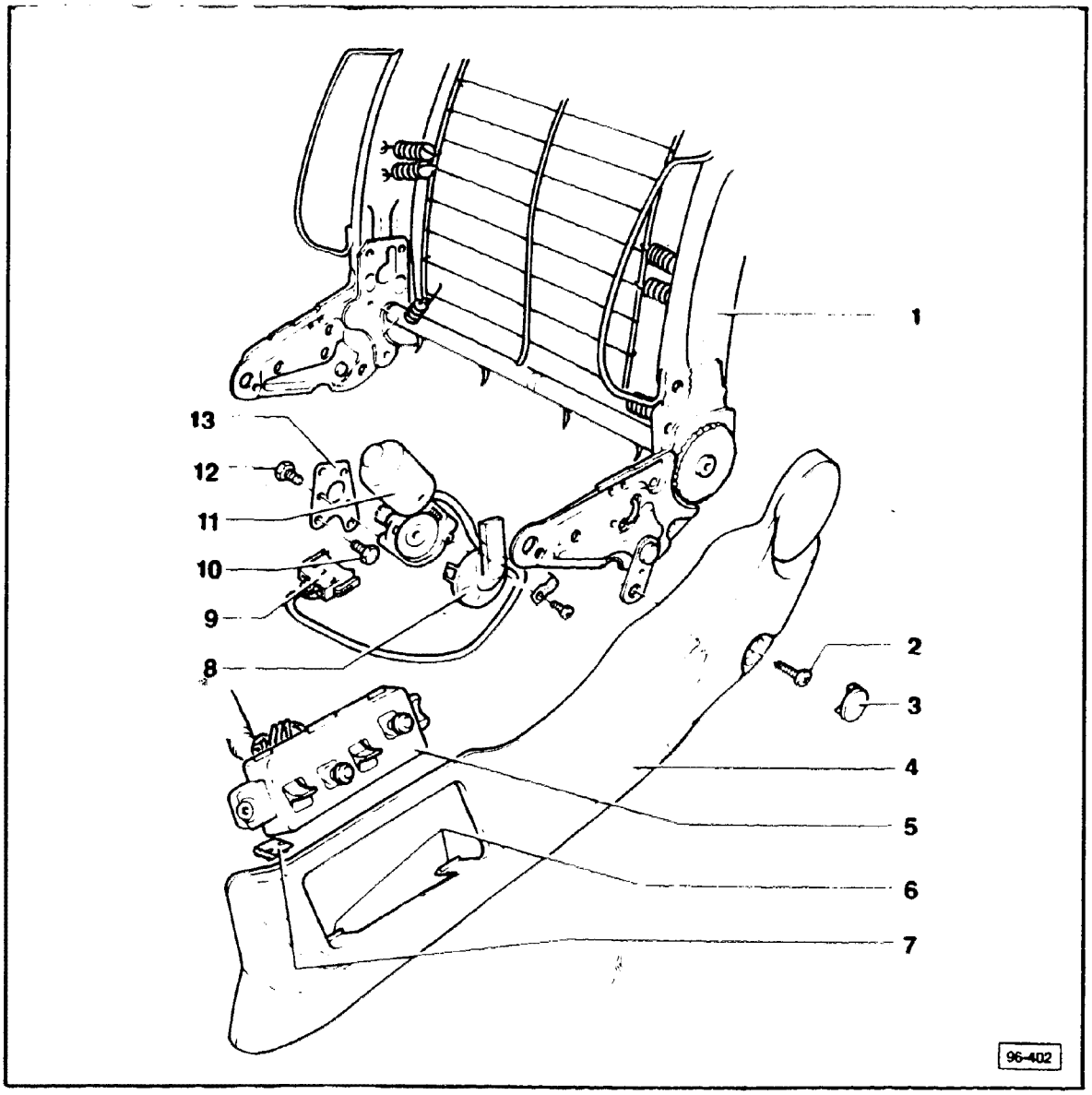

1 — **Frame, backrest**
removing/installing, page 72.10

2 — **Mounting bolt, side trim panel**
installed into stop pin for backrest

3 — **Cover cap**
pry off

4 — **Side trim panel**

5 — **Switch unit**
removing/installing, page 72.10

6 — **Switch unit, detents**
integrated into side trim panel
pry out with screwdriver

7 — **Clip**
pry out clip **before** removing side trim panel

8 — **Sender**
backrest adjustment
removing/installing,
adjusting, page 72.15

9 — **Connector**
see appropriate wiring diagram for location of connector cavities

10 — **Mounting bolt**

11 — **Servo motor**
backrest adjustment
removing/installing, page 72.12

12 — **Mounting bolt**

13 — **Retaining bracket**
secures backrest adjustment servo motor

cardiagn.com

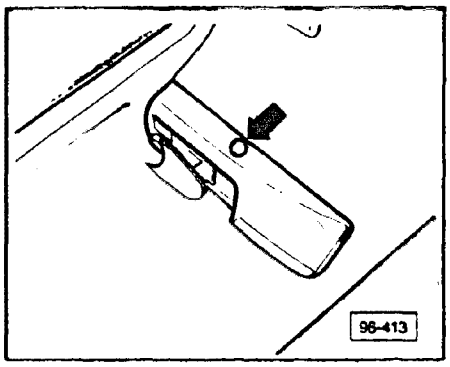

Note

Before removing seat from vehicle,

- move seat to rear stop
- raise front seat height to upper stop
- tilt backrest to forward stop

Power seat, removing

- pry out plastic clip (**arrow**)
- push seat rail covers forward and remove from under seat

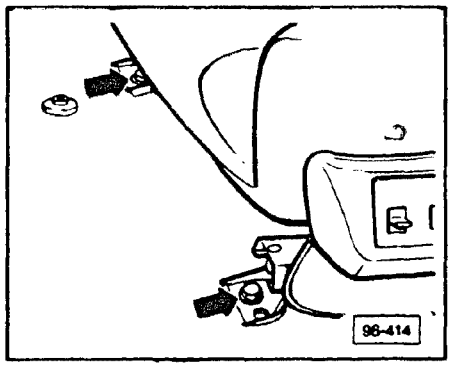

- remove mounting bolts (**arrows**)

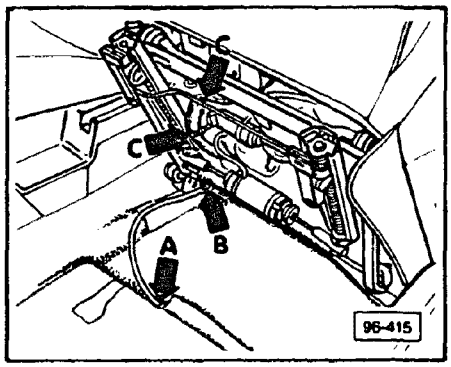

- raise seat slightly in front, and open tie-wrap **A**
- push seat toward rear
- lay seat back as far as possible
  - take care not to damage carpet
- loosen cable attachment **B**, both tie-wraps **C** on seat
- disconnect wiring harness at control unit on seat
  - disconnect heated seat element, if applicable
- disconnect seat belt warning system at wiring harness
- carefully withdraw wiring harness from seat frame
- lift and remove seat from vehicle

cardiagn.com

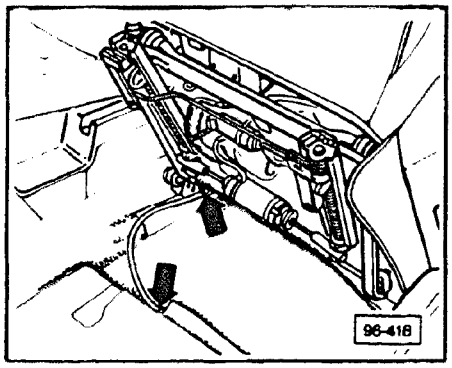

Power seat, installing

Reinstall all components in reverse order, noting the following:

- attach wiring harness to locating points (**arrow**)

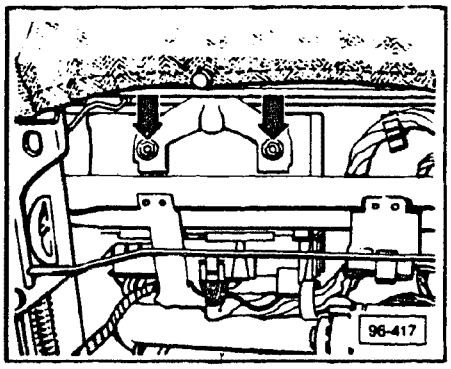

Control unit, removing

- remove driver's seat
- remove control unit mounting bolts (**arrows**) at retaining bracket
- pull off electrical connector on control unit
- remove control unit from seat

Control unit, installing

Reinstall all components in reverse order of removal.

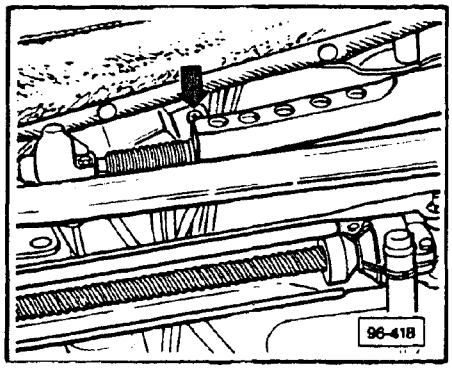

Supply-voltage relay, removing

- remove driver's seat
- remove mounting screw for supply-voltage relay (**arrow**)
- pull off electrical connector on relay
- remove supply-voltage relay

Supply-voltage relay, installing

Reinstall all components in reverse order of removal.

cardiagn.com

Switch unit on seat, removing

- remove mounting screw from stop pin for seatback
- remove side trim panel from switch trim on seat frame
- remove switch unit mounting screws
- remove switch unit

Switch unit on seat, installing

Reinstall all components in reverse order of removal, noting the following:

- switch unit and wiring harness can **only** be replaced as a complete set.

Backrest, removing

- remove seat from vehicle
- remove side trim panel mounting screw from stop pin
- pry out clip
- remove side trim panel from switch trim on seat frame
- press pins (for cover cap) through on opposite side of seat and remove cap
- remove screw from stop pin for seatback
- remove lock washers on left and right side
- remove six-pin connector (driver's seat) from control unit
  - only disconnect two-pin connector on passenger seat
- remove backrest from retaining bolts, remove from vehicle

Backrest, installing

Reinstall all components in reverse order of removal.

cardiagn.com

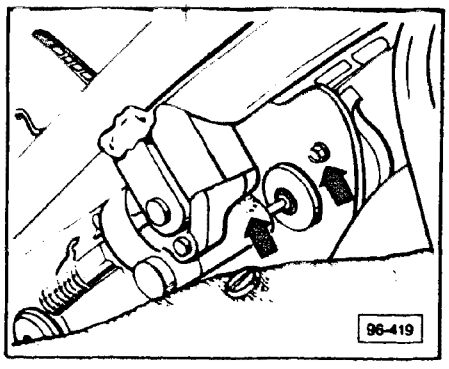

Height adjustment servo motor, removing

- remove seat
- remove servo motor mounting bolts (**arrows**)
- remove drive shaft from servo motor
- pry sensor from servo motor
- pull off electrical connector from servo motor
- remove servo motor from seat

Height adjustment servo motor, installing

Reinstall all components in reverse order of removal.

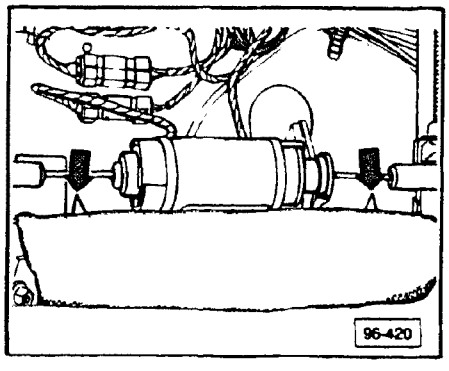

Fore/aft adjustment servo motor, removing

- remove seat
- bend up tabs securing seat cover (**arrows**)
- loosen seat cover on rear cross member as necessary

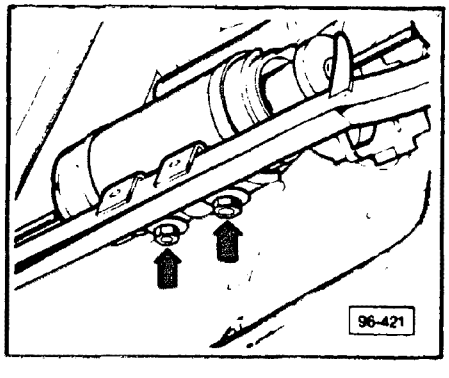

- remove servo motor from cross member
- remove drive shaft on both sides
- pry sensor from servo motor
- pull off electrical connector from servo motor
- remove servo motor from seat

Fore/aft adjustment servo motor, installing

Reinstall all components in reverse order of removal.

cardiagn.com

Backrest adjustment servo motor, removing

- remove seat
- remove backrest
- let seat cover hang below backrest, pull cover off as far as necessary
- remove hex head bolts from motor bracket at seatback hinge
- remove bracket from motor
- carefully pry backrest sensor from motor
- remove or unsolder lead from motor

Backrest adjustment servo motor, installing

Reinstall all components in reverse order of removal.

Height adjustment actuators, removing

- remove seat
- pry lock ring out of mounting bolt
- remove bolt
- remove drive shaft from actuator
- unscrew actuator from bracket with spindle

Height adjustment actuators, installing

Reinstall all components in reverse order of removal.

Fore/aft adjustment actuators, removing

- remove seat
- grind or drill out both rivets for spindle guide rail
- remove spindle brackets and stop
- connect a fused (**30A**) external voltage supply to fore/aft adjustment motor
- move guide rails toward front and remove
- remove lock ring from mounting bolt of corresponding actuator and remove bolt
- remove actuator with spindle

cardiagn.com

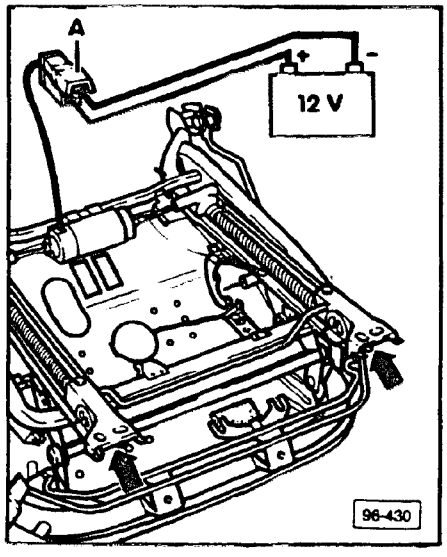

Fore/aft adjustment actuators, installing

Reinstall all components in reverse order of removing, noting the following:

- install guide rails on spindles in direction of arrows
- connect a fused (**30A**) external voltage at connector **A**
  - a second technician may be necessary
- move guide rails into place
- reinstall spindle brackets with pop-rivets or M-5 bolts

Driver's seat sender units, removing

- remove appropriate servo motor
- carefully pry sender off servo motor

Note

Sender units with short wire leads will be supplied for repairs. Disconnect senders to be replaced on a wiring harness. Install new senders with connectors. Make note of wiring color codes.

Driver's seat sender units, installing

Reinstall all components in reverse order of removal.

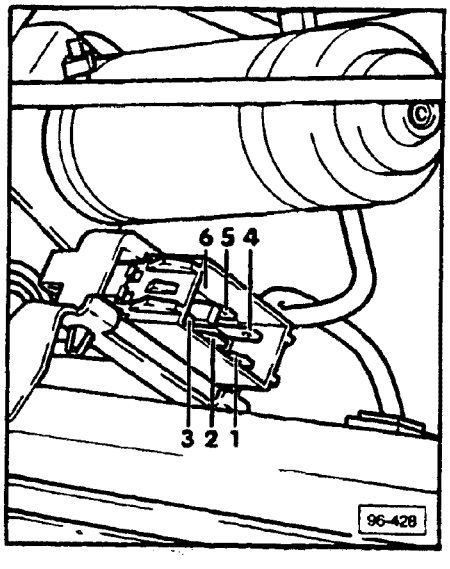

Driver's seat sender units, adjusting

Note

- Only adjust senders with seat removed.
- Only adjust senders if servo motor or sender was replaced.
- Backrest sender must be readjusted if backrest was put into rearmost position when seat was out of vehicle.

Position seat as follows:

- connect a fused (**30 A**) external voltage supply to **6**-pin (brown) connector on driver's seat, terminals **1** and **4**
- move seat into desired position with appropriate adjustment switch

cardiagn.com

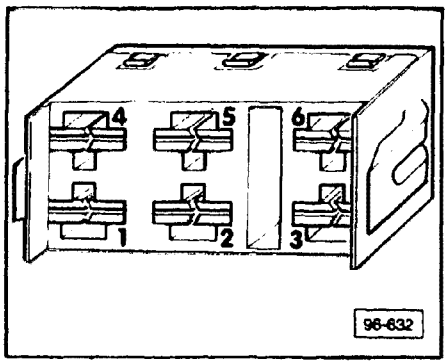

Fore/aft adjustment sender unit, adjusting

- using fore/aft servo motor, move seat to forward stop
- remove fore/aft servo motor
- pry off sender unit from servo motor
- pull off black connector **E** from control unit
- connect tester **US 1119**, set to 20k Ohm scale, between terminals **2** and **5**
- turn sender unit until tester reads approximately 3.78k Ohm
- remount sender unit on servo motor

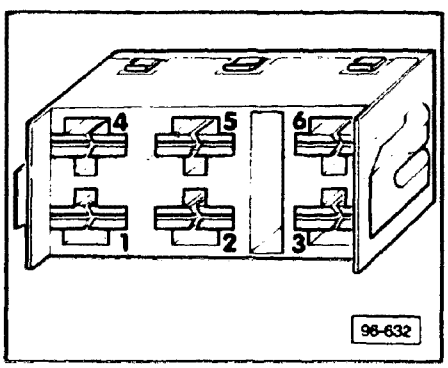

Rear height adjustment sender unit, adjusting

- using seat adjustment switch, raise rear of seat to upper stop
- remove servo motor mounting bolts
- remove servo motor from drive shaft
- pry off sender unit from servo motor
- pull of black connector **E** from control unit
- connect tester **US 1119**, set to 20k Ohm scale, between terminals **2** and **6**
- turn sender unit until tester reads approximately 0.78k Ohm
- remount sender unit on servo motor

Front height adjustment sender unit, adjusting

- using seat adjustment switch, raise front of seat to upper stop
- remove servo motor mounting bolts
- remove servo motor from drive shaft
- pry off sender unit from servo motor
- pull off black connector **E** from control unit
- connect tester **US 1119**, set to 20k Ohm scale, between terminals **2** and **3**
- turn sender unit until tester reads approximately 1.78k Ohm
- remount sender unit on motor

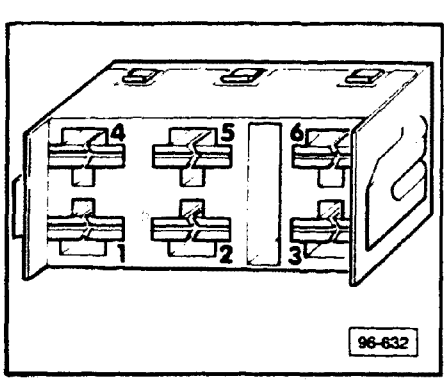

cardiagn.com

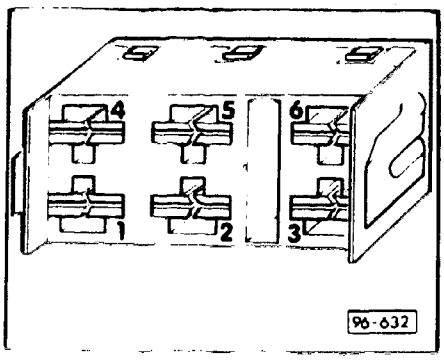

Backrest adjustment sender unit, adjusting

- using backrest adjustment switch, tilt backrest to forward stop
- remove backrest
- let backrest cover hang below seat, pull up as far as necessary
- pry backrest sender from servo motor
- connect tester **US 1119**, set to 20k Ohm scale, between terminals **3** and **6** of green connector **C**
- turn sender until tester reads approximately 9.0k Ohm

- remount sender on servo motor
- reinstall motor with sensor

Note

Install sender so drive pin and retaining clip engage corresponding slots on adjustment servo motor.

Power driver's seat, testing

- reinstall driver's seat into vehicle
- using seat adjustment switches, adjust seat to all positions
- refer to seat troubleshooting if seat cannot be adjusted to all positions

Note

Seat memory button on seat switch **must not** be pressed before ending the testing.

cardiagn.com

CONTINUED IN THE

BEGINNING OF NEXT ROW

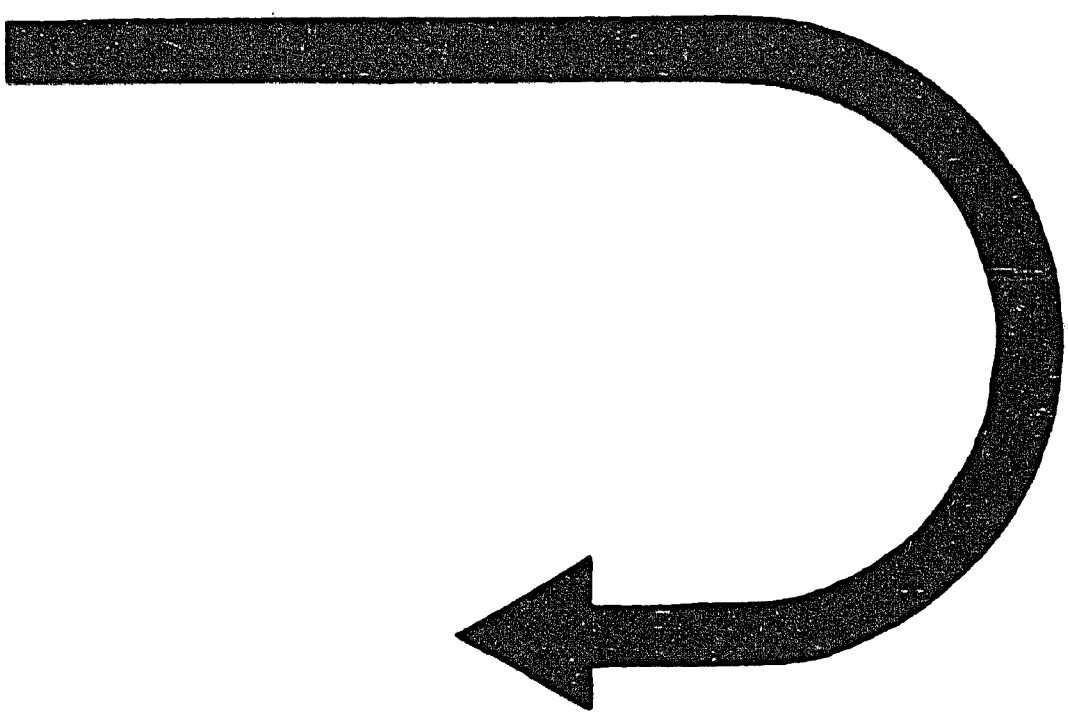

cardiagn.com

CAUTION

DO NOT damage, enlarge or bend connector terminals or cavities by forcing probes into them when performing electrical checks. Use Connector Test Kit **VW 1594** to make the necessary electrical connections.

Troubleshooting, power seat with memory

Test conditions

- battery is fully charged
- fuse **S12** 15 A OK
- fuse **S23** 30 A in auxiliary relay panel **OK**
- circuit breaker 20 A in auxiliary relay panel **OK**
- use **US 1119** for electrical checks

Driver's seat will not adjust

Circuit breaker for seat memory defective or voltage supply for driver's seat interrupted

- remove circuit breaker 20 A from auxiliary relay panel
- alternately measure voltage supply between each circuit breaker terminal in the auxiliary relay panel and ground
  - must alternate between approximately 12.0 V and 0.0 V
- measure resistance of circuit breaker
  - must be 0.0 ohm

Measurements **OK**	Measurements **not OK**

- replace circuit breaker
  or
- repair open circuit in wiring

End

Driver's seat voltage supply interrupted

- disconnect **6** point connector (brown) from driver's seat
- measure voltage between terminals **1** and **4** then **2** and **5**
  - approximately 12.0 V

One or both voltages **not OK**	Voltages **OK**

- repair open circuit in wiring

End

Go to Ⓐ page 72.17

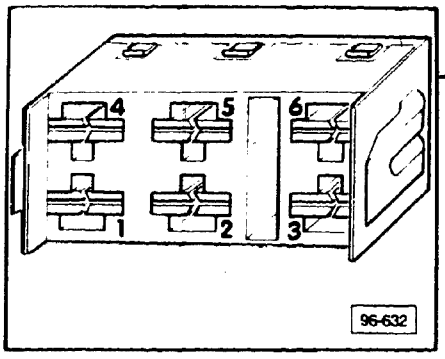

Brown connector (6-point)

cardiagn.com

CAUTION

DO NOT damage, enlarge or bend connector terminals or cavities by forcing probes into them when performing electrical checks. Use Connector Test Kit **VW 1594** to make the necessary electrical connections.

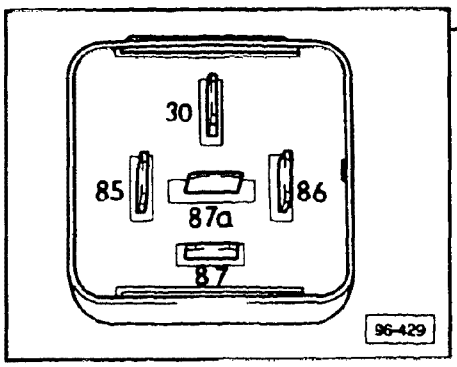

Power seat relay

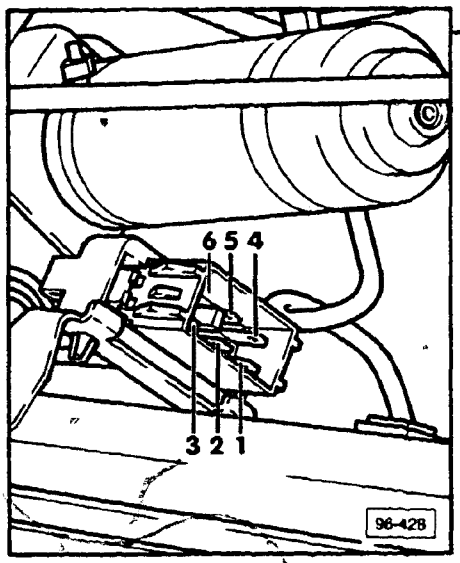

Brown connector on driver's seat (6-point)

Ⓐ

Current supply relay for seat adjustment defective

- remove current supply relay
- measure resistance between relay contacts **30** and **87a**
  - must be 0.0 ohm
- measure resistance between relay contacts **85** and **86**
  - approximately 40.0 ohms

Measurement **not OK** or only one **OK**	Measurements **OK**

- replace current supply relay → End

Perform functional test of driver's power seat

- disconnect memory unit from power seat
- connect a fused (30 A) external voltage supply to brown (6-point) connector on power seat as follows
  - positive (+) to terminal **2**
  - negative (–) to terminal **5**
- operate driver's seat in all positions with switches

Operation not correct or only certain servo motors work	Operation correct

- disconnect external voltage supply from brown (6-point) connector on driver's power seat → Go to Ⓐ page 72.18
- disconnect external voltage supply from brown (6-point) connector on driver's power seat
- remove driver's seat → Go to Ⓐ page 72.19

cardiagn.com

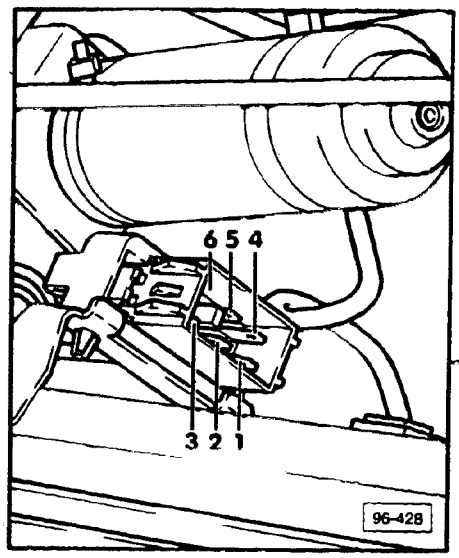

Brown connector on driver's seat (6-point)

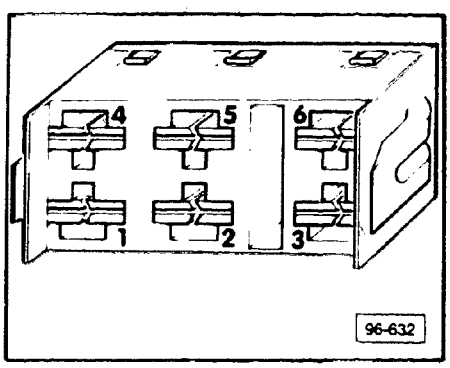

Red connector B (6-point)

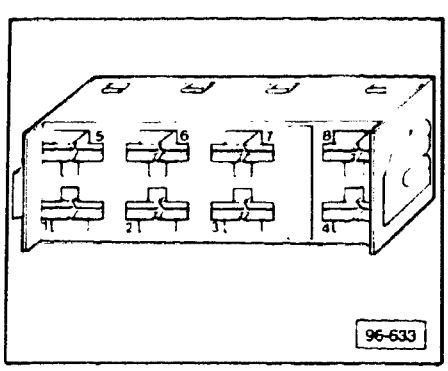

Yellow connector A (8-point)

Ⓐ

Switches on driver's seat frame defective

- remove driver's seat
- disconnect yellow connector **A** (8-point) and red connector **B** (6-point) from control unit
- operate seat switch in appropriate direction while performing following resistance checks
- measure resistance between contact **5** of brown connector (6-point) on driver's seat and contacts **2**, **3**, **5**, and **6** of red connector **B** (6-point) one after the other
  - must be 0.0 ohm
- measure resistance between contact **5** of brown connector (6-point) on driver's seat and contacts **2**, **4**, **6** and **8** of yellow connector **A** (8-point) one after the other
  - must be 0.0 ohm

Resistance measurements **not OK**	All resistance measurements **OK**
■ replace defective switch(es) - or ■ repair open circuit in wiring	Go to Ⓐ page 72.22

End

CAUTION

DO NOT damage, enlarge or bend connector terminals or cavities by forcing probes into them when performing electrical checks. Use Connector Test Kit **VW 1594** to make the necessary electrical connections.

cardiagn.com

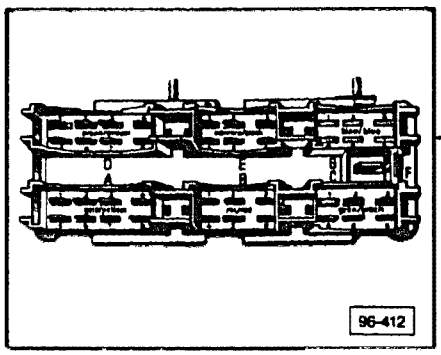

Control unit connectors

Ⓐ

Contact switch in driver's door defective

- remove brown connector **D** (8-point) from control unit
- measure resistance between contact **4** and ground
  - must be 0.0 ohm with door open
  - must be ∞ ohm with door closed

Resistance **not OK**	Resistance **OK**
■ replace door contact switch or repair open circuit in wiring → End	

Control button for memory function defective

- check voltage between contacts **1** and **8** of brown connector **D** (8-point)
  - must be approximately 12.0 V
- switch control **ON**
- check voltage between brown connector **D** contact **1** (ground) and contact **5**
- push memory control buttons **1, 2, 3, 4** in order
- read voltage after pushing each button
  - must be approximately 12.0 V
- repeat sequence by checking voltage between brown connector **D** contact **1** (ground) and contacts **2, 6, 7** and **3** in order
  - must be approximately 12.0 V

Voltage measurements **not OK**	Voltage measurements **OK**
■ repair open circuit in wiring or ■ replace defective memory control buttons (panel) → End	Go to Ⓐ page 72.20

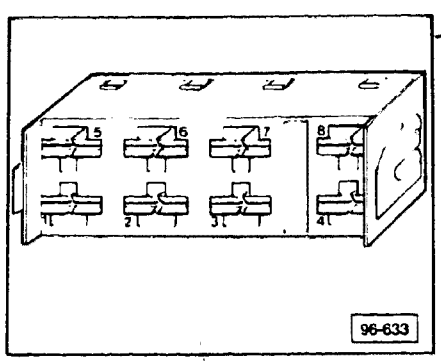

Brown connector D (8-point)

CAUTION

DO NOT damage, enlarge or bend connector terminals or cavities by forcing probes into them when performing electrical checks. Use Connector Test Kit **VW 1594** to make the necessary electrical connections.

cardiagn.com

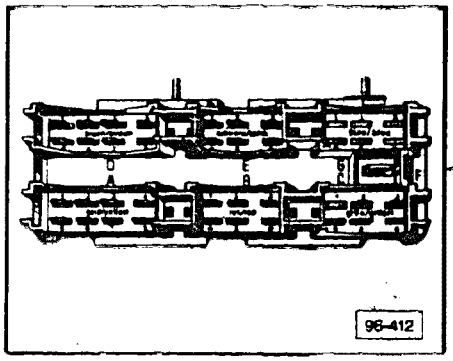

Control unit connectors

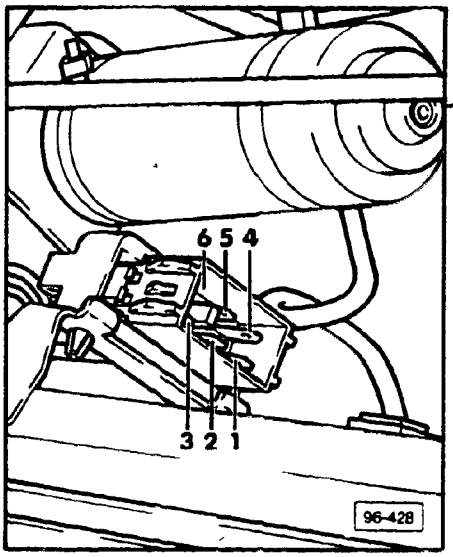

Brown connector on driver's seat (6-point)

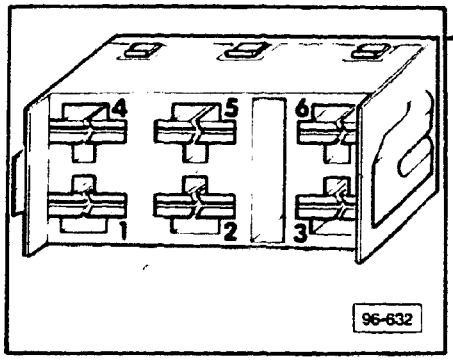

Black connector E (6-point)

Ⓐ

Control unit defective

- replace control unit
- reconnect all connectors to driver's seat
- check seat adjustment operation

Operation **OK**	Operation **not OK**
End	

Sending unit, fore/aft adjustment or front or rear height adjustment defective

- remove black connector **E** (6-point) from control unit
- connect a fused (30 A) external voltage supply to brown (6-point) connector on power seat as follows
  - positive (+) to terminal **2**
  - negative (–) to terminal **5**
- set **US 1119** to 20 K ohm scale and connect to black connector **E** (6-point) as follows
- contacts **2** and **3** to check front height adjustment sender
- contacts **2** and **6** to check rear height adjustment sender
- contacts **2** and **5** to check fore/aft adjustment sender
- operate servo motors for each adjustment using adjustment switches
  - resistance must vary continuously during servo operation

Resistance does not vary in one or more senders	Resistance varies
■ Replace defective sender → End	Go to Ⓐ page 72.21

CAUTION
DO NOT damage, enlarge or bend connector terminals or cavities by forcing probes into them when performing electrical checks. Use Connector Test Kit **VW 1594** to make the necessary electrical connections.

cardiagn.com

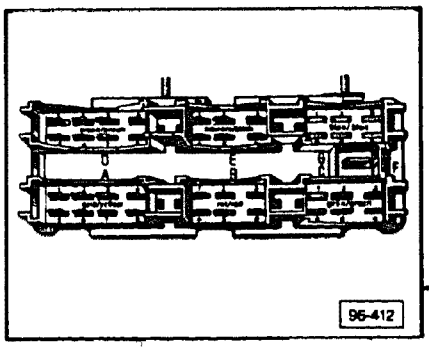

Control unit connectors

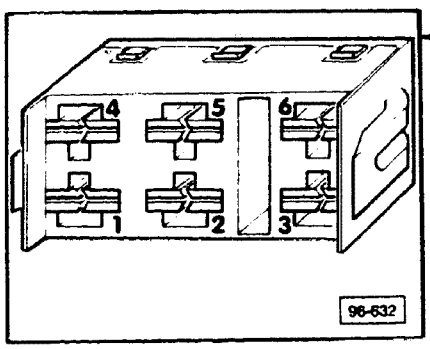

Green connector C (6-point)

CAUTION

DO NOT damage, enlarge or bend connector terminals or cavities by forcing probes into them when performing electrical checks. Use Connector Test Kit **VW 1594** to make the necessary electrical connections.

(A)

Backrest does not adjust

Sender unit for backrest adjustment defective

- remove backrest cover
- disconnect green connector **C** (6-point) from control unit
- connect **US 1119** set to ohm scale between contacts **5** and **3** of green connector **C**
- connect a fused (30 A) external voltage supply alternately between contacts **2** and **4** of green connector **C** — do not recline seat more than 35° rearward
  - resistance must vary continuously during backrest operation

Resistance **does not** vary	Resistance varies
■ replace sender unit for backrest adjustment → End	→ End

cardiagn.com

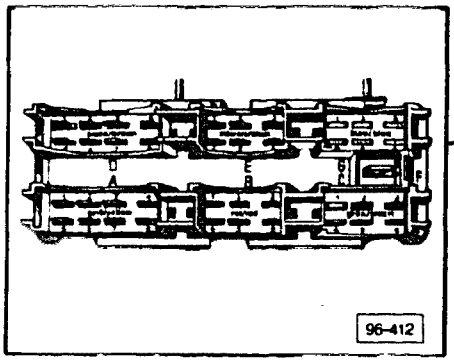

Control unit connectors

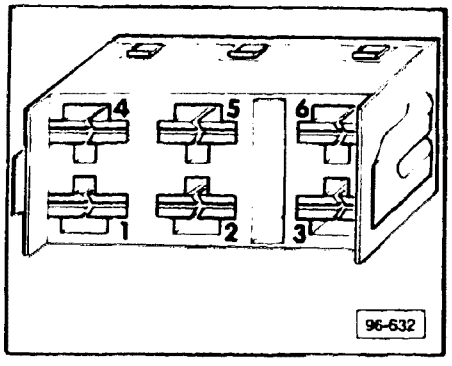

Red connector (6-point)

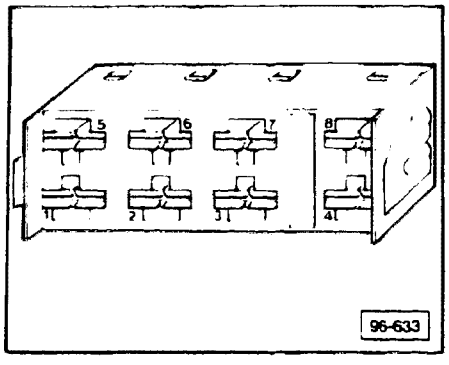

Yellow connector (8-point)

CAUTION

DO NOT damage, enlarge or bend connector terminals or cavities by forcing probes into them when performing electrical checks. Use Connector Test Kit **VW 1594** to make the necessary electrical connections.

(A)

Servo motors defective

- disconnect yellow connector **A**, red connector **B**, green connector **C** and black connector **E** from control unit
- check servo units individually

Front height adjustment servo motor
- apply 12.0 V to contact **1** of red (6-point) connector **B**
- apply 12.0 V to contact **4** of red (6-point) connector **B**

Rear height adjustment servo motor
- apply 12.0 V to contact **3** of yellow (8-point) connector **A**
- apply 12.0 V to contact **7** of yellow (8-point) connector **A**

Fore/aft adjustment servo motor
- apply 12.0 V to contact **1** of yellow (8-point) connector **A**
- apply 12.0 V to contact **5** of yellow (8-point) connector **A**

Backrest adjustment servo motor
- apply 12.0 V to contact **2** of green (6-point) connector **C**
- apply 12.0 V to contact **4** of green (6-point) connector **C**

One or more servo motors do not work	Servo motors work
■ replace defective servo → End	■ repair open circuit to or from control unit or ■ replace control unit → End

cardiagn.com

CAUTION

DO NOT damage, enlarge or bend connector terminals or cavities by forcing probes into them when performing electrical checks. Use Connector Test Kit **VW 1594** to make the necessary electrical connections.

Note

Test all sender units before replacing a defective sender unit.

Backrest must not be reclined more than 35° to rear when checking sender unit for backrest adjustment.

The driver's door must be open when testing the memory function of the power driver's seat.

Driver's seat does not return exactly to memorized position

Fore/aft adjustment sending unit defective

- switch memory control to **ON**
- press button **1** on memory control switches
  - driver's seat moves to position stored in memory
- move seat forward or back to new position
- press memory selector button **4** and memory bar at same time
- alternately press memory buttons **1** and **4**
  - driver's seat must move to stored memory positions

Seat adjustment does not work properly	Seat adjustment works properly
■ repair open circuit from sender to control unit or ■ replace sender → End	

Front height adjustment sender defective

- press button **1** on memory control switches
  - driver's seat moves to position stored in memory
- change front height adjustment
- press memory selector button **4** and memory bar at same time
- alternately press memory buttons **1** and **4**
  - driver's seat must move to stored memory position

Seat does not move to programmed positions	Seat moves to programmed positions
■ repair open circuit from sender to control unit or ■ replace sender → End	Go to Ⓐ page 72.24

cardiagn.com

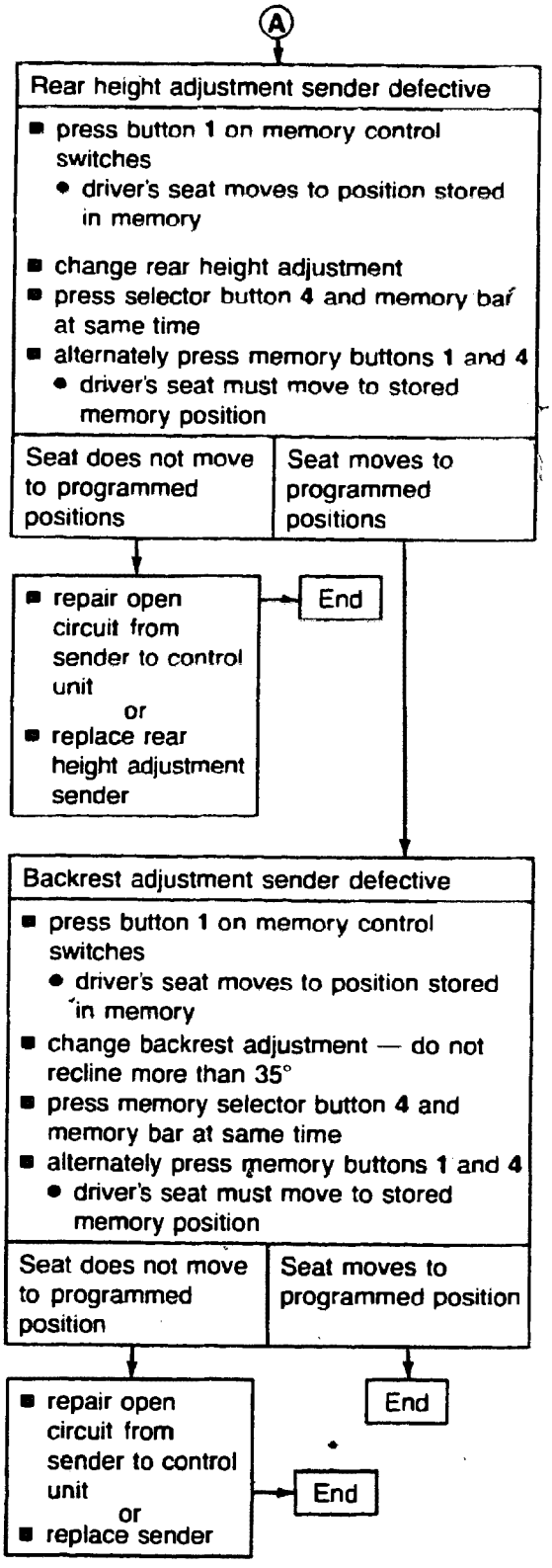

cardiagn.com

CAUTION

DO NOT damage, enlarge or bend connector terminals or cavities by forcing probes into them when performing electrical checks. Use Connector Test Kit **VW 1594** to make the necessary electrical connections.

Front passenger's seat will not adjust with switches

Troubleshooting preparations

- fuse **S23** 30 A in auxiliary relay panel **OK**

Note

When supplying 12.0 V for tests, use jumper wire with 30 amp fuse.

↓

Passenger seat power supply interrupted

- disconnect 6-point connector (brown) on passenger seat
- measure voltage between connector contacts **2** (positive +) and **5** (negative −)
  - must be approximately 12.0V

Voltage **not OK**	Voltage **OK**
■ check wiring according to wiring diagram, repair open circuit → End	■ remove passenger seat

↓

Servo motors defective

- disconnect connectors from all servo motors
- using jumper wire, apply voltage briefly to each servo motor

Servo motors do not work	Servo motors work
■ replace defective servo motor → End	Go to Ⓐ page 72.26

cardiagn.com

CAUTION

DO NOT damage, enlarge or bend connector terminals or cavities by forcing probes into them when performing electrical checks. Use Connector Test Kit **VW 1594** to make the necessary electrical connections.

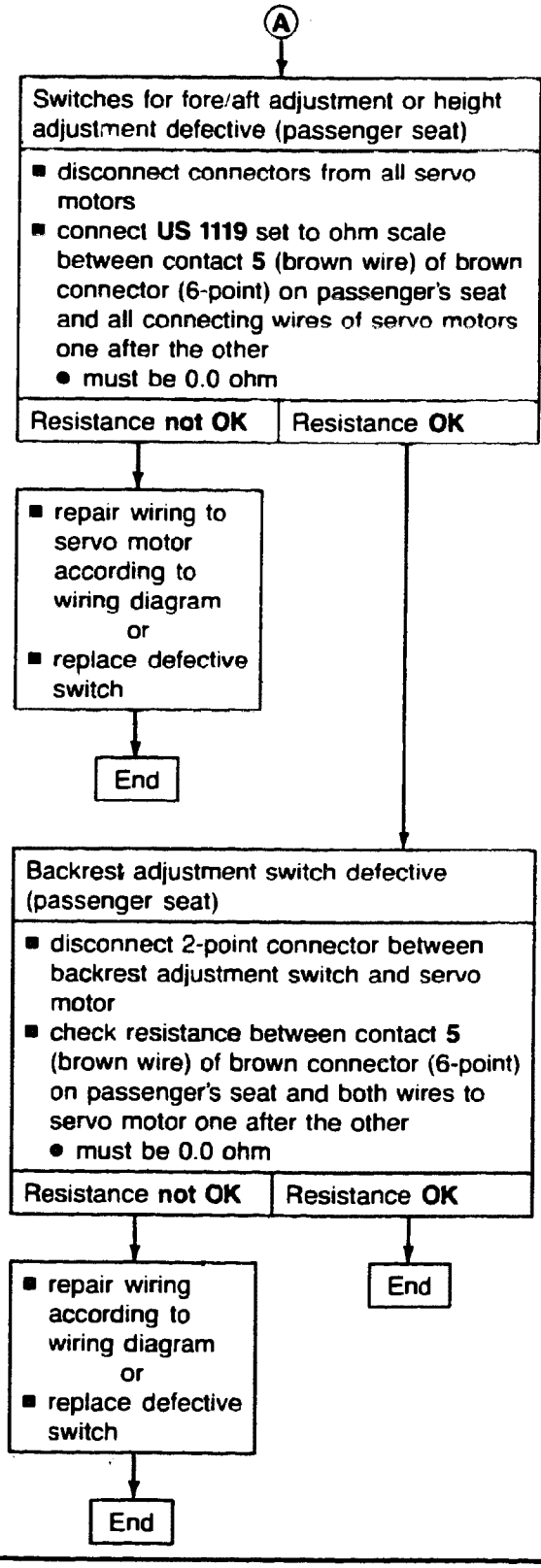

cardiagn.com

CAUTION

DO NOT damage, enlarge or bend connector terminals or cavities by forcing probes into them when performing electrical checks. Use Connector Test Kit **VW 1594** to make the necessary electrical connections.

Note

Perform this check with the driver's seat installed.

Seat belt warning does not function

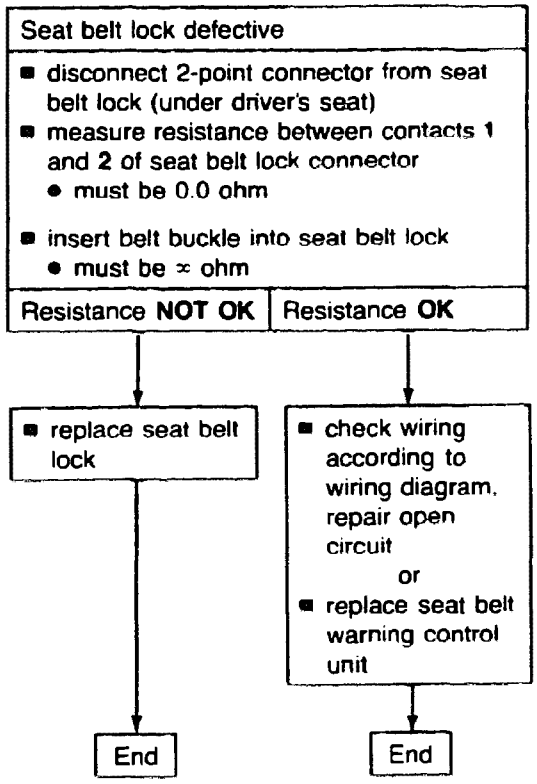

cardiagn.com

Modification of replacement seat frame

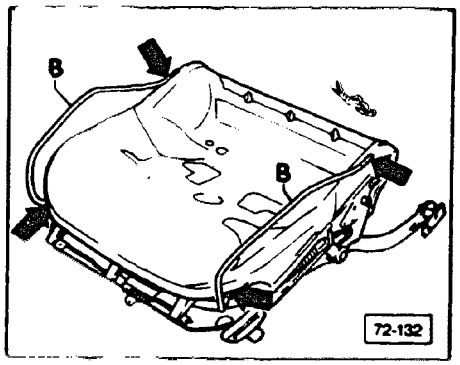

Note

When replacing a front seat, only sport seat version frames will be available as replacement parts.

For cars without sport seats make the following modifications:

- hacksaw off side supports **B** at arrows as close to weld points as possible
- grind down and remove all burrs
  - do not grind into seat frame

> **CAUTION**
>
> Part numbers are for reference only. Always check with your Parts Department for latest information.

- prime deburred points with anti-corrosion primer **ALN 002 003 10** or equivalent

cardiagn.com

Index

90/90

Heated seat elements
- removing/installing (w/power seats) **74.9**
- removing/installing (w/o power seats) **74.2**

Coupe

Heated seat elements
- removing/installing (w/power seats) **74.24**
- removing/installing (w/o power seats) **74.17**

cardiagn.com

Heated seat elements, removing/installing

(Vehicles without power seats)

Note

Always refer to appropriate wiring diagram when performing electrical repairs.

- disconnect battery ground strap

Seat element, removing

- remove screw (**arrow**)
- take off seat track covers

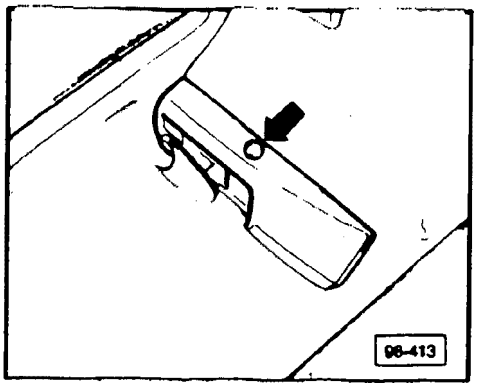

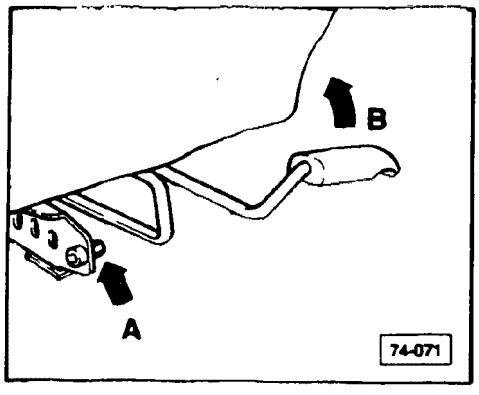

- remove bolt (**arrow A**)
- pull up lever (**arrow B**), carefully remove seat from tracks toward rear
  - do not damage carpeting
- disconnect electrical wiring to seat, remove seat from vehicle
- disconnect heated seat element from seat frame

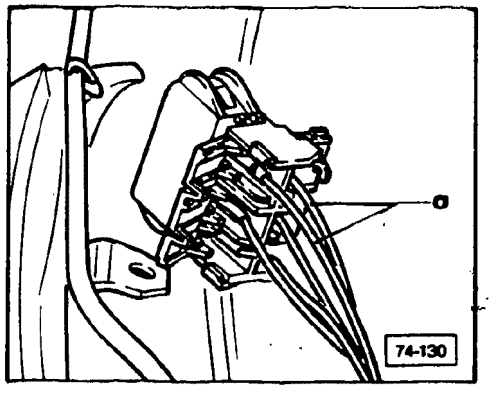

- open rear connector cover, pull off connector **a** for seatback element
  - terminals **3, 6**

cardiagn.com

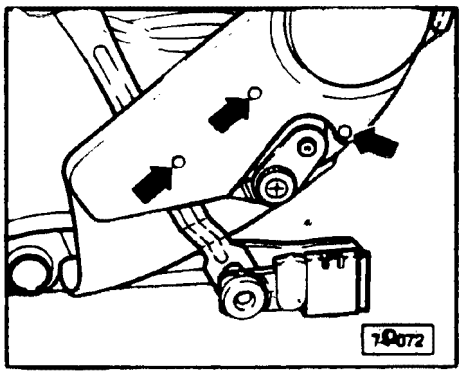

- drive in retaining pins on both sides (**arrows**), and remove trim

Note

Retaining pins are of different lengths

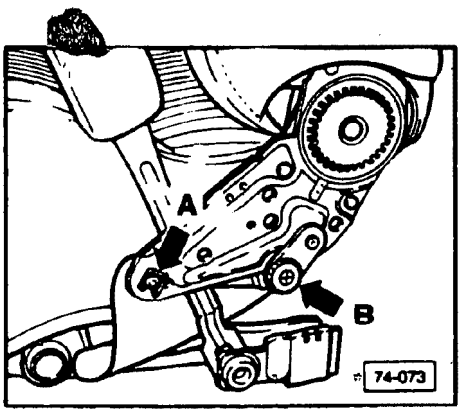

- remove lock washers (**arrow A**) on both sides
- unscrew mounting bolts from both sides (**arrow B**)

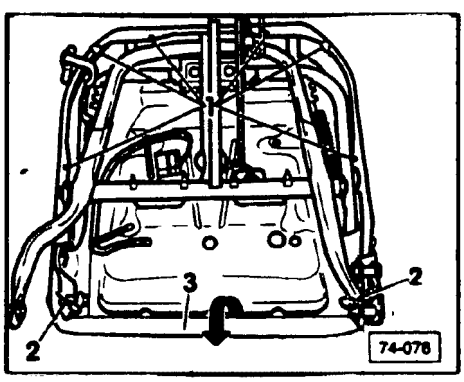

- separate and remove seat backrest from seat frame
- unhook tension wire **2** on both sides
- pry off cover reinforcement **3**
- bend open upholstery hooks **1**
- unhook and remove seat cover
- fold back cover

CAUTION

Part numbers are for reference only. Always check with your Parts Department for latest parts information.

cardiagn.com

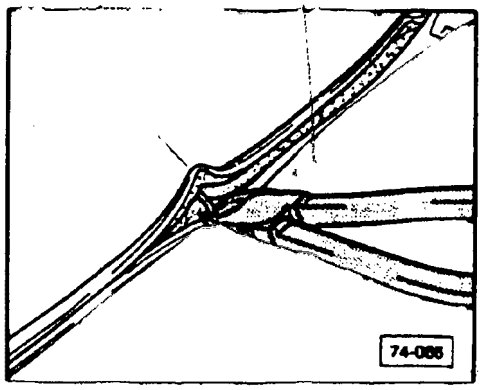

- but clips (as shown)

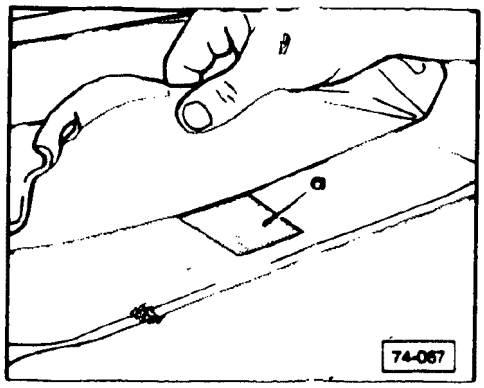

- carefully remove seat element from upholstery
  - adhesive strip **a** remains on cushion
  - warm adhesive strip with hot air blower to aid in removal of heat element

Note

Heating element is bonded to cushion as of 9/89

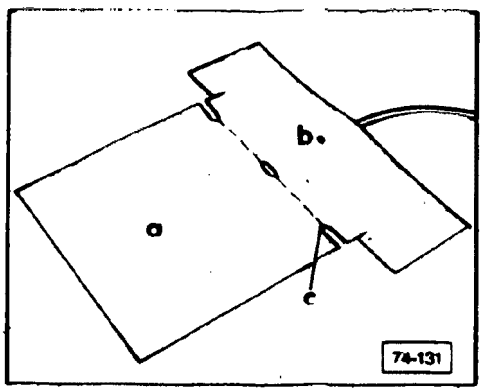

- cut through old heating element at **c**
- remove section **b** with connector wire
  - part **a** remains on cushion

Seat element, installing

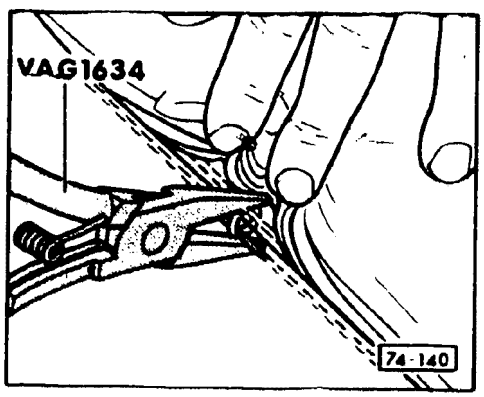

CAUTION

Part numbers are for reference only. Always check with your Parts Department for latest parts information.

- install replacement element over old element with universal adhesive Part No. **D 001 200** or equivalent
- use upholstery pliers **V.A.G 1634** or equivalent to install clips

cardiagn.com

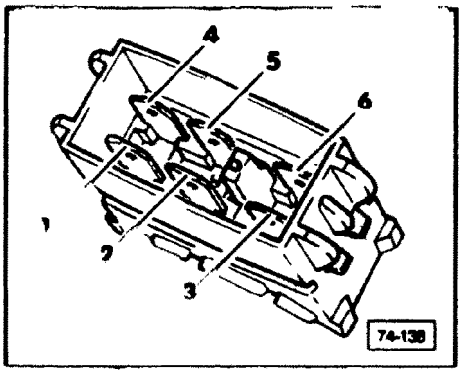

Seat connector, contact locations

1 — seat heat element 1 0 mm² (wire diameter)
2 — temperature sensor 0 5 mm² (wire diameter)
3 — seatback heat element
4 — temperature sensor 0 5 mm² (wire diameter)
5 — seat heat element 1 0 mm² (wire diameter)
6 — seatback heat element

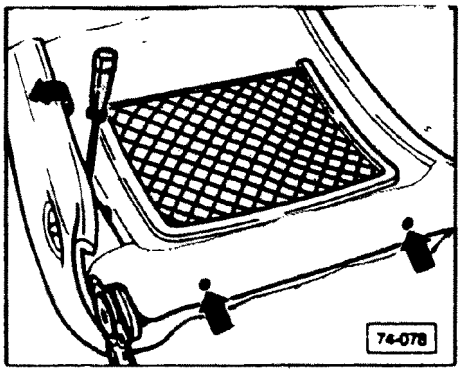

Seatback element, removing

- remove seat from vehicle
- remove seatback
- unscrew trim mounting bolts for trim (arrows)
- pry out seatback cover, as shown
- remove trim from below

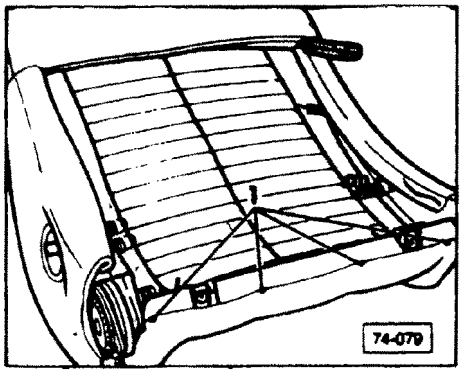

Standard seatback

- remove headrest
- pry off adjustment knob trim, remove screw
- take off adjustment knob
- loosen cover from seatback frame
- carefully pry off cover from top with screwdriver
  - bend open hooks 1

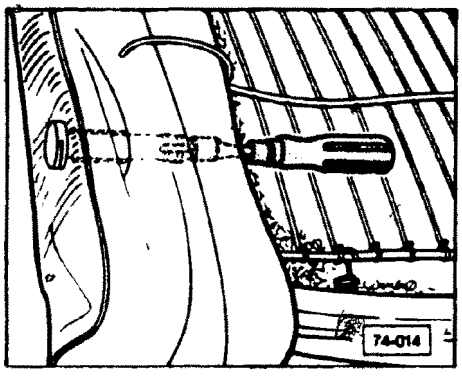

- press out headrest guides with 10 mm (25/64 in) wrench

cardiagn.com

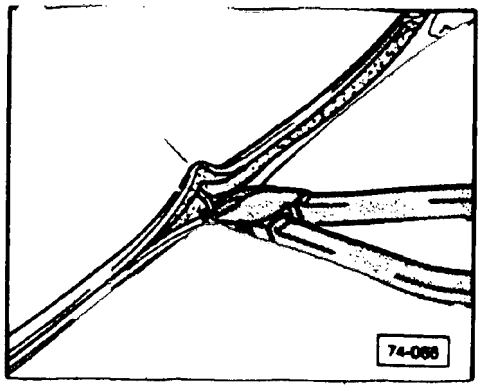

- turn cover over, cut through clips (as shown)
- remove cover element with connector

Note

Heating element is now bonded to cushion as of 9/89

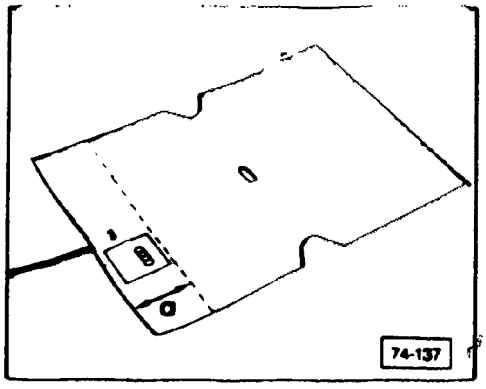

- cut through bonded element as shown
  - approximately 8.0 cm (approximately 3.1 in.)
- remove section with electrical wires

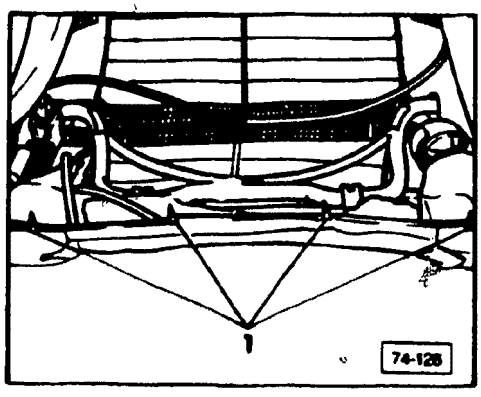

Sport seatback

- bend open upholstery hooks 1, unhook cover
- pull up seatback center portion
- loosen cover from inner material layer
  - mark ends with felt tip pen for adhesive strip
- remove intermediate layer

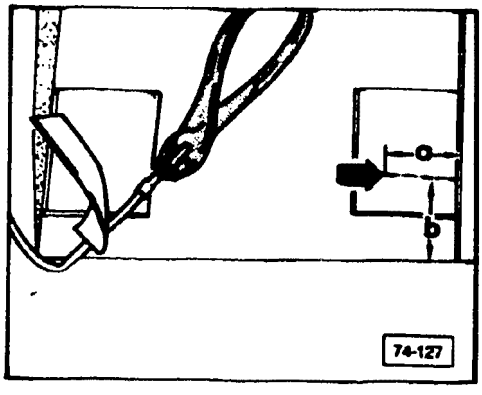

- cut electrical wire to defective element
- cut slit into foam as shown
  - a = approximately 4.0 cm (approximately 1.6 in.)
  - b = approximately 6.0 cm (approximately 2.3 in.)

cardiagn.com

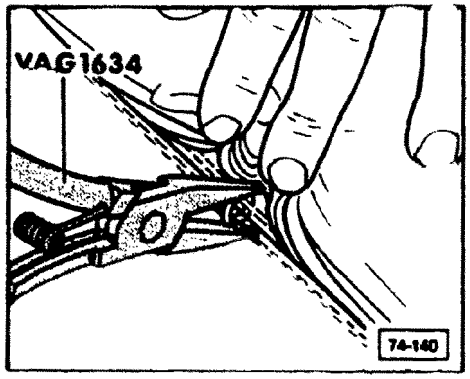

Seatback elements, installing

Standard seatback

- bond replacement element over remaining old element with universal adhesive Part No. **D 001 200** or equivalent
- use upholstery pliers **VAG 1634** or equivalent to install clips

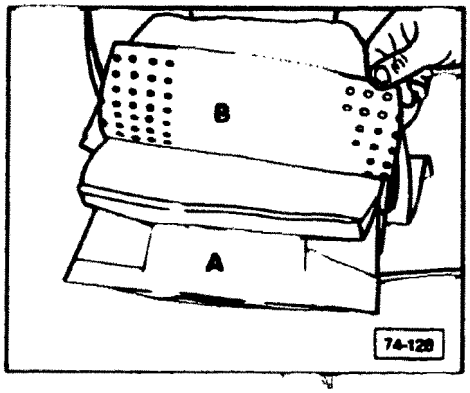

Sport seatback

- remove protective film from replacement element **B**
- install element **B** on foam **A**
  - keep wrinkle free
  - repeat for rest of element

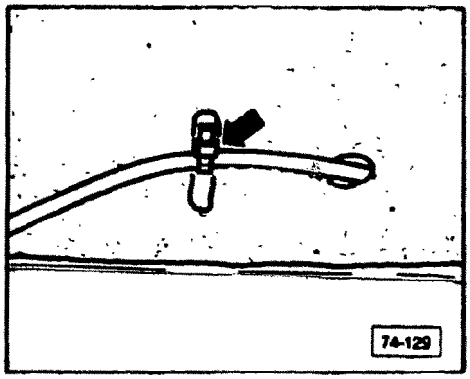

- route replacement element connector wire through slit and secure with tie wrap

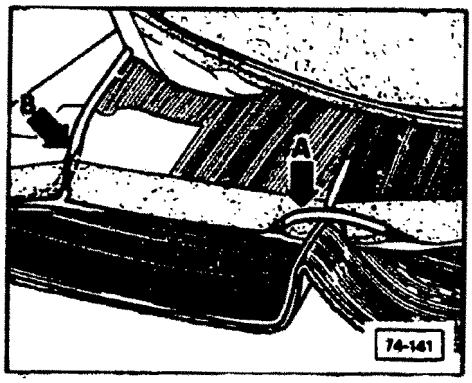

Note

DO NOT bend wire **A**, cable guide **B**

cardiagn.com

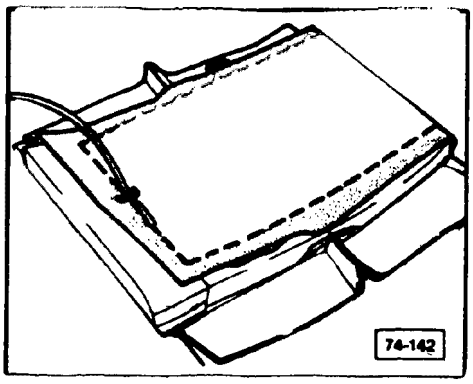

- glue adhesive strip onto intermediate layer as marked
- padded side of adhesive strip is glued on ends of inside of cover material

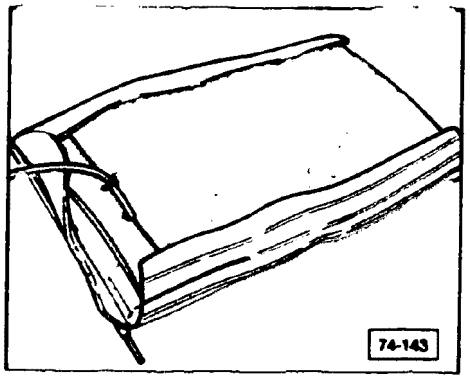

- ensure seat cover is placed evenly pulled tight and secured to adhesive strip

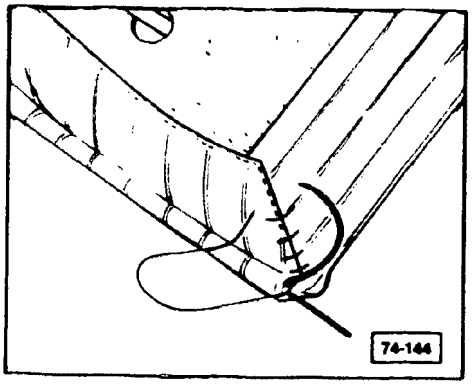

- sew cover corners by hand

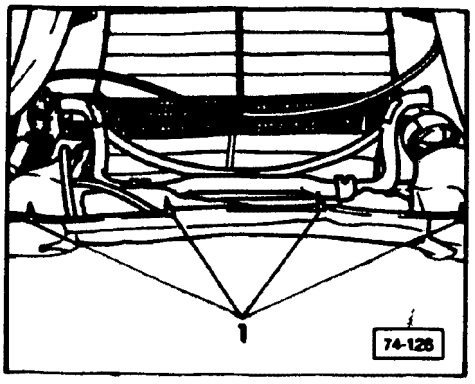

- turn seatback center section over
- bend over hooks 1 to secure

- reinstall all other components in reverse order of removal
- reconnect battery ground strap
- check seat for proper function

cardiagn.com

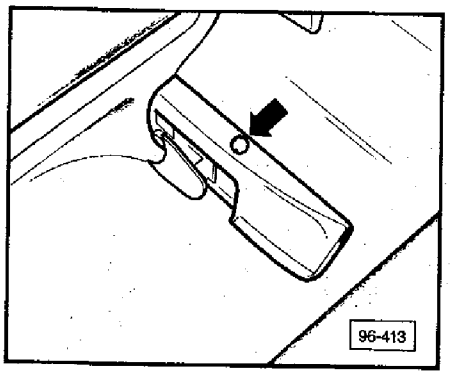

Heated seat element, removing/ installing

(Vehicles with power seats)

Seat element, removing

- remove cap and screw (**arrow**)
- take off seat track covers
- remove covers from front

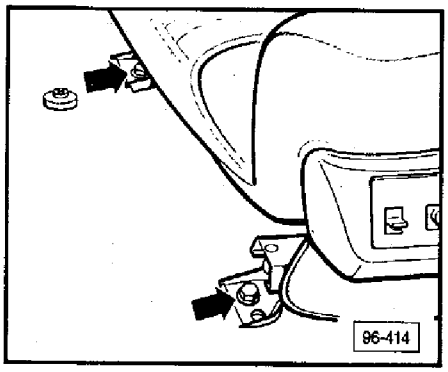

- move seat fully to rear, then raise fully at front and remove bolts (**arrows**)
- disconnect battery ground strap

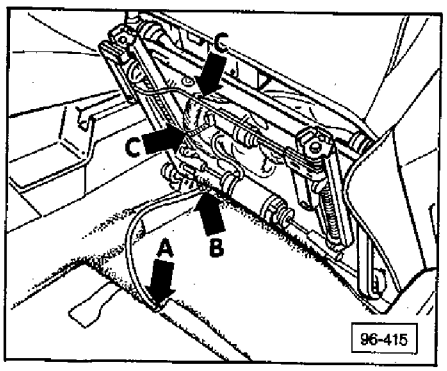

- lift seat at rear, cut off tie wrap **A**
- push seat to rear and lean back
  - take care not to damage carpeting
- open cable mounting **B**, cut tie wraps **C**
- disconnect plug connectors
- remove seat from vehicle
- disconnect **6** point connector from driver's seat control unit
  - **2** point connector on passenger seat
- remove connector for heated seat from seat frame

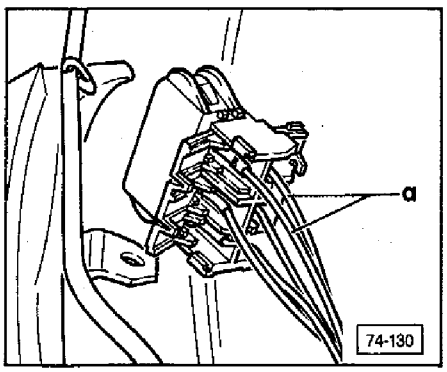

- open flaps at rear and remove wires **a** for seatback heat element
  - contacts **3, 6**

cardiagn.com

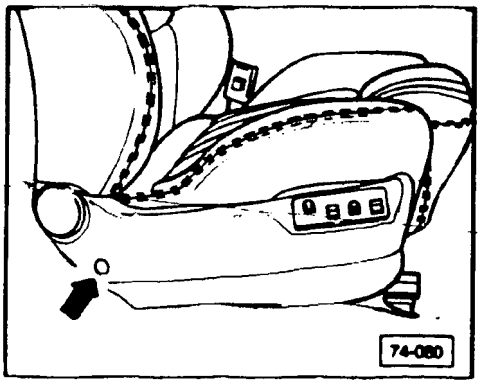

- pry off cover cap (arrow), unscrew mounting bolts

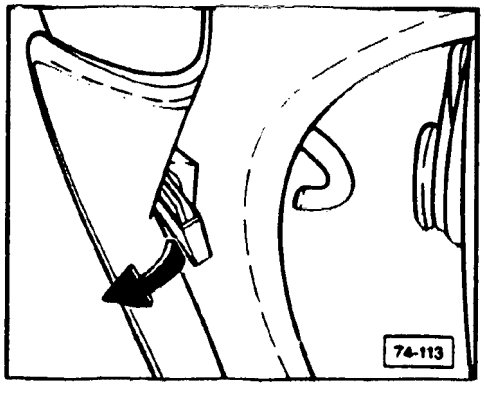

- pry out retaining pin
- unhook side trim from switch trim on seat frame and remove

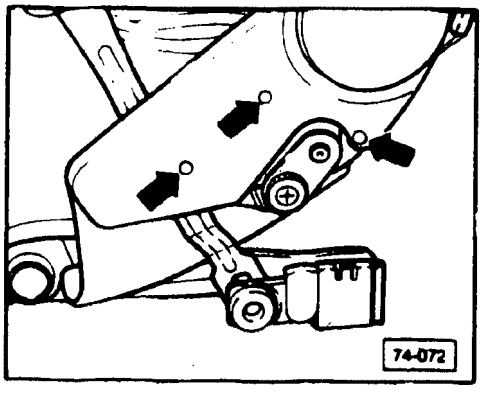

- push pins in from opposite side (**arrows**)
  - pins are of different length

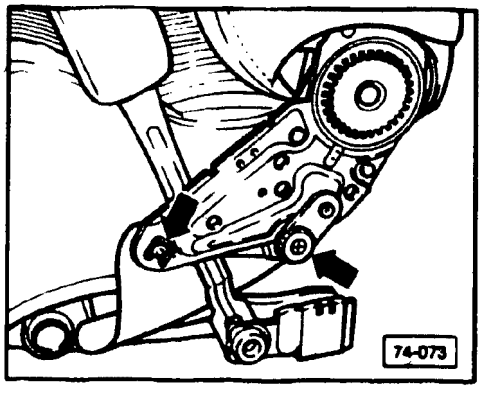

- remove left/right screws, washers from stop pins (**arrows**)
- pull apart seatback mounting, remove seat back

cardiagn.com

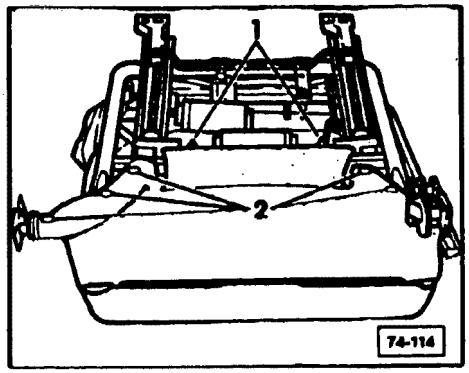

- bend open upholstery hooks 1, unhook lower upholstery trim
- pry out clips 2

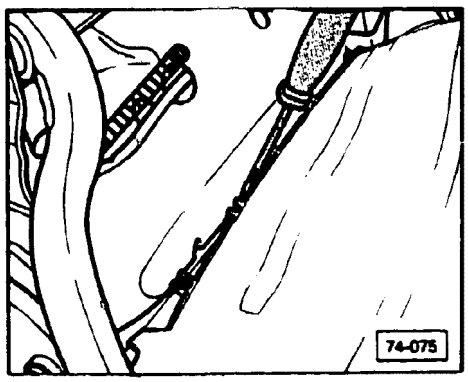

- fold over trim material
- carefully pry off mounting clips with screwdriver
- remove trim from bottom

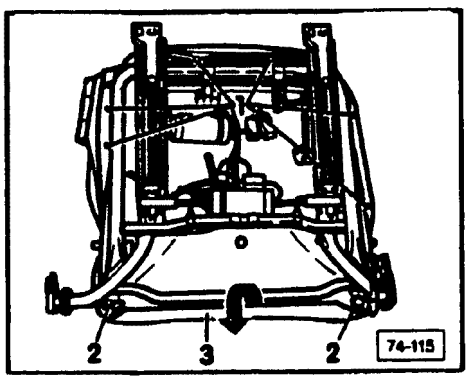

- bend open wire 2 on both sides
- pry out clips 1
- pry off cover reinforcement 3
- fold over seat cover

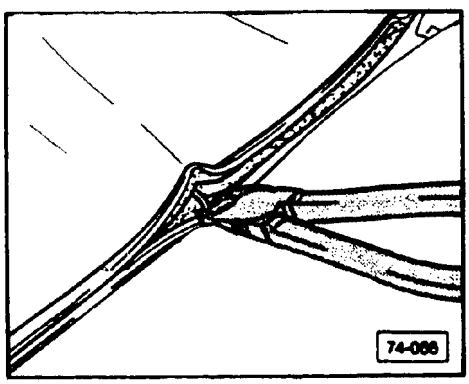

- cut off clips and remove seat cover

cardiagn.com

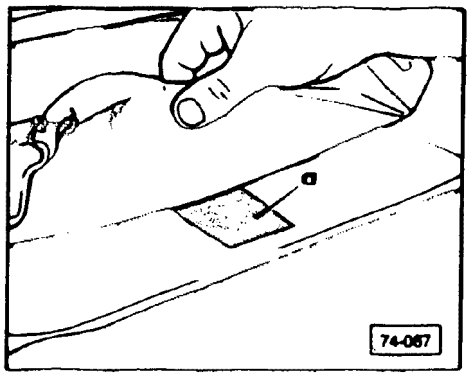

- remove heat element with connector from cushion
  - adhesive strip **a** must remain on cushion
  - heat **a** with hot air blower if necessary to facilitate removal of heat element

Note

Heating element is bonded to cushion as of 9/89

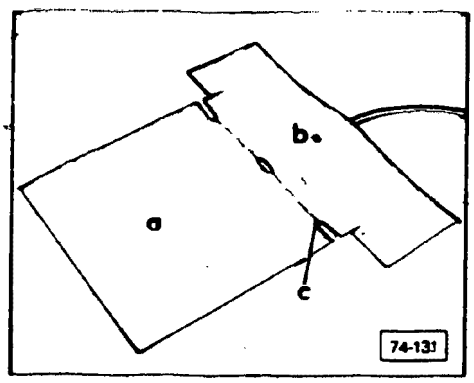

- cut through heating element at **c**
- remove section **b** with electrical connector
  - section **a** remains on cushion

Seat element, installing

- bond replacement element over remaining portion of old element with universal adhesive Part No. **D 001 200** or equivalent

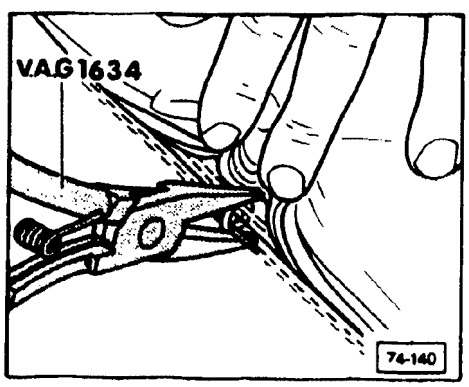

- use upholstery pliers **VAG 1634** or equivalent to install clips

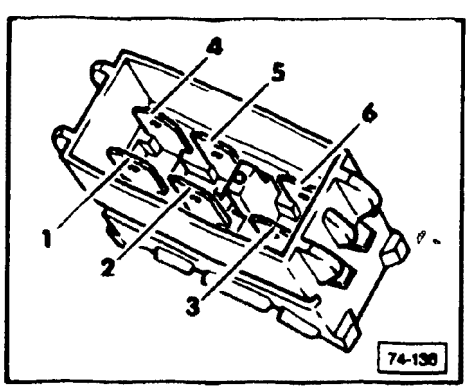

Seat connector, contact locations

1 — seat heat element 1.0 mm² (wire diameter)
2 — temperature sensor 0.5 mm² (wire diameter)
3 — seatback heat element
4 — temperature sensor 0.5 mm² (wire diameter)
5 — seat heat element 1.0 mm² (wire diameter)
6 — seatback heat element

cardiagn.com

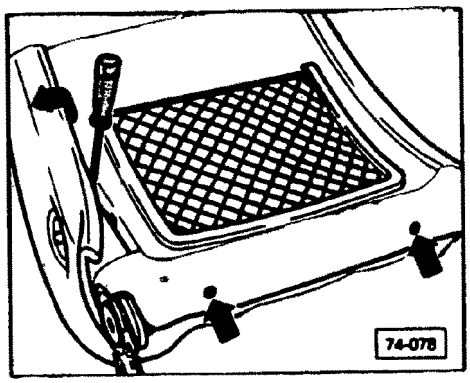

Seatback element, removing

- remove seat from vehicle
- remove seatback
- unscrew trim mounting bolts for trim (**arrows**)
- pry out seatback cover (as shown)
- remove trim from below

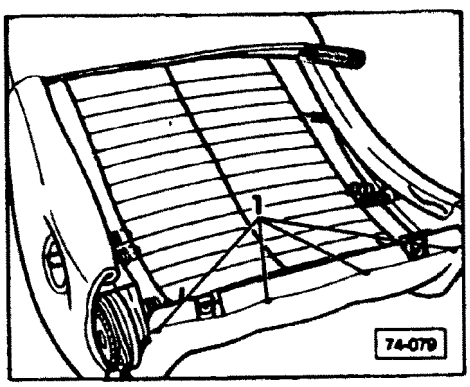

Standard seatback

- remove headrest
- pry off adjustment knob trim, remove screw
- take off adjustment knob
- loosen cover from seatback frame
- carefully pry off cover from top with screwdriver
  - bend open hooks 1

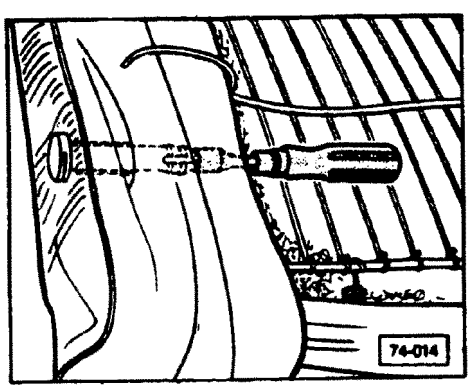

- press out headrest guides with 10 mm (25/64 in.) wrench

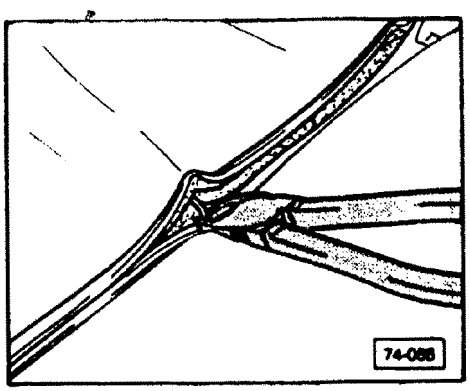

- turn cover over, cut through clips (as shown)
- remove cover, element with connector

Note

Heating element is now bonded to cushion as of 9/89.

cardiagn.com

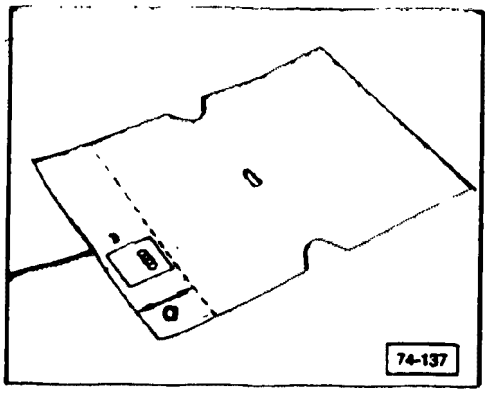

- cut glued backrest element as shown
  - a – approximately 8.0 cm (approximately 3.1 in.)
- remove section with electrical wires

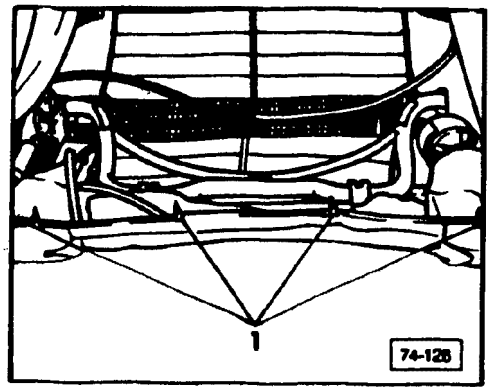

Sport seatback

- bend open upholstery hooks 1, unhook cover
- raise seatback center portion
- loosen cover from inner material layer
  - mark ends with felt tip pen for adhesive strip
- remove intermediate layer

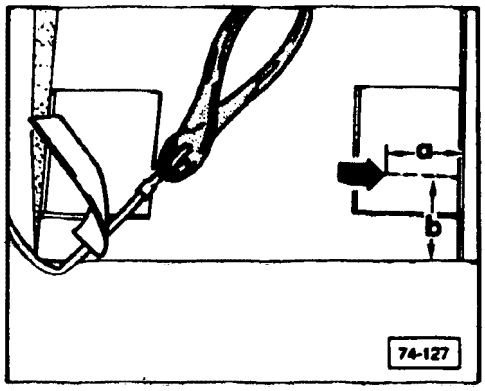

- cut electrical wire to defective element
- cut slit on foam as shown
  - a — approximately 4.0 cm (approximately 1.6 in.)
  - b — approximately 6.0 cm (approximately 2.3 in.)

cardiagn.com

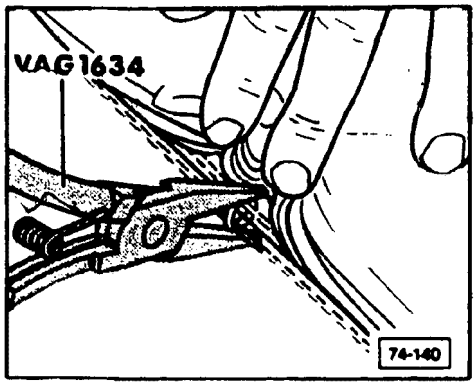

Seatback element, installing

Standard seatback

- bond replacement element over remaining old element
- use upholstery pliers **VAG 1634** or equivalent to install clips

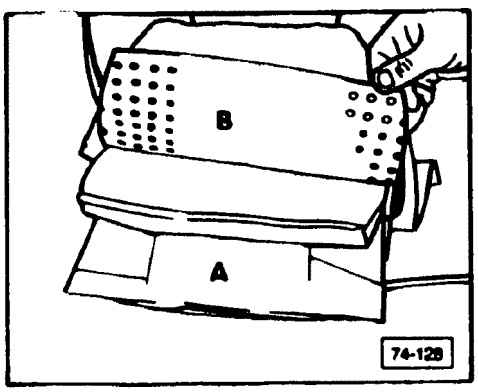

Sport seatback

- remove protective film from replacement element **B**
- install replacement element onto foam **A**
  - keep free from wrinkles
  - repeat for rest of element

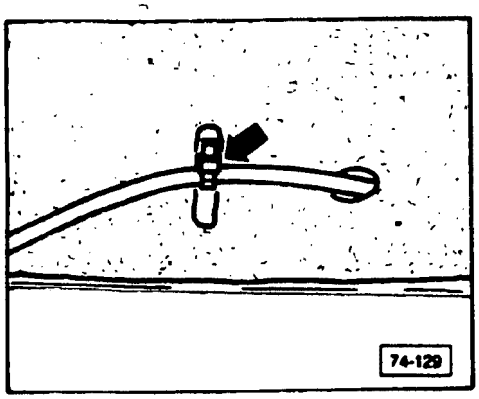

- route and fasten new element through slit (**arrow**) and secure with tie wrap

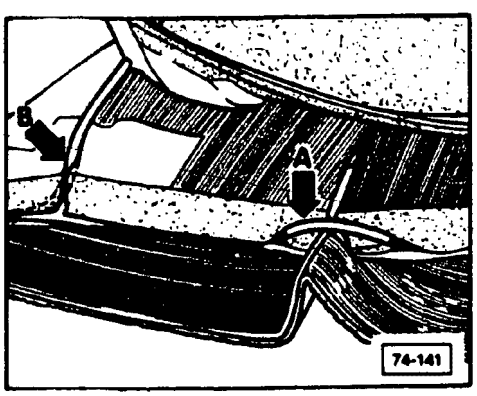

Note

Do not bend wire **A**, cable guide **B**

cardiagn.com

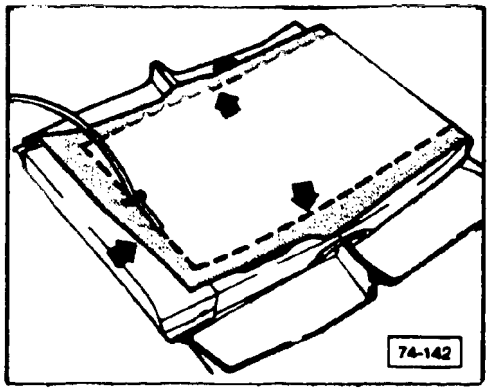

- glue velcro tape onto intermediate layer as marked (**arrows**)
- padded side of velcro tape is glued on ends of inside of cover material

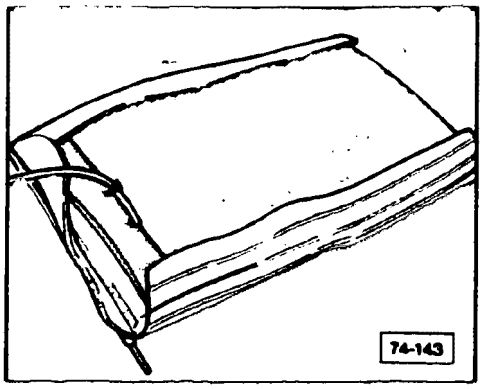

- ensure seat cover is placed evenly, tightly and secured to velcro tape

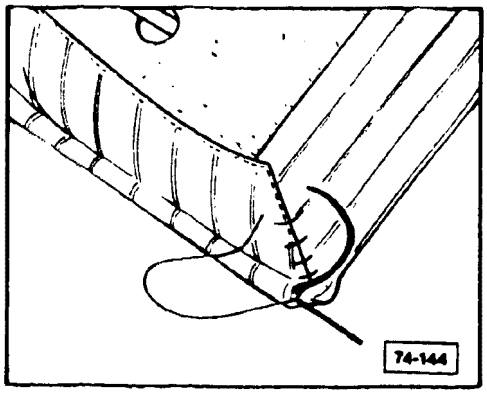

- sew cover corners by hand

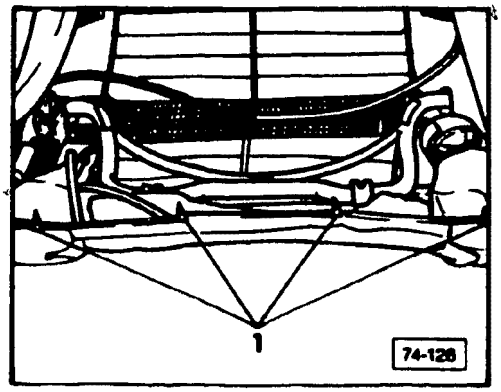

- turn over seatback center section, hook and bend over hooks 1
- reinstall all other components in reverse order of removal

- reconnect battery ground strap
- check seat for proper function

cardiagn.com

Heated seat elements, removing/ installing

(Vehicles without power seats)

Note

Always refer to appropriate wiring diagram when performing electrical repairs

- disconnect battery ground strap

Seat element, removing

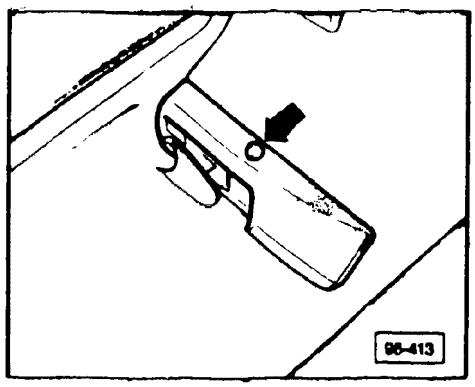

- remove screw (**arrow**)
- take off seat track covers

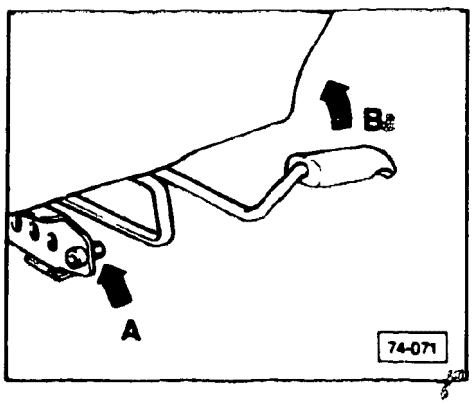

- remove bolt (**arrow A**)
- pull up lever (**arrow B**), carefully remove seat from tracks toward rear
  - do not damage carpeting
- disconnect electrical wiring to seat, remove seat from vehicle
- disconnect heated seat element from seat frame

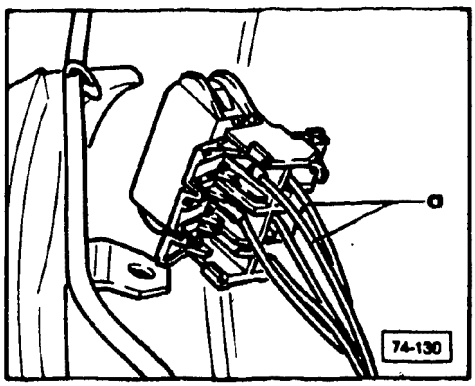

- open rear connector cover, pull off connector **a** for seatback element
  - terminals **3, 6**

cardiagn.com

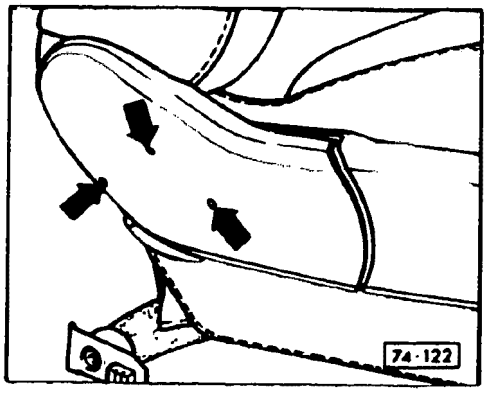

- knock through retaining pins (**arrows**) approximately 5.0 mm (13/64 inch) with punch on both sides
- remove trim

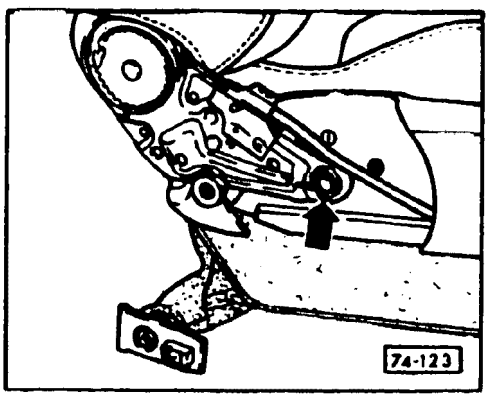

- remove retaining clip (**arrow**) from both sides
- lift lever on side, tilt backrest forward
- pull backrest sides apart, remove backrest

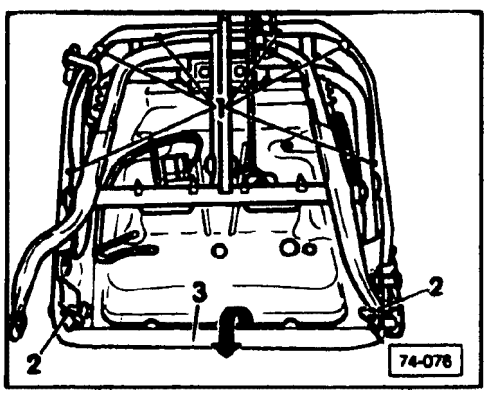

- separate and remove seat backrest from seat frame
- remove stop pin retaining screws, both sides
- unhook tension wire **2** on both sides
- pry off cover reinforcement **3**
- bend open upholstery hooks **1**
- unhook and remove seat cover
- fold back cover

cardiagn.com

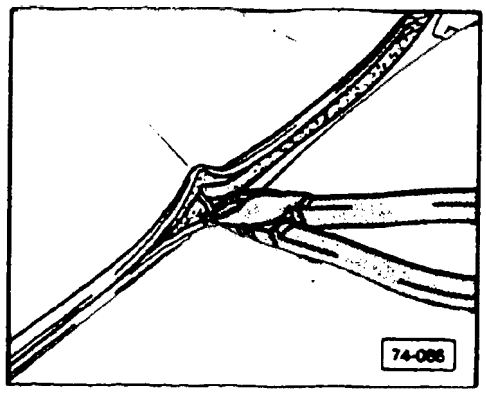

- cut clips (as shown)

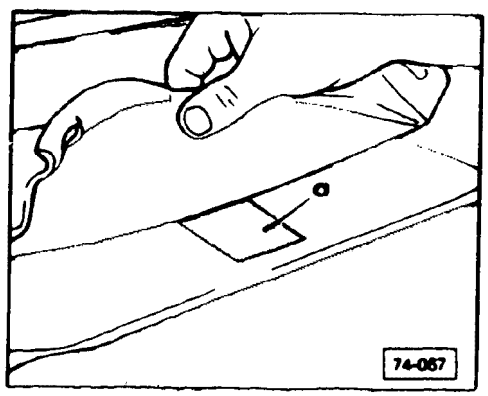

- carefully remove seat element from upholstery
  - adhesive strip **a** remains on cushion
  - warm adhesive strip with hot air blower to aid in removal of heat element
- remove element with connector

Note

Heating element is bonded to cushion as of 9/89

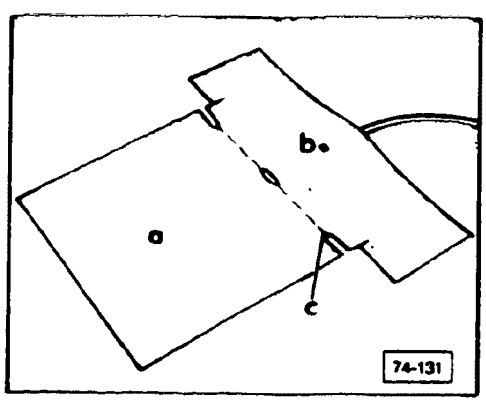

- cut through old heating element at **c**
- remove section **b** with connector wire
  - part **a** remains on cushion

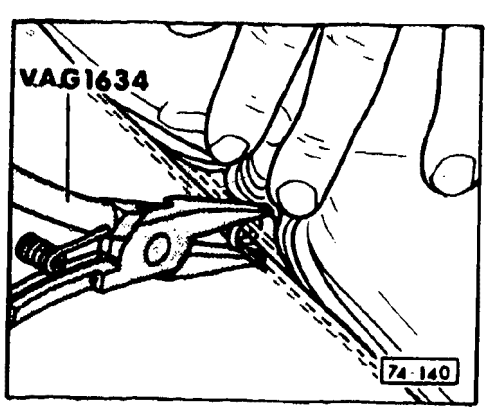

Seat element, installing

> **CAUTION**
>
> Part numbers are for reference only. Always check with your Parts Department for latest parts information.

- install replacement element over old element with universal adhesive Part No. **D 001 200** or equivalent
- use upholstery pliers **VAG 1634** or equivalent to install clips

cardiagn.com

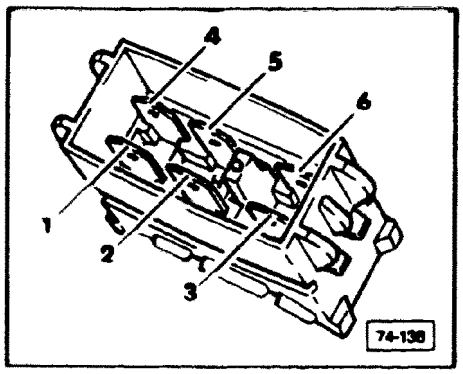

Seat connector, contact locations

1 — seat heat element 1.0 mm² (wire diameter)
2 — temperature sensor 0.5 mm² (wire diameter)
3 — seatback heat element
4 — temperature sensor 0.5 mm² (wire diameter)
5 — seat heat element 1.0 mm² (wire diameter)
6 — seatback heat element

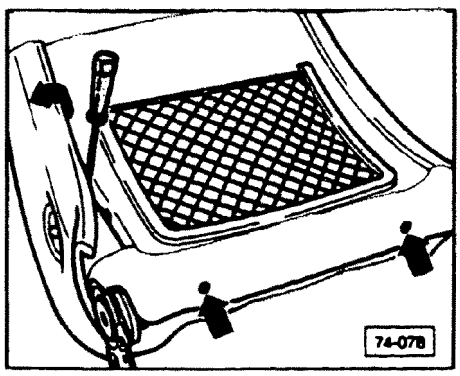

Seatback element, removing

- remove seat from vehicle
- remove seatback
- unscrew trim mounting bolts for trim (**arrows**)
- pry out seatback cover, as shown
- remove trim from below

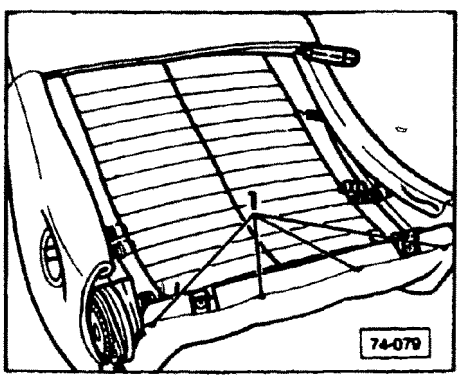

Standard seatback

- remove headrest
- pry off adjustment knob trim, remove screw
- take off adjustment knob
- loosen cover from seatback frame
- carefully pry off cover from top with screwdriver
  - bend open hooks 1

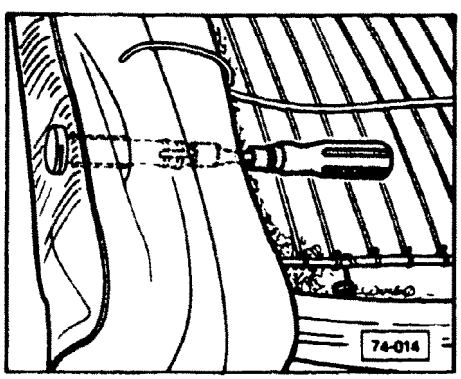

- press out headrest guides with 10 mm (25/64 in.) wrench

cardiagn.com

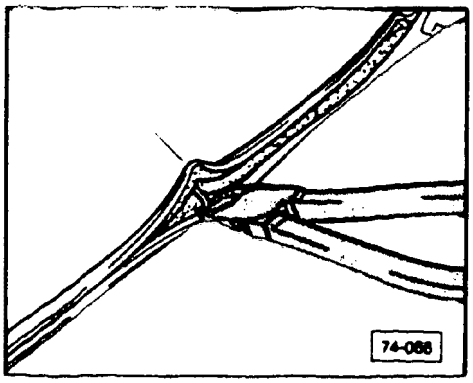

- turn cover over, cut through clips (as shown)
- remove cover, element with connector

Note

Heating element is now bonded to cushion as of 9/89

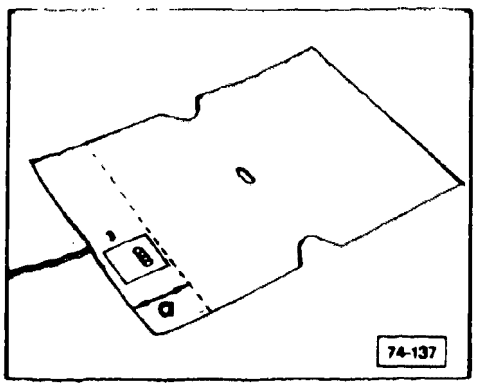

- cut through bonded element as shown
  a – approximately 8.0 cm (approximately 3.1 in.)
- remove section a with electrical wires

Sport seatback

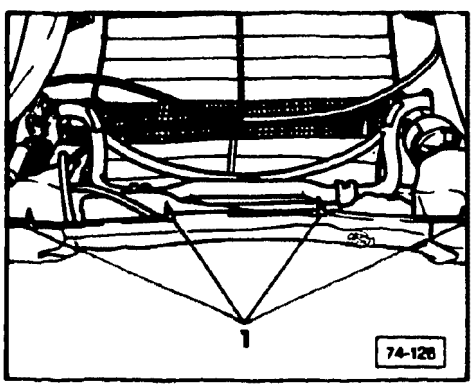

- bend open upholstery hooks 1, unhook cover
- pull up seatback center portion
- loosen cover from inner material layer
  - mark ends with felt tip pen for adhesive strip
- remove intermediate layer

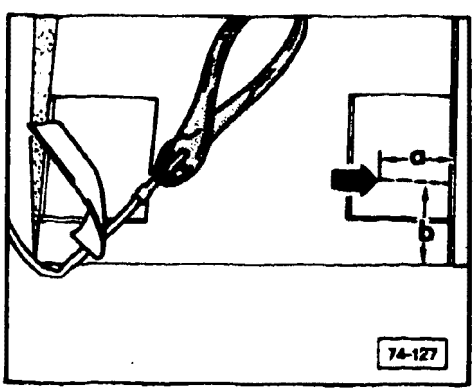

- cut electrical wire to defective element
- cut slit into foam as shown
  a = approximately 4.0 cm (approximately 1.6 in.)
  b = approximately 6.0 cm (approximately 2.3 in.)

cardiagn.com

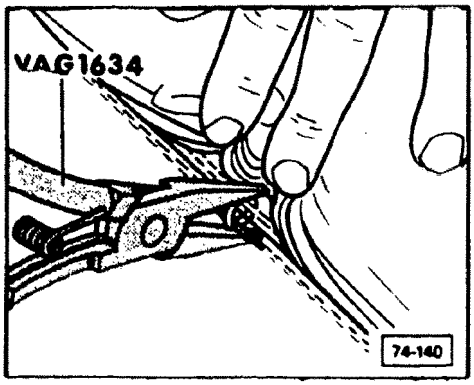

Seatback elements, Installing

Standard seatback

- bond replacement element over remaining old element
- use upholstery pliers **VAG 1634** or equivalent to install clips

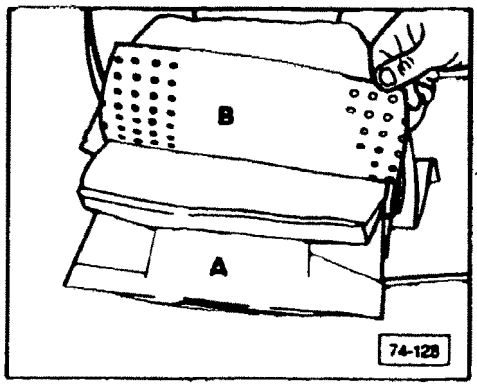

Sport seatback

- remove protective film from replacement element **B**
- install element **B** on foam **A**
  - keep wrinkle free
  - repeat for rest of element

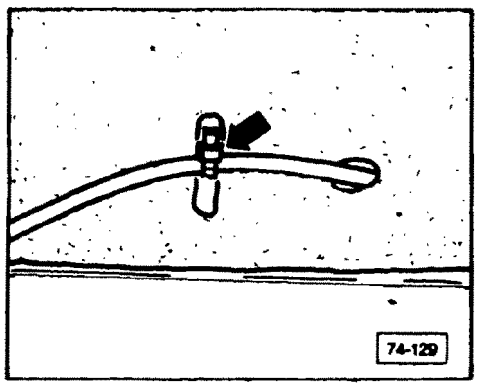

- route replacement element connector wire through slit and secure with tie wrap

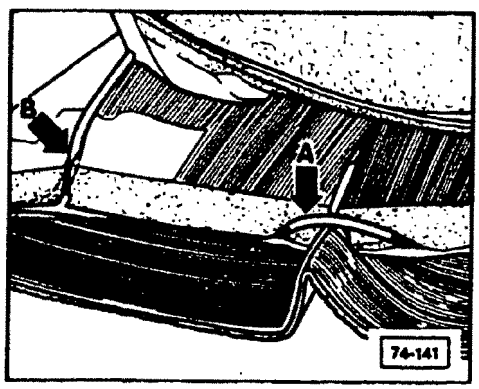

Note

DO NOT bend wire **A**, cable guide **B**.

cardiagn.com

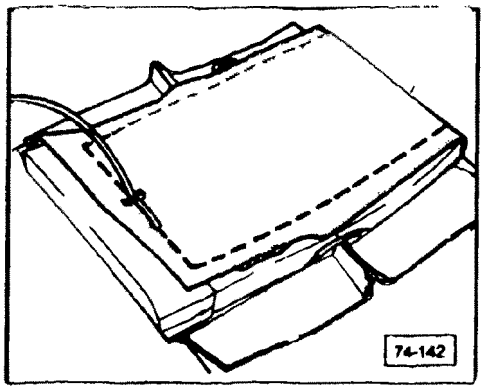

- glue velcro tape onto intermediate layer as marked
- padded side of velcro tape is glued on ends of inside of cover material

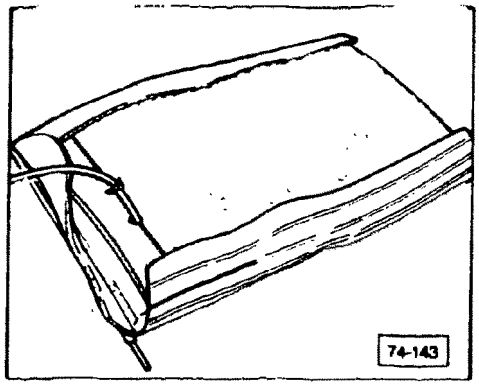

- ensure seat cover is placed evenly, pulled tight and secured to velcro tape

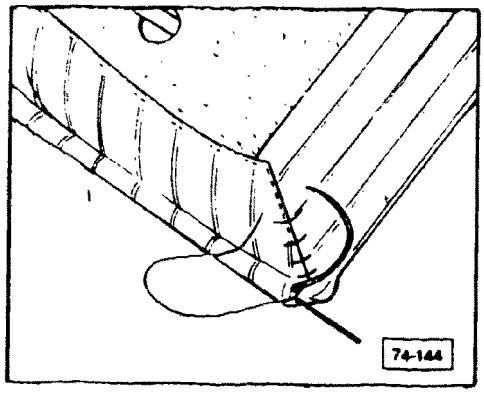

- sew cover corners by hand

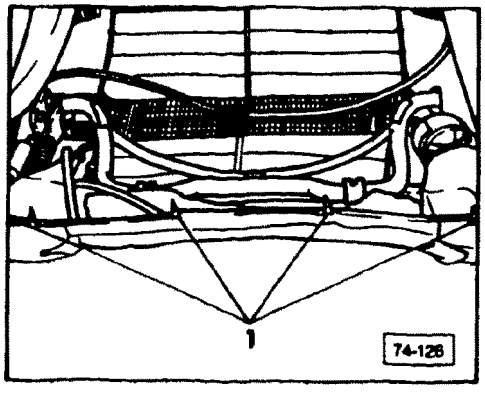

- turn seatback center section over, hook
- bend over hooks 1 to secure
- reinstall all other components in reverse order of removal
- reconnect battery ground strap
- check seat for proper function

cardiagn.com

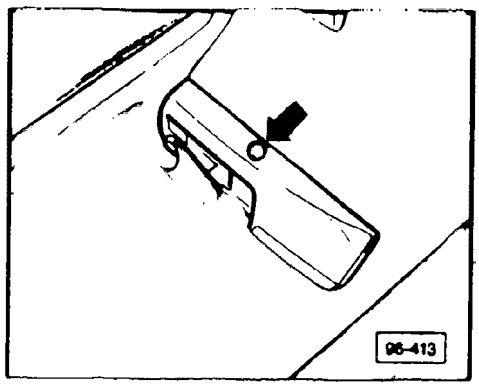

Heated seat element, removing/installing

(Vehicles with power seats)

Seat element, removing

- remove cap and screw (arrow)
- take off seat track covers
- remove covers from front

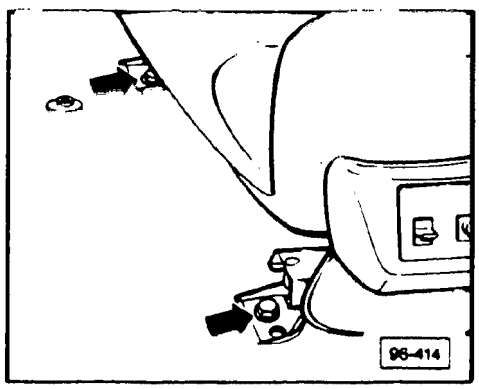

- move seat fully to rear, then raise fully at front and remove bolts (**arrows**)
- disconnect battery ground strap

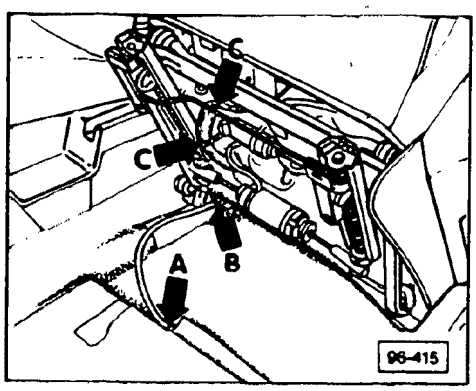

- lift seat at rear, cut off tie wrap **A**
- push seat to rear and lean back
  - take care not to damage carpeting
- open cable mounting **B**, cut tie wraps **C**
- disconnect plug connectors
- remove seat from vehicle

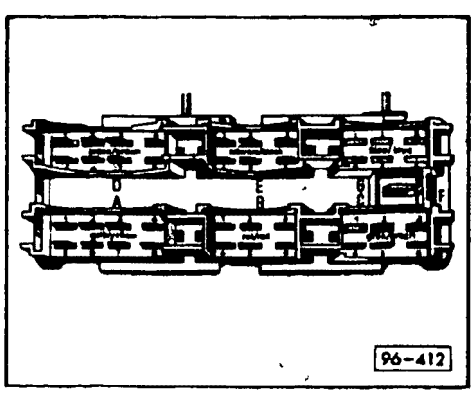

- disconnect **6** point connector from driver's seat control unit
  - **2** point connector on passenger seat
- remove connector for heated seat from seat frame

cardiagn.com

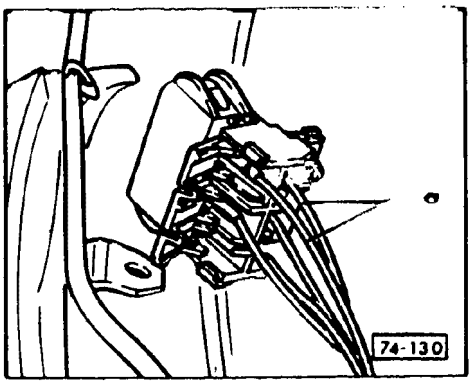

- open flaps at rear and remove wires a for seatback heat element
  - contacts 3, 6

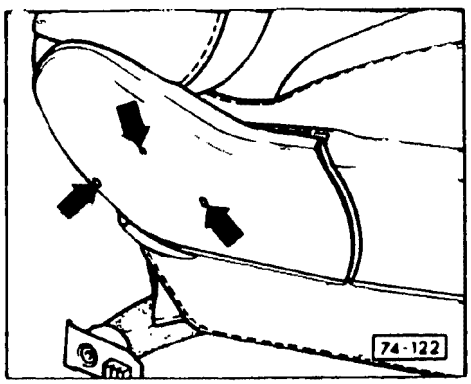

- knock through retaining pins (**arrows**) approximately 5.0 mm (13/64 in.) with punch on both sides
- remove trim

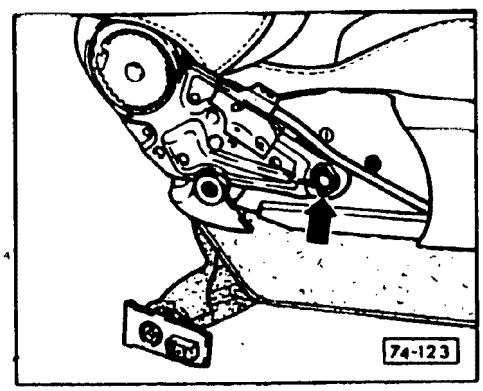

- remove retaining clip (**arrow**) from both sides
- lift lever on side, tilt backrest forward
- pull backrest sides apart, remove backrest

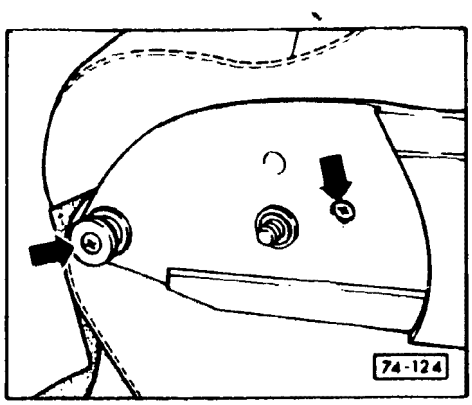

- remove retaining screws from stop pins (**arrow A**), left/right
- remove screw (**arrow B**)

cardiagn.com

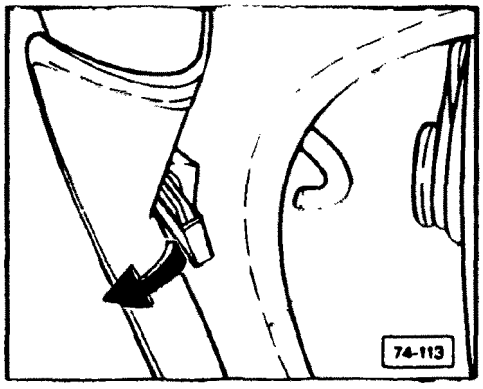

- pry out retaining pin
- unhook side trim from switch trim on seat frame and remove

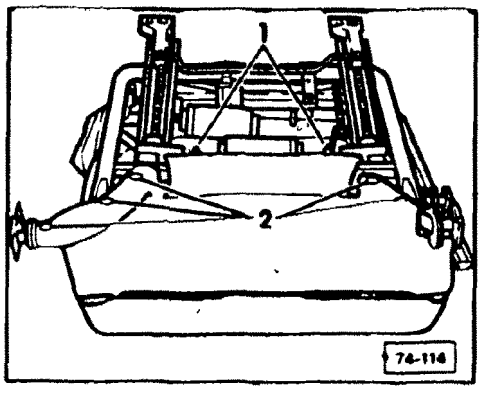

- bend open upholstery hooks 1, unhook lower upholstery trim
- pry out clips 2

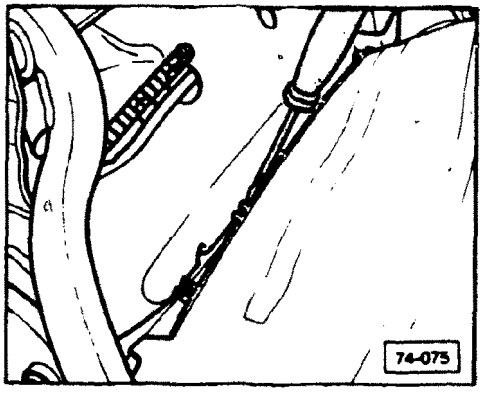

- fold over trim material
- carefully pry off mounting clips with screwdriver
- remove trim from bottom

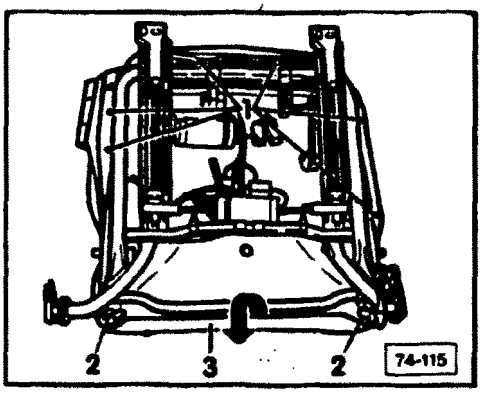

- bend open wire 2 on both sides
- pry out clips 1
- pry off cover reinforcement 3
- fold over seat cover

cardiagn.com

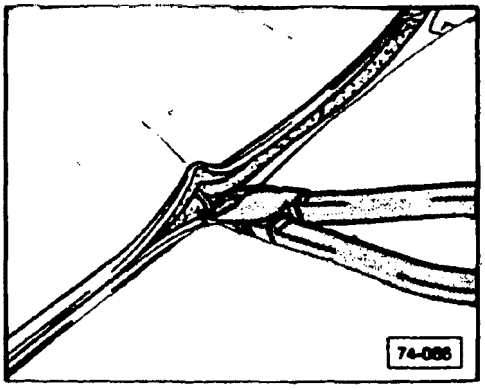

- cut off clips and remove seat cover

CAUTION

Part numbers are for reference only
Always check with your Parts Department for latest parts information.

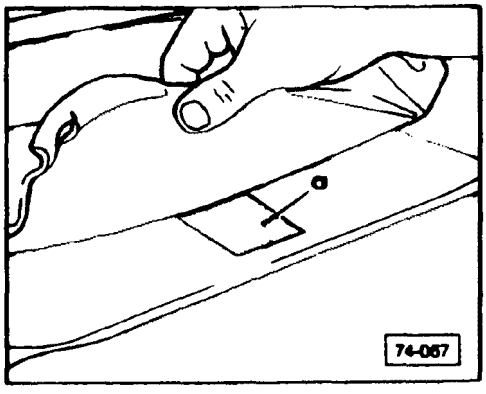

- remove heat element with connector from cushion
  - adhesive strip **a** must remain on cushion
  - heat **a** with hot air blower if necessary to facilitate removal of heat element

Note

Heating element is bonded to cushion as of 9/89

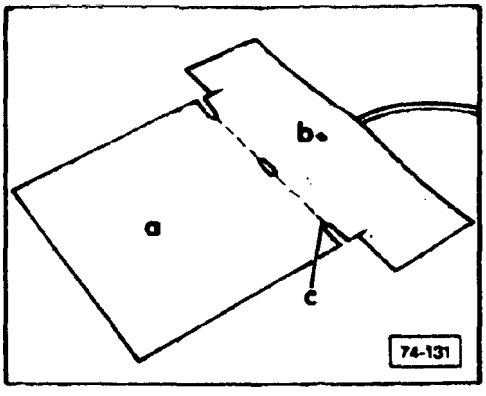

- cut through heating element at **c**
- remove section **b** with electrical connector
  - section **a** remains on cushion

Seat element, installing

- bond replacement element over remaining portion of old element with universal adhesive Part No. **D 001 200** or equivalent

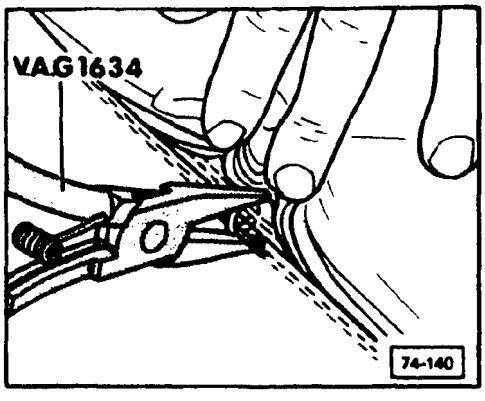

- use upholstery pliers **VAG 1634** or equivalent to secure clips

cardiagn.com

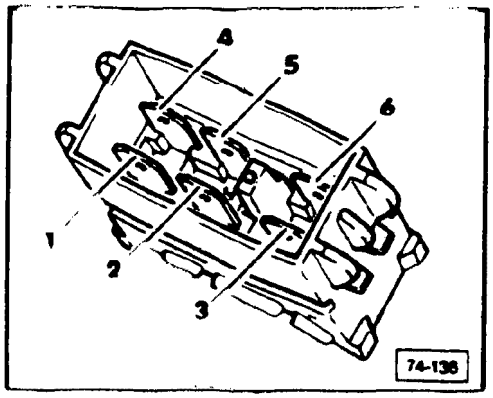

Seat connector, contact locations

1 – seat heat element 1 0 mm² (wire diameter)
2 – temperature sensor 0 5 mm² (wire diameter)
3 – seatback heat element
4 – temperature sensor 0 5 mm² (wire diameter)
5 – seat heat element 1 0 mm² (wire diameter)
6 – seatback heat element

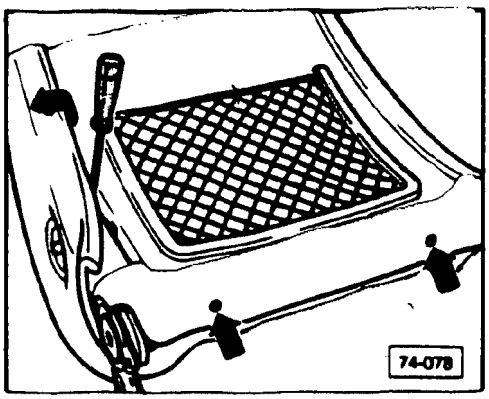

Seatback element, removing

- remove seat from vehicle
- remove seatback
- unscrew trim mounting bolts for trim (**arrows**)
- pry out seatback cover (as shown)
- remove trim from below

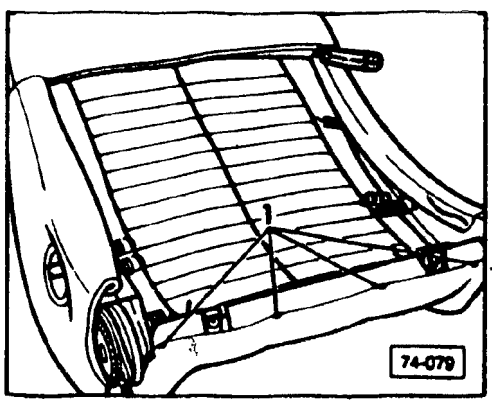

Standard seatback

- remove headrest
- pry off adjustment knob trim, remove screw
- take off adjustment knob
- loosen cover from seatback frame
- carefully pry off cover from top with screwdriver
  - bend open hooks **1**

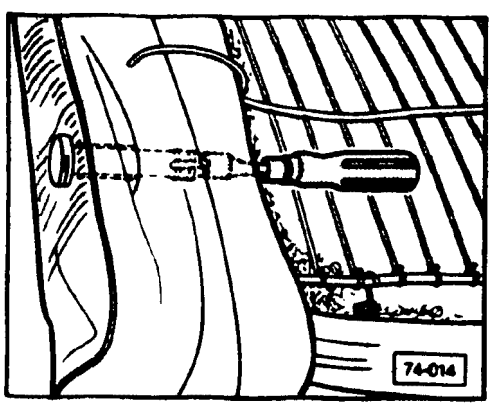

- press out headrest guides with 10 mm (25/64 in.) wrench

cardiagn.com

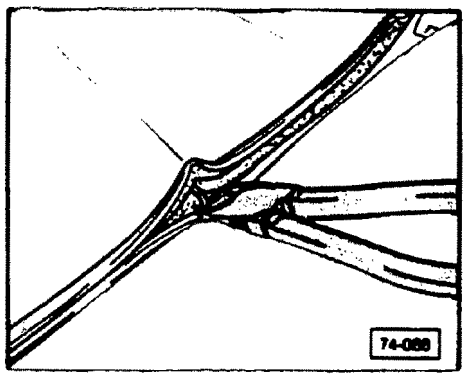

- turn cover over, cut through clips (as shown)
- remove cover, element with connector

Note

Heating element is now bonded to cushion as of 9/89

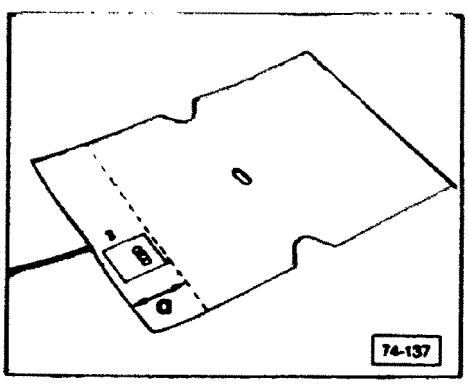

- cut through bonded element as shown
  - a – approximately 8 0 cm (approximately 3 1 in)
- remove section with electrical wires

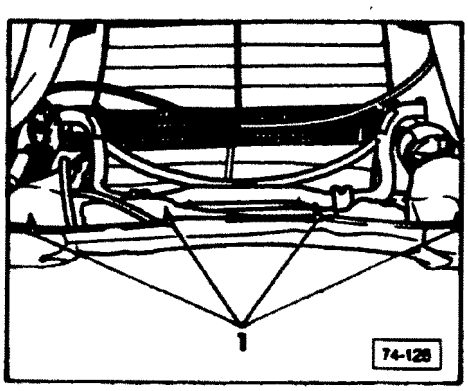

Sport seatback

- bend open upholstery hooks 1, unhook cover
- raise seatback center portion
- loosen cover from inner material layer
  - mark ends with felt tip pen for adhesive strip
- remove intermediate layer

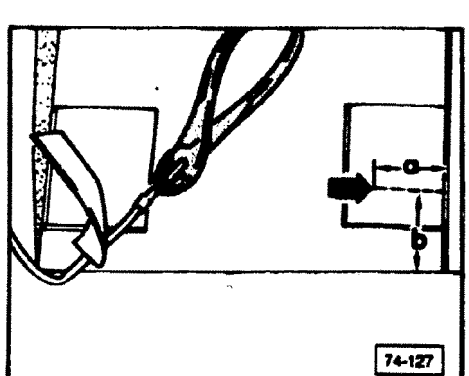

- cut electrical wire to defective element
- cut slit on foam as shown
  - a — approximately 4 0 cm (approximately 1.6 in.)
  - b — approximately 6 0 cm (approximately 2.3 in)

cardiagn.com

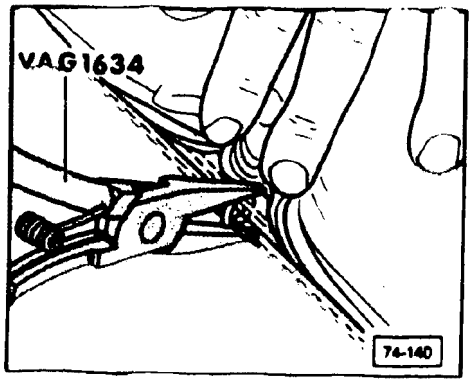

Seatback element, installing

Standard seatback

- bond replacement element over remaining old element
- use upholstery pliers **VAG 1634** or equivalent to secure clips

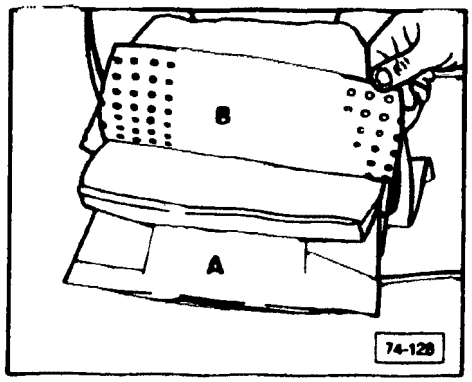

Sport seatback

- remove protective film from replacement element **B**
- install replacement element onto foam **A**
  - keep free from wrinkles
  - repeat for rest of element

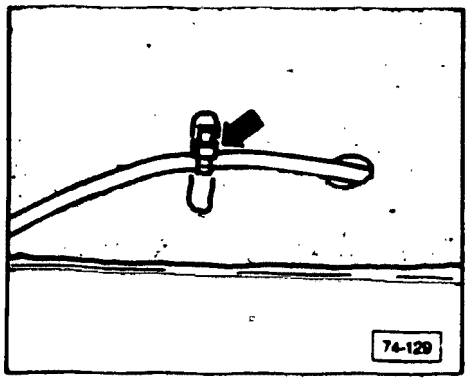

- route and fasten new element through slit and secure with tie wrap

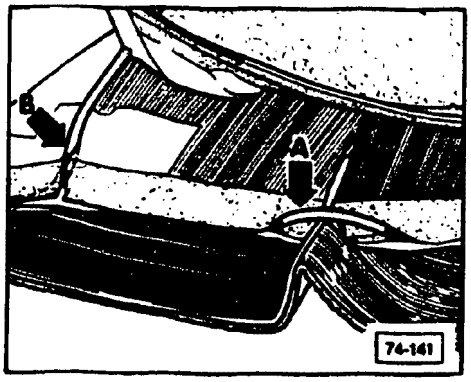

Note

Do not bend wire **A**, cable guide **B**

cardiagn.com

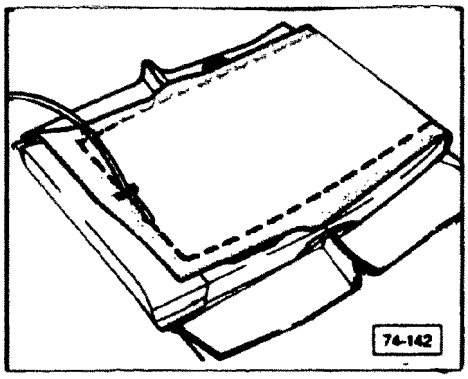

- glue velcro tape onto intermediate layer as marked
- padded side of velcro tape is glued on ends of inside of cover material

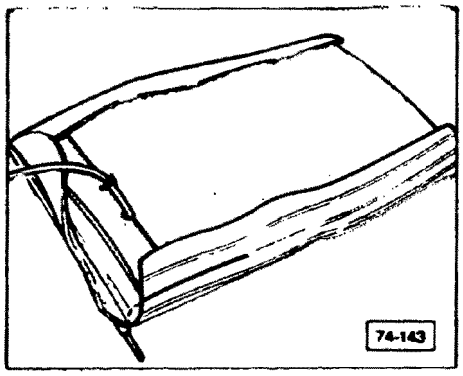

- ensure seat cover is placed evenly, tightly and secured to velcro tape

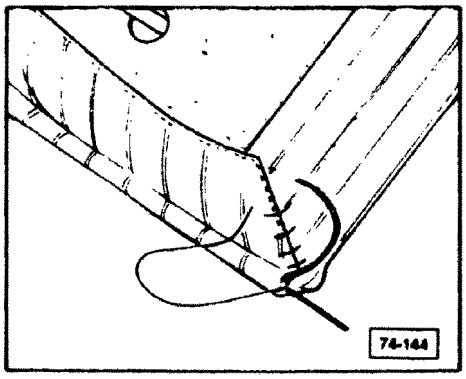

- sew cover corners by hand

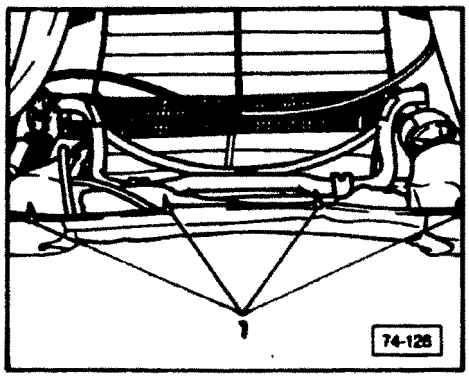

- turn over seatback center section, hook and bend over hooks 1
- reinstall all other components in reverse order of removal
- reconnect battery ground strap
- check seat for proper function

cardiagn.com

Index

Anti-theft alarm system (USA only)
- troubleshooting 90.26

Auxiliary instruments in center console
- assembly 90.19
- removing/installing/checking 90.21
- troubleshooting 90.23

Coolant overheat warning light
- checking (w/Auto-Check system) 90.17
- checking (w/o Auto-Check system) 90.16

Coolant temperature gauge
- checking (w/Auto-Check system) 90.16
- checking (w/o Auto-Check system) 90.15

Electronic thermoswitch
- connector identification 90.7
- location 90.7

Flasher relay
- location 90.3

Fuel gauge
- adjusting 90.15
- checking (80/90) 90.13
- checking (Coupe Quattro) 90.14

Instrument cluster
- assembly 90.2
- rear view 90.4
- removing/installing 90.3
- repairing 90.5

Oil pressure gauge (G11)
- checking 90.21
- does not work 90.25

Oil temperature gauge (G9)
- checking 90.22
- does not work 90.24

Speed sensor
- checking (auto. trans.) 90.18
- checking (manual trans.) 90.17

Thermoswitch
- connector identification 90.7
- location 90.7

Voltage stabilizer
- checking 90.12

Voltmeter (G14)
- checking 90.21
- does not work 90.23

26-point connector
- identification (blue) 90.8
- identification (yellow) 90.9
- removing/installing 90.10
- repairing 90.11

cardiagn.com

Instrument panel, removing/installing/disassembling

- **Flasher relay**
  installing, Fig. 1
- **Instrument cluster**
  removing/installing, page 90.3
- **Instrument panel**
  repairing, page 90.5-90.6
- **Instrument panel warning lights**
  identification, page 90.4

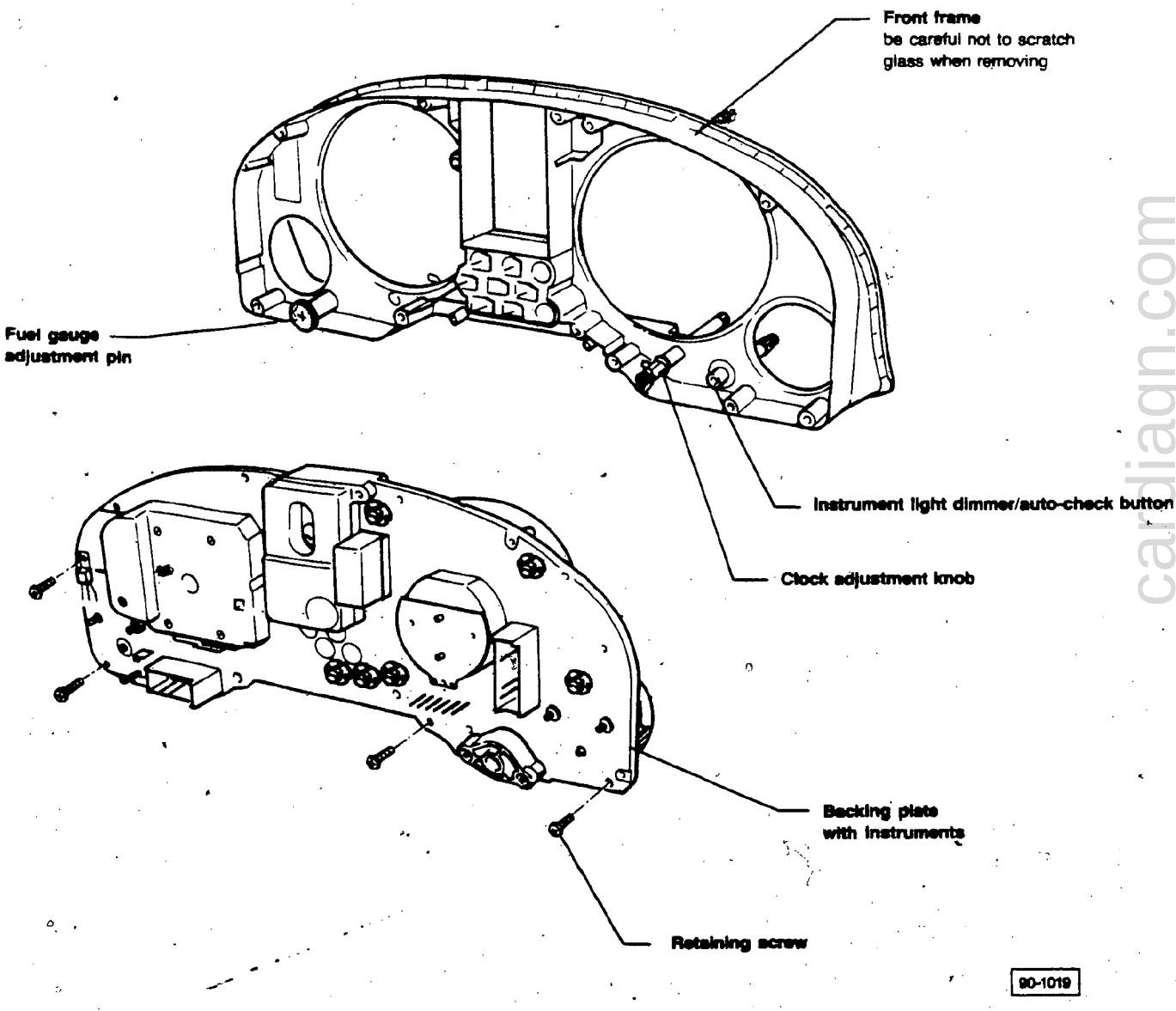

cardiagn.com

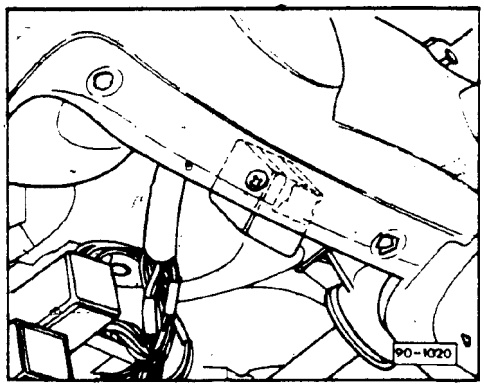

▶ **Fig. 1 Flasher relay**

Relay is fastened underneath instrument panel to the left side of steering column.

- remove cover under left side of instrument panel
- reach up and remove relay

Instrument cluster, removing/installing

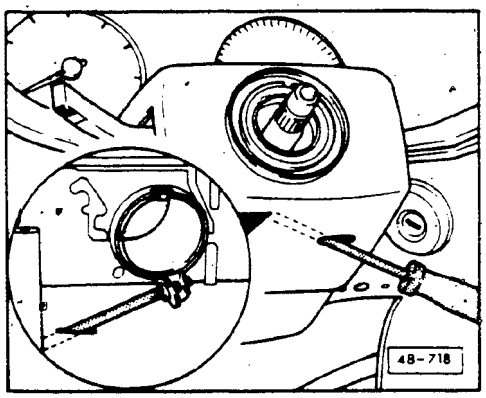

▶

- remove battery ground strap
- remove steering wheel cover
- remove steering wheel
  - 40 Nm (29.5 ft lb)
- loosen clamp on steering column switch
- pull forward and remove electrical connectors
- remove steering column switches

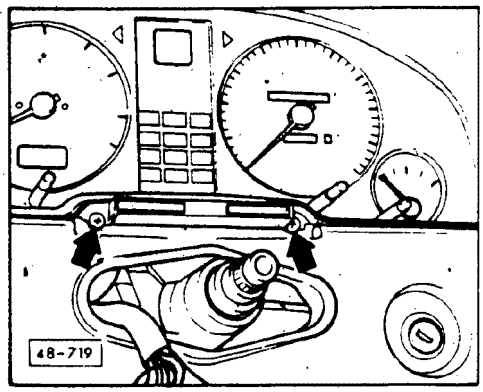

▶

- remove retaining screws (**arrows**)
- tilt instrument cluster back
- remove connector retainers
- remove electrical connectors
- remove instrument cluster

cardiagn.com

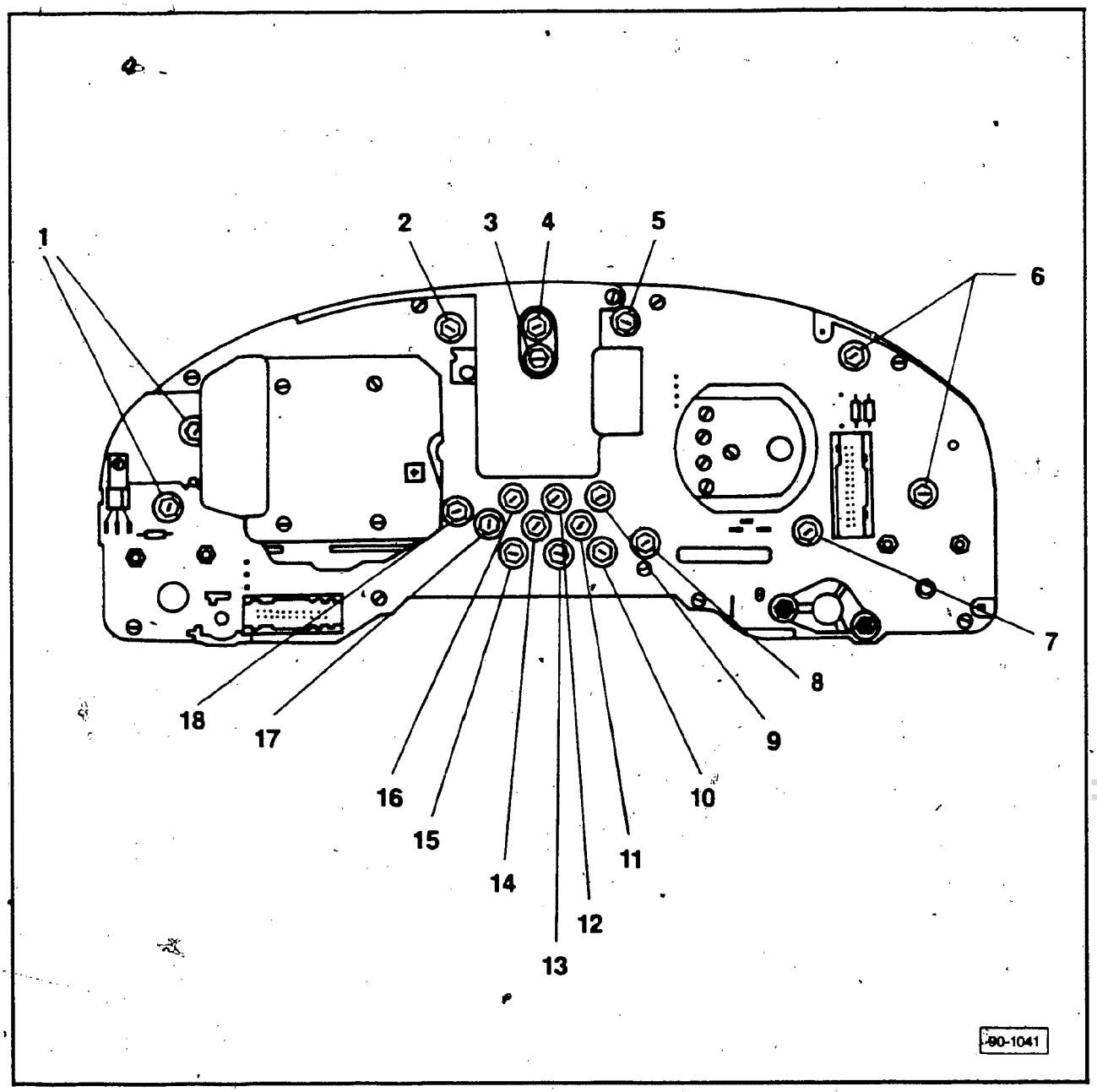

1 — Instrument cluster lights

2 — Turn signal indicator light, right

3 — Brake fluid level warning light

4 — Coolant overheating warning light

5 — Turn signal indicator light, left

6 — Instrument cluster lights

7 — Clock light

8 — Instrument cluster light

9 — Alternator warning light

10 — Oil pressure warning light

11 — Brake fluid level warning light

12 — Upshift indicator light (where applicable)

13 — Park brake warning light

14 — ABS warning light

15 — Seat belt warning light

16 — Engine control indicator light

17 — High beam headlight indicator

18 — Instrument cluster light

cardiagn.com

THIS FRAME INTENTIONALLY LEFT

BLANK

cardiagn.com

Note

Use US 1119 for troubleshooting.

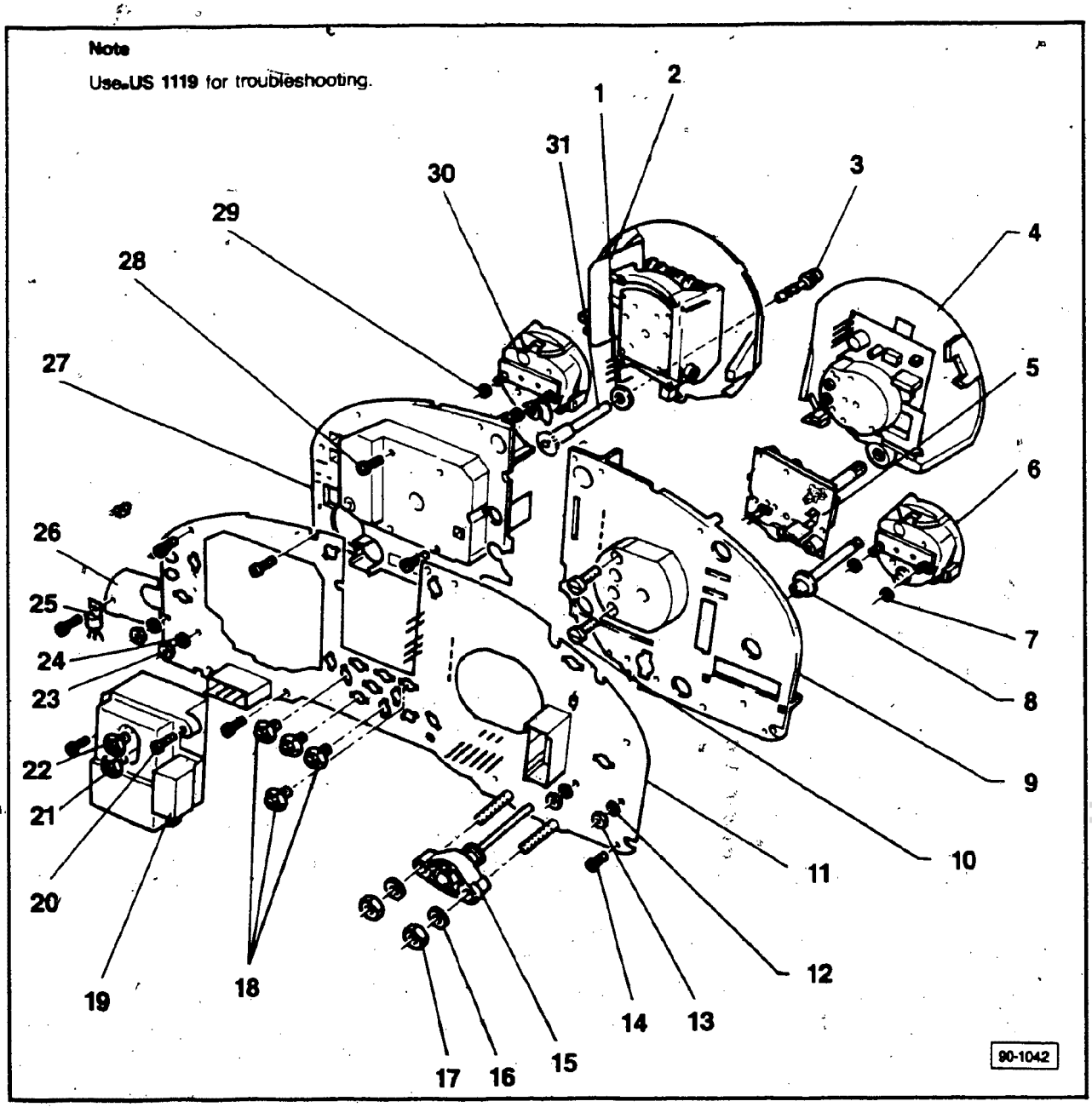

1 — **Felt washer**

2 — **Speedometer**

3 — **Cover for fuel gauge adjustment knob**
- remove with needle nose pliers
- be careful not to scratch glass

4 — **Speedometer**

5 — **Clock**

6 — **Coolant temperature gauge**
- checking (vehicles without Auto-Check system), 90.15
- checking (vehicles with Auto-Check system), 90.16

7 — **Washer**

8 — **Auto-Check/instrument panel dimmer control knob**

9 — **Base plate, left**

10 — **Retaining screws**

11 — **Printed circuit board** multi-point connector identification, 90.8-90.10

12 — **Corrugated washer**

13 — **Nut**

14 — **Retaining screw**

15 — **Instrument panel light rheostat**

16 — **Washer**

cardiagn.com

17 — **Nut**

18 — **Warning/indicator lamps**

19 — **Coolant temperature/brake fluid level warning lights**

20 — **Retaining screw**

21 — **Brake warning indicator**

22 — **Coolant overheat warning light**
connection to electronic thermoswitch, 90.7

23 — **Nut**

24 — **Corrugated washer**

25 — **Voltage stabilizer**
checking, 90.12

26 — **Heat sink**

27 — **Base plate, right**

28 — **Retaining screw**

29 — **Washer**

30 — **Fuel gauge**
- checking, 90.13, 90.14
- adjusting, 90.15

31 — **Fuel gauge adjustment knob**

cardiagn.com

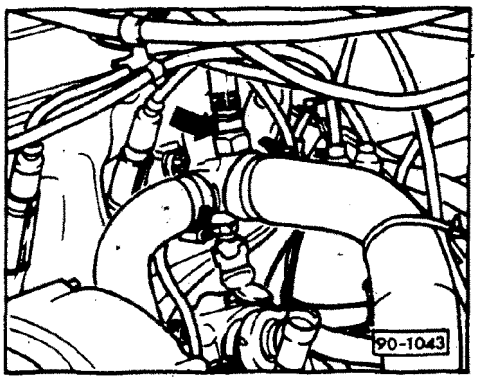

▶ **Fig. 1 Thermoswitch, installation location**

Used on vehicles without Auto-Check system.

Located in water connection on cylinder head.

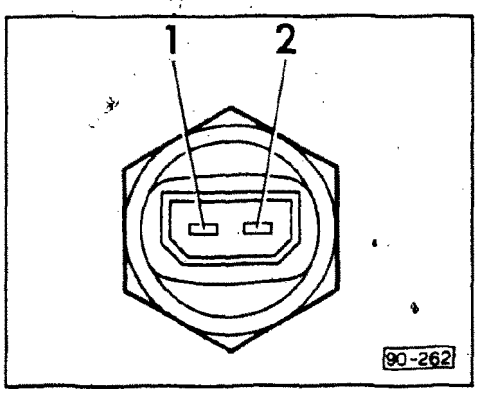

▶ **Fig. 2 Thermoswitch, electrical connector identification**

1 sends signal to overheat warning indicator when coolant temperature is higher than 120°C (248°F)

2 sends signal to coolant temperature gauge

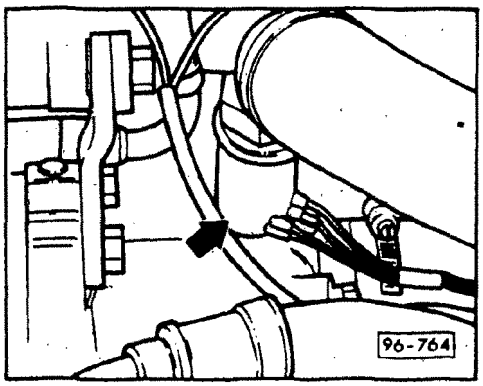

▶ **Fig. 3 Electronic thermoswitch, installation location**

Used on vehicles with Auto-Check system.

Located in water connection on cylinder head.

Note

To prevent damage to other electronic components, use **US 1119** when checking.

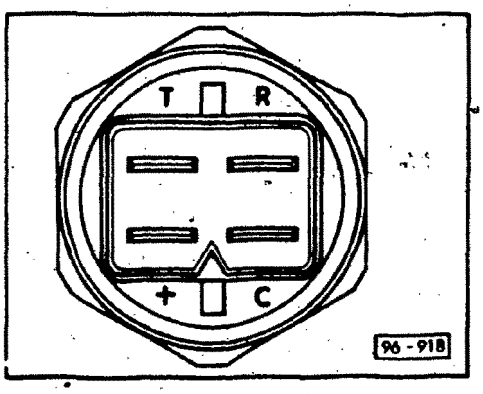

▶ **Fig. 4 Electronic thermoswitch, electrical connector identification**

+ plus (+) from terminal 15a

C sends signal to overheat warning light when engine coolant temperature is higher than 120°C (248°F)

R to A/C safety switch

T sends signal to coolant temperature gauge

cardiagn.com

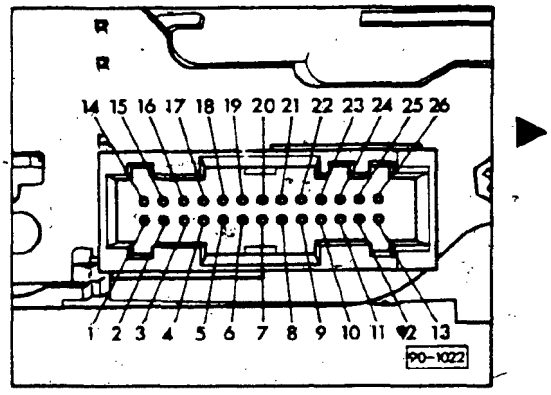

26-point connector (blue) on instrument cluster, identification

1 — not used
2 — not used
3 — not used
4 — not used
5 — not used
6 — not used
7 — not used
8 — not used
9 — not used

10 — negative (–) connection for ABS warning light
11 — not used
12 — not used
13 — negative (–) connection for Upshift indicator light
14 — not used
15 — negative (–) connection for fuel gauge
16 — plus (+) connection for electronic speedometer, connected to voltage stabilizer and warning lamps
17 — to turn signal indicator, right
18 — output signal to cruise control
19 — not used
20 — input signal from speed sensor (for electronic speedometer
21 — negative (–) connection from instrument panel lights, connected to electronic speedometer, voltage stabilizer, high beam indicator
22 — to instrument panel light rheostat, clock light, 26 point connector (yellow) pins 1 and 4
23 — plus (+) connection to high beam warning light
24 — negative (–) connection to engine control indicator light
25 — negative (–) connection to seat belt warning light
26 — plus (+) connection to seat belt warning light

cardiagn.com

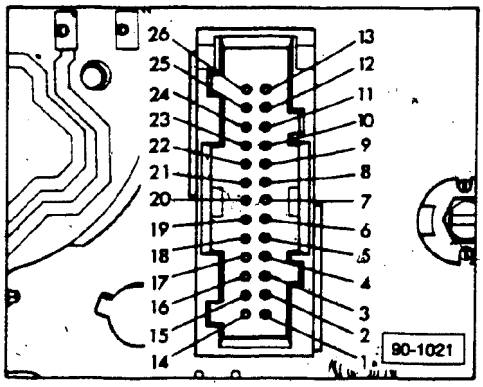

26-point connector (yellow) on instrument cluster, identification

1 — plus (+) connection from light switch to instrument panel light rheostat
2 — negative (–) connection to coolant temperature gauge
3 — Audi 80:
plus (+) connection to Auto-Check button, coolant temperature warning light, tachometer

Audi 90, Coupe:
plus (+) connection to clock light
4 — plus (+) connection, connected to pin 1
5 — plus (+) connection to instrument panel rheostat
6 — not used
7 — not used
8 — Audi 80:
negative (–) connected to instrument panel lights, clock reset button, turn signal indicators, left and right, Auto-Check display, tachometer, digital clock

Audi 90, Coupe:
negative (–) connected to instrument panel lights, turn signal indicators, left and right, tachometer, digital clock light, digital clock
9 — plus (+) connection to flashers
10 — negative (–) connection to overheat warning light
11 — negative (–) connection to brake warning light
12 — not used
13 — negative (–) connection to alternator warning light, Auto-Check display, coolant temperature warning light, brake warning light

cardiagn.com

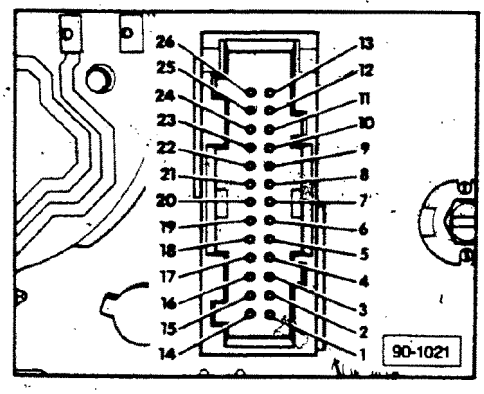

14 — not used
15 — not used
16 — not used
17 — not used
18 — not used
19 — plus (+) connection (30al) to clock
20 — not used
21 — not used
22 — input signal, for tachometer
23 — negative (–) connection coding for tachometer (5 cylinder only)
24 — negative (–) connection to oil pressure warning light
25 — negative (–) connection to park brake warning indicator
26 — Audi 80:
negative (–) connection to brake fluid level warning light

Audi 90, Coupe:
not used

26-point connectors on instrument cluster, removing/installing

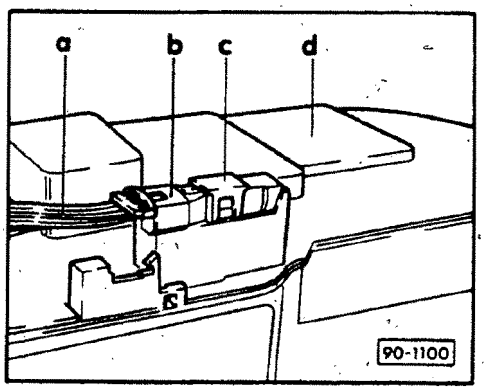

Removing

a — Wiring harness
b — Connector housing
c — Connector lock
d — Instrument cluster

- disengage connector lock using a small screwdriver and pull open (**arrow**)

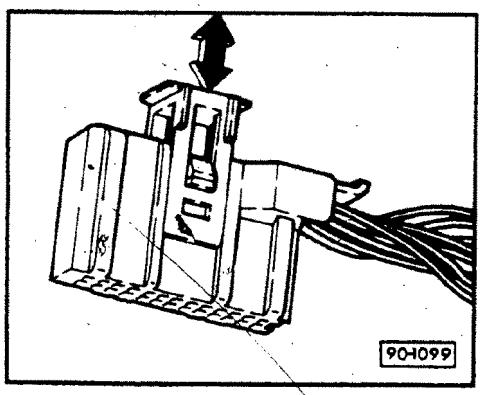

Note

Connector can be removed only when connector lock is open.

- remove connector from instrument cluster

Installing

- fully insert connector into instrument cluster
- push connector lock down until locked

cardiagn.com

26-point connectors on instrument cluster, repairing

Damaged or loose 26-point connector terminals can be repaired without replacing the entire wiring harness. Use Connector Terminal Repair Kit Part No. **893 998 315**.

> **CAUTION**
>
> Part numbers are for reference only. Always check with your Parts Department for latest information.

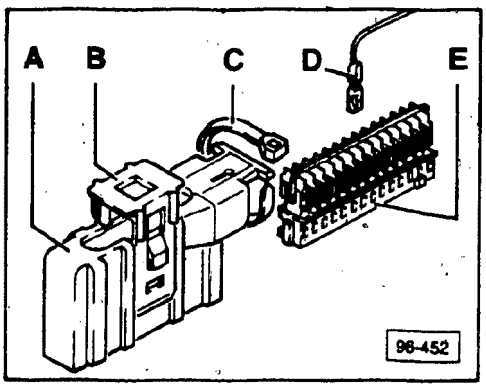

- remove 26-point connector from instrument cluster
- remove connector tie-wrap **C**
- remove inner connector housing **E** from outer connector housing **A**
- remove damaged terminal **D** from housing **E**
- install small end of new terminal/wire assembly (from Repair Kit Part No. **893 998 315**) into proper location of inner connector housing **E**
- install other end of new terminal/wire assembly into position **1** of new two-point connector housing, Part No. **893 971 632** (from Repair Kit)

Note

The new two-point connectors (from Repair Kit) have numbers **1** and **2** stamped on the housing to identify each terminal position. Always match position **1** of one connector to position **1** of the other connector when inserting terminals.

- cut damaged terminal **D** from harness wire
- properly crimp new spade terminal (from Repair Kit) onto harness wire
- insert new spade terminal into position **1** of new two-point connector housing, Part No. **893 971 992** (from Repair Kit)
- install new connector housings together
- install inner connector housing **E** into outer connector housing **A**
- install tie wrap **C**

- secure repaired wire and new connectors to wire harness with tie wrap and insulate harness to prevent rattles
- fully insert 26-point connector into instrument cluster

cardiagn.com

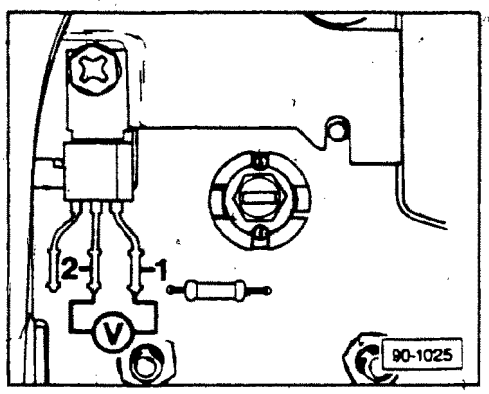

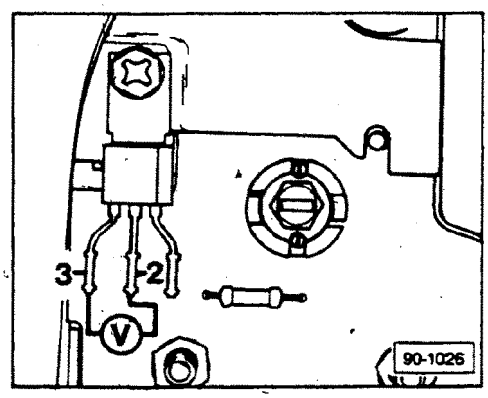

Voltage stabilizer, checking

- remove instrument cluster

Note

Battery and electrical connectors must be connected for the following tests.

- connect voltmeter between positive connection **1** and ground **2**
- switch ignition **ON**
  - voltmeter must read battery voltage

If **NOT**,
- check wiring according to current flow diagram

- connect voltmeter between positive **3** and ground **2**
  - 9.5-10.5V

If **NOT**,
- replace voltage stabilizer

cardiagn.com

Fuel gauge, checking

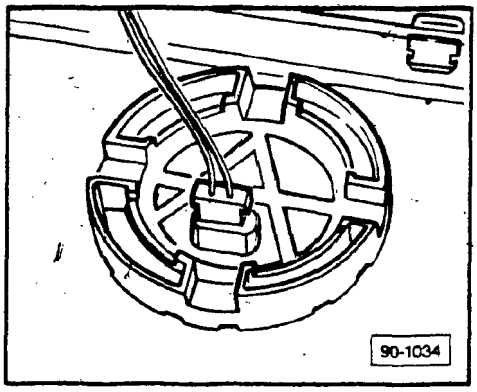

Audi 80/90, 80/90 Quattro

- remove luggage compartment cover
- remove connector from fuel gauge sender

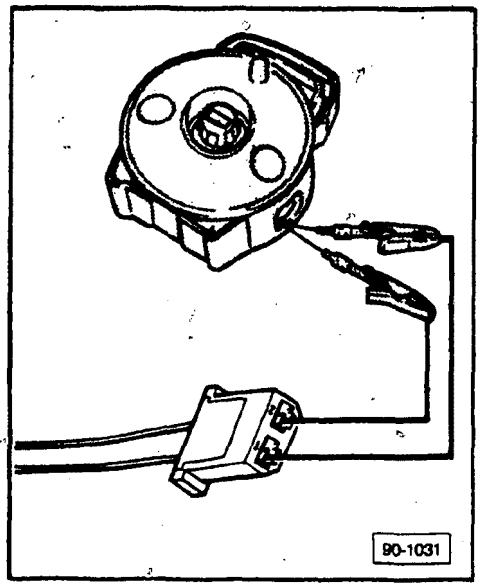

- connect **VW 1301** to fuel gauge sender terminals **1** and **2**

> **CAUTION**
>
> Be sure that connector terminals are not pushed back into sleeve during test or when reconnecting to fuel gauge sender.

- switch ignition **ON**
- adjust **VW 1301** according to following:

Vehicle type	VW 1301 set to	Fuel reserve	Resistance (ohms)
Audi 80/90	280	8L (2.1 gallons)	149.5
Audi 80/90 Quattro	280	12L (3.2 gallons)	149.5
Audi 90 Quattro 20V Canada	280	12L (3.2 gallons)	149.5

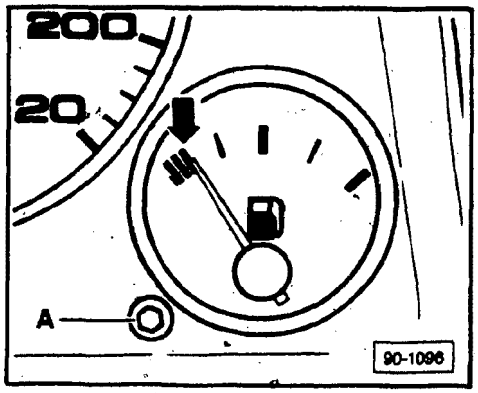

- wait at least two minutes before reading gauge
  - gauge must read to right edge of third red line in reserve area (**arrow**)
- tap instrument cluster glass lightly with finger while reading gauge to assure needle movement is complete

If gauge does not read accurately,
- adjust fuel gauge, 90.15

cardiagn.com

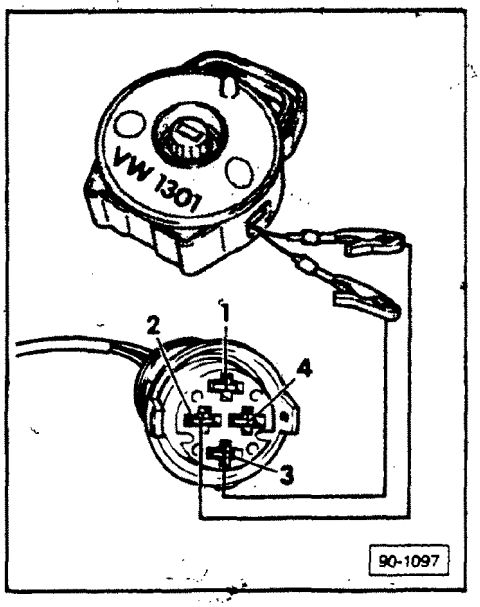

Fuel gauge, checking

Audi Coupe Quattro 20 V

- remove luggage compartment trim
- remove fuel tank cover
- remove connector from fuel gauge sender

- connect **VW 1301** to fuel gauge sender terminals **2** and **3**

> **CAUTION**
>
> Be sure that connector terminals are not pushed back into sleeve during test or when reconnecting to fuel gauge sender.

- switch ignition **ON**
- adjust **VW 1301** according to following:

Vehicle type	VW 1301 set to	Fuel reserve	Resistance (ohms)
Audi Coupe Quattro 20V	280	8L (2.1 gallons)	149.5

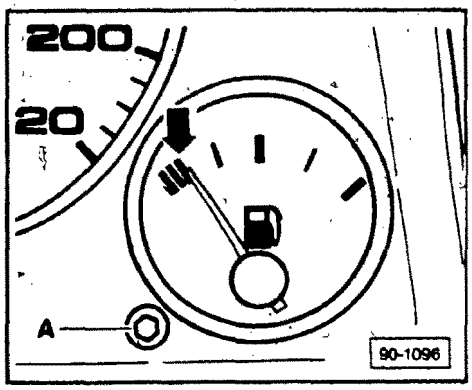

- wait at least two minutes before reading gauge
  - gauge must read to right edge of third red line in reserve area (**arrow**)
- tap instrument cluster glass lightly with finger while reading gauge to assure needle movement is complete

If gauge does not read accurately,
- adjust fuel gauge, 90.15

cardiagn.com

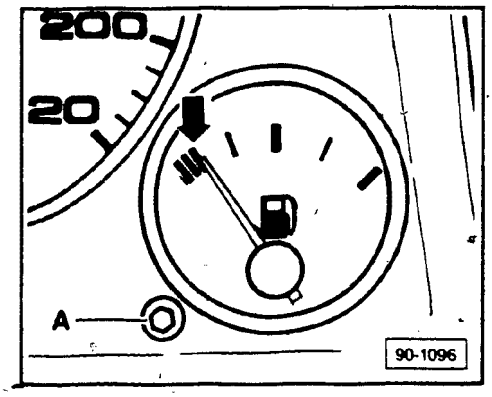

Fuel gauge, adjusting

- leave ignition switch **ON** and **VW 1301** connected as previously outlined in fuel gauge checking procedure
- do not start engine
- protect instrument cluster glass with cloth to prevent scratches
- carefully pull off cap at **A** with needle nose pliers
- turn correction pin **A** until fuel gauge indicator reads to right edge of third red line in reserve area (**arrow**)
- tap instrument cluster glass lightly with finger during adjustment procedure to assure needle movement is complete

If fuel gauge cannot be adjusted,
- check voltage stabilizer, 90.12
- check wiring to fuel gauge according to wiring diagram

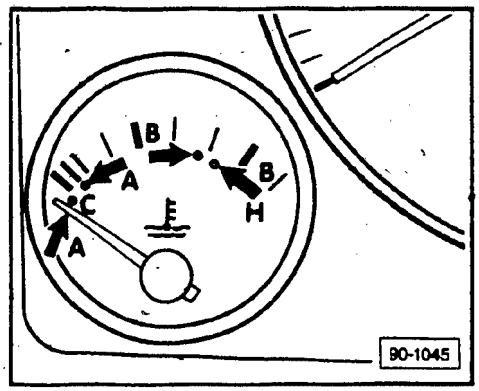

Engine coolant temperature gauge, checking (for vehicles without Auto-Check system)

Note

Check 90.8 for connector identification.

- remove connector to temperature sensor
- connect **VW 1301** to contact **B** and ground
- set dial of **VW 1301** to **660**
- switch ignition **ON**
  - needle must move to area **A** on gauge
- set dial of **VW 1301** to **58**
  - needle must move to area **B** on gauge

If needle does not move to specified area,
- check wiring according to current flow diagram

If wiring is **OK**,
- replace temperature gauge

cardiagn.com

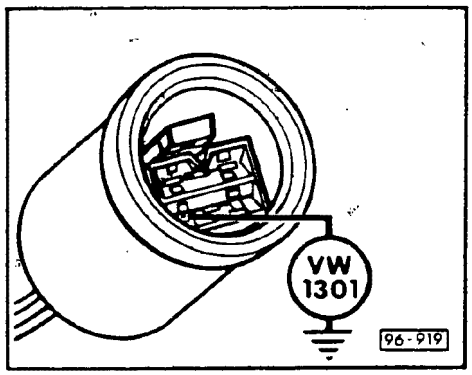

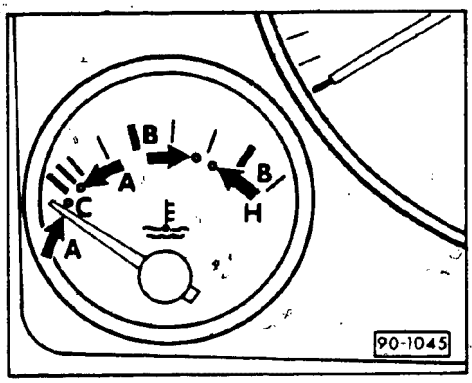

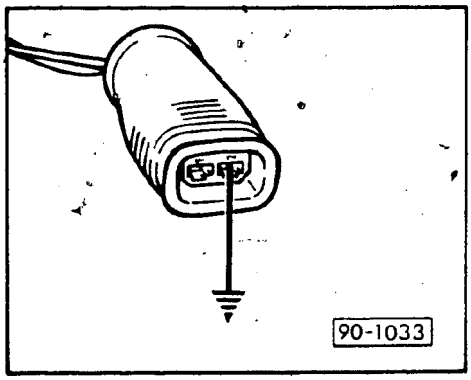

Engine coolant temperature gauge, checking (for vehicles with Auto-Check system)

Note

See page 90.7 for installation location and terminal identification of electronic thermoswitch.

- remove connector from thermoswitch
- connect **VW 1301** to contact **T** and ground
- set dial of **VW 1301** to **660**
- switch ignition **ON**
  - needle must move to area **A** on gauge
- set dial of **VW 1301** to **58**
  - needle must move to area **B** on gauge

If needle does not move to specified area,
- check wiring according to current flow diagram

If wiring is **OK**,
- replace temperature gauge

Engine coolant overheat warning light, checking (vehicles without Auto-Check system)

- remove connector from coolant temperature sensor
- connect jumper wire from contact **2** to ground
- start engine and let idle
  - warning light must blink

If light does not blink,
- check light bulb
- check wiring according to current flow diagram

If **OK**,
- replace engine coolant overheat/brake warning light module in instrument cluster

cardiagn.com

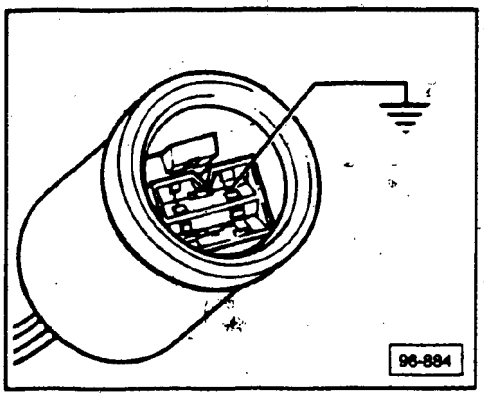

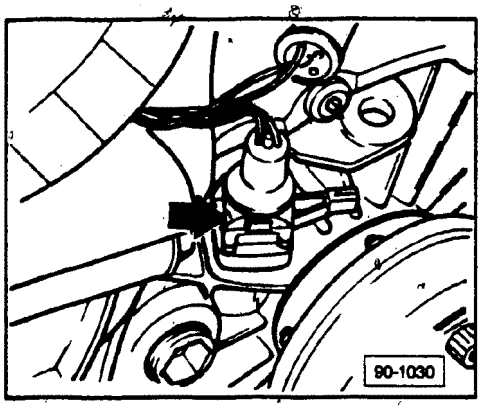

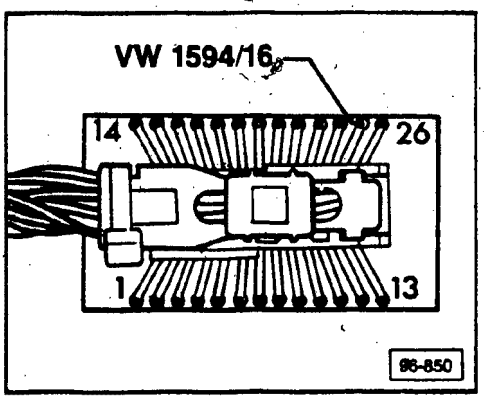

Engine coolant overheat warning light, checking (vehicles with Auto-Check system)

- remove connector from coolant temperature sensor
- connect jumper wire from contact **C** to ground
- start engine and let idle
  - warning light must blink

If light does not blink,
- check light bulb
- check wiring according to current flow diagram

If **OK**,
- replace engine coolant overheat/brake warning light module in instrument cluster

Speed sensor, checking

Note

Sensor is located on left side of transmission near drive shaft flange.

- remove instrument cluster
- remove 26-point connector (blue) from instrument cluster and insert in test adaptor **VW 1594/16**
- connect **US 1119** between terminals **20** and **21**
- set **US 1119** to ohm scale
- place transmission in neutral and apply parking brake
- secure vehicle with wheel chocks to prevent rolling
- raise left front of vehicle at proper lift point until wheel turns freely
- place jack stand under vehicle for safety

cardiagn.com

- slowly rotate wheel
  - reading on **US 1119** must vary between 0.0 ohm and infinity

If specified value is not obtained,
- repair wiring according to current flow diagram **OR**
- replace defective speed sensor

Speed sensor, checking (vehicles with auto trans.)

Note

Sensor is located on left side of transmission near drive shaft flange.

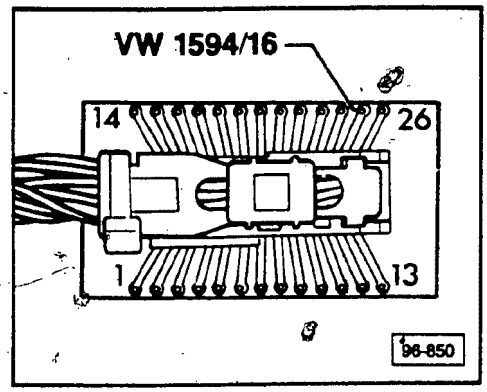

- remove instrument cluster
- remove 26-point connector (blue) from instrument cluster and insert in test adaptor **VW 1594/16**
- set multimeter **US 1119** to 20 V range
- connect red test lead of **US 1119** to terminal **16** and black test lead to terminal **20**
- switch ignition **ON**
- roll vehicle forwards and backwards approximately 4 feet
  - voltage must vary between 0 and 12 volts (pulsing DC voltage)

If not **OK**
- check for break in wiring using wiring diagram

OR

- replace speed sensor

cardiagn.com

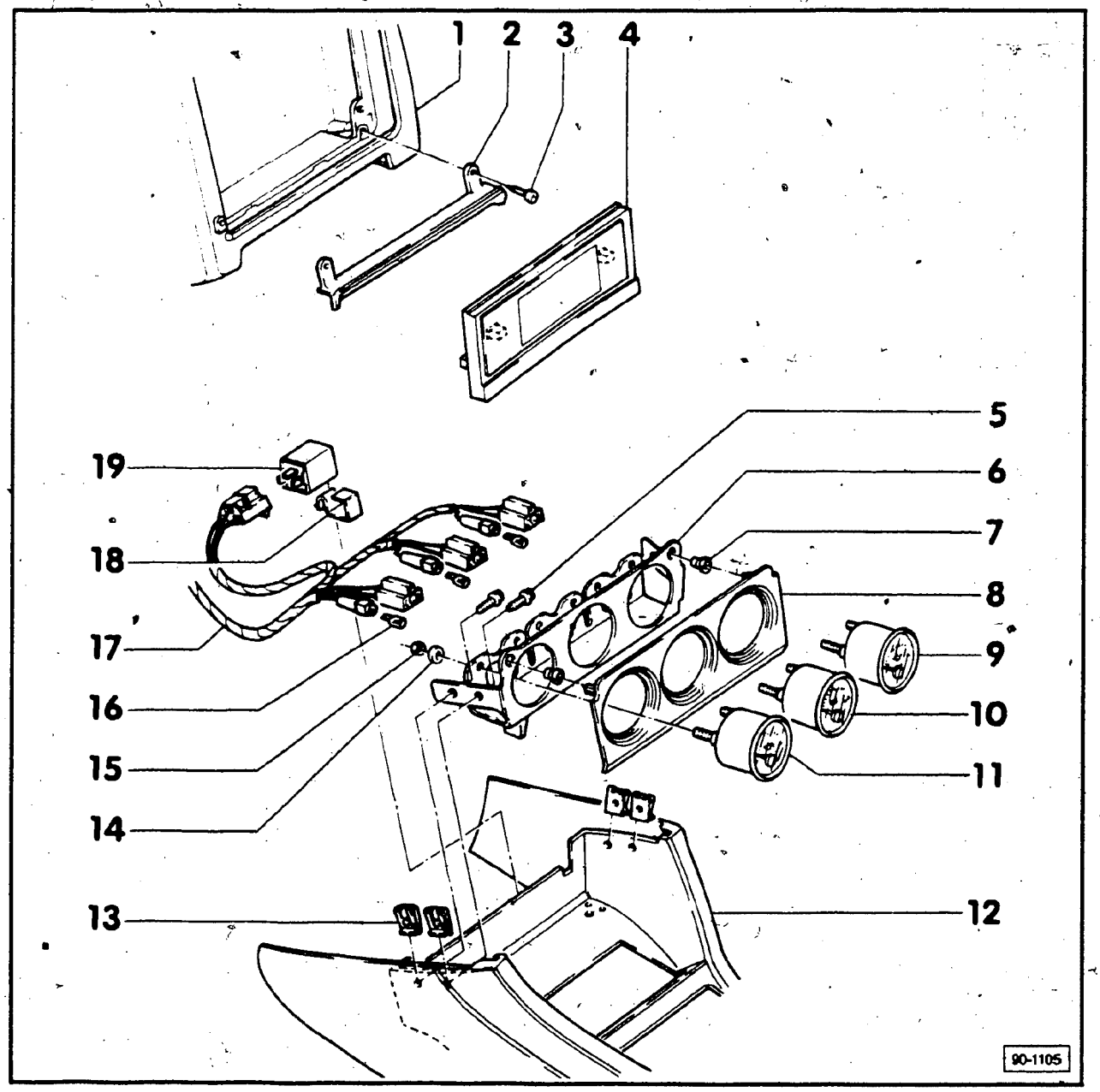

Note

For diagnosing auxiliary instrument problems, see troubleshooting section.

1 — **Instrument panel, center**

2 — **Bracket**

3 — **Screw (2X)**
- **2 NM (18 in. lb)**
- remove trim plate 4 to access screws

4 — **Trim plate**
carefully pry off with screwdriver

5 — **Screw (4X)**
5 Nm (44 in. lb)

6 — **Mounting bracket**

7 — **Grommet (2X)**

6 — **Trim plate**

9 — **Oil temperature gauge (G9)**
- removing, see Index
- troubleshooting, see Index

10 — **Oil pressure gauge (G11)**
- removing, see Index
- troubleshooting, see Index

cardiagn.com

11 — **Voltmeter (G14)**
- removing, see Index
- troubleshooting, see Index

12 — **Center console**

13 — **Speed nut (4X)**

14 — **Washer (6X)**

15 — **Nut (6X)**

16 — **Bulb (3X) (L24, L25, L27)**

17 — **Wire harness**
see Wiring Diagram for wire and connector identification

18 — **Bracket**

19 — **Instrument panel light booster (J166)**

cardiagn.com

Auxiliary instruments in center console, removing/installing/checking

Removing/installing

- remove center console
- remove wire connectors from gauge
- twist and remove bulb holder
- remove gauge retaining nuts and remove gauge
- install in reverse order of removal

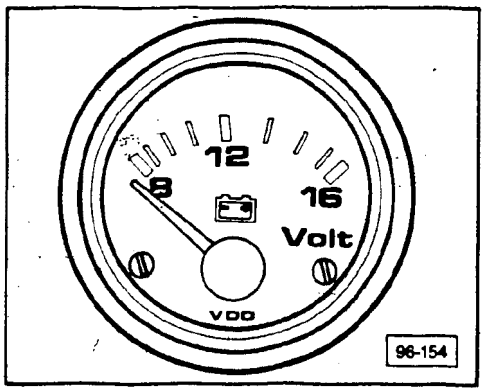

Voltmeter (G14), checking

- switch ignition **ON**
  - voltmeter must show battery voltage

If **NO**

- check wiring to voltmeter for open circuit according to wiring diagram, repair as necessary (see troubleshooting section)

Oil pressure gauge (G11), checking

Note

Use the same procedure on 4-cylinder and 5-cylinder models.

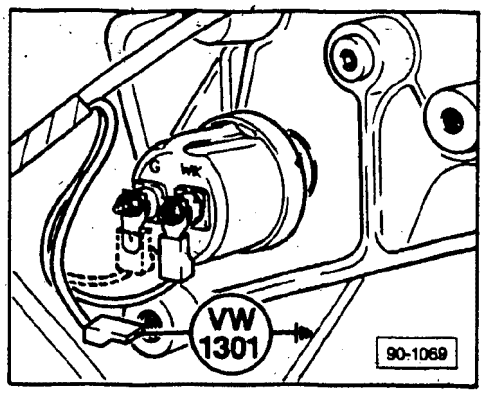

- remove wire connector from terminal **G** on engine oil pressure sensor
  - sensor located on left side of engine block on 5-cylinder models
  - sensor located on top of oil filter housing on 4-cylinder models
- connect tester **VW 1301** between sensor connector and ground
- switch ignition **ON**

cardiagn.com

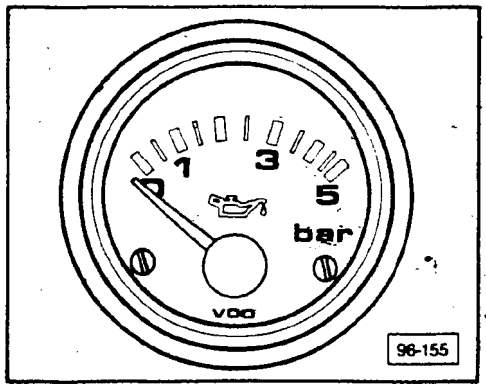

- adjust **VW 1301** as follows:

dial setting	**gauge reads**
350	5 bar (72.5 psi)
150	2 bar (29.0 psi)
10	0 bar (0.0 psi)

- oil pressure gauge must correspond with specified values

If **NO**

- check wiring to oil pressure gauge for open circuit according to wiring diagram, repair as necessary (see troubleshooting section)

Oil temperature gauge (G9), checking

Note

Use the same procedure on 4-cylinder and 5-cylinder models.

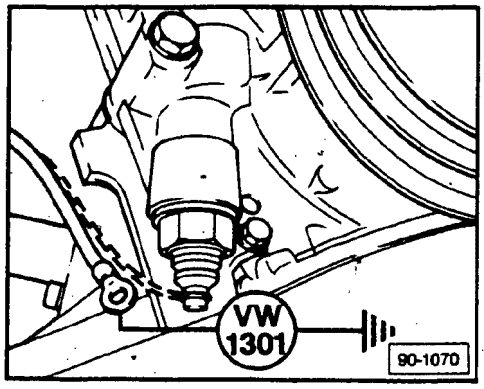

- remove sound dampening pan from below engine compartment
- remove wire connector from oil temperature sensor
  - sensor located on oil pump housing on 5-cylinder models
  - sensor located on top of oil filter housing on 4-cylinder models
- connect tester **VW 1301** between sensor connector and ground
- switch ignition **ON**

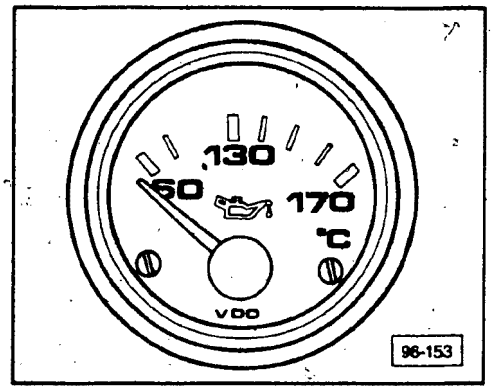

- adjust **VW 1301** as follows:

dial setting	**gauge reads**
26	170°C (338°F)
150	130°C (266°F)
690	60°C (140°F)

- oil temperature gauge must correspond with specified values

If **NO**

- check wiring to oil temperature gauge for open circuit according to wiring diagram, repair as necessary (see troubleshooting section)

cardiagn.com

CONTINUED IN THE

BEGINNING OF NEXT ROW

cardiagn.com

Auxiliary instruments in center console, troubleshooting

Test requirements

- battery **OK**
- fuses **4**, **12** and **14** **OK**
- use multimeter **US 1119** and connector test kit **VW 1594** for electrical tests
- always refer to appropriate wiring diagram when troubleshooting

Voltmeter (G14) does not work

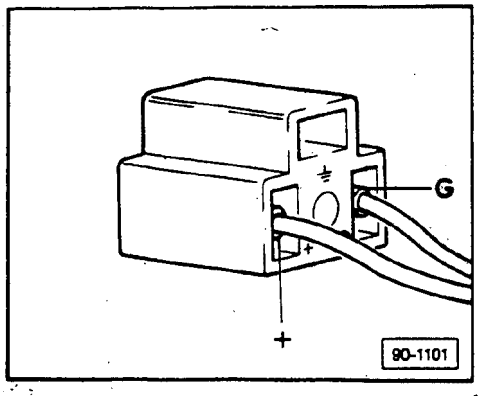

- remove center console
- remove wire connector from voltmeter
- connect multimeter **US 1119** (set to 20 V range) between terminal + and terminal **G** of voltmeter connector
- switch ignition **ON**
  - must be approximately battery voltage

YES	NO
■ replace voltmeter → End	■ check wiring to voltmeter for open circuit according to wiring diagram, repair as necessary → End

cardiagn.com

Oil temperature gauge (G9) does not work

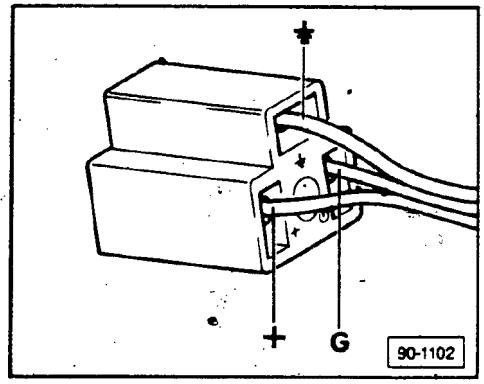

- remove center console
- remove wire connector from oil temperature gauge
- connect multimeter **US 1119** (set to 20 V range) between terminal + and terminal ⏚ (ground) of oil temperature gauge connector
- switch ignition **ON**
  - must be approximately battery voltage

YES	NO

NO → check wiring to oil temperature gauge for open circuit according to wiring diagram, repair as necessary → End

YES →

- switch ignition **OFF**
- remove connector from oil temperature sensor
- connect multimeter **US 1119** (set to ohm range) between terminal **G** of oil temperature gauge connector and connector for oil temperature sensor
  - must be 0.0 ohm (continuity)

YES	NO

NO → repair open circuit in wiring according to wiring diagram → End

YES →

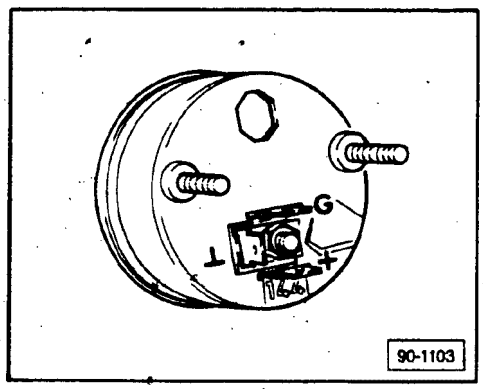

- connect multimeter **US 1119** (set to ohm range) between terminal + and terminal ⊥ (ground) on oil temperature gauge
  - must be approximately 175 ohms

YES	NO

YES → replace oil temperature sensor → End

NO → replace oil temperature gauge → End

cardiagn.com

Oil pressure gauge (G11) does not work

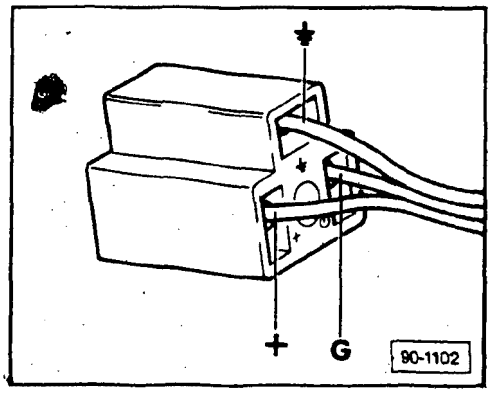

- remove center console
- remove wire connector from oil pressure gauge
- connect multimeter **US 1119** (set to 20 V range) between terminal + and terminal ⏚ (ground) of oil pressure gauge connector
- switch ignition **ON**
  - must be approximately battery voltage

YES → NO →

- check wiring to oil pressure gauge for open circuit according to wiring diagram, repair as necessary

→ End

- switch ignition **OFF**
- remove terminal **G** connector from oil pressure sensor
- connect multimeter **US 1119** (set to ohm range) between terminal **G** of oil pressure gauge connector and terminal **G** of oil pressure sensor connector
  - must be 0.0 ohm (continuity)

YES → NO →

- repair open circuit in wiring according to wiring diagram

→ End

- connect multimeter **US 1119** (set to ohm range) between oil pressure sensor terminal **G** and ground
  - must be approximately 10 ohms

YES → NO →

- replace oil pressure gauge

→ End

- replace oil pressure sensor

→ End

cardiagn.com

THIS FRAME INTENTIONALLY LEFT

BLANK

cardiagn.com

Anti-theft alarm system, troubleshooting

Test requirements

- battery **OK**
- turn signals front and rear **OK**
- fuses **S4** and **S12 OK**

- use main key when checking lock cylinder switches (valet key will not work in trunk lock)
- use digital multimeter **US 1119** and connector test kit **VW 1594** for electrical tests
- always refer to appropriate wiring diagram when troubleshooting

Note

The anti-theft alarm control unit, **J85** and horn, **H8** are located in luggage compartment, left side. The anti-theft alarm system relay is located on the relay panel. The light warning relay is located on the auxiliary relay panel (1990 models only).

- remove spare tire
- remove luggage compartment trim, left side
- remove three-point and twelve-point connectors from anti-theft alarm control unit, **J85**

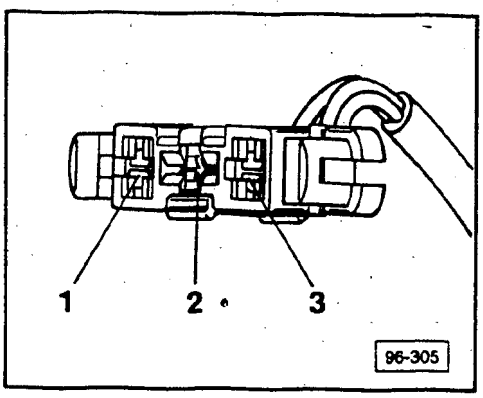

Power supply, checking	
■ set digital multimeter **US 1119** to 20V scale ■ connect red test lead of **US 1119** to terminal **2** and black test lead to terminal **1** of 3-point connector • must be approximately 12 volts	
No	**Yes**
■ check wiring for open circuit according to wiring diagram, repair as necessary ↓ End	Go to Ⓐ next page

cardiagn.com

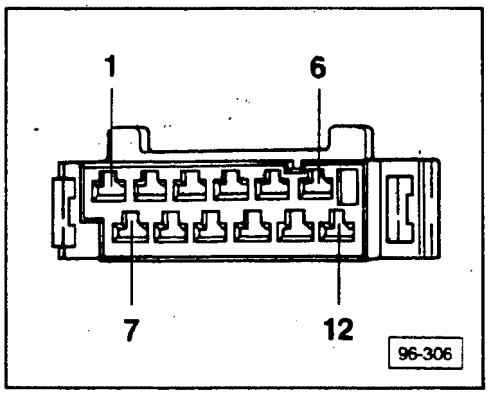

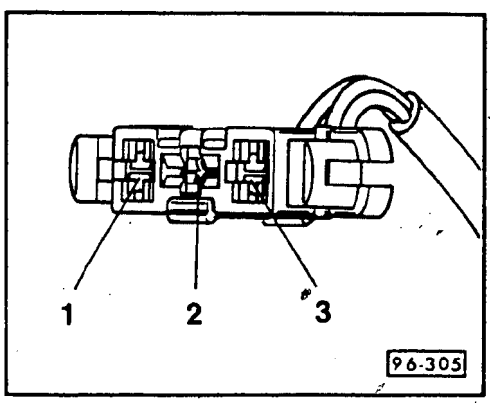

(A)

Ignition power supply, checking

- connect red test lead of **US 1119** to terminal **7** of 12-point connector and black test lead to terminal **1** of 3-point connector
- switch ignition **ON**
  - must be approximately 12 volts

No	Yes
■ check wiring for open circuit according to wiring diagram, repair as necessary **OR** ■ replace defective ignition switch	Go to (B) next page

End

cardiagn.com

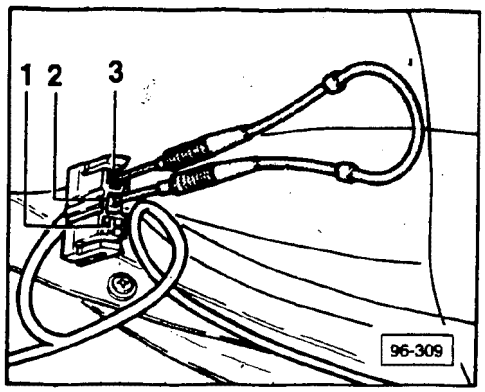

(B)

Anti-theft alarm system horn **H8** (and lights 1990 models), checking

- bridge terminal **2** and terminal **3** of 3-point control unit connector, using connector test kit **VW 1594**
  - horn must sound (1989 models)
  - lights must flash and horn must sound (1990 models)

No	Yes
■ check power supply fuse to terminal **2** of 3-point control unit connector ● see appropriate wiring diagram for exact fuse location and amperage ■ check wiring for open circuit according to wiring diagram, repair as necessary ■ check light warning relay (1990 models), replace if necessary **OR** ■ replace horn	Go to (C) next page

End

cardiagn.com

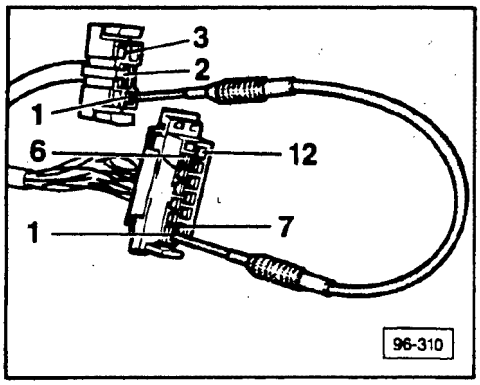

Ⓒ

Starter circuit (relay J60), checking

CAUTION

Place transmission gear selector in park "P" or neutral "N". Transmission must not be in gear when performing the following check.

- bridge terminal 1 of 3-point connector to terminal 1 of 12-point connector, using connector test kit **VW 1594**
  - starter must crank

No	Yes
■ check wiring for open circuit according to wiring diagram, repair as necessary **OR** ■ replace defective relay, ignition switch or starter	Go to Ⓓ next page

End

cardiagn.com

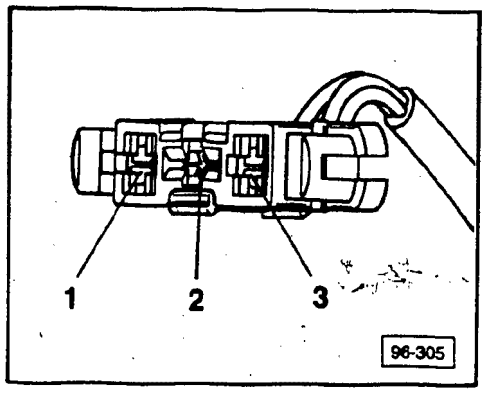

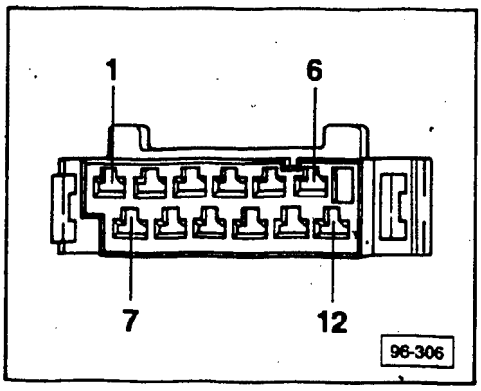

(D)

Signal from driver's or passenger's door "system ON", checking

- connect red test lead of **US 1119** to terminal **2** of 3-point connector and black test lead to terminal **8** of 12-point connector
- close driver's door and insert key into lock cylinder
- turn key to lock position and hold against stop
- repeat for passenger door
  - must be approximately 12 volts each time

No

- check wiring for open circuit according to wiring diagram, repair as necessary
  OR
- replace defective door switch (**F121/F122**)

End

Yes

- turn key to unlock position and hold against stop
- repeat for passenger door
  - must be 0 volts each time

Yes

Go to (E) next page

No

- check wiring for short circuit according to wiring diagram, repair as necessary
  OR
- replace defective door switch (**F121/F122**)

End

cardiagn.com

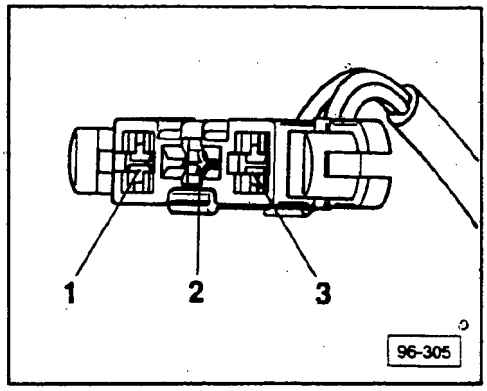

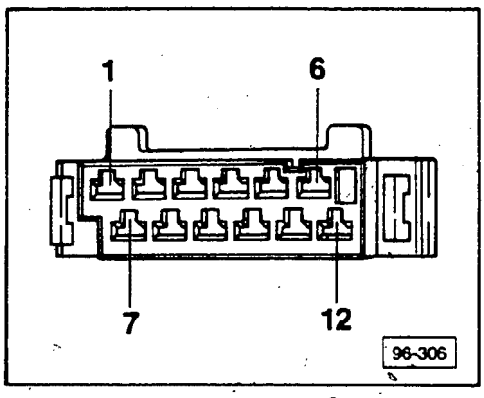

(E)

Signal from driver's or passenger's door "system OFF", checking

- connect red test lead of **US 1119** to terminal **2** of 3-point connector and black test lead to terminal **3** of 12-point connector
- close driver's door and insert key into lock cylinder
- turn key to unlock position and hold against stop
- repeat for passenger door
  - must be approximately 12 volts each time

No

- check wiring for open circuit according to wiring diagram, repair as necessary
  OR
- replace defective door switch (**F121/F122**)

End

Yes

- turn key to lock position and hold against stop
- repeat for passenger door
  - must be 0 volts each time

Yes

Go to (F) next page

No

- check wiring for short circuit according to wiring diagram, repair as necessary
  OR
- replace defective door switch (**F121/F122**)

End

cardiagn.com

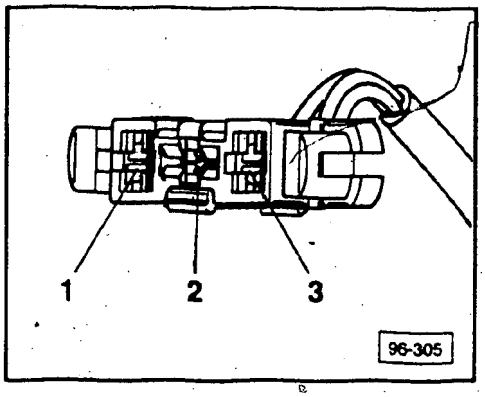

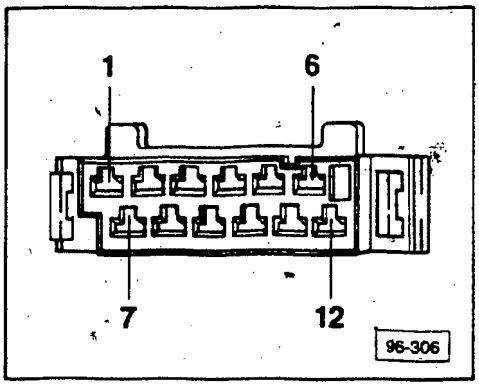

(F)

Signal "hood OPEN", checking

- connect red test lead of **US 1119** to terminal **2** of 3-point connector and black test lead to terminal **4** of 12-point connector
  - must be 0 volts with hood closed
  - must be approximately 12 volts with hood open

No	Yes
■ check wiring for open circuit according to wiring diagram, repair as necessary **OR** ■ replace defective hood switch (**F120**)	Go to (G) next page

End

cardiagn.com

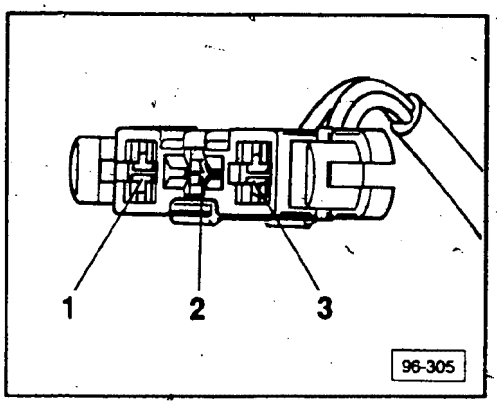

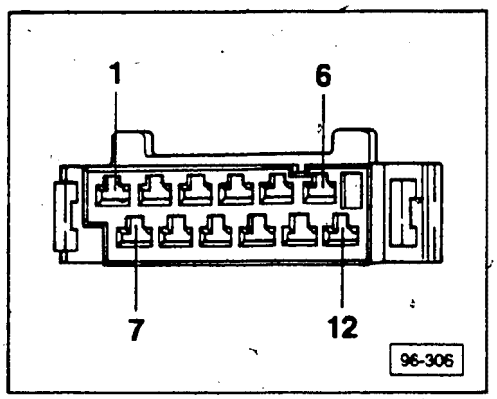

Ⓖ

Signal "doors OPEN", checking

- connect red test lead of **US 1119** to terminal **2** of 3-point connector and black test lead to terminal **5** of 12-point connector
  - must be 0 volts with all doors closed
  - must be approximately 12 volts with doors opened individually

No

- check wiring for open circuit according to wiring diagram, repair as necessary

  OR
- replace defective door contact switch (**F2, F3, F10*, F11***), *Four door only

End

Yes

Go to Ⓗ next page

cardiagn.com

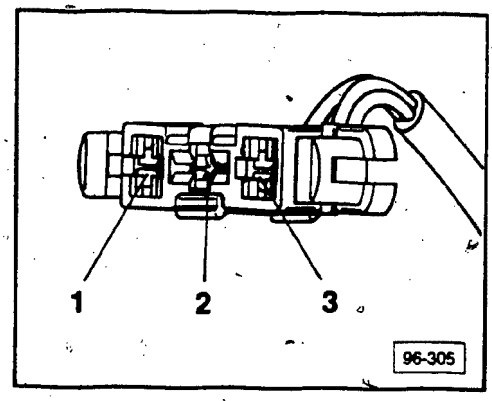

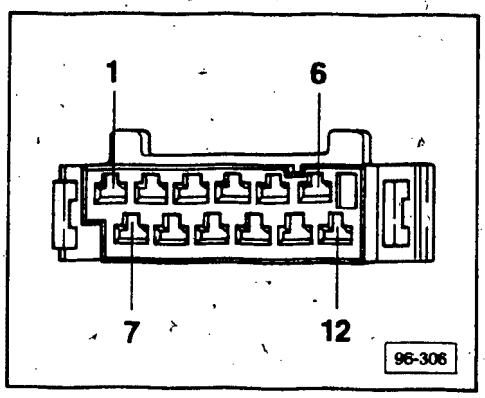

(H)

Signal "trunk OPEN", checking

- connect red test lead of **US 1119** to terminal **2** of 3-point connector and black test lead to terminal **9** of 12-point connector
  - must be approximately 12 volts with trunk open
- keeping trunk lid open, manually lock trunk latch mechanism
  - must be 0 volts

No	Yes
■ check wiring for open circuit according to wiring diagram, repair as necessary **OR** ■ replace defective trunk switch (**F123**)	Go to (I) next page

End

cardiagn.com

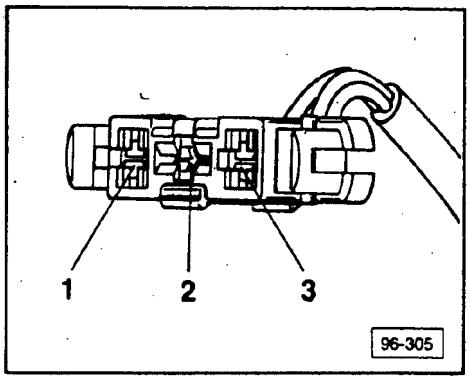

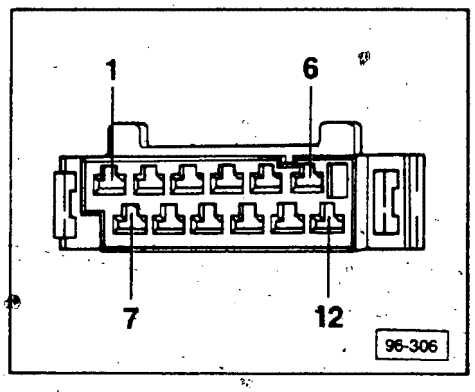

(I)

Signal from trunk lock cylinder "system **OFF**", checking

- connect red test lead of **US 1119** to terminal **2** of 3-point connector and black test lead to terminal **10** of 12-point connector
- insert main key into trunk lock cylinder (trunk lid open)
- turn key to unlock position and hold against stop
  - must be approximately 12 volts

No	Yes
■ check wiring for open circuit according to wiring diagram, repair as necessary **OR** ■ replace defective trunk lock cylinder (**F124**)	Go to (J) next page

End

cardiagn.com

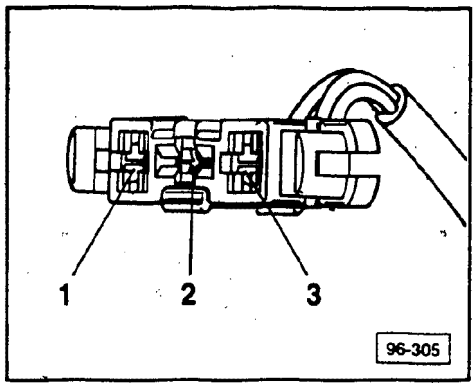

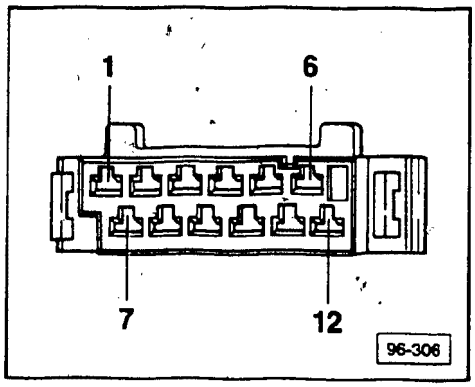

(J)

Signal from radio, checking

- connect red test lead of **US 1119** to terminal **2** of 3-point connector and black test lead to terminal **6** of 12-point connector
  - must be approximately 12 volts

No	Yes
■ check wiring for open circuit according to wiring diagram, repair as necessary **OR** ■ replace radio	■ replace anti-theft alarm control unit, **J85**
End	End

cardiagn.com

Index

index continues on next page

RADIO

CD changer controller
* - removing/installing 91.40

CD changer system
* - component layout 91.38
* - components, removing/installing 91.40
* - electrical connectors, terminal identification 91.41
* - self-diagnosis 91.43
* - troubleshooting 91.45

CD changer unit
* - cable, terminal identification 91.41
* - removing/installing 91.40

CD frequency switch
* - changing 91.53

CD loudness switch
* - changing 91.52

CD magazine
* - emergency ejecting 91.52

CD remote control cable
* - terminal identification 91.41

Eight-point radio connector
* - terminal identification 91.42

Four-point connector
* - terminal identification 91.42

Front antenna
- checking 91.31
- installation/connections 91.30

Radio
- connectors 91.29
- signal reception 91.28

Rear antenna
- checking 91.33
- installation/connections 91.32

Wiesbaden fixed coded radio
- coding a new or remanufactured radio 91.35
- overview 91.35
- reactivating radio after reconnecting power 91.36
- unlocking an electronically locked radio 91.37

* NEW INFORMATION since last filming

cardiagn.com

Index

BOARD COMPUTER

1988/1989

Board computer
- checking 91.8

Computer code
- checking 91.3

Country code
- checking 91.4

Fuel consumption correction factor
- checking 91.5

Fuel injection code
- checking 91.4

Function selector switch
- checking 91.6

Starting m. y. 1990

Board computer
- checking 91.14
- code, checking 91.10

Country code
- checking 91.11

Fuel consumption correction factor
- checking 91.12

Fuel injection code
- checking 91.11

Function selector switch
- checking 91.13
- operating 91.9

1988-1991

Average fuel consumption display
- checking 91.16

Average speed display
- checking 91.15

Board computer
- functional testing 91.2
- range calibration 91.22
- removing/installing 91.21
- voltage supply and output signal, checking 91.18

Fuel consumption
- factor, correcting 91.23
- signal from fuel injection control unit, checking 91.27
- since start, checking 91.15

Fuel gauge display
- checking 91.23

Range reading
- checking 91.16

Speed sensor
- checking (auto. trans.) 91.26
- checking (manual trans.) 91.25

Speed signal
- checking 91.20

cardiagn.com

Board Computer, functional testing

It is possible to check the condition of the computer components by selecting the individual functions in the specified sequence.

If defective components are found, check the wiring to these components using the wiring diagram.

The Board Computer is located in a module on the back of instrument cluster.

On vehicles with Board Computer and Auto-Check system, both components are contained in one module.

Individual components can be removed from the module and replaced.

For example:
If a vehicle with Board Computer and Auto-Check system has a defective Board Computer, the Board Computer can be removed from the module and replaced.

If a defect is found in the display unit of the Board Computer, it must be replaced.

If the Board Computer is replaced, the coding connector of the old computer must be installed on the new computer.

If the coding connector is not correct, the correct connector may be ordered by the Parts Department.

Check the following first:
- fuse S12 **OK**
- fuse S4 **OK**

Always perform complete functional testing procedure.

cardiagn.com

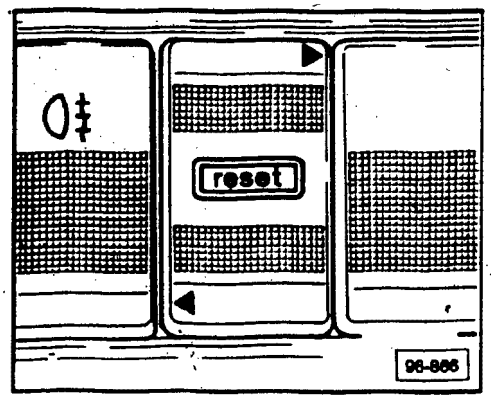

Computer code, checking

- switch ignition **OFF**
- push RESET button and hold
- switch ignition **ON** (while holding RESET button down)
  - 8 and appropriate code displayed

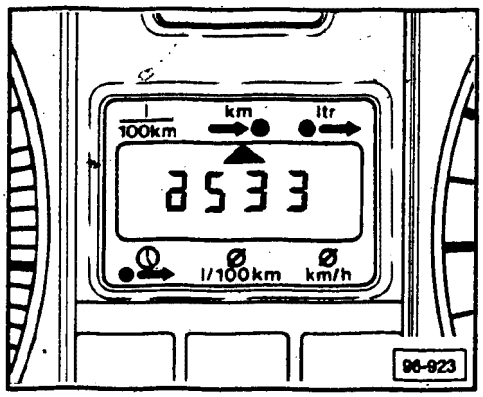

Code numbers

503 = Audi 90 (USA)
523 = Audi 80/90 Quattro (USA)
523 = Audi 90 Quattro (Canada)

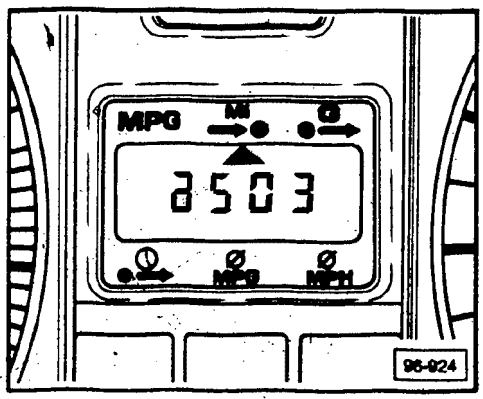

If code is indicated,
- switch ignition **OFF**
- check country code

If code is **NOT** indicated,
- check function selector switch
- repeat test

If code is still not displayed or displayed incorrectly,
- check consumption signal from fuel injection control unit

If code is still not displayed or displayed incorrectly,
- check Board Computer

cardiagn.com

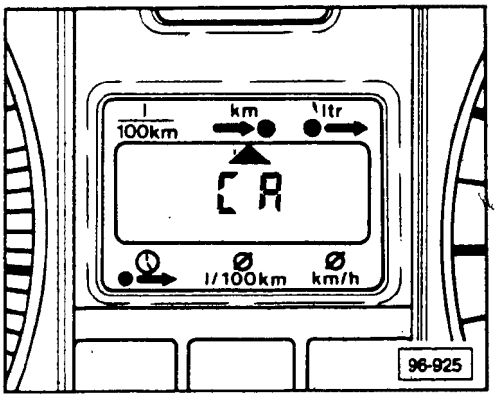

Country code, checking

- switch ignition **OFF**
- push and hold RESET button down
- switch ignition **ON** (while holding RESET button down)

- release RESET button
- push lower function selector button and hold down
  - country code is displayed

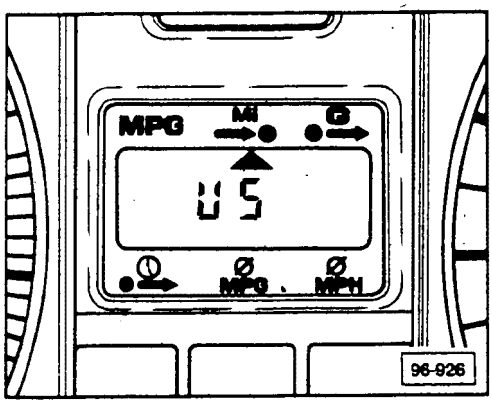

Country codes

EU = Europe
GB = Great Britain
US = USA
CA = Canada*
SA = Saudi Arabia
JA = Japan

*The country codes for CA (Canada) and SA (Saudi Arabia) are displayed alternately once every second.

If country code is displayed,
- switch ignition **OFF**
- check fuel injection code

If correct country code is **NOT** displayed,
- replace Board Computer control unit

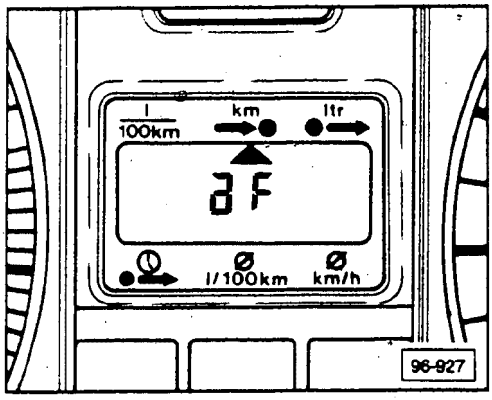

Fuel injection code, checking

Note

This code will only appear if there is a defect in the wire for the fuel consumption indicator signal.

- switch ignition **OFF**
- press and hold RESET button down
- switch ignition **ON** (while holding RESET button down)

cardiagn.com

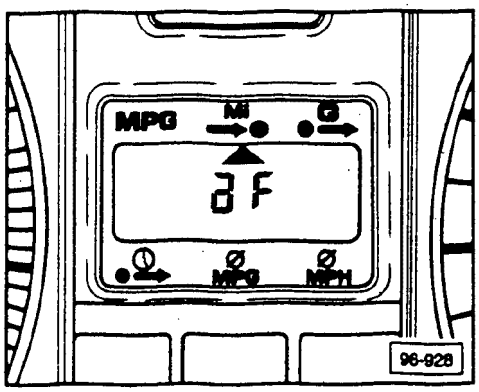

- push upper function selector switch and hold down

If no code is displayed,
- check average fuel consumption display

If fuel injection code **F** is displayed,
- check signal for fuel consumption indicator

- check function selector switch
- run engine at 3000 RPM for approximately 30 seconds
- repeat test

If fuel injection code **F** is displayed,
- check Board Computer

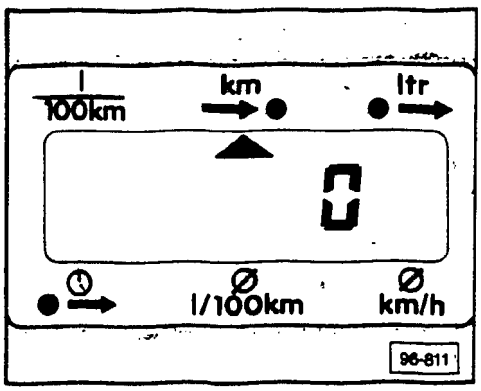

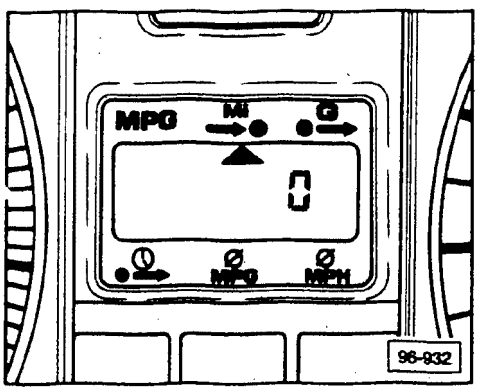

Fuel consumption correction factor, checking

- switch ignition **OFF**
- press and hold RESET button down
- switch ignition **ON**

- release RESET button
- push top function selector switch and hold down
  - fuel consumption factor is displayed

Note

Fuel consumption factor is calibrated to 0% at the factory. If percentage display is any figure other than 0%, it means that consumption percentage has been changed since vehicle left factory.

If fuel consumption factor is displayed,
- check Fuel Consumption from Start (●→ltr●→gal)

If fuel consumption factor is **NOT** displayed,
- check function selector switch
- repeat test

If the consumption correction factor is still not indicated,
- replace Board Computer

cardiagn.com

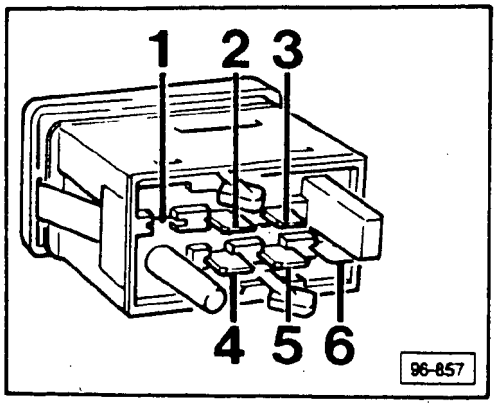

Function selector switch, checking

- unclip function selector switch from instrument panel
- remove electrical connector from switch
- connect multimeter **US 1119** set to ohm range between terminals **2** and **5**
  - must be infinite (∞) ohm (no continuity)
- press RESET button
  - must be 0.0 ohm (continuity)
- connect **US 1119** between terminals **5** and **4**
  - must be infinite (∞) ohm (no continuity)
- press top function selector button
  - must be 0.0 ohm (continuity)
- connect **US 1119** between terminals **5** and **6**
  - must be infinite (∞) ohm (no continuity)
- press bottom function selector switch
  - must be 0.0 ohm (continuity)

If specified values are **NOT** obtained,
- replace function selector switch
- connect multimeter **US 1119** set to volt range between terminals **6** and **3** of 6-point connector to function selector switch
- switch ignition **ON**
  - must be 12.0 volts
- switch ignition **OFF**

If specified value is **NOT** obtained,
- repair wiring according to wiring diagram

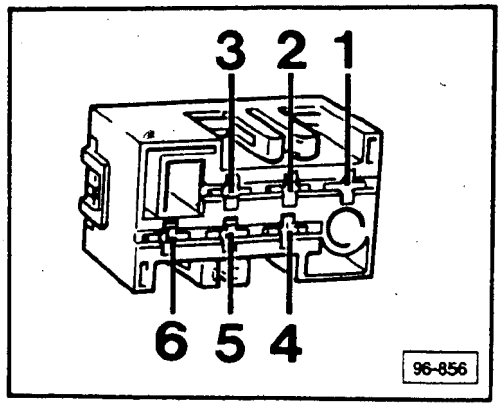

cardiagn.com

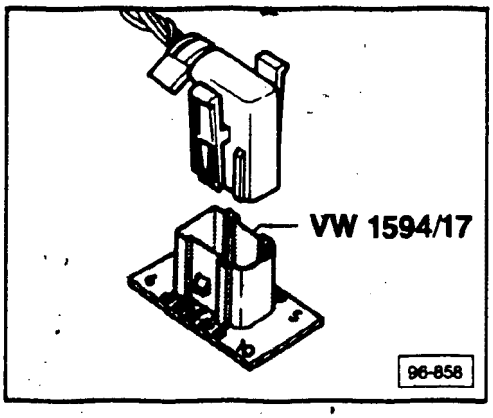

If all specified values **ARE** obtained,

- remove instrument cluster
- remove 10-point connector (black) of Board Computer from instrument cluster and connect to test adaptor **VW 1594/17**

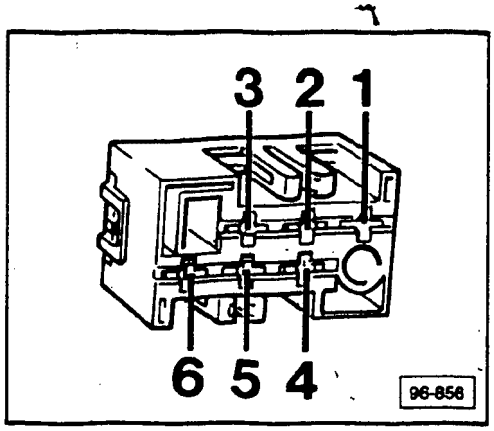

- set multimeter **US 1119** to ohm range
- connect **US 1119** between 6-point connector of function selector switch and 10-point connector of the Board Computer as follows:

6-point terminal	Test adaptor
5	**3**
3	**1**
2	**6**
6	**2**
4	**4**

- must be 0.2 ohm

If specified values are **NOT** obtained,

- repair wiring according to wiring diagram

If specified values are obtained and functions cannot be selected,

- reinstall 10-point connector on Board Computer
- check Board Computer

cardiagn.com

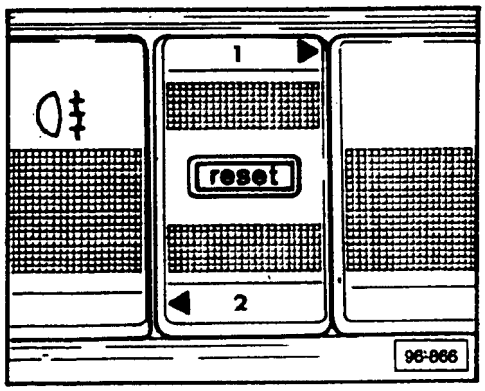

Board Computer, checking

- switch ignition **ON**
- select all computer functions in sequence pressing function selector switch (1) and (2)

Note

The upper function selector switch moves the display from left to right. The lower function selector switch moves the display from right to left.

If it is not possible to select all functions,
- check function selector switch
- repeat test

If it is still not possible to select all functions or display is dim,

- remove instrument cluster (do not disconnect electrical connectors)
- check day/night illumination

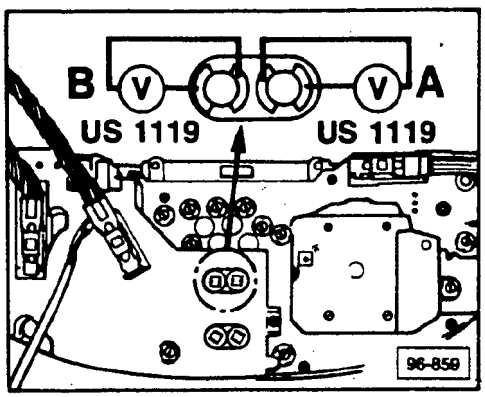

- connect multimeter **US 1119** set to 20 V range between connections for day illumination **A**
- switch ignition **ON**
  - must be approximately 12.0 V

- connect **US 1119** between connections for night illumination **B**
- switch headlights **ON** and turn dimmer to full bright position
  - must be approximately 12.0 V

If specified values are **NOT** obtained,
- repair open in wiring according to wiring diagram

If specified values **ARE** obtained,
- replace bulbs for day/night illumination

cardiagn.com

Function selector switch, operating

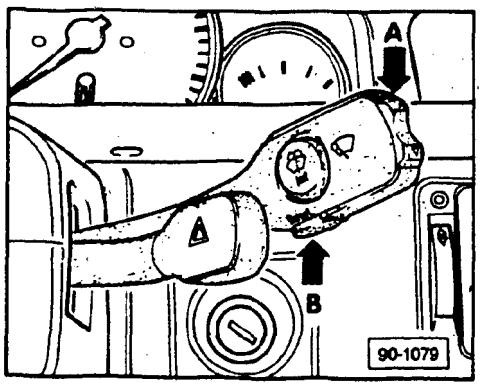

A — function selector switch
B — reset button

- select all computer functions in sequence by pressing upper or lower part of function selector switch **A**

Display sequence

- press upper part of switch to advance display line-by-line from right to left
- press lower part of switch to advance display line-by-line from left to right

If functions cannot be selected
- check function selector switch

If board computer functions are only weakly lit
- check day/night illumination bulbs

cardiagn.com

Board computer code, checking

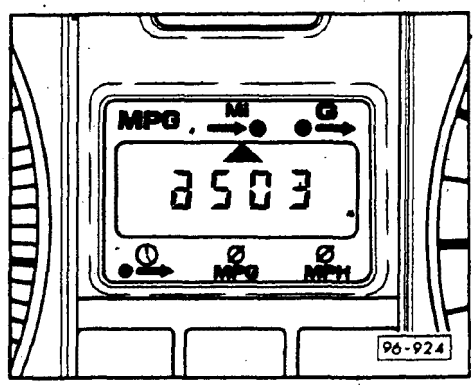

- switch ignition **OFF**
- press and hold **RESET** button
- switch ignition **ON** (while holding **RESET** button down)
  - ∂ and appropriate code displayed, see chart following

Computer codes

Vehicle	Coding Connector Part No.	Code Displayed
90 (USA)	893 919 100 H	503
80 Quattro (USA), 90 Quattro 20 V (USA, Canada)	893 919 100 G	523
Coupe Quattro 20 V (USA, Canada)	895 919 100 P	532

If correct code is displayed,
- switch ignition **OFF**
- check country code

If correct code is **NOT** displayed,
- check function selector switch
- repeat test

If correct code is still not displayed or displayed incorrectly,
- check consumption signal from fuel injection control unit

If correct code is still not displayed or displayed incorrectly,
- check Board Computer
- check coding connector for correct part number, see chart above

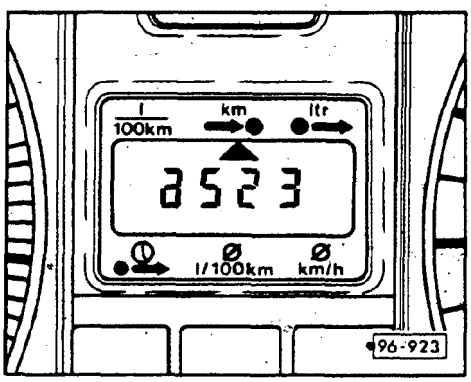

Note

The Board Computer display for Canada is illustrated at left. In the troubleshooting section, only the U.S. Board Computer display is shown. The values and data given are also applicable to the Board Computer for Canada.

cardiagn.com

Country code, checking

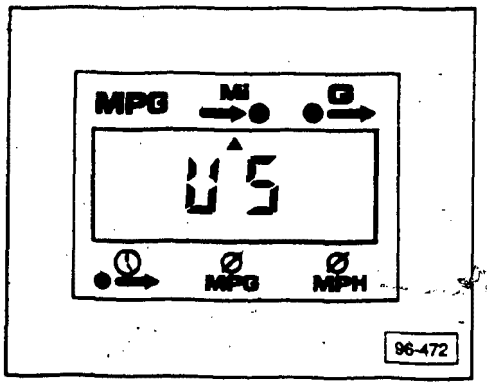

- switch ignition **OFF**
- press and hold **RESET** button
- switch ignition **ON**
- release **RESET** button

- press upper part of function selector switch and hold down
  - country code is displayed

    US for U.S.A. models

    CA for Canadian models

    SA for Saudi Arabian models

Note

The country codes for Canada (**CA**) and Saudi Arabia (**SA**) appear alternately approximately once per second.

If correct country code is displayed,

- check fuel injection code, following

If correct country code is **NOT** displayed

- replace Board Computer printed circuit board

Fuel injection code, checking

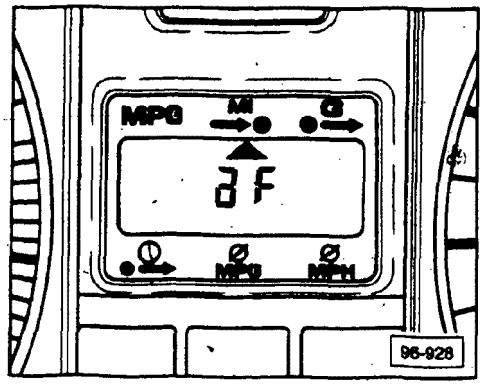

- switch ignition **OFF**
- press and hold down **RESET** button
- switch ignition **ON** (while holding reset button down)
- press lower function selection switch and hold down
- d and appropriate fuel injection code is displayed

  F for CIS-E III, MPI

If the correct fuel injection code is displayed

- switch ignition **OFF**
- check average speed display

cardiagn.com

If fuel injection code is **NOT** displayed or is incorrect,
- check fuel consumption signal
- check function selector switch
- run engine at 3000 RPM for approximately 30 seconds
- repeat test

If correct fuel injection code is still not displayed,
- check Board Computer

Fuel consumption correction factor, checking

- switch ignition **OFF**
- press and hold down **RESET** button
- switch ignition **ON** (while holding reset button down)
- release **RESET** button

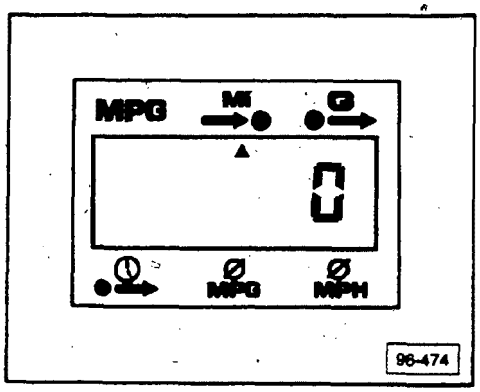

- press lower function selector switch and hold down
  - current fuel consumption correction factor is displayed

Note

Fuel consumption factor is calibrated to 0% at the factory. If percentage display is any figure other than 0%, it means that consumption percentage has been changed since vehicle left factory. The correction range lies between −15% and +15%.

If fuel consumption factor is displayed,
- check Fuel Consumption from Start (●→ltr●→gal)

If fuel consumption factor is **NOT** displayed,
- check function selector switch
- repeat test

If the consumption correction factor is still not indicated,
- replace Board Computer

cardiagn.com

Function selector switch, checking

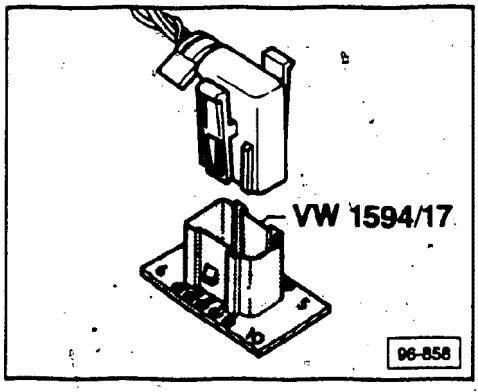

- remove instrument cluster
- connect test adaptor **VW 1594/17** to 10-point connector
- set multimeter **US 1119** to ohmmeter scale
- connect multimeter **US 1119** between terminals **6** and **3**
  - must be infinite (∞) ohms (no continuity)
- press **RESET** button
  - must be 0 ohms (continuity)
- connect multimeter **US 1119** between terminals **3** and **2**
  - must be infinite (∞) ohms (no continuity)
- press upper function selector switch
  - must be 0 ohms (continuity)
- connect multimeter **US 1119** between terminals **3** and **4**
  - must be infinite (∞) ohms (no continuity)
- press lower function selector switch
  - must be 0 ohms (continuity)

If one of the specified values is **NOT** obtained

- repair break in wiring according to wiring diagram

OR

- replace function selector switch

cardiagn.com

Board Computer, checking

- switch ignition **ON**
- select all computer functions in sequence by pressing function selector switch up and down

Note

The upper function selector switch moves the display from right to left. The lower function selector switch moves the display from left to right.

If it is not possible to select all functions,
- check function selector switch
- repeat test

If it is still not possible to select all functions or display is dim,

- remove instrument cluster (do not disconnect electrical connectors)
- check day/night illumination as follows:

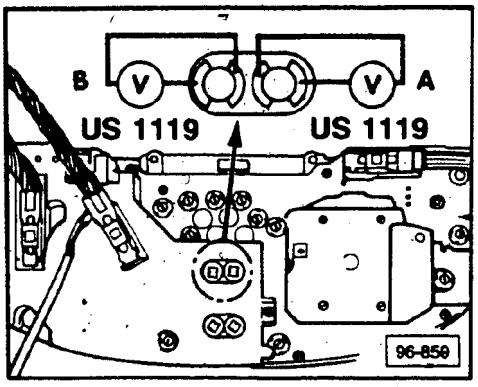

- connect multimeter **US 1119** set to 20 V range between connections for day illumination **A**
- switch ignition **ON**
  - must be approximately 12.0 V
- switch ignition **OFF**
- connect multimeter **US 1119** between connections for night illumination **B**
- switch parking lights **ON** and turn dimmer to full bright position
  - must be approximately 12.0 V

If specified values are **NOT** obtained,
- repair break in wiring according to wiring diagram

If specified values **ARE** obtained,
- replace bulbs for day/night illumination

cardiagn.com

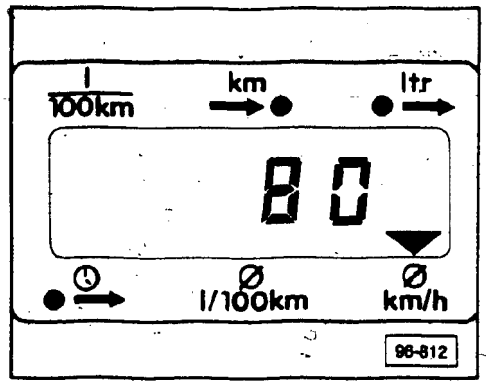

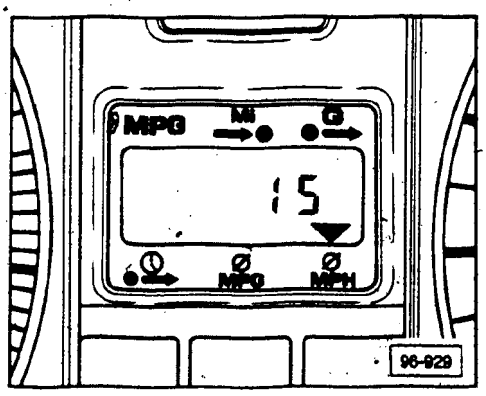

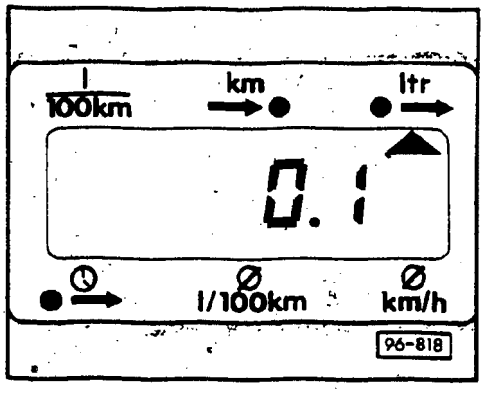

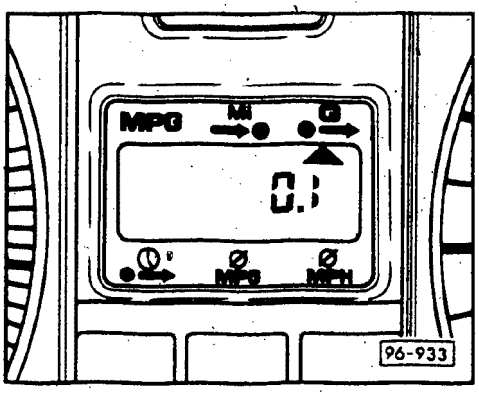

Average speed display, checking (Ø km/h or Ø MPH)

- switch ignition **ON**
- select average speed display with function selector switch

If average speed display cannot be selected,
- check function selector switch

- drive vehicle and push RESET button for at least 2 seconds
  - instantaneous speed is indicated

If instantaneous speed is indicated,
- check average fuel consumption indicator (Ø ltr/100 km or Ø MPG)

If instantaneous speed is **NOT** indicated,
- check that instantaneous speed is displayed on speedometer

If instantaneous speed is displayed on speedometer,
- repair open in wire to Board Computer according to wiring diagram

If instantaneous speed is **NOT** displayed on speedometer,
- check speedometer speed sensor

Fuel consumption since start, checking (ltr ●→, Gal ●→)

- switch ignition **ON**
- select Fuel Consumption from start with function selector switch
- drive vehicle and let coast
- push RESET button for 2 seconds

After approximately 5 km or 3 miles, fuel consumed is indicated
- 0.1 to 0.8 liter **OR**
- 0.1 to 0.3 gal

If fuel consumption from start is **NOT** displayed,
- check fuel consumption signal
- repeat test

If fuel consumption is still not indicated,
- replace Board Computer

cardiagn.com

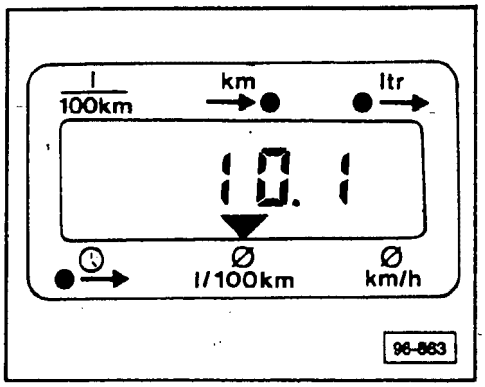

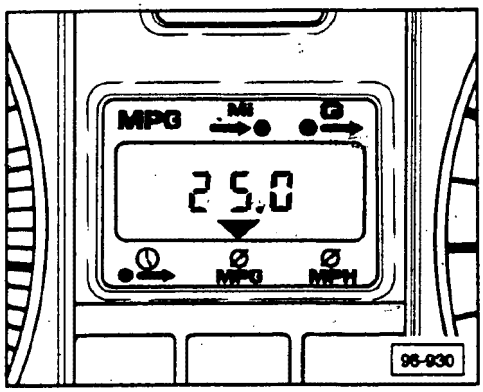

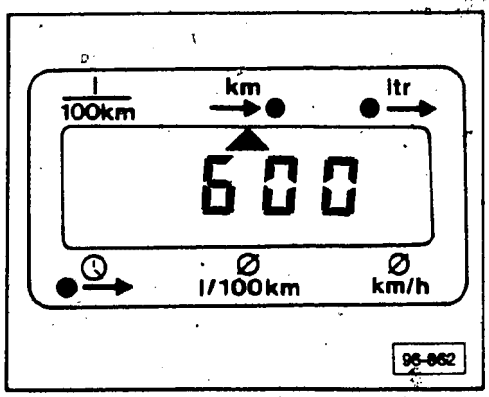

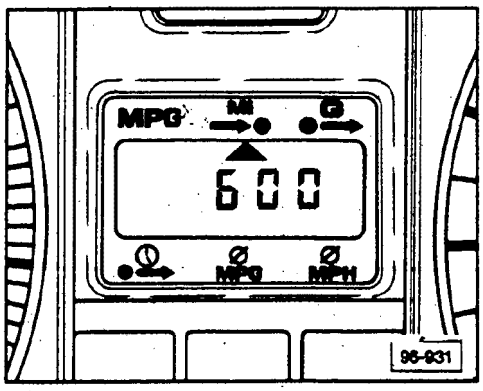

Average fuel consumption display, checking (0 l/100 km or 0 MPG)

- switch ignition **ON**
- select average fuel consumption display (Ø ltr/100 km or Ø MPG)
- drive vehicle and press RESET button for at least 2 seconds
  - instantaneous average fuel consumption is displayed

If instantaneous average fuel consumption is displayed,
- check range reading (miles to empty)

If instantaneous average fuel consumption display increases after releasing reset button from approximately 15 to 51 ltr/100 km or 5 MPG **OR** 0 ltr/100 km or 2000 MPG is displayed,
- check fuel consumption signal on terminal 10 of 10-point connector of Board Computer

Range reading (km ⟶● or Mi ⟶●), checking

Note

The computer calculates range (miles to go) against an average consumption of 10 ltr/100 km even if the Board Computer display is in USA measure of units.

Example: 60 liters of fuel in tank will indicate 600 km range (miles to go)

cardiagn.com

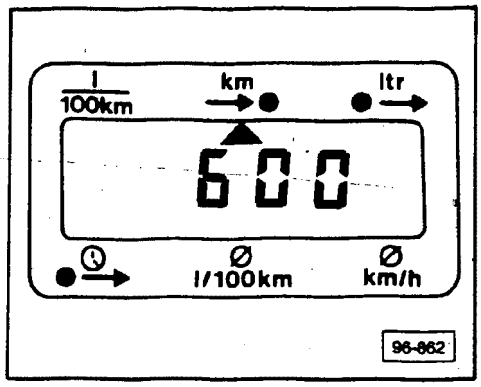

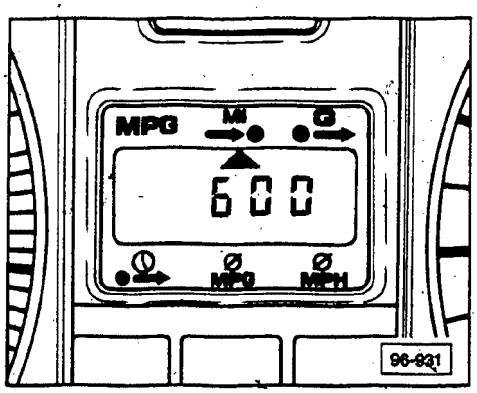

Range reading (km ⟶● or MI ⟶●), checking continued

- switch ignition **OFF**
- press and hold RESET button
- switch ignition **ON**
- release RESET button
  - tank contents X 10 is indicated

If tank contents X 10 is displayed,
- check adjusted consumption correction factor

If tank contents X 10 is **NOT** displayed,
- check that fuel level is displayed on fuel gauge in instrument cluster

If fuel level is **NOT** displayed on fuel gauge in instrument cluster,
- check fuel level sending unit

If fuel level is displayed on fuel gauge in instrument cluster,
- check voltage supply and output signals to Board Computer

If no open circuits are found,
- replace Board Computer

cardiagn.com

Board Computer voltage supply and output signal, checking

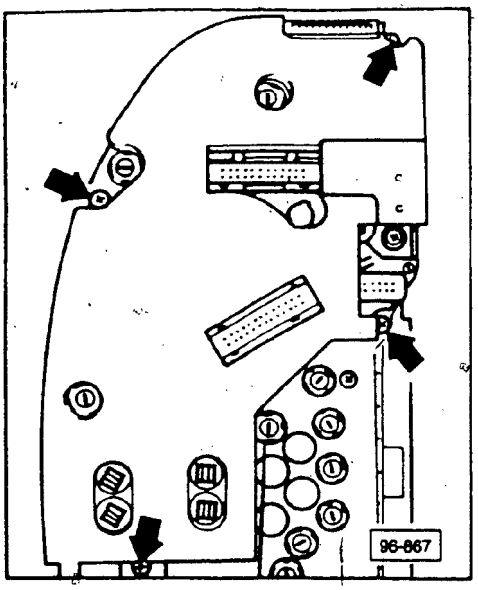

- disconnect battery ground strap
- remove instrument cluster
- remove 26-point connector (yellow)
- remove 10-point connector (black) from Board Computer

Note

On vehicles with Auto-Check system,
- remove 26-point connector (white) from instrument cluster
- remove module retaining screws (**arrows**)

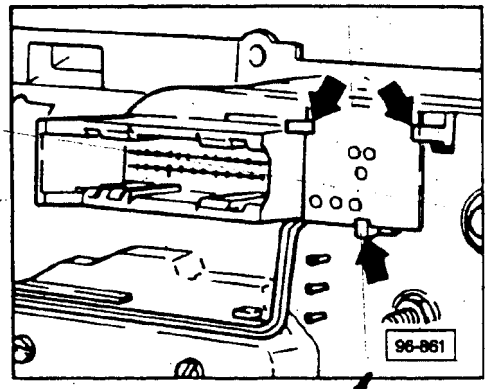

- unclip range calibration potentiometer and carefully remove Board Computer module
- attach battery ground cable
- attach 26-point connector (yellow) to instrument cluster

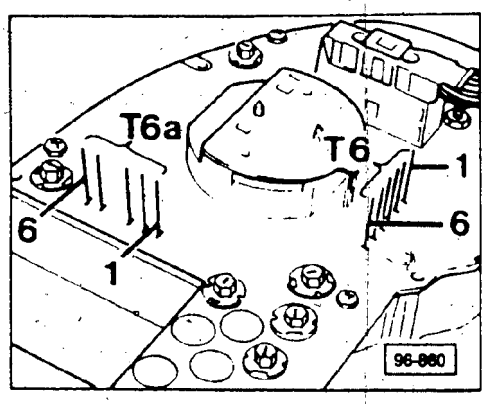

- connect multimeter **US 1119** set to volt range between terminals **T6/6** and **T6a/3**
  - must be approximately 12.0 V
- connect **US 1119** between terminals **T6a/2** and **T6a/3**
- switch ignition **ON** and leave **ON** during remaining tests
  - must be approximately 12.0 V
- connect **US 1119** between terminals **T6/1** and **T6a/3**
  - must be 9.75 V-10.3 V

If specified values are **NOT** obtained,
- repair open in wiring according to wiring diagram or check voltage stabilizer

cardiagn.com

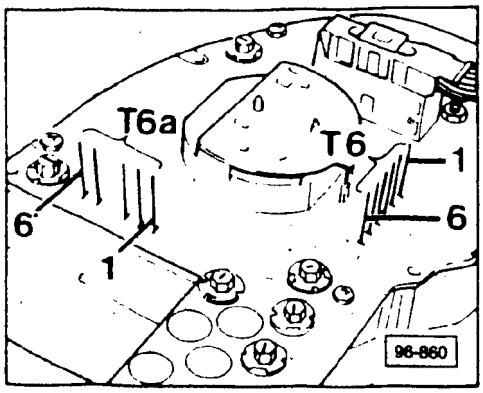

- connect **US 1119** between terminals **T6/1** and **T6/2**
  - must be 1.5 V-6.0 V (depends on fuel tank level)

If specified values are **NOT** obtained,
- repair open in wiring according to wiring diagram or check fuel level gauge

- connect **US 1119** between terminals **T6/4** and **T6a/3**
- switch parking lights **ON**
  - must be approximately 12.0 V

- connect **US 1119** between terminals **T6/5** and **T6a/3**
- switch parking lights **ON** and turn instrument panel light dimmer to full bright position
  - must be approximately 12.0 V

If the specified values are **NOT** obtained,
- repair open in wiring according to wiring diagram

- connect **US 1119** between terminals **T6a/1** and **T6a/3**
  - must be 0.0 V-4.0 V

- start motor and let idle
  - must be 14.0 V

If specified values are **NOT** obtained,
- repair open in wiring according to wiring diagram or check alternator output

On vehicles without Auto-Check System,

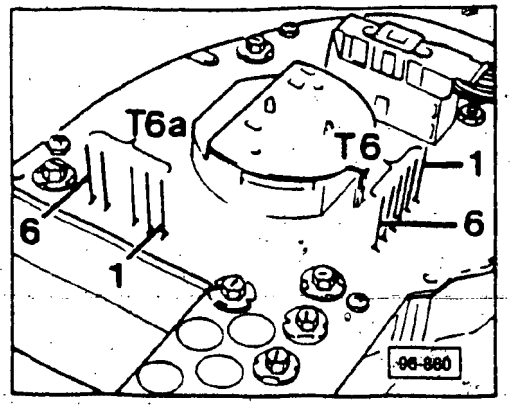

- connect **US 1119** between terminals **T6a/2** and **T6a/5** (only on vehicles without Auto-Check system)
- press brake fluid level switch on brake fluid reservoir
  - must be 12.0 V

cardiagn.com

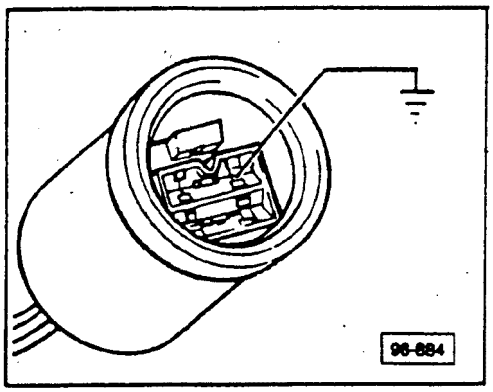

- connect **US 1119** between terminals **T6a/2** and **T6a/6**
- remove connector from electronic thermoswitch
- connect blue/white (Bl/W) wire to ground
  - must be 12.0 V

If the specified values are **NOT** obtained,

- repair open in wiring according to wiring diagram

Speed signal, checking

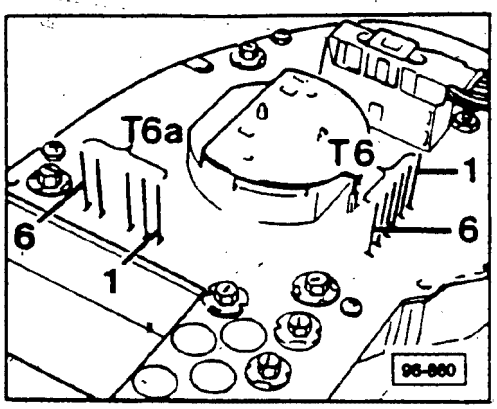

- connect multimeter **US 1119** set to ohm range between **T6/3** and **T6a/3**
- place transmission in neutral and apply parking brake
- secure vehicle with wheel chocks to prevent rolling
- raise left front of vehicle at proper lift point until wheel turns freely
- place jack stand under vehicle for safety
- slowly rotate wheel
  - reading must alternate between 0.0 ohm (continuity) and ∞ ohm (no continuity)

If specified values are **NOT** obtained,

- repair open in wiring according to wiring diagram **OR** replace speed sensor

Note

If the specified values from the tests on previous two pages are **NOT** obtained and wiring is not damaged,

- replace Board Computer

If specified values **ARE** obtained,

- connect modules to instrument cluster
- switch ignition **ON**

If the coolant warning temperature light or brake fluid level warning light do not flash,

- replace light bulbs

If warning lights still do not flash,

- replace Board Computer or computer module

cardiagn.com

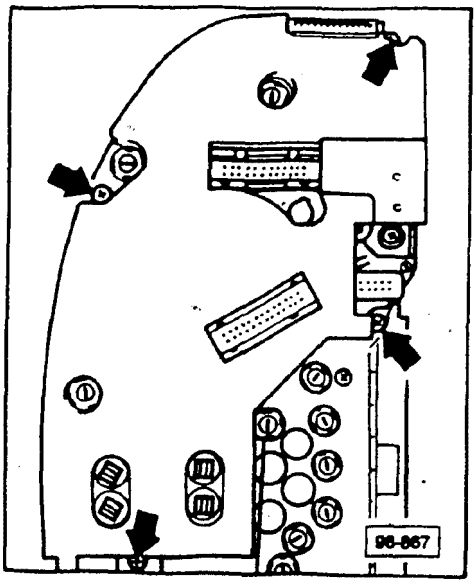

Board Computer or computer module, removing/installing from instrument cluster

- disconnect battery ground cable
- remove instrument cluster
- remove all electrical connectors from instrument cluster
- remove Board Computer retaining screws (**arrows**)

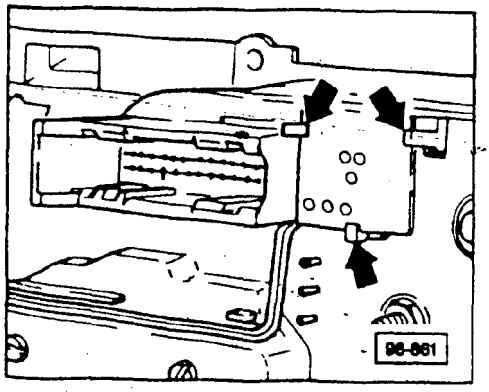

- unclip (**arrow**) range calibration potentiometer and remove

Board Computer, removing/installing from module (only vehicles with Auto-Check system and defective Board Computer)

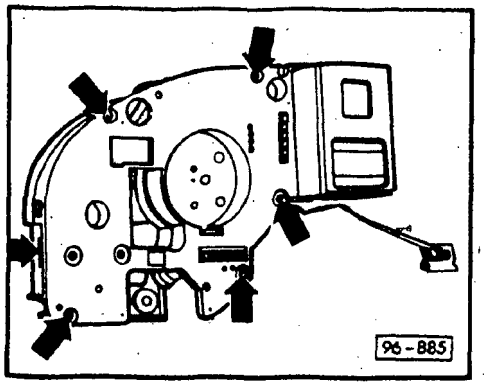

- remove coding terminal Board Computer
- remove nuts (**arrows**)
- carefully separate module halves without twisting

Note

Store module halves so they are not damaged or become contaminated.

During installation, be sure that module halves are not damaged or distorted.

cardiagn.com

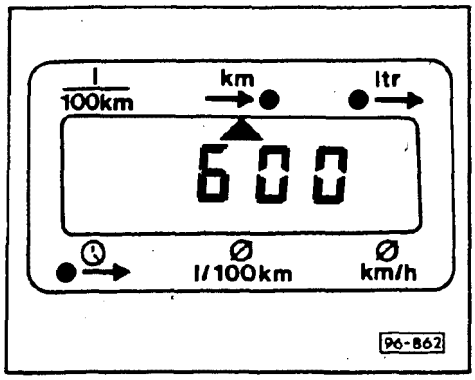

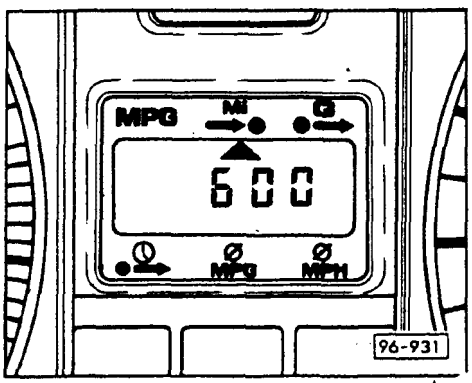

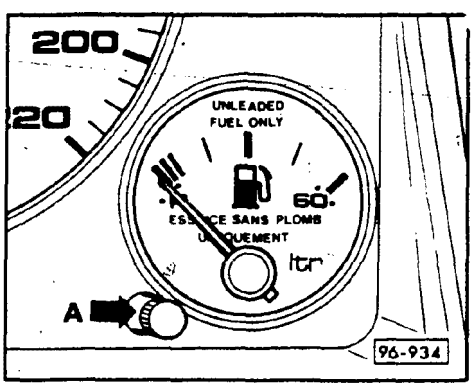

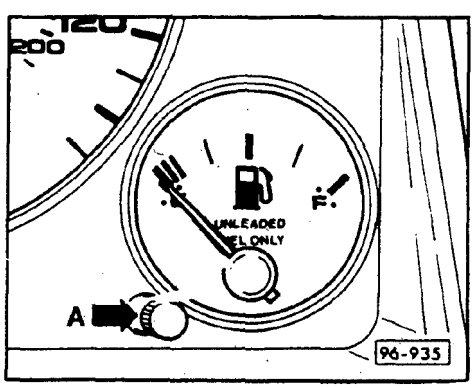

Board Computer, range calibration

CAUTION

Range calibration is done **ONLY** after the following repair work:

- replacing fuel gauge or fuel gauge sender
- replacing computer

The range calibration is done **ONLY** with a full fuel tank.

The computer calculates fuel consumption based on 10 L/100 km regardless if the computer display is in US or metric measurement units.

- switch ignition **OFF**
- press and hold RESET button
- switch ignition **ON** (while holding RESET button down)
- release RESET button
  - Board Computer display must show 500-700 (depending on vehicle)

If specified value is **NOT** displayed,

- adjust range calibration as follows:
- remove cap **A** from instrument cluster
- insert small flat blade screwdriver and turn adjusting screw

CAUTION

Range calibration screw can only be turned 1/2 turn at a time between stops.

- adjust range calibration value according to following:

Audi 90	= approximately 550
Audi 80/90 Quattro	= approximately 650
Audi 90 Quattro 20 V	= approximately 650
Audi Coupe Quattro 20 V	= approximately 650

If the range calibration was not correct during first measurement,

- check fuel gauge calibration
- repeat range calibration test

If specified range calibration is still **NOT** obtained,

- replace Board Computer

cardiagn.com

CONTINUED IN THE

BEGINNING OF NEXT ROW

cardiagn.com

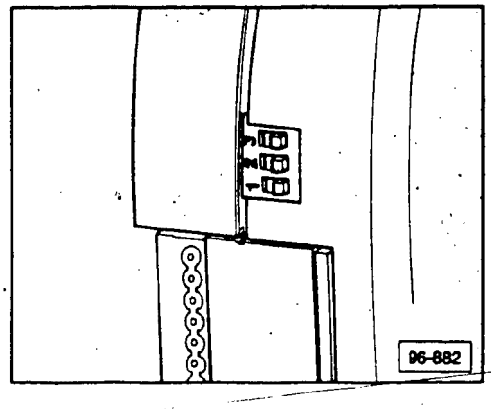

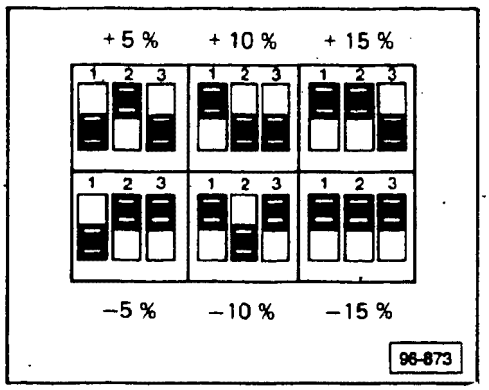

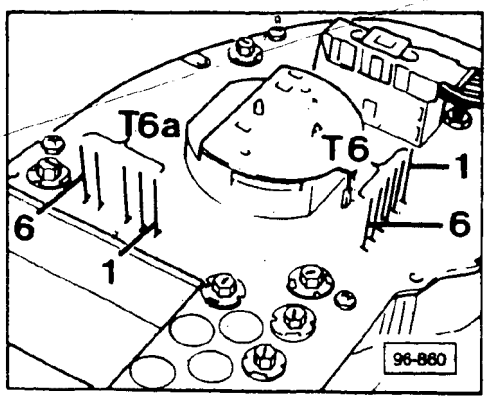

Fuel consumption factor, correcting

It is possible to adjust the Board Computer if average fuel consumption measured by the driver varies by more than 5% from the average fuel consumption calculated by the Board Computer.

A total ± 15% correction can be made.

- remove instrument cluster but do not remove electrical connectors
- select corresponding correction range with the three sliding switches

Fuel gauge display, checking

- remove trim cover from luggage compartment floor
- remove cover from fuel gauge sender
- remove connector from fuel gauge sender
- connect multimeter **US 1119** set to 20 V range between connector terminals
- switch ignition **ON**
  - must be 9.75 V-10.3 V

If specified values are **NOT** obtained,
- repair open in wiring according to wiring diagram **OR**
- replace voltage stabilizer
- connect **VW 1301** to fuel gauge sender connector terminals
- remove instrument cluster (leave electrical connectors connected)
- remove Board Computer module
- connect multimeter **US 1119** set to 20 V range between terminals **T6/1** and **T6/2**
- switch ignition **ON**
- adjust **VW 1301** as follows:
  544 - **US 1119** reads 1.5 V
  60 - **US 1119** reads 5.5 V

cardiagn.com

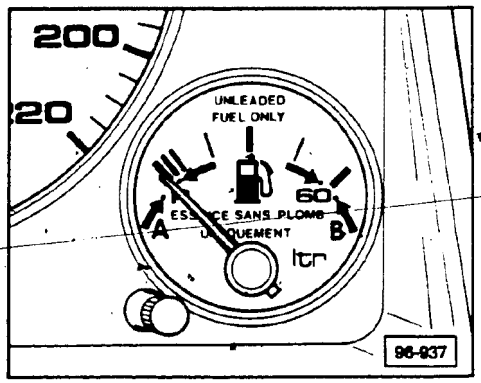

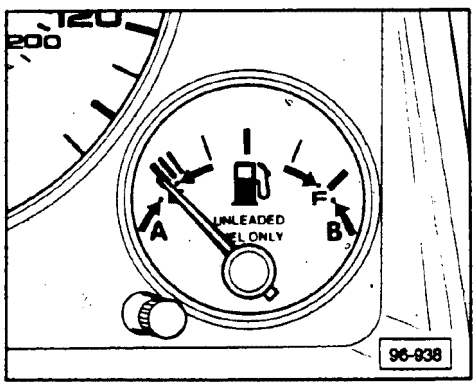

Fuel gauge needle must be within tolerance ranges **A** and **B** (**arrows**)

A = **VW 1301** at 544, **US 1119** reads 1.5 V
B = **VW 1301** at 60, **US 1119** reads 5.5 V

If specified values are **NOT** obtained,
- adjust fuel gauge

If adjustment not obtainable,
- check voltage supply and voltage stabilizer

If **OK**,
- replace fuel gauge

cardiagn.com

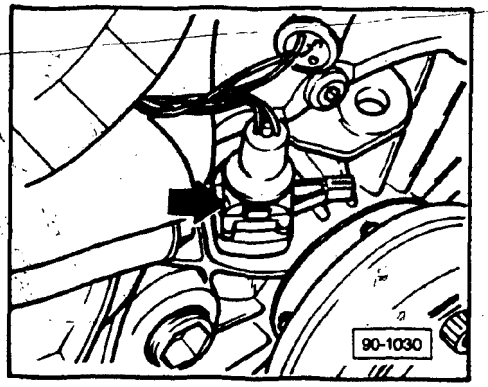

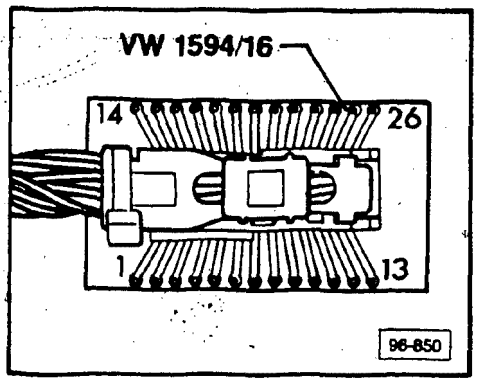

Speed sensor, checking

Note

Sensor is located on left side of transmission near drive shaft flange.

- remove instrument cluster
- remove 26-point connector (blue) from instrument cluster and insert in test adaptor **VW 1594/16**
- connect **US 1119** between terminals **20** and **21**
- set **US 1119** to ohm scale
- place transmission in neutral and apply parking brake
- secure vehicle with wheel chocks to prevent rolling
- raise left front of vehicle at proper lift point until wheel turns freely
- place jack stand under vehicle for safety
- slowly rotate wheel
  - reading on **US 1119** must vary between 0.0 ohm and infinity

If specified value is not obtained,
- repair wiring according to current flow diagram **OR**
- replace defective speed sensor

cardiagn.com

Speed sensor, checking (vehicles with auto trans.)

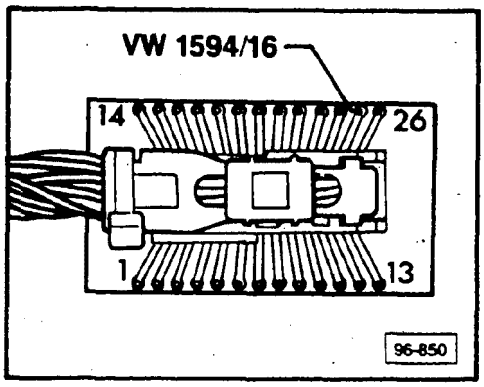

Note

Sensor is located on left side of transmission near drive shaft flange.

- remove instrument cluster
- remove 26-point connector (blue) from instrument cluster and insert in test adaptor **VW 1594/16**
- set multimeter **US 1119** to 20 V range
- connect red test lead of **US 1119** to terminal **16** and black test lead to terminal **20**
- switch ignition **ON**
- roll vehicle forwards and backwards approximately 4 feet
  - voltage must vary between 0 and 12 volts (pulsing DC voltage)

If not **OK**

- check for break in wiring using wiring diagram

OR

- replace speed sensor

cardiagn.com

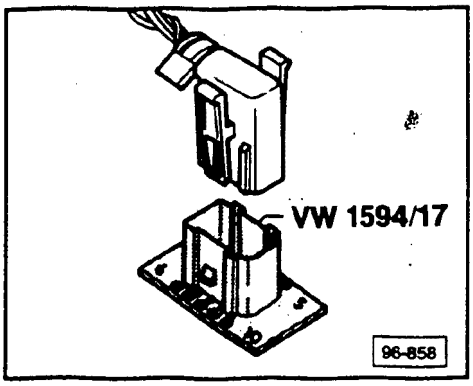

Fuel consumption signal from fuel injection control unit, checking

- remove instrument cluster
- remove 10-point connector (black) from instrument cluster and insert in **VW 1594/17**
- connect **US 1119** set to 2 V range between terminal **10** and engine ground
- start engine and let idle
- raise and lower idle speed between 1000 and 4000 RPM
  - must be 0.3 V-0.8 V (depending on RPM)

If the specified value is **NOT** obtained,
- repair open wire between fuel injection control unit and 10-point connector for Board Computer according to wiring diagram

If the specified value is obtained but there is no fuel consumption display,
- replace Board Computer module

cardiagn.com

THIS FRAME INTENTIONALLY LEFT

BLANK

cardiagn.com

Signal Reception

Audi 80/90 models are equipped with two window antennas.

AM radio signals are received only by the antenna mounted in the rear window.

FM radio signals are received by both the front windshield antenna and the rear window antenna. The radio tunes in to the FM signal that is the strongest.

If radio reception disturbances occur during radio operation,

- remove radio from center console
- check that the 7.5 A fuse in the back of the radio is **OK**
- check that all wires are properly connected, 91.23

If there is no AM reception,
- check rear antenna amplifier, 91.27

If there is no AM or FM reception,
- check front antenna amplifier, 91.25
- check rear antenna amplifier, 91.27

cardiagn.com

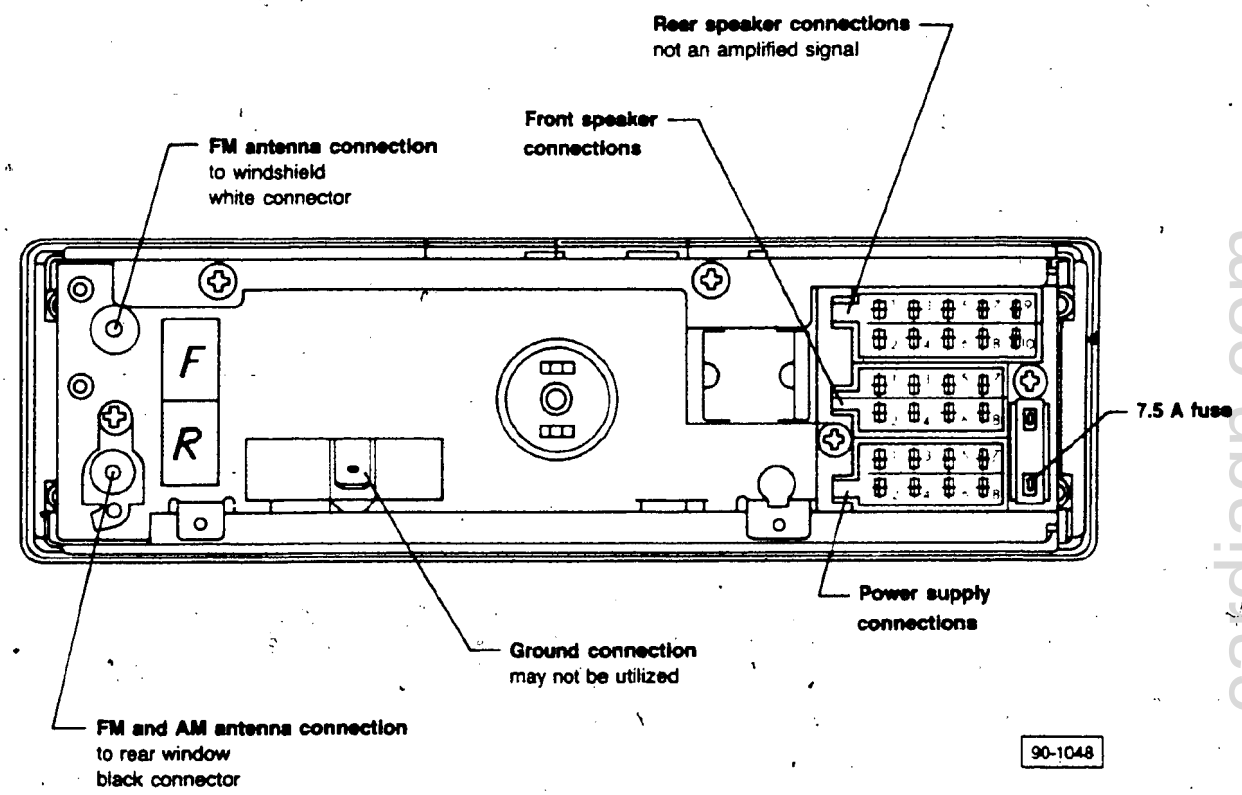

cardiagn.com

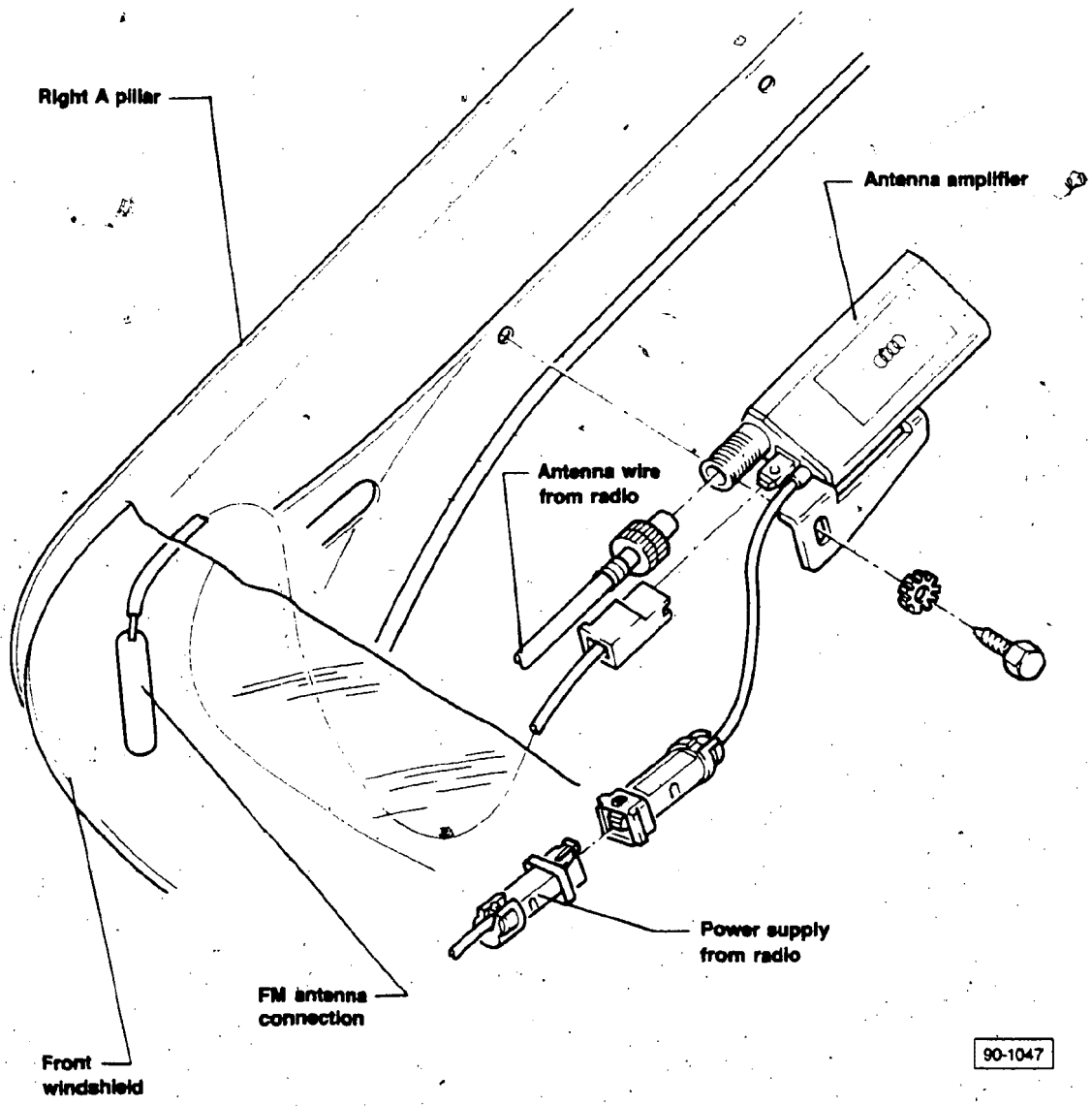

cardiagn.com

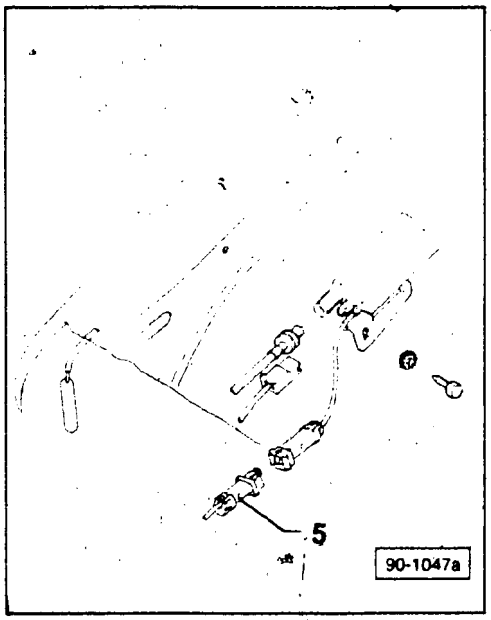

Front antenna, checking

Test requirements

- battery **OK**
- remove right **A** pillar cover
- remove connector **5**
- connect voltmeter between connector **5** and ground
- switch radio **ON**
  - approximately battery voltage

If **NO**,

- repair break in wiring according to current flow diagram

If specified value is obtained,

- replace antenna amplifier

cardiagn.com

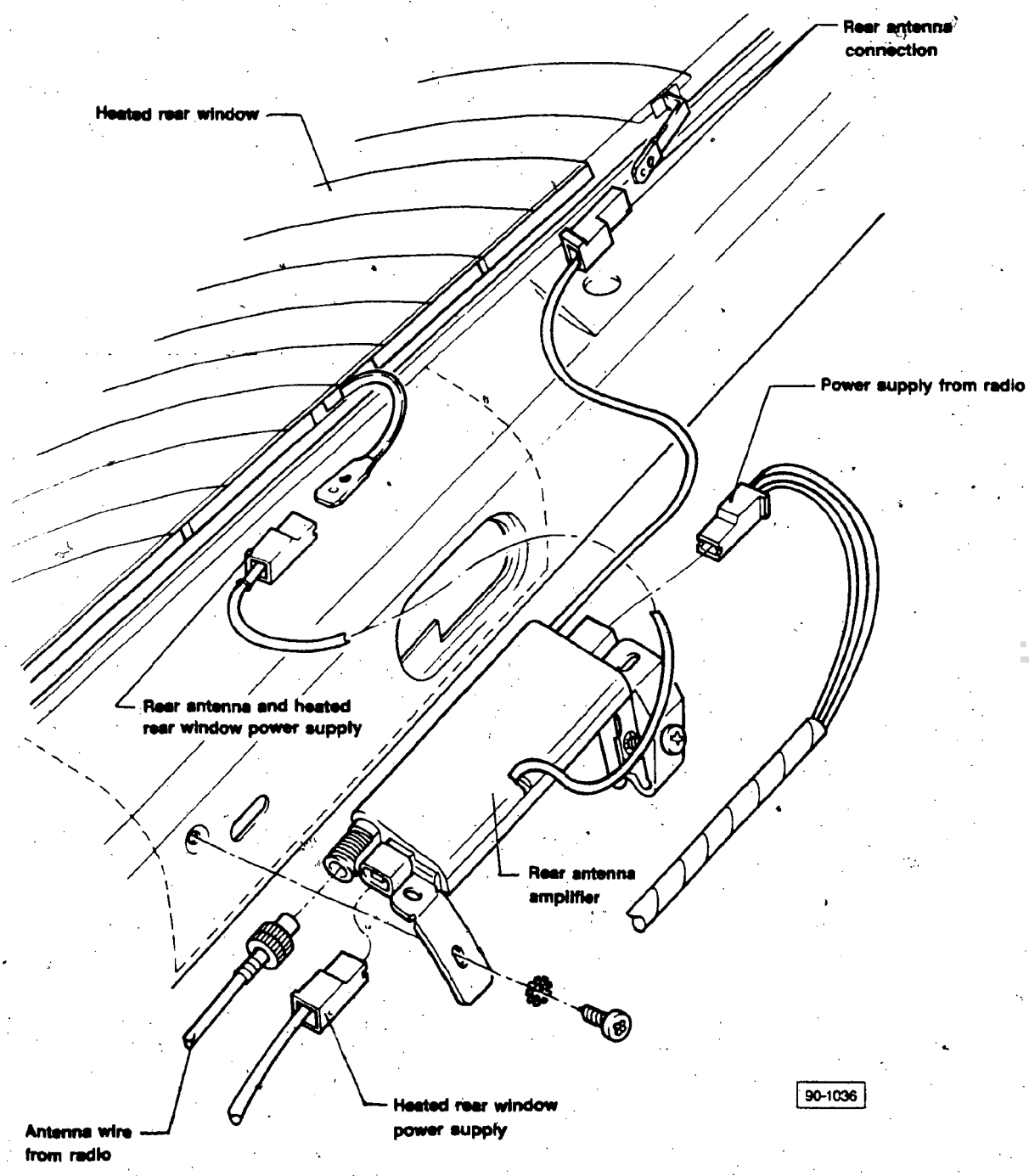

cardiagn.com

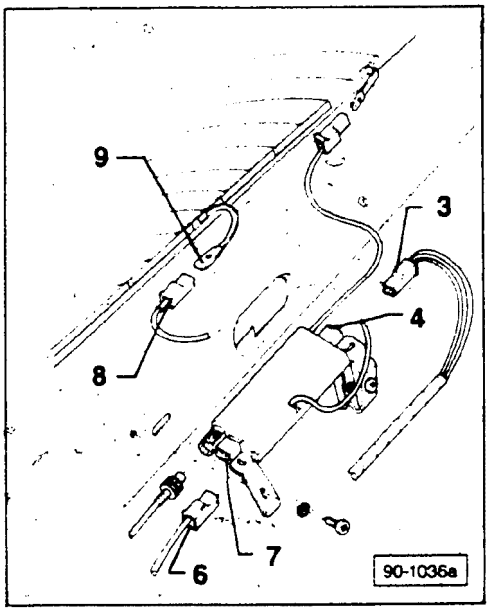

Rear antenna, checking

Check these first:
- battery **OK**
- fuse **S16 OK**

- remove right and left **D** pillar trim panels
- check heated rear window ground connection for tightness

- remove connector **3**
- connect voltmeter between connector **3** and ground
- switch radio **ON**
  - approximately battery voltage

If **NO**
- repair break in wiring according to current flow diagram

With connector **3** still removed and ignition **ON**,
- measure current between connector **3** and rear antenna amplifier at **4**
  - 30-50 mA

If **NO**
- replace rear antenna amplifier

- remove connector **6** from antenna amplifier
- connect voltmeter between connector **6** and ground
- switch ignition **ON**
- switch heated rear window **ON**
  - approximately battery voltage

If **NO**
- repair break in wiring according to current flow diagram

With connector **6** still removed and ignition **ON**,
- measure current between connector **6** and rear antenna amplifier at **7**
  - 13.0-13.5 A

If **NO**
- repair break in wiring according to current flow diagram or check rear window heater elements

cardiagn.com

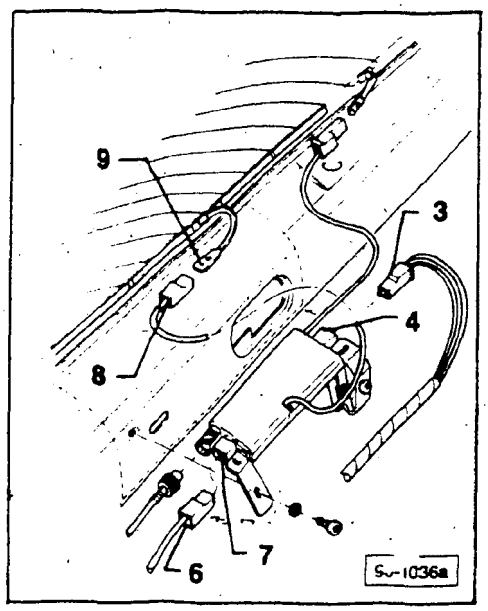

- remove connector **8** from heated rear window
- connect voltmeter between connector **8** and ground
- switch ignition **ON**
- switch heated rear window **ON**
  - approximately battery voltage

If **NO**,
- repair break in wiring according to current flow diagram

If specified value is obtained,
- replace rear antenna amplifier

With connector **8** still removed and ignition **ON**,
- measure current between connector **8** and rear window heat elements at **9**
  - 13.0-13.5 A

If **NO**,
- repair break in wiring according to current flow diagram **OR** check rear window heater elements

cardiagn.com

Wiesbaden fixed coded radio

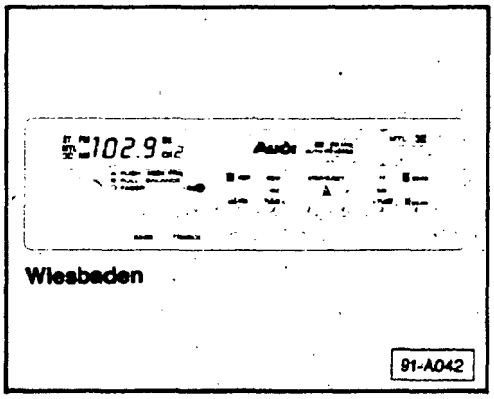

Overview

As of model year 1990, Wiesbaden radios are assigned a fixed four digit security code from the factory. Unlike previous coded radios, **the security code cannot be changed.**

The fixed coded radios have been implemented gradually and can be identified by the part number. A part number label is attached to the radio chassis.

Wiesbaden — Part No. **893 035 180A**

> **CAUTION**
>
> Part numbers are for reference only. Always check with your Parts Department for latest information.

The radios are not coded at the factory. To activate the theft protection, the radio must be coded during the Pre-Delivery Inspection.

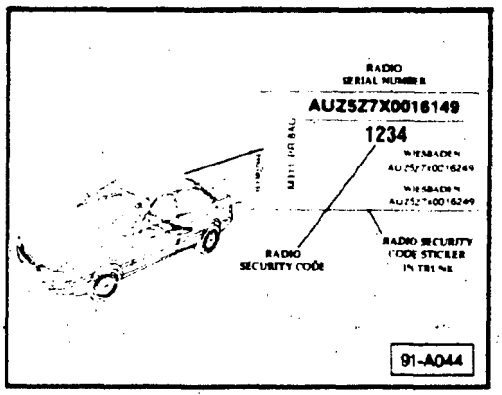

The security code and serial number of the radio are printed on a removable sticker located in the trunk near the vehicle identification sticker.

Coding a new or remanufactured radio

- remove radio security code/serial number sticker from trunk and attach to radio card in operating instructions manual

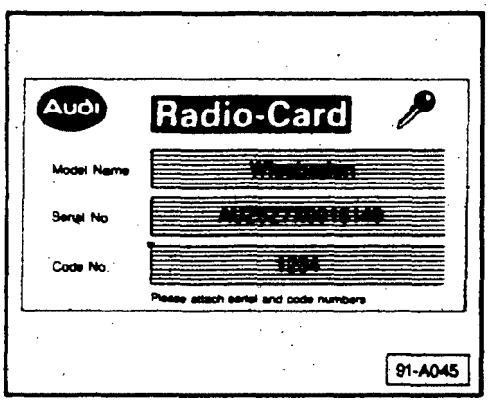

> **CAUTION**
>
> **DO NOT** keep the security code or radio card with the vehicle. Always instruct customers to detach radio card from operating instructions manual and keep in a safe place.

cardiagn.com

Note

The security code/serial number sticker for remanufactured replacement radios comes in the box with the new radio. Place the new sticker over the old sticker on the radio card.

- switch radio **ON**
  - radio plays and radio station frequency is displayed
- push and hold **AM/FM** and **SCAN** buttons
  - radio display changes to **CODE** and then **1000**
- release **AM/FM** and **SCAN** buttons
  - **1000** will remain on display
- enter radio's security code using first four program station buttons
  - security code will appear on display
- push and hold **AM/FM** and **SCAN** buttons once again until display changes to **SAFE**

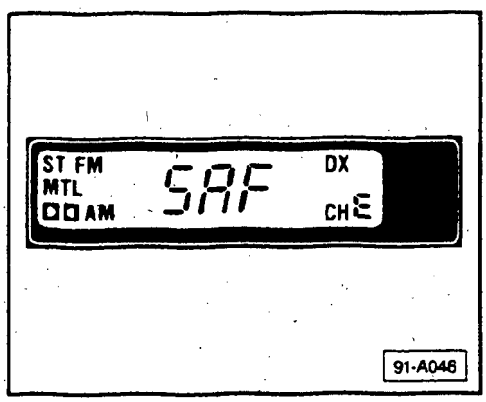

Note

A new or remanufactured radio will only accept its factory assigned security code. If an incorrect code is entered, the radio display will not change to **SAFE**.

- release **AM/FM** and **SCAN** buttons
  - radio display changes to a radio station frequency
  - radio is now coded

Reactivating radio after reconnecting power

After disconnecting power (fuse, battery, etc.), the radio will lock up electronically.

To reactivate:

- obtain radio's security code
  - located on radio card
- switch radio **ON**
  - radio will not play
  - radio display shows **SAFE**

cardiagn.com

- push and hold **AM/FM** and **SCAN** buttons
  - display changes to **1000**
- release **AM/FM** and **SCAN** buttons
  - **1000** remains on display

Note

If the **AM/FM** and **SCAN** buttons are held down too long or pushed again, the radio will misinterpret the **1000** as an attempt at coding and one incorrect attempt will be logged.

- enter radio's security code using first four program station buttons
  - security code will appear on display
- push and hold **AM/FM** and **SCAN** buttons once again until display changes to **SAFE**
- release **AM/FM** and **SCAN** buttons
  - radio display changes to a radio station frequency
  - radio is now coded and plays

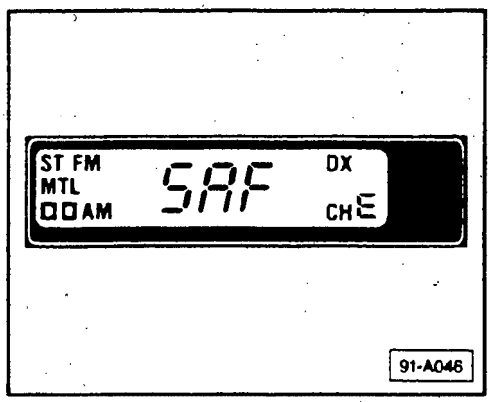

Unlocking an electronically locked radio

After two incorrect attempts at entering the security code, the radio will lock-up electronically. The display shows **SAFE** and will not change.

To unlock:

- leave radio switched **ON** for approximately one hour
- after one hour, reactivate (code) radio as it would be after a power interruption

Note

The radio will never permanently lock-up no matter how many incorrect coding attempts are made. The reactivation procedure can be repeated indefinitely.

cardiagn.com

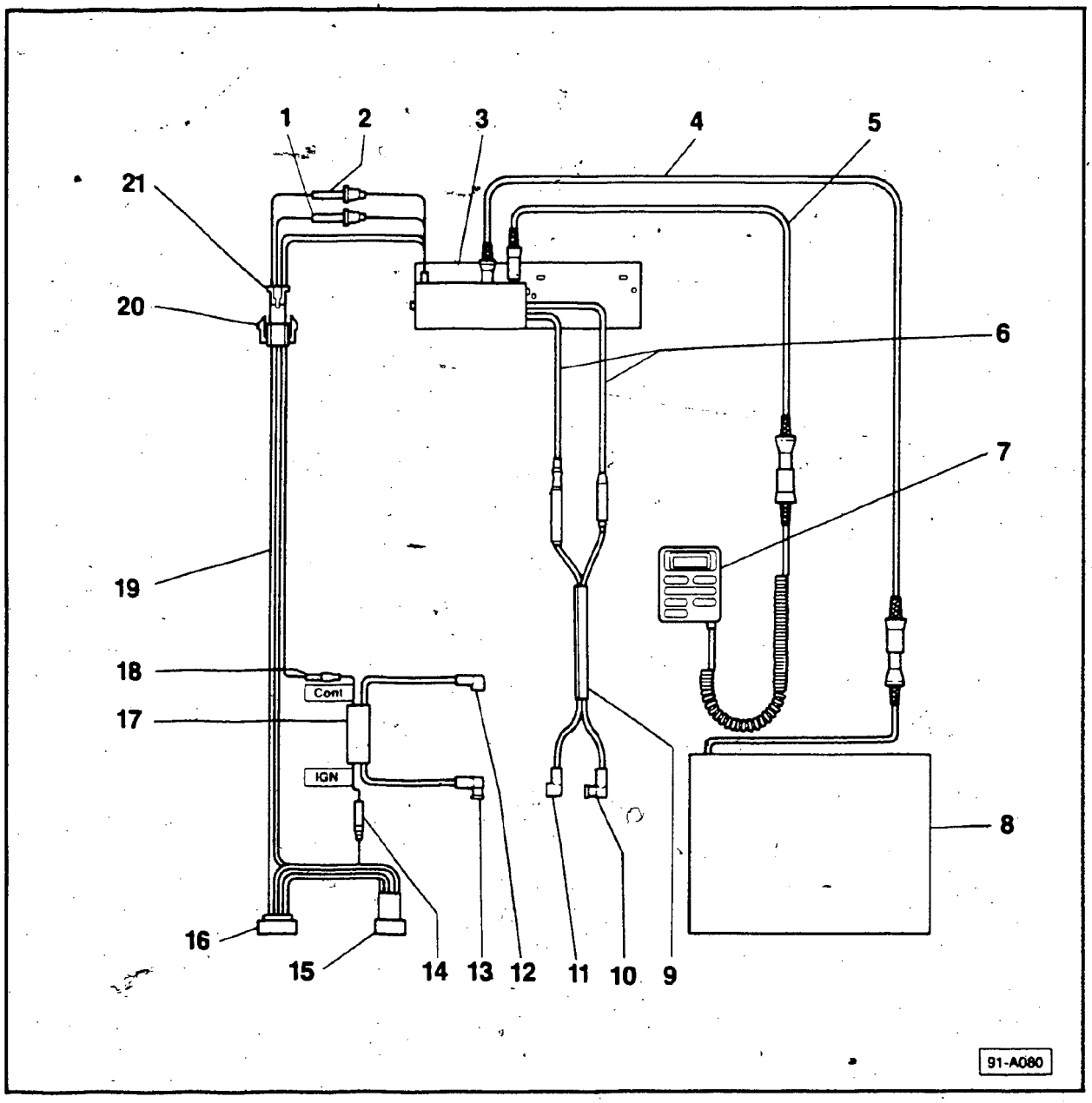

Note

For complete wiring information, see Wiring Diagram.

1 — **Fuse, 3A**

2 — **Fuse, 1A**

3 — **CD changer controller**
installed on driver's side knee bar

4 — **CD changer unit cable**
DIN, blue

5 — **CD remote control cable**
DIN, black

6 — **Antenna cables**

7 — **CD remote control**

8 — **CD changer unit**
- six disc capacity
- installed in trunk

9 — **Antenna adaptor cable (assembly)**

10 — **Rear antenna connector**
to rear antenna lead

11 — **Rear antenna connector**
connects to radio

12 — **Front antenna connector**
connects to radio

cardiagn.com

13 — **Front antenna connector**
to front antenna lead

14 — **Single-point bullet connector**

15 — **Radio connector**
connects to radio connector on car

16 — **Radio connector**
connects to radio

17 — **Antenna diversity switch**
located behind center console, near radio

18 — **Single-point bullet connector**

19 — **Radio interface wiring harness**

20 — **Four-point connector, male**

21 — **Four-point connector, female**

cardiagn.com

CD changer components, removing/installing

CD changer unit, removing/installing

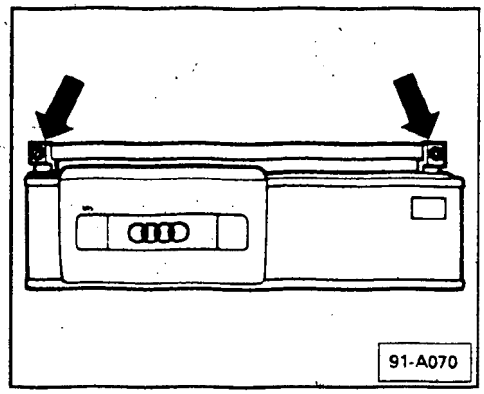

- disconnect eight-point DIN cable connection from rear of CD changer
- remove CD changer mounting screws (**arrows**)
- slide CD changer unit off trunk support bracket

- install in reverse order of removal
- ensure brackets on CD changer unit properly engage trunk support bracket

CD changer controller, removing/installing

- obtain radio security code
- disconnect battery ground strap
- disconnect airbag power supply connector
- remove left knee bar securing screws and carefully lower knee bar

Note

The frequency and loudness switches on the CD changer controller can be changed without completely removing the controller.

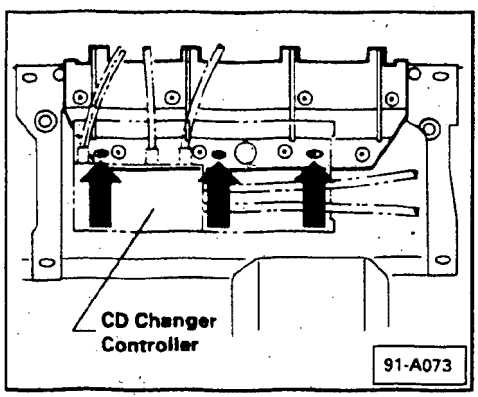

- remove all cable and wire connections from CD changer controller
- remove CD changer controller securing screws (**arrows**)
- remove CD changer controller

- install in reverse order of removal

cardiagn.com

CD changer electrical connectors, terminal identification

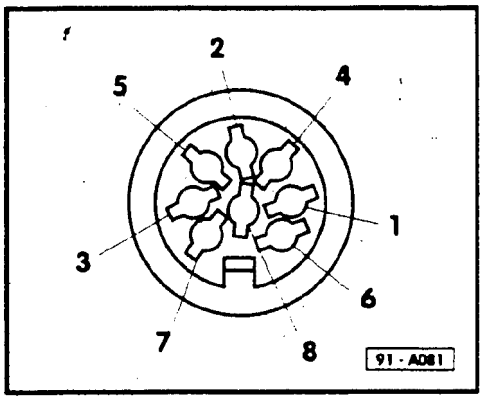

CD remote control cable (DIN, black), terminal identification

Note

Illustration at left shows connector end (female) that plugs into CD changer controller. Female connector on CD remote control is also the same.

1 – data bus
2 – not connected
3 – data bus ground
4 – control signal
5 – not connected
6 – plus (+), terminal **30**
7 – plus (+), terminal **15**
8 – ground (–), terminal **31**

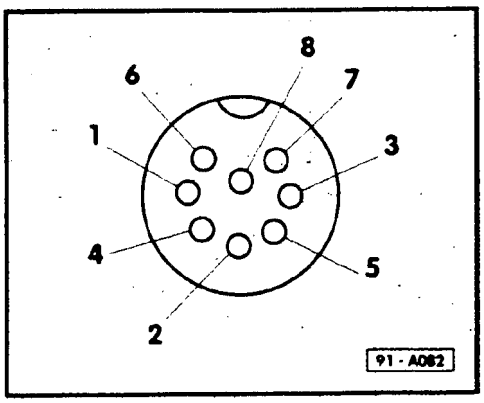

CD changer unit cable (DIN, blue), terminal identification

Note

Illustration at left shows connector end (male) that plugs into CD changer controller. Male connector on CD changer unit is also the same.

1 – data bus
2 – signal ground
3 – data bus ground
4 – right channel
5 – left channel
6 – plus (+), terminal **30**
7 – plus (+), terminal **15**
8 – ground (–), terminal **31**

cardiagn.com

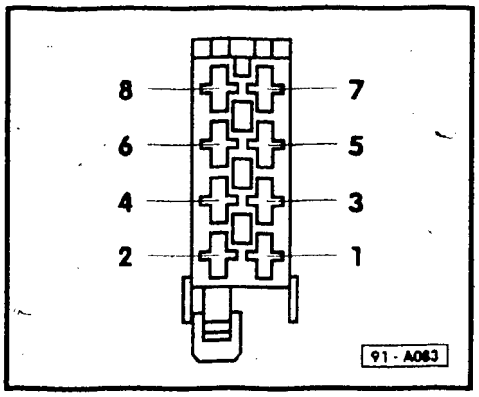

Eight-point radio connector (female, gray), terminal identification

1 – not connected
2 – ground
3 – plus (+), radio **ON**
4 – not connected
5 – plus (+), radio **ON**
6 – plus (+), terminal **58b**
7 – plus (+), terminal **30**
8 – ground (–), terminal **31**

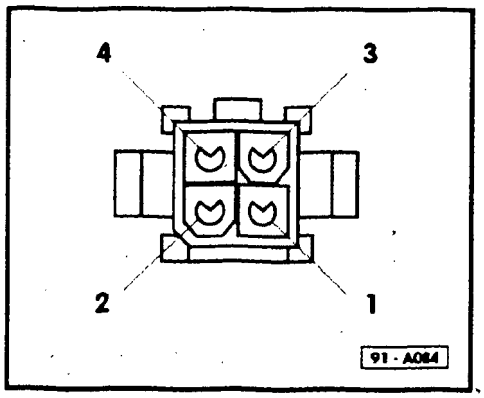

Four-point connector (male, on radio interface wiring harness), terminal identification

1 – plus (+), terminal **30**
2 – plus (+), terminal **15**
3 – ground (–), terminal **31**
4 – control signal

cardiagn.com

CONTINUED IN THE

BEGINNING OF NEXT ROW

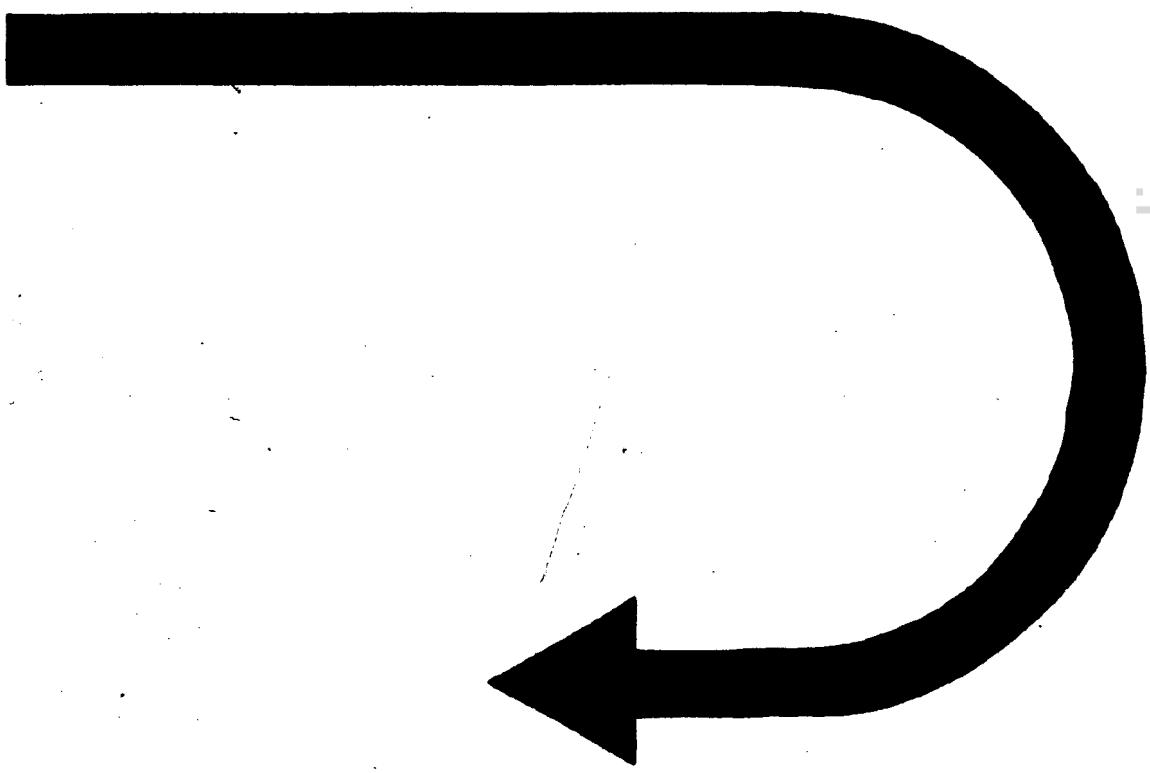

cardiagn.com

CD changer system, self-diagnosis

The CD changer is equipped with a self-diagnostic function. If the CD remote displays one of the following error codes, follow the service solution indicated.

Error code	Cause of problem	Service solution
E-01	Disc change malfunction	■ press magazine eject button on CD changer and remove magazine ■ reinsert magazine
E-02	Disc is in player mechanism	■ press magazine eject button on CD changer and remove magazine ■ remove any CD's from magazine ■ reinsert empty magazine
E-03 **E-04** **E-05**	Disc change malfunction	■ obtain radio security code ■ disconnect battery ground strap ■ reconnect battery and reactivate (code) radio ■ switch CD **ON** and recheck display If error code remains, ■ replace CD changer **Note** After switching CD changer **ON**, one of the above codes may be displayed for a few seconds and then disappear. This is normal and the CD changer unit is **OK**.
E-06	Disc change malfunction	■ press magazine eject button on CD changer and remove magazine ■ reinsert magazine ■ check display for error code If error code remains, ■ replace CD changer If magazine does not eject, ■ refer to CD magazine emergency eject procedure, see Index If magazine still does not eject, ■ replace CD changer and magazine

cardiagn.com

Error code	Cause of problem	Service solution
E-07	Magazine ejection impossible	■ press magazine eject button on CD changer If magazine does not eject, ■ refer to CD magazine emergency eject procedure, see Index If magazine still does not eject, ■ replace CD changer and magazine
E-30	High temperature	■ temperature of CD changer has exceeded 50°C (122°F), CD operation has stopped ■ CD operation will resume when temperature drops to normal range Once CD changer has cooled off, ■ check CD operation
E EE	No communication (data connection) between radio and CD changer	■ refer to troubleshooting section, see Index
— ——	No CD magazine in CD changer	■ insert CD magazine into CD changer
2 ——	No CD in second slot of CD magazine or CD installed upside down in second slot	■ insert CD into second slot of CD magazine or turn CD over
Note A similar display will appear if a CD disc is missing from, or is upside down in, another slot. The number displayed will correspond with the slot. If a slot is empty, or if a disc is upside down, the CD changer will automatically proceed to the next available disc.		
0 00	No CD is in magazine; CD magazine is empty	■ insert CD's into magazine
Note This display will also appear if all the discs in the CD magazine are installed upside down.		

cardiagn.com

CD changer system, troubleshooting

WARNING

Compact disc players contain an optical laser. Any internal adjustments or repairs by an unauthorized person may result in injury. Using optical instruments with the CD changer may cause eye injury.

CAUTION

Do **not** attempt to play cracked, warped or otherwise damaged discs. Playing a damaged disc could severely damage the changer.

Note

The CD changer may not operate properly because of condensation collected on the discs or optical parts (lens or prism). This may happen during cold winter weather when the inside of the car starts to warm up. Dry a misted disc with a clean, dry, lintfree cloth. Wait approximately one hour for optical parts to dry.

CD does not play

- switch radio and CD changer **ON**
- compare display on remote control with the following chart

Display on CD remote control	Troubleshooting reference
1 01	Go to Ⓐ, next page
E EE	Go to Ⓑ, two pages following
No display (blank)	Go to Ⓒ, two pages following
E-01 to E-07	See self diagnostic chart preceding this section
E-30	Go to Ⓓ, three pages following
0 00	Go to Ⓔ, three pages following
— ——	Go to Ⓕ, three pages following

cardiagn.com

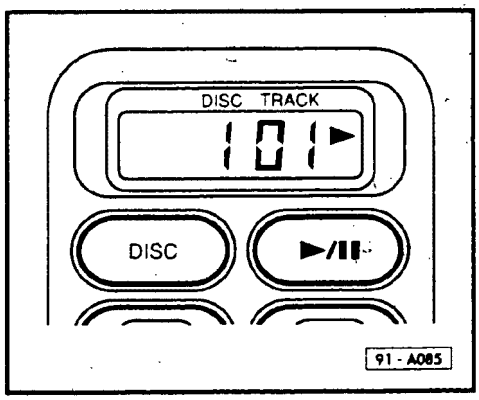

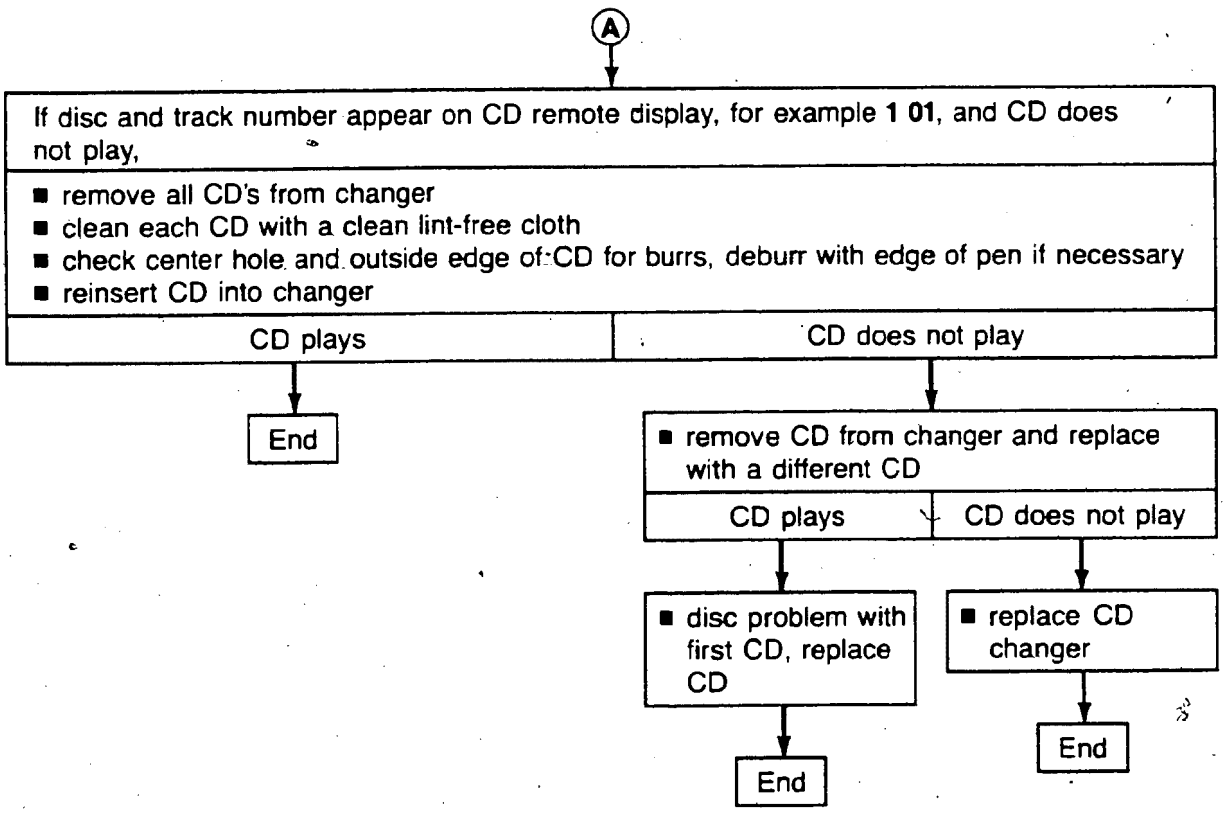

cardiagn.com

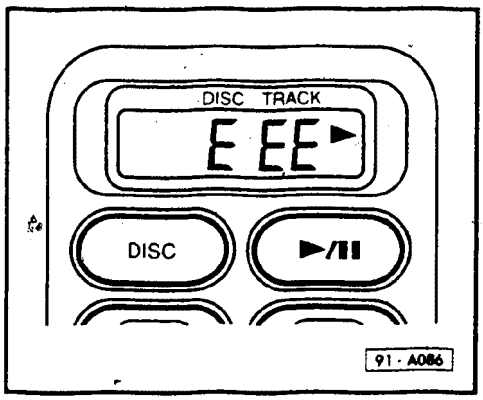

Ⓑ

If **E EE** appears on CD remote display, and CD does not play,

- check wiring (DIN cables) and connections between radio and CD changer for open circuits according to wiring diagram, repair as necessary

All wires and connections check **OK**, display does not change	Open in wire or connection found and repaired
■ replace CD changer → End	Go to Ⓖ, two pages following

Ⓒ

If CD remote display is blank and CD does not play,

- check fuses and power supply to CD changer

If **OK**

- check wiring (DIN cables) and connections between radio and CD changer for open circuits according to wiring diagram, repair as necessary

All wires and connections check **OK**, display does not change	Open in wire or connection found and repaired
■ replace CD remote control with a known good unit • CD remote must display disc and track number, for example **1 01**, and CD must play	Go to Ⓖ, two pages following
YES	**NO**
■ replace CD remote control → End	■ reinstall first CD remote control ■ replace CD changer → End

cardiagn.com

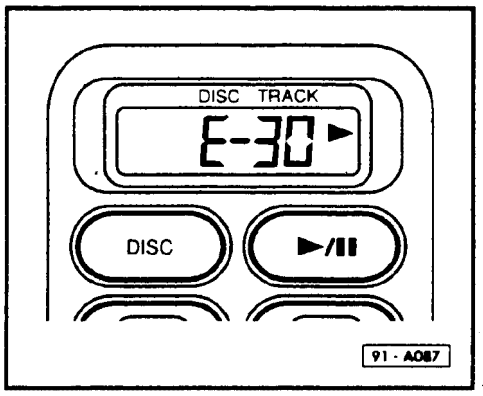

Ⓓ

If **E-30** appears on CD remote display and CD does not play,
- temperature of CD changer has exceeded 50°C (122°F), CD operation has stopped
- CD operation will resume when temperature drops to normal range

Once CD changer has cooled off,
- check CD operation

Go to Ⓖ, next page

Ⓔ

If **0 00** appears on CD remote display, and CD does not play,

CD magazine is empty or all discs in CD magazine are installed upside down
- insert discs into CD magazine or turn all CD's over
- insert CD magazine into CD changer

Go to Ⓖ, next page

Ⓕ

If — —— (dashes) appear on CD remote display and CD does not play,

CD magazine not installed in CD changer
- insert discs into CD magazine
- insert CD magazine into CD changer

Go to Ⓖ, next page

cardiagn.com

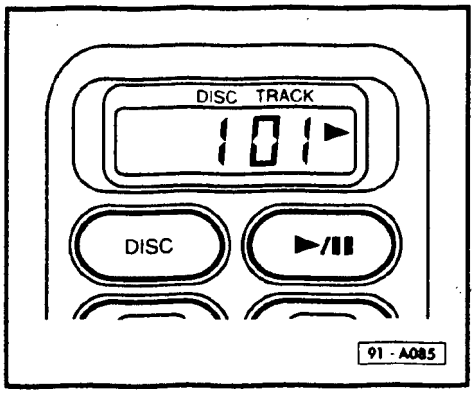

G

- switch radio and CD changer **ON**
  - disc and track number, for example **1 01**, must be displayed on CD remote

YES

- CD must play

YES

End

NO

- replace CD with a known good disc
  - CD must play

YES

End

NO

- replace CD changer

End

NO

If another error code is displayed on the CD remote (different from the original code),
- refer to beginning of this section and continue with troubleshooting

If original error code has not changed,
- replace CD changer

If CD remote display is blank,
- replace CD remote control with a known good unit
  - CD remote must display disc and track number, for example **1 01**, and CD must play

YES

- replace CD remote control

End

NO

- reinstall first CD remote control
- replace CD changer

End

Disc problem with first CD

- check CD for cleanliness, clean with lint free cloth if necessary
- check CD center hole and outside edge for burrs, deburr with edge of pen if necessary
- check CD for visible signs of damage, replace if necessary

End

cardiagn.com

Sound skips, vehicle stopped

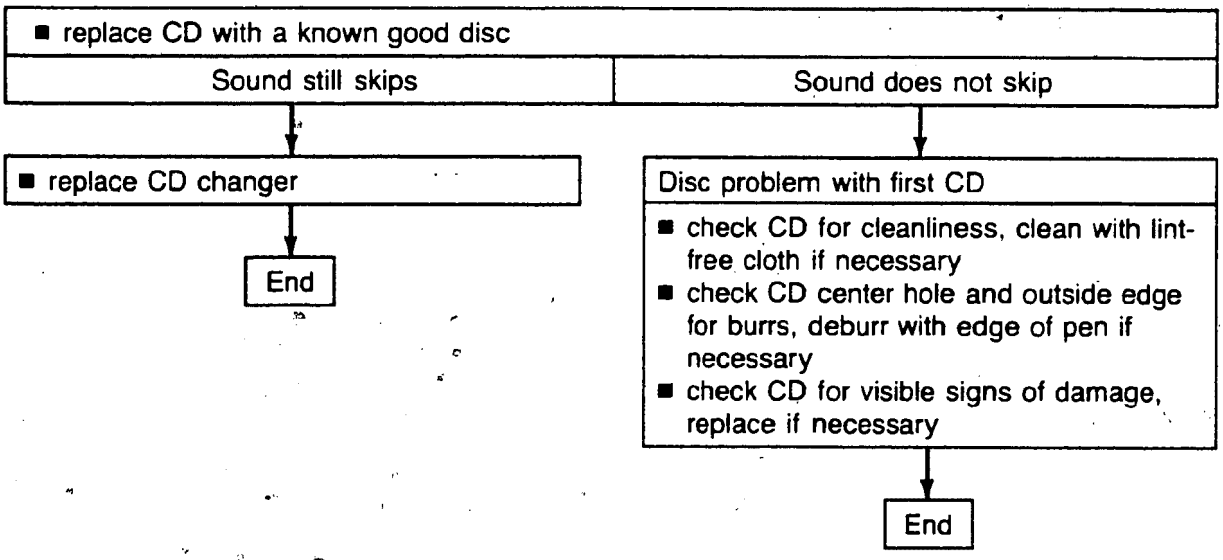

cardiagn.com

Sound skips, vehicle moving

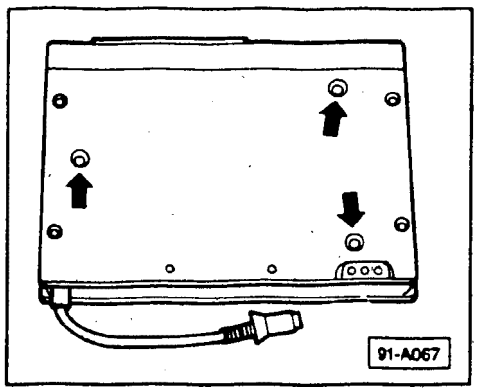

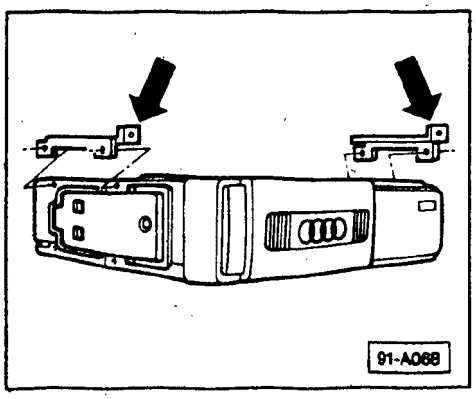

- ensure shipping screws (**arrows**) are removed from bottom of CD changer
- check CD changer mounting brackets (**arrows**) for looseness and tighten if necessary
- drive vehicle while playing CD

Sound skip varies with road conditions or driving mode	Sound skip remains constant regardless of road conditions or driving mode

- replace CD with a known good disc

Sound still skips	Sound does not skip

- replace CD with a known good disc

Sound still skips	Sound does not skip

Note

High frequency shock caused by rough roads or roads hazards can cause a normally operating CD changer to skip.

If excessive skipping persists,
- replace CD changer

End

- replace CD changer

End

Disc problem with first CD
- check CD for cleanliness, clean with lint-free cloth if necessary
- check CD center hole and outside edge for burrs, deburr with edge of pen if necessary
- check CD for visible signs of damage, replace if necessary

End

cardiagn.com

CD magazine will not eject

Use the following procedure if CD magazine will not eject.

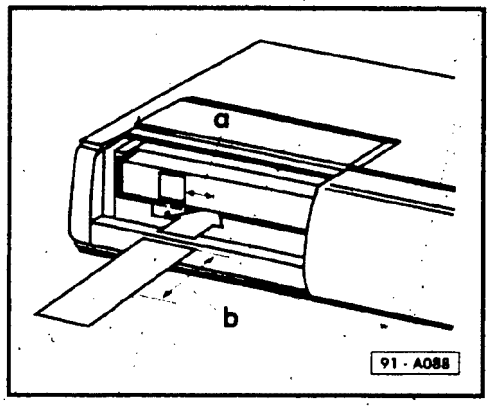

CD magazine, emergency ejecting

- slide open dust cover on CD changer
- fold a business card vertically in half
- insert business card between CD magazine and CD changer mechanism to release lock lever
  - **a** = approx. 20 mm (3/4 in.)
  - **b** = approx. 40 mm (1 1/2 in.)
  - CD magazine will eject when the folded business card is inserted approximately 40 mm (1 1/2 in.)
- remove CD magazine

CD sound level, too high or too low

If CD sound level is too high or low relative to radio/tape sound level, adjust CD output level (loudness) with loudness switch on the CD changer controller.

CD loudness switch, changing

- obtain radio security code
- disconnect battery ground strap
- disconnect airbag power supply connector
- remove left knee bar securing screws and carefully lower knee bar
  - CD changer controller mounted to knee bar

Note

The CD changer loudness switch is set to "M" (middle) at the factory.

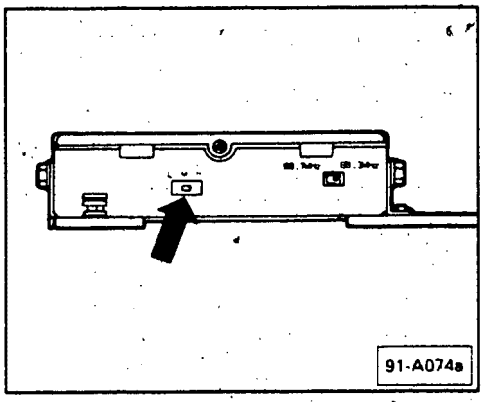

- adjust CD changer loudness switch (**arrow**) as follows:

If CD sound level is too high (loud) relative to radio/tape play or if CD sound level becomes distorted at high volume level,

- adjust switch to "L" (low) position

If CD sound level is too low (soft) relative to radio/tape play,

- adjust switch to "H" (high) position

cardiagn.com

- reinstall left knee bar
- reconnect airbag power supply connector
- reconnect battery ground strap
- reactivate (code) radio
- check CD changer operation

Static when listening to CD

A strong station broadcasting at 88.3MHz in the customer's area can cause static while listening to the CD. If static is heard, change the CD frequency switch on the CD changer controller to 88.7MHz.

CD frequency switch, changing

Note

The CD changer frequency switch is set to 88.3MHz at the factory.

- obtain radio security code
- disconnect battery ground strap
- disconnect airbag power supply connector
- remove left knee bar securing screws and carefully lower knee bar
  - CD changer controller mounted to knee bar

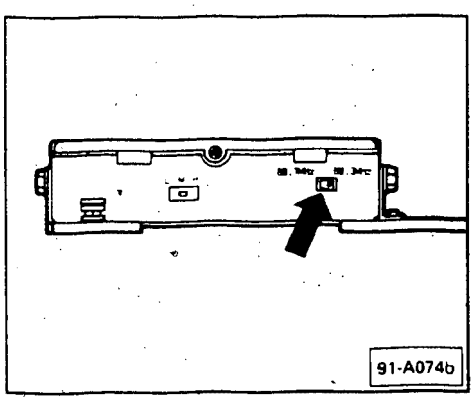

- adjust CD changer frequency switch (**arrow**) to 88.7MHz

- reinstall left knee bar
- reconnect airbag power supply connector
- reconnect battery ground strap
- reactivate (code) radio
- check CD changer operation

cardiagn.com

Index

Rear wiper/washer (Coupe Quattro)
- assembly **92.7**
- rear spray jet, adjusting/removing **92.9**
- rear wiper arm, adjusting **92.9**

Windshield washers
- assembly **92.5**
- spray jet, adjusting **92.6**
- spray jet, removing/installing **92.6**

Windshield wipers
- assembly **92.2**
- crank, installing **92.4**
- troubleshooting chart **92.11**
- wiper arm, adjusting (Coupe Quattro) **92.4**
- wiper arm, adjusting (80/90) **92.3**
- wiper arm angle, adjusting **92.10**
- wiper shaft, removing **92.4**

cardiagn.com

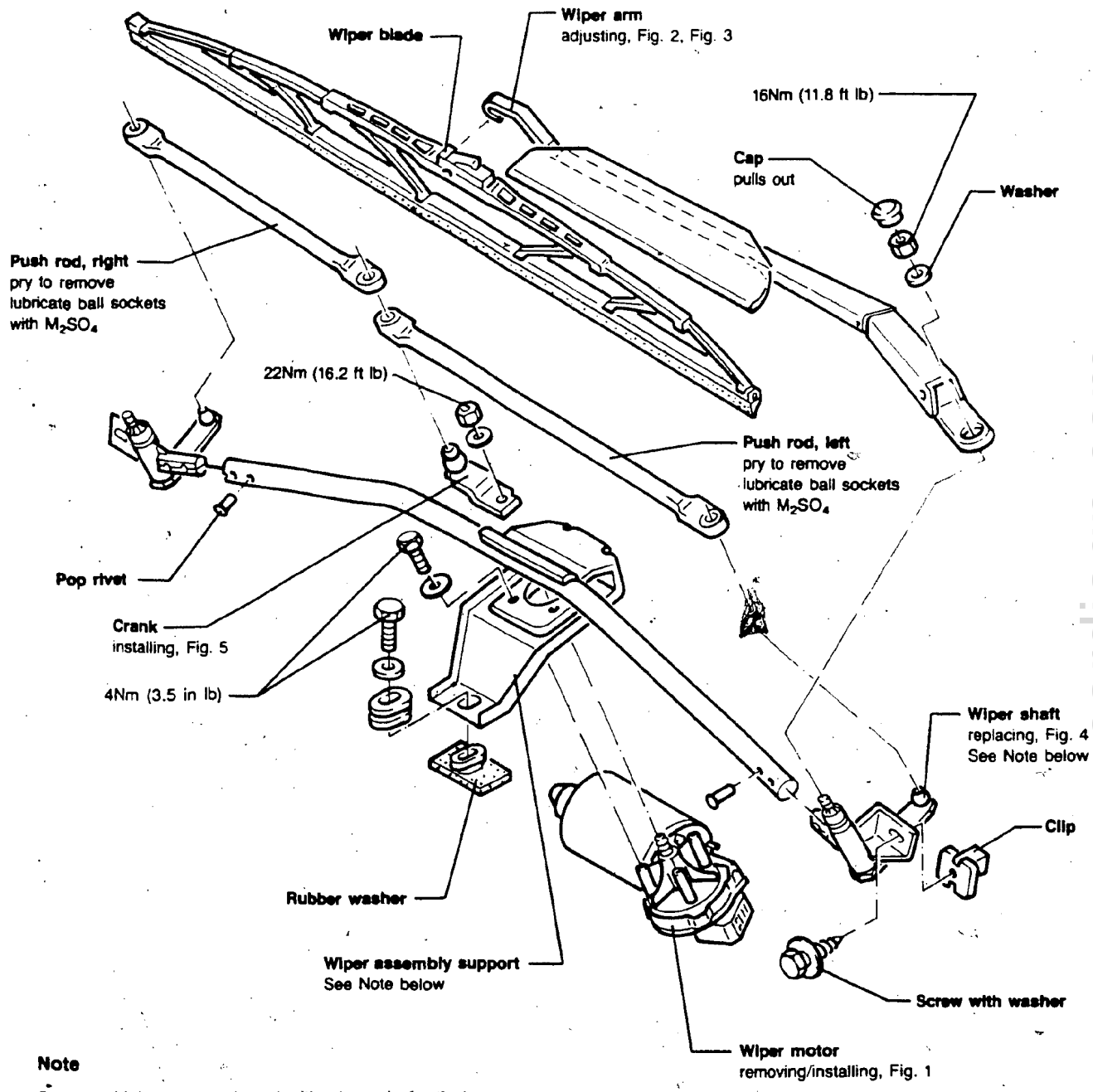

Note

Some vehicles are equipped with wiper shafts that are pressed into the wiper assembly support. On these vehicles, the wiper shafts cannot be replaced individually, but must be replaced with the wiper support as a complete assembly.

92-226

cardiagn.com

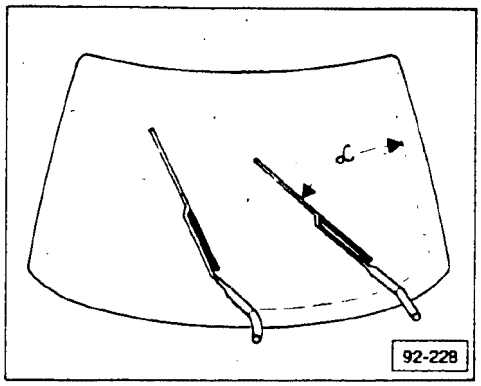

▶ **Fig. 1 Adjusting wiper arms for installation/ removal of wiper motor**

Removing

- switch ignition **ON**
- run windshield wipers until left wiper arm is in position shown
  - α = 45°

> **CAUTION**
>
> Windshield wipers must be in that position before motor and push rods can be removed.

- switch ignition **OFF**
- remove wiper arms
- remove wiper motor with push rods

Installing

- install motor with push rods
- switch ignition **ON**
- run windshield wiper motor until motor is in park position
- switch ignition **OFF**
- install wiper arms

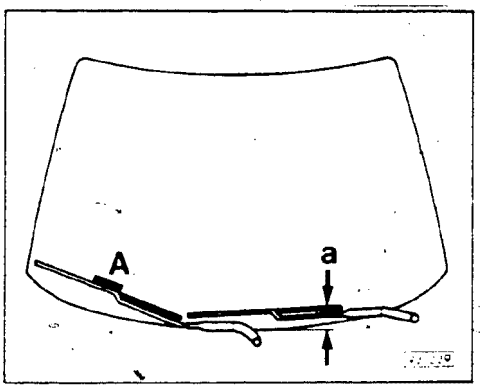

▶ **Fig. 2 Wiper arm, adjusting (Audi 80/90)**

Note

Windshield wiper motor must be in the park position before adjusting the wiper arms.

- install right wiper arm and adjust to position **A**
  - 16 Nm (11.8 ft lb)
- install left wiper arm and adjust to position **a**
  - **a** = 60mm (2.4 in)
  - 16 Nm (11.8 ft lb)

cardiagn.com

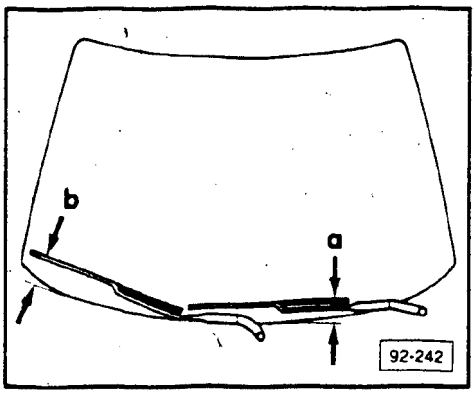

▶ **Fig. 3 Wiper arm, adjusting (Audi Coupe Quattro)**

Note

Windshield wiper motor must be in the park position before adjusting the wiper arms

- install right wiper arm and adjust to position **b**
  - **b** = 90mm (3.5 in)
  - 16 Nm (11.8 ft lb)
- install left wiper arm and adjust to position **a**
  - **a** = 65mm (2.6 in)
  - 16 Nm (11.8 ft lb)

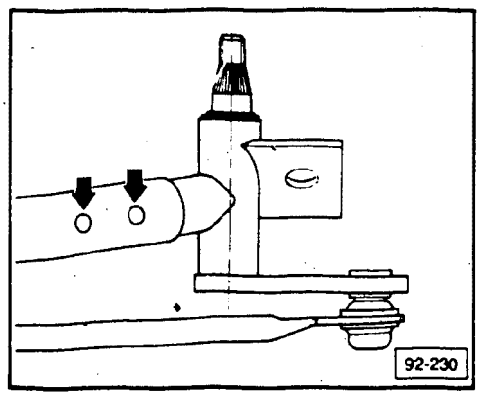

▶ **Fig. 4 Wiper shaft, removing**

Note

Wiper shaft cannot be repaired. Replace if defective. If wiper shaft is pressed into wiper assembly support, replace complete assembly.

- saw rivets off (**arrows**)
- remove wiper shaft
- install new wiper shaft
- pop rivet into place

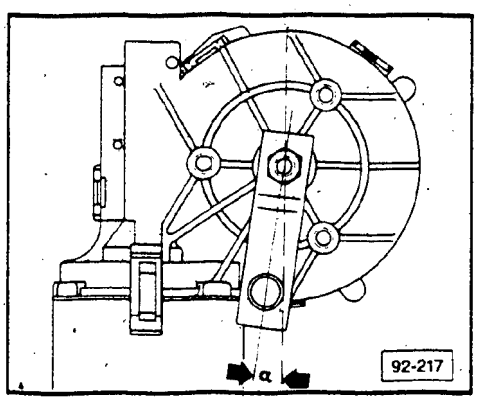

▶ **Fig. 5 Crank, installing**

Note

Windshield wiper motor must be in the park position before installing the crank.

a = approximately 6°

cardiagn.com

THIS FRAME INTENTIONALLY LEFT

BLANK

cardiagn.com

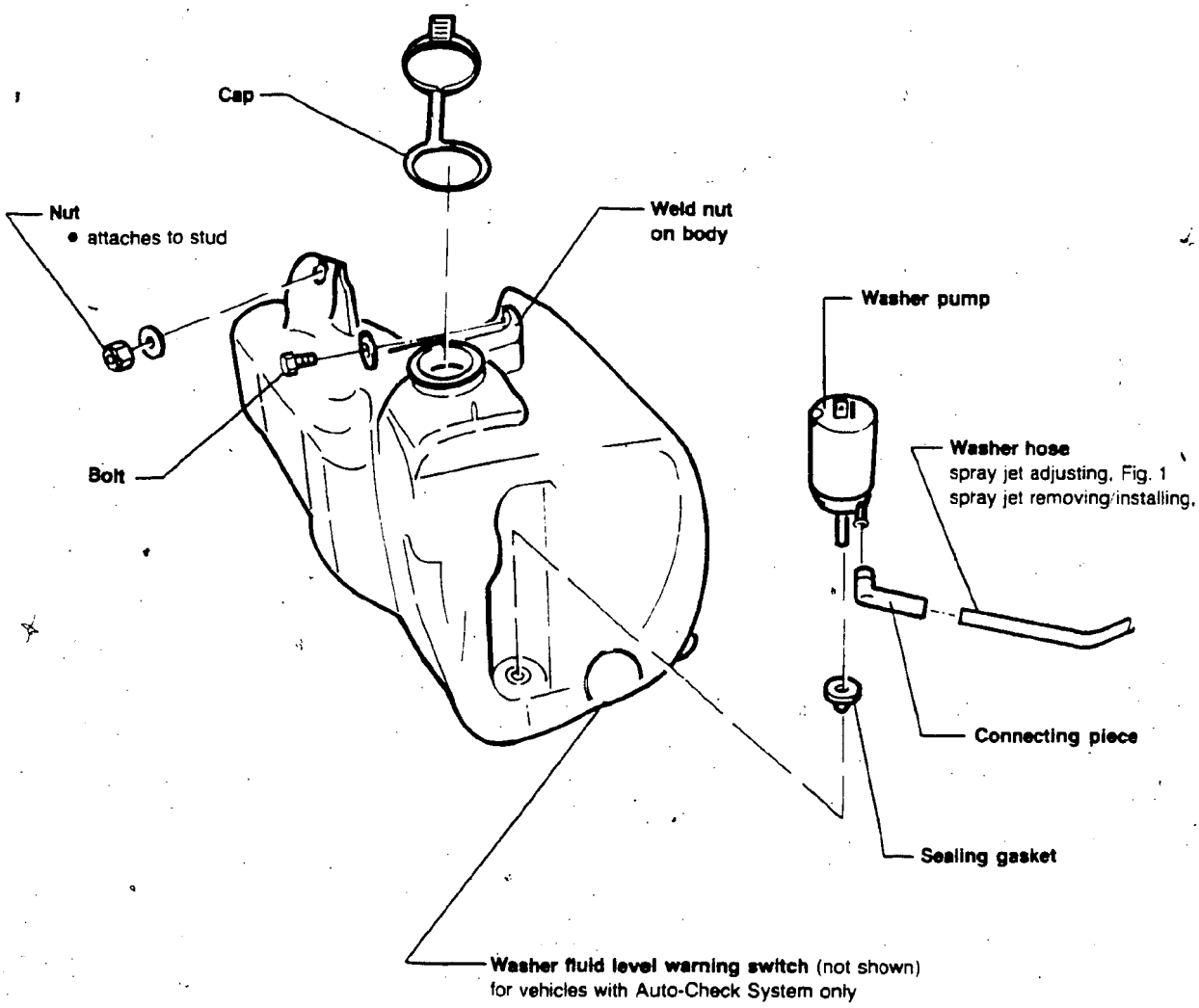

cardiagn.com

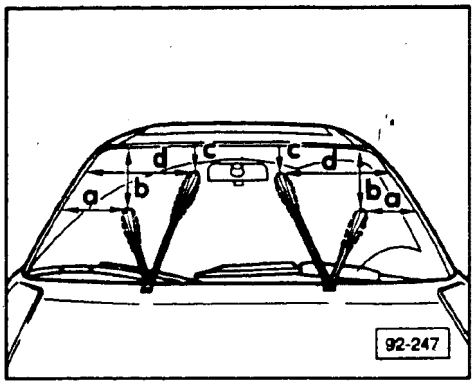

▶ **Fig. 1 Spray jets, adjusting**

- adjust spray jets using tool **3125**

> **CAUTION**
>
> **DO NOT** adjust spray jets using a needle, pin or similar object or damage to the spray jets will result.

a = 200 mm (7.9 in.)
b = 450 mm (17.7 in.)
c = 220 mm (8.7 in.)
d = 480 mm (18.9 in.)

adjusting tolerance ± 20 mm (0.8 in.)

Note

Adjust heated spray jets the same way and to the same specifications.

If water spray is uneven or cannot be adjusted to specifications,
- replace spray jet

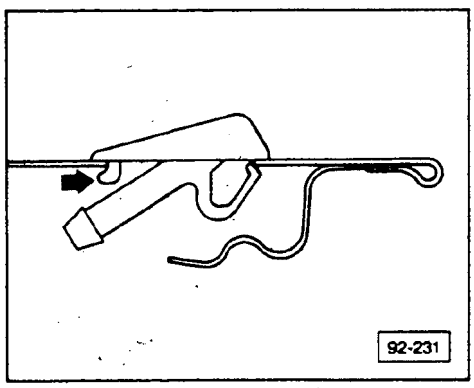

▶ **Fig. 2 Spray jet, removing/installing**

Removing

- press spray jet at arrow in direction indicated
- lift jet up and out through top

Installing

- install spray jet from top
- slide nose (**arrow**) in first and push down firmly until clip engages

cardiagn.com

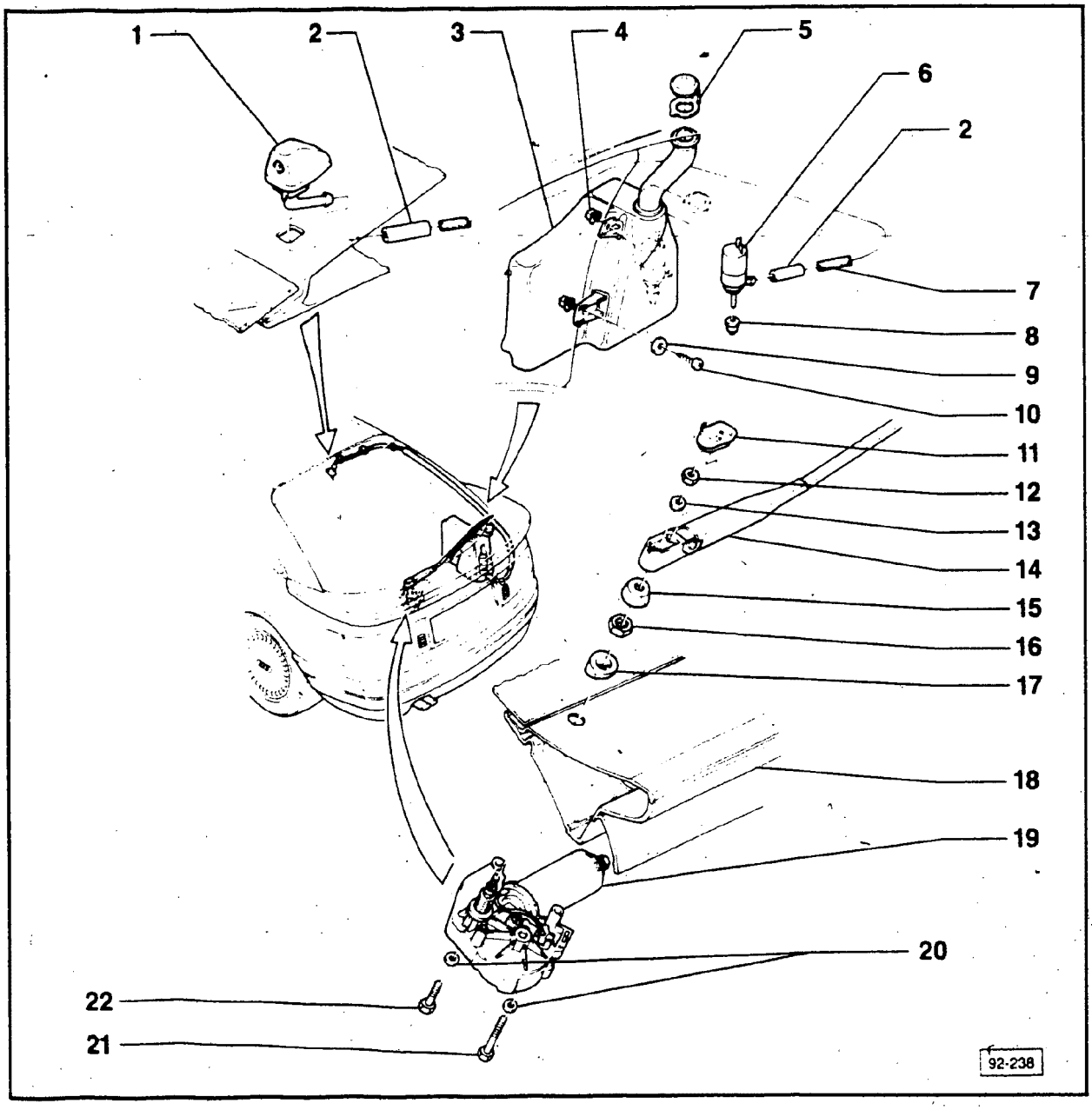

1 — **Spray jet**
adjusting, Fig. 1
removing, Fig. 2

2 — **Connecting hose**

3 — **Washer bottle**
twist filler neck inward to fill.

4 — **Nut**

5 — **Washer bottle cap**

6 — **Washer pump**
remove by carefully pulling upwards

install by guiding washer pump intake tube into washer bottle grommet, push down pump until fully seated

7 — **Washer hose**

8 — **Sealing grommet**
always replace

9 — **Washer**

10 — **Screw**

11 — **Cap**
pry off with small screwdriver

12 — **Nut**
16 Nm (11.8 ft lb)

13 — **Spring washer**

14 — **Wiper arm**
adjusting, Fig. 3

15 — **Cap**

16 — **Nut**
8 Nm (5.9 ft lb)

cardiagn.com

17 — **Spacer ring**
position tab to match notch on wiper motor shaft

18 — **Rear hatch**

19 — **Wiper motor**
run motor to park position before installing

20 — **Spring washer**

21 — **Bolt M6 x 52 mm**
8 Nm (5.9 ft lb)

22 — **Bolt M6 x 32 mm**
8 Nm (5.9 ft lb)

cardiagn.com

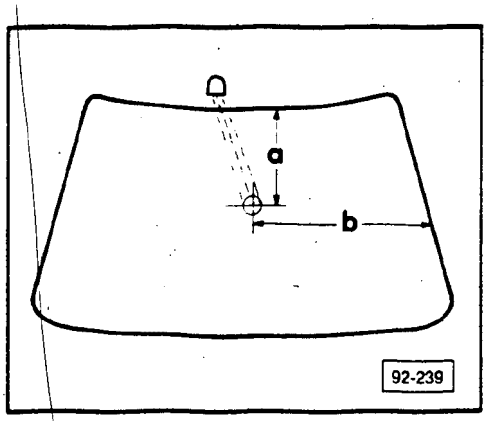

▶ **Fig. 1 Rear spray jet, adjusting**

CAUTION

Do not use a needle to adjust spray jet.

Use 0.8 mm mandrel for adjustments
a = 300 mm (11.8 in)
b = 550 mm (21.6 in)

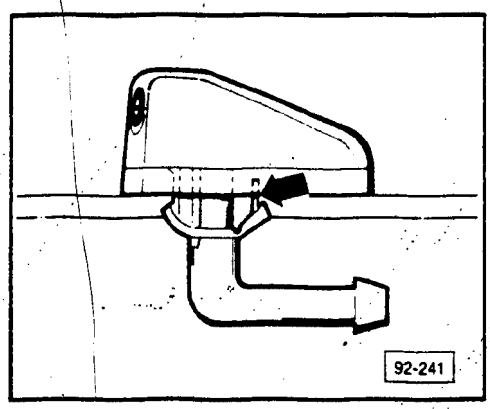

▶ **Fig. 2 Rear spray jet, removing**

- push retaining clip (**arrow**) in direction indicated
- pull jet up and out through top

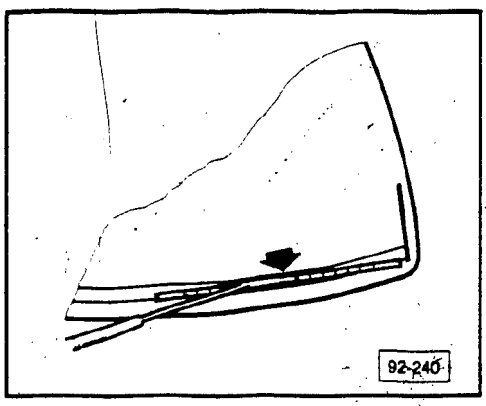

▶ **Fig. 3 Rear wiper arm, adjusting**

- adjust wiper arm so that center of wiper blade (**arrow**) lies at bottom of second defroster filament

cardiagn.com

Wiper arm angle, adjusting

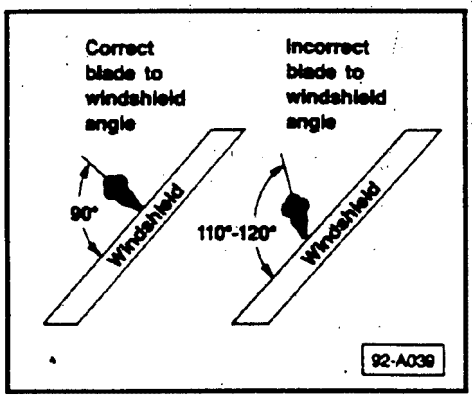

Windshield wiper blade chatter and skipping of blade across windshield can be caused by incorrect wiper arm angle.

The incorrect wiper arm angle will not allow the wiper blade to flip and follow the wiper arm.

It is most noticeable on the downward stroke of the wiper.

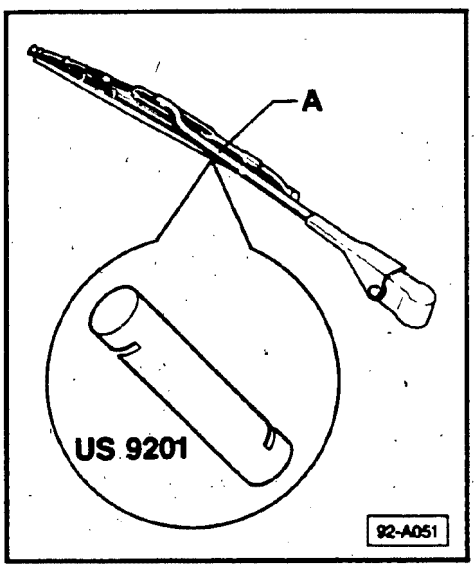

To adjust wiper arm angle,

- insert slot of wiper arm adjusting tool **US 9201** over wiper arm
- bend wiper arm at **A** to obtain correct wiper arm angle

Note

Wiper arm must be bent at location **A**. Bending the wiper arm in the wrong location will not provide a lasting repair.

Wax and dirt build-up on windshield wiper blades can cause streaking and smearing on windshield when using wipers.

- **do not replace** windshield wiper blades that may only need to be cleaned
- clean wax and dirt build-up from wiper blades and entire windshield with alcohol based cleaning solution or rubbing alcohol and water
- see troubleshooting chart on next page
- refer customer to instructions in Owner's Manual

cardiagn.com

Windshield wiper troubleshooting

Symptoms	Possible causes	Solutions
Bad wiping (sheeting) 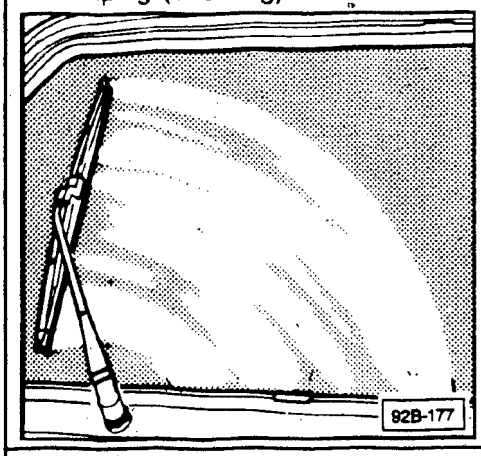	• dirty blade lip	— clean blade lip with wet cloth and soap, alcohol based cleaning solution, or rubbing alcohol and water — rinse with water
	• blade lip worn, torn or broken	— replace blades
	• old blade lip	— replace blades
Some water remains in the wiping area, forming droplets 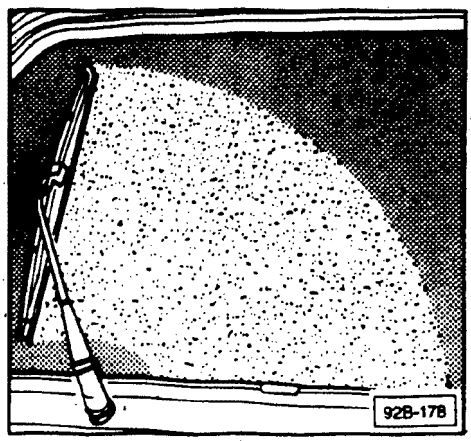	• windshield glass contaminated by pollutants, oil or film from diesel engine exhaust	— clean windshield glass with clean cloth soaked in solution of alcohol (or ammonia) and warm water
Windshield wiper blades clean to one side and are deficient to the other (chatter) 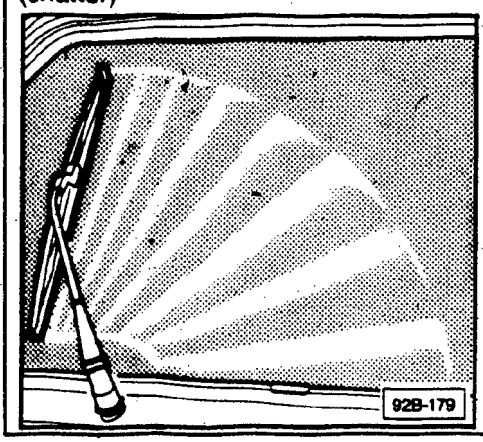	• blade lips are deformed or filled with dirt or foreign matter on one side	— replace blades
	• windshield wiper arms are twisted. Rubber lips do not touch glass properly	— bend wiper arm to obtain proper blade contact
	• glass is dirty or not wet enough, resulting in varying friction between blade and glass	— clean the glass with clean cloth soaked in solution of alcohol (or ammonia) and warm water

cardiagn.com

Index

Fog lights
- adjusting **94.4**
- removing/installing **94.4**

Headlights
- adjusting **94.3**
- assembly **94.2**
- removing/installing **94.3**

High mount brake light (Coupe Quattro)
- assembly **94.9**
- bulb holder, removing/installing **94.10**
- lens, removing/installing **94.10**

Ignition switch
- connections **94.20**
- removing/installing **94.19**

Lock cylinder
- removing/installing **94.21**

Rear lights
- assembly (80/90, 80/90 Quattro) **94.5**
- assembly (Coupe Quattro) **94.7**
- bulb holders **94.6**
- identification (Coupe Quattro) **94.8**

Steering column switches
- assembly (1990) **94.11**
- connector terminals, removing/installing (1990) **94.18**
- removing/installing (vehicles with Airbag) **94.16**
- removing/installing (vehicles without Airbag) **94.19**
- terminal identification (1990) **94.12**

Steering lock housing
- removing/installing **94.20**

cardiagn.com

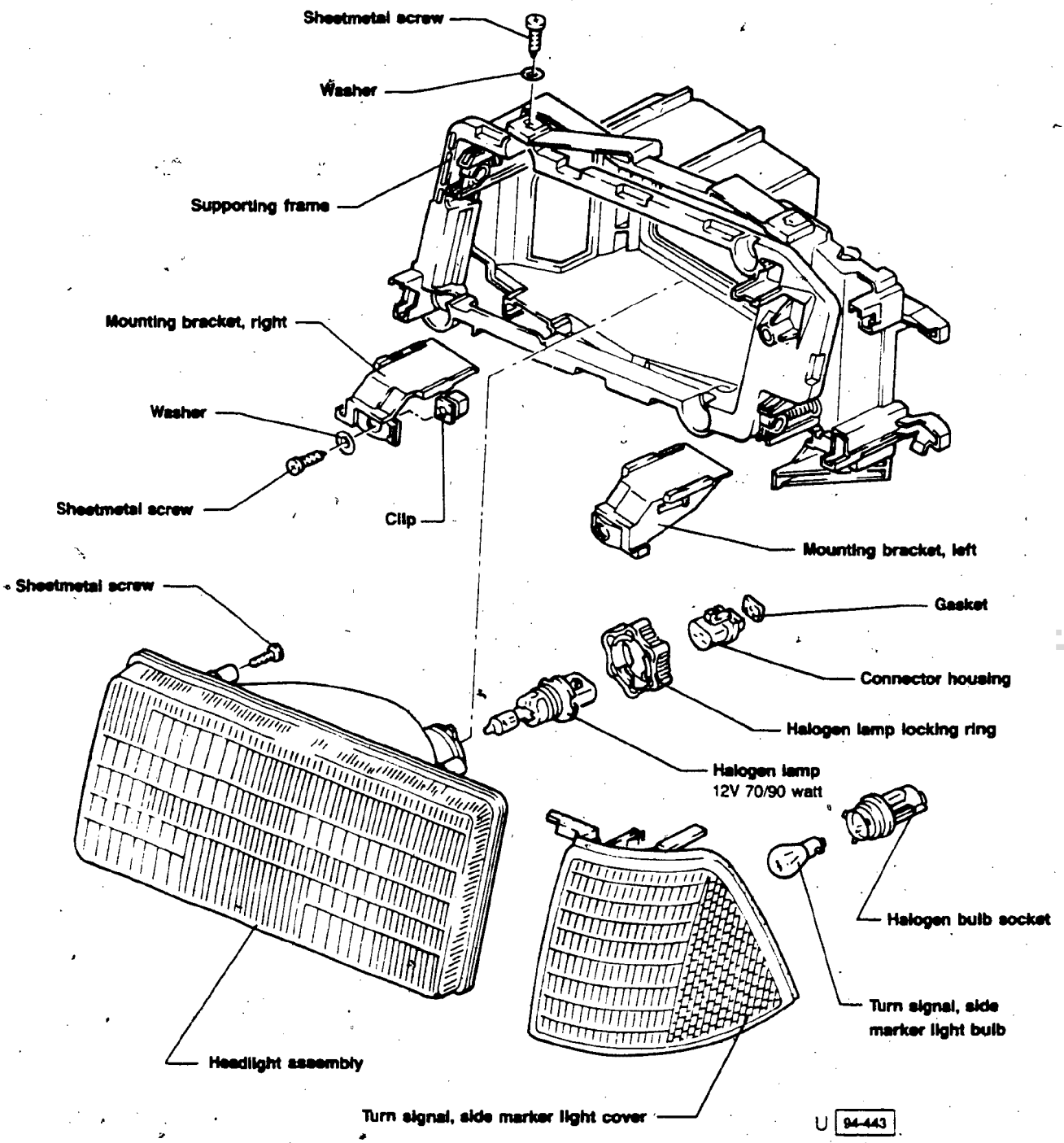

cardiagn.com

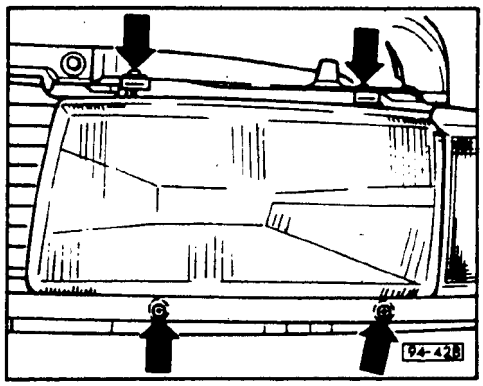

▶ **Fig. 1 Headlight, removing/installing**

- remove back covering
- disconnect wiring connectors
- remove screws (**arrows**)
- remove headlight with turn signal indicator

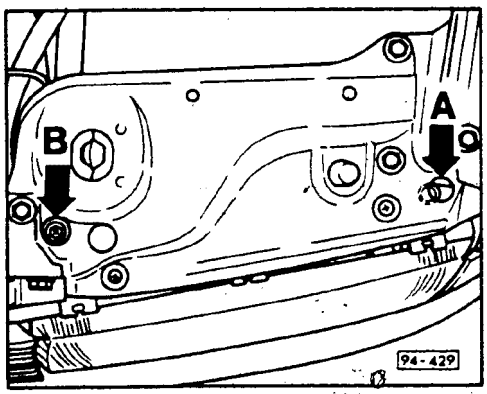

▶ **Fig. 2 Headlight, adjusting**

Headlight is adjusted by turning adjusting screws **A** and **B** with Phillips head screwdriver or inside hex wrench.

Note

Headlights must be aimed using optical headlight aiming equipment.

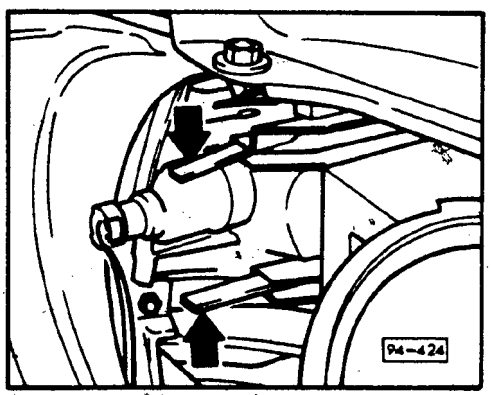

▶ **Fig. 3 Front turn signal and side marker light, removing/installing**

Note

The front turn signal, and side marker light can be removed only after removing the headlight.

- squeeze both retaining tabs (**arrows**)
- disconnect electrical connector
- remove light

cardiagn.com

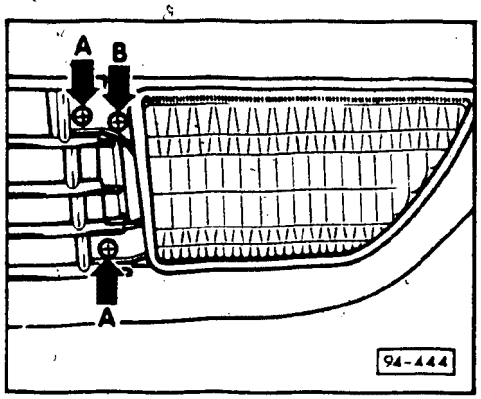

▶ **Fig. 4 Fog lights, removing/installing**

- pull back trim around grill
- remove screws **A**
- push fog light in toward middle of vehicle and remove from front

Note

To replace the fog light bulb, the rear housing half of the fog light must be unscrewed.

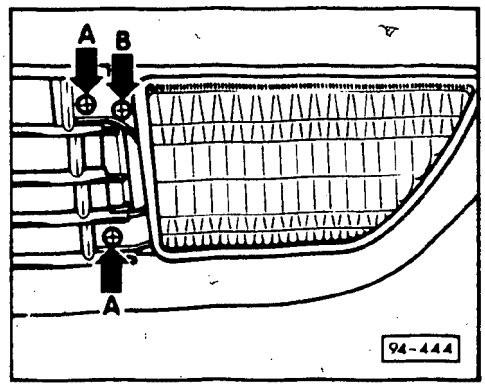

▶ **Fig. 5 Fog light, adjusting**

Note

It is not possible to make a lateral adjustment of the fog light. The fog light beam can only be adjusted horizontally.

Adjusting

- adjust fog light beam horizontally by turning screw **B**

cardiagn.com

THIS FRAME INTENTIONALLY LEFT

BLANK

cardiagn.com

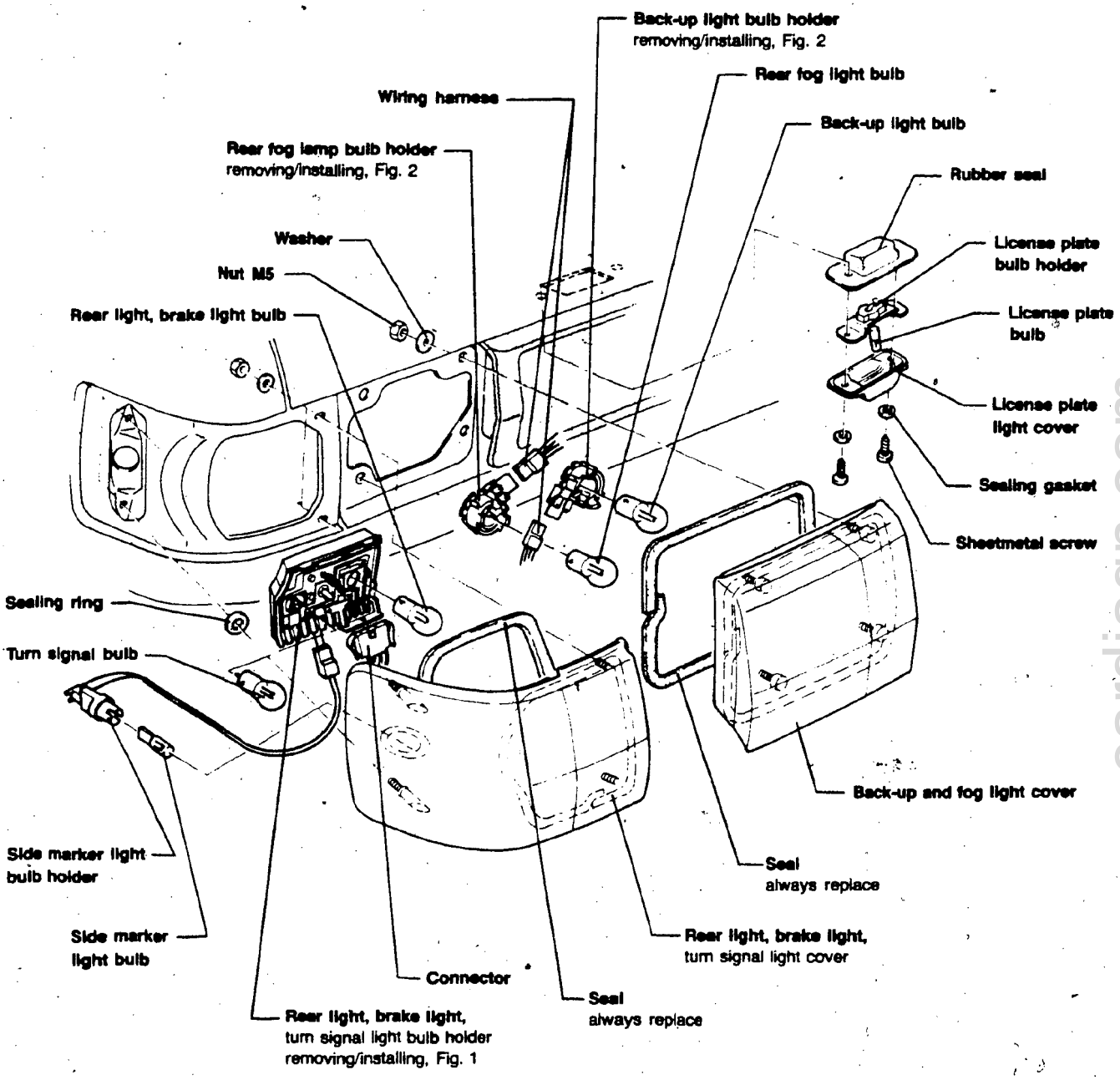

WARNING

If a rear fog light is installed at a later date,

— you **MUST** install a new bulb holder and cover

cardiagn.com

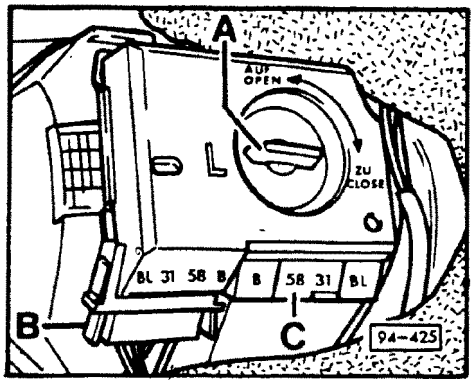

▶ **Fig. 1 Rear light, brake light, turn signal light bulb holder removing/installing**

- turn locking bolt **A** in direction of arrow
- remove connector **B**
- remove bulb holder

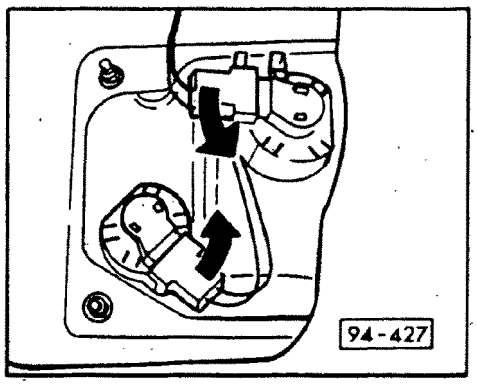

▶ **Fig. 2 Back-up light, rear fog light bulb holder removing/installing**

- turn bulb holder in direction of arrow
- remove bulb holder

cardiagn.com

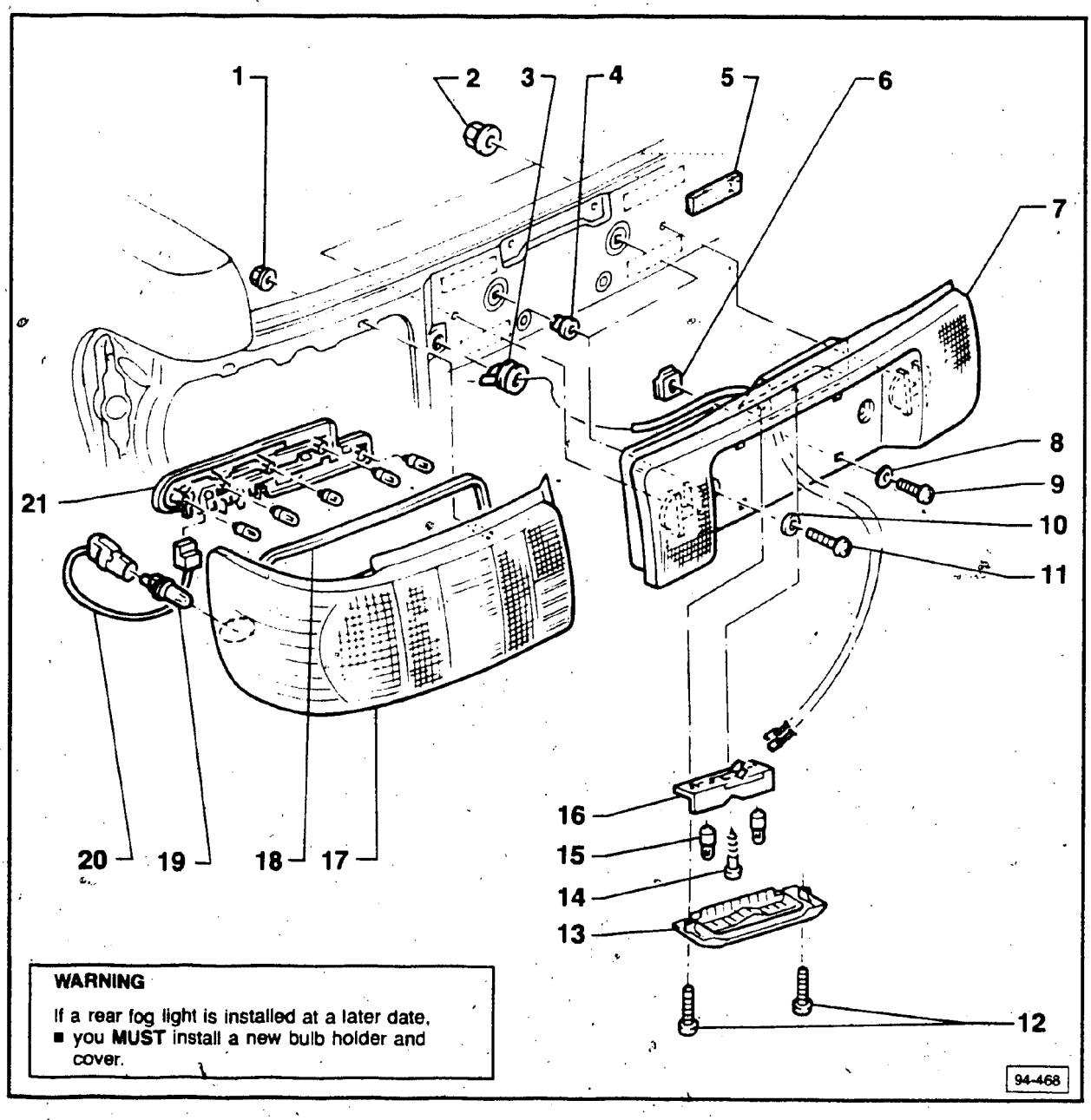

WARNING

If a rear fog light is installed at a later date,
- you **MUST** install a new bulb holder and cover.

1 — **Nut M5**
4 Nm (3 ft lb)

2 — **Nut M5**
4 Nm (3 ft lb)

3 — **Grommet**

4 — **Expanding nut**

5 — **Seal**
always replace

6 — **Nut**

7 — **License plate trim**

8 — **Washer**

9 — **Screw**
M5 x 15 mm

10 — **Spring washer**

11 — **Screw**
M6 x 10 mm

12 — **Screw**
M4 x 15 mm

13 — **License plate light lens**

14 — **Screw**

15 — **License plate bulb (2)**
12V/4W

16 — **License plate bulb holder**

17 — **Light cover**

18 — **Seal**

19 — **Side marker light bulb**
12V/3W

20 — **Side marker light bulb holder**
pull socket forward from lens to remove

21 — **Rear light bulb holder**
bulb identification, Fig. 1

cardiagn.com

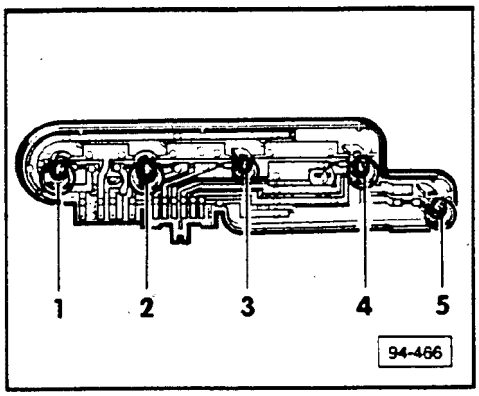

▶ **Fig. 1 Rear light, identification**

1 — turn signal bulb, 12V/21W
2 — brake/taillight bulb, 12V, 21/5W
3 — taillight bulb, 12V/5W
4 — fog light bulb (driver side only), 12V/12W
5 — back-up light bulb, 12V/21W

cardiagn.com

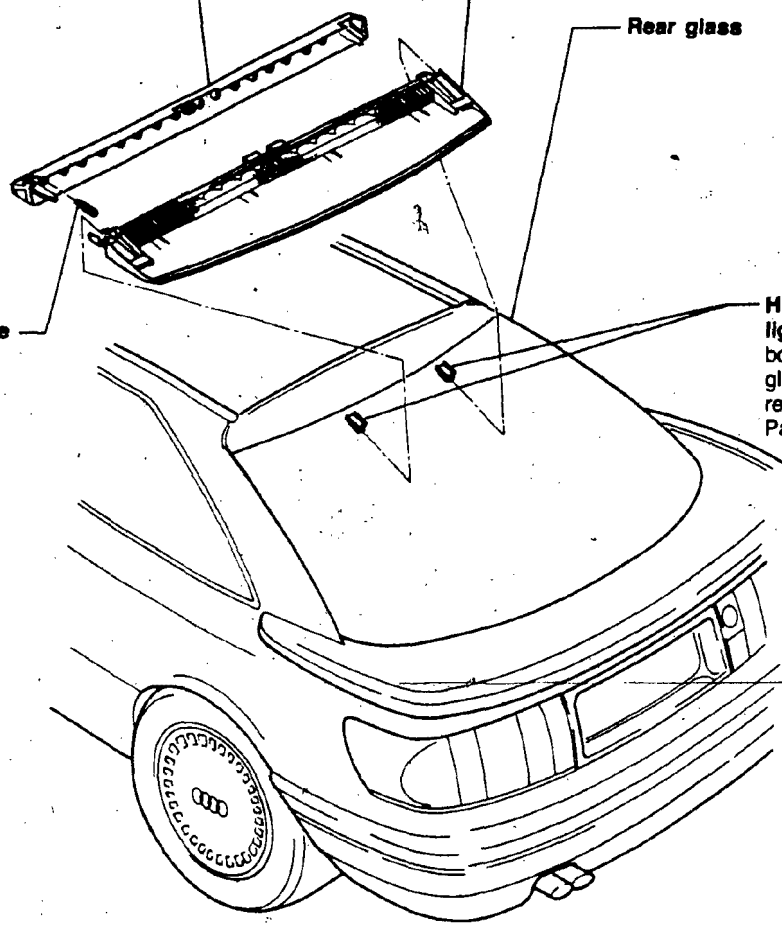

Note

The bulbs for the high mounted brake light are separate and can be replaced individually.

CAUTION

Part numbers are for reference only. Always consult your Parts Department for latest parts information.

94-469

cardiagn.com

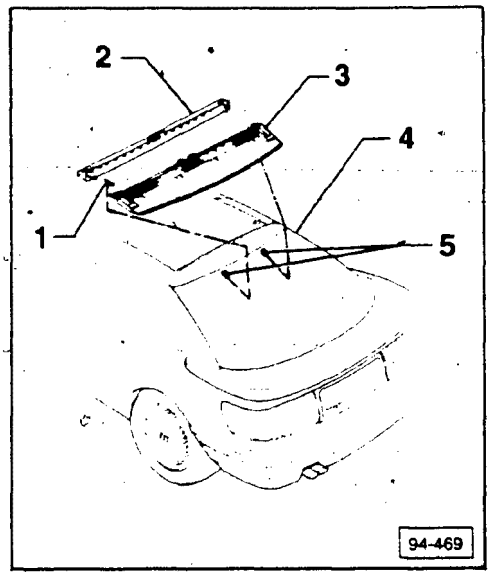

High mount brake light bulb holder, removing/installing

- squeeze retaining tabs on each side of bulb holder **2**
- pull bulb holder forward to remove
- to install, push bulb holder **2** rearward onto lens until retaining tabs engage

High mount brake light lens, removing/installing

- remove high mount brake light bulb holder **2**
- release both lens retainers and remove lens **3** by sliding rearward
- install lens by sliding forward onto retainers **5** until engaged
- re-install bulb holder **2**

cardiagn.com

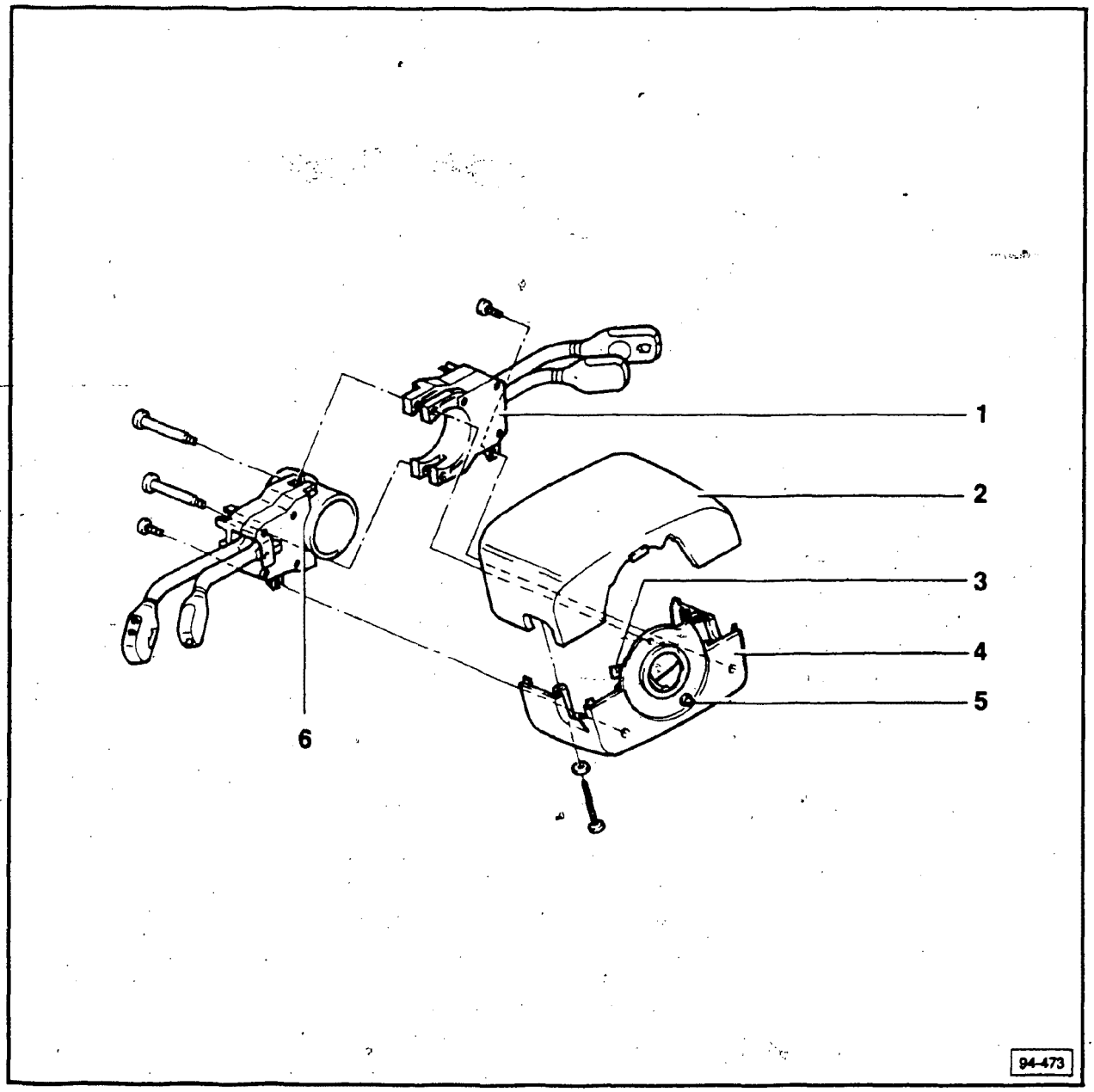

1 — **Windshield wiper/washer switch, hazard flasher switch, headlight wiper/washer switch, board computer function selector switch and rear window wiper/washer switch (Coupe)**
- terminal identification, see Index
- removing/installing, see Index

2 — **Upper trim cover**
- vehicles with airbag
- removing/installing, see Index

3 — **Slip ring connector**

4 — **Lower trim cover**

5 — **Carbon brush**

6 — **Headlight switch, parking light switch, turn signal switch, low/high beam switch, headlight flasher switch and cruise control switch**
- terminal identification, see Index
- removing/installing, see Index

cardiagn.com

Steering column switches, terminal identification

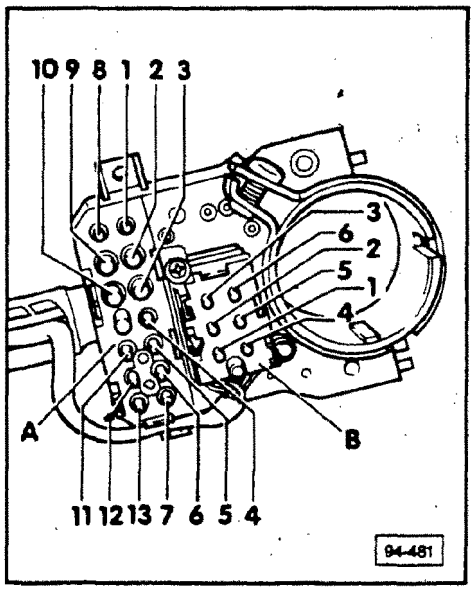

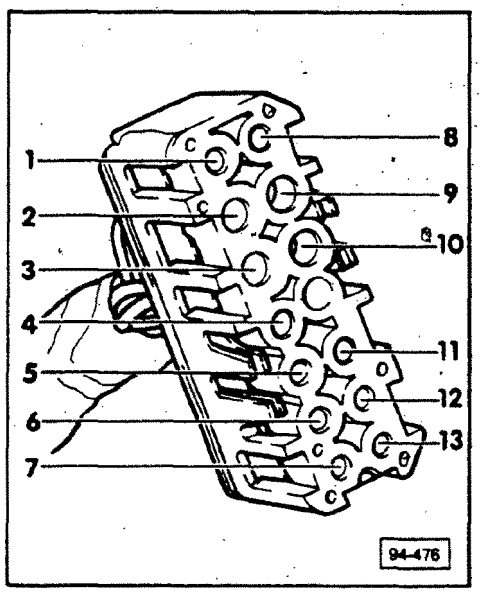

Terminal identification for headlight, turn signal, low/high beam, headlight flasher, parking light and cruise control system switches.
A — 13-point connector

1 — Light switch, terminal 1 (daytime driving lights — Canada)
2 — Headlight dimmer/flasher switch, terminal **56a**
3 — Light switch, terminal **X**
4 — Parking light switch, terminal **PR**
5 — Parking light switch, terminal **PL**
6 — Light switch and headlight dimmer flasher switch, terminal **30**
7 — Headlight dimmer/flasher switch, terminal **56b**
8 — Headlight dimmer/flasher switch, terminal **56**
9 — Light switch, terminal **9** (daytime driving lights — Canada)
10 — Light switch, terminal **10** (daytime driving lights — Canada)
11 — Parking light switch, terminal **P**
12 — Light switch and headlight dimmer flasher switch, terminal **30**
13 — Light switch, terminal **58**

cardiagn.com

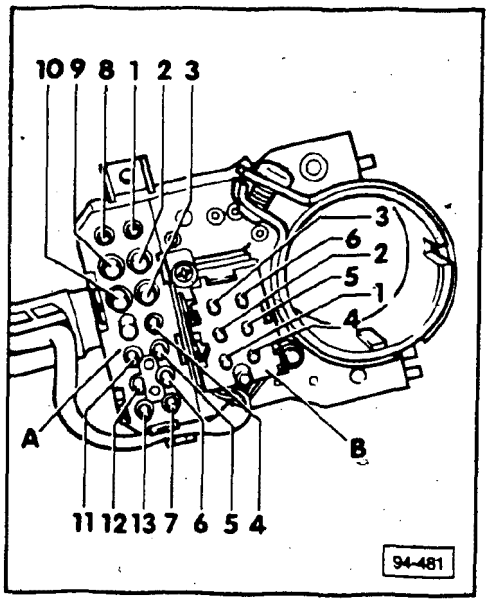

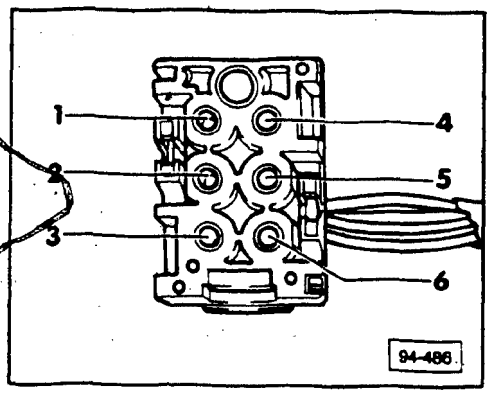

B — 6-point connector, cruise control system

1 — Terminal **15**
2 — ON, RESUME and OFF (with buttons)
3 — Input from control unit, terminal **3**
4 — ON and RESUME
5 — RESUME
6 — Set (storing)

cardiagn.com

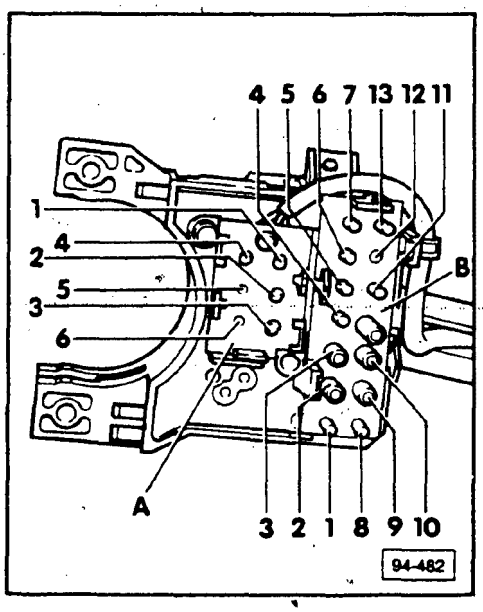

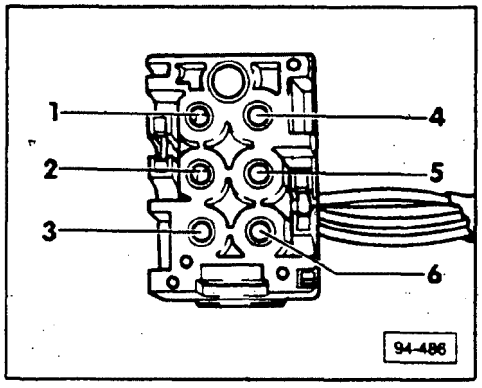

Terminal identification for hazard flashers, windshield washer/wiper, headlight washer system, board computer and rear window washer/wiper (Coupe)

A — 6-point connector

1 — Board computer, RESET
2 — Board computer, terminal 31
3 — Board computer, rocker switch down
4 — Board computer, rocker switch up
5 — Not connected
6 — Not connected

cardiagn.com

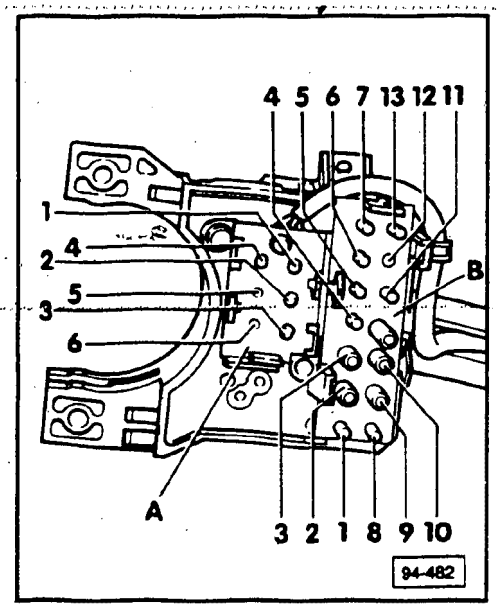

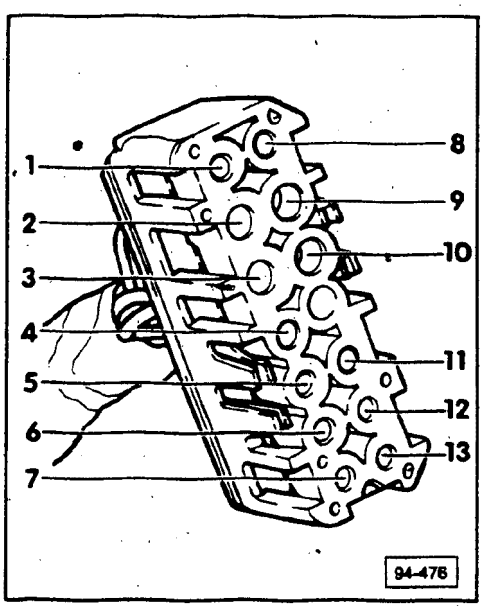

B — 13-point connector

1 — Hazard flasher switch, terminal **L**
2 — Windshield wiper switch, terminal **53a**
3 — Windshield wiper switch, terminal **53**
4 — Windshield wiper switch, terminal **J**
5 — Hazard flasher switch, terminal **49**
6 — Windshield wiper switch, terminal **53c**
7 — Hazard flasher switch, terminal **R**
8 — Hazard flasher switch, terminal **49a**
9 — Windshield wiper switch, terminal **53e**
10 — Windshield wiper switch, terminal **53b**
11 — Hazard flasher switch, terminal **30a**
12 — Rear window wiper/washer, terminal **HW** (Coupe)
13 — Hazard flasher switch, terminal **K**

cardiagn.com

THIS FRAME INTENTIONALLY LEFT

BLANK

cardiagn.com

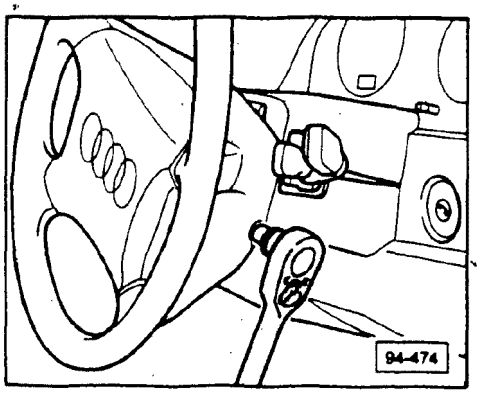

Steering column switches, removing/ installing (vehicles with Airbag)

Removing

CAUTION

Before removing the steering wheel or steering column switches, disconnect the airbag voltage supply connector.

- disconnect battery ground strap
- turn steering wheel to straight ahead position
- remove airbag unit retaining screws (**Torx T30**) from left and right side of steering wheel
- tilt airbag unit down
- remove airbag unit connector retaining strap (**arrows**)
- disconnect airbag unit connector and remove airbag unit

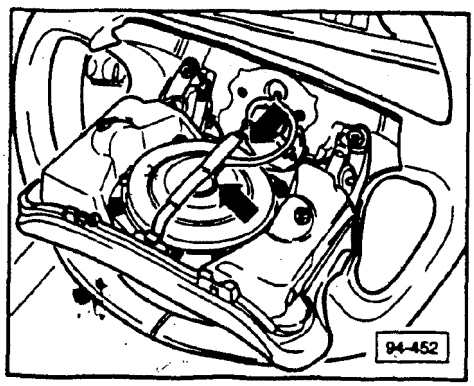

CAUTION

Always place a removed airbag unit so that the horn pad faces upwards.

- remove upper trim retaining screws (**arrows**) and remove upper trim cover

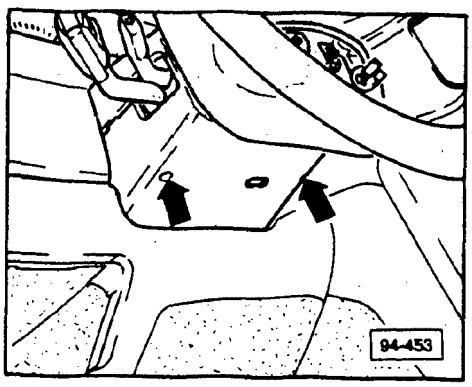

- pull airbag unit connector out of lower trim cover and disconnect (**arrow**)
- remove steering wheel

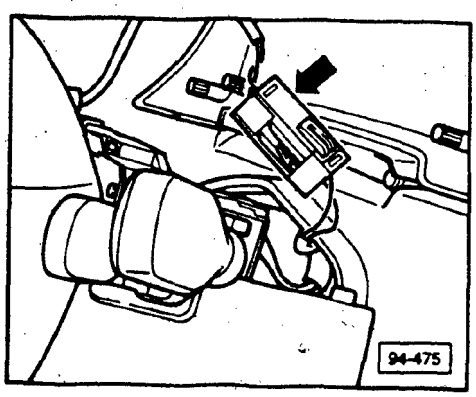

cardiagn.com

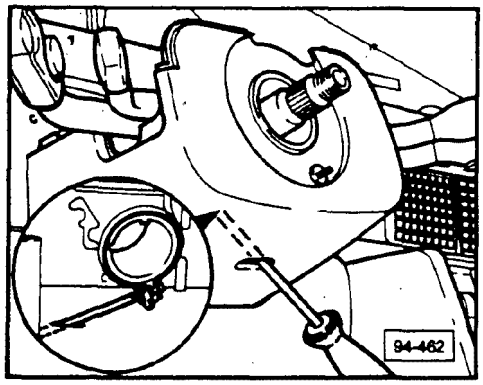

- loosen clamp screw inside steering column cover
- remove steering column switches

Installing

> **CAUTION**
>
> Before installing steering wheel, make sure that turn signal switch is in the centered (straight ahead) position, otherwise the cancelling mechanism cam will be damaged.

- install steering column switches in reverse order of removal
- tighten airbag unit Torx bolts to 6 Nm (53 in. lb)

cardiagn.com

Steering column switches connector terminals, removing/installing

Removing

> **CAUTION**
>
> Do not use a punch or screwdriver to remove terminals or damage to the terminal and/or connector will result.

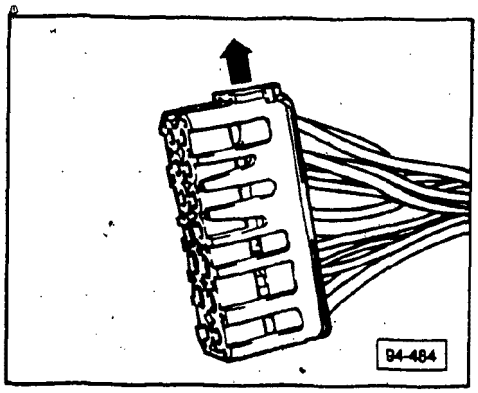

- push slide lock open in direction of (**arrow**)
- remove appropriate terminal and replace or repair as necessary

If replacing terminal,
- properly crimp new terminal to wire

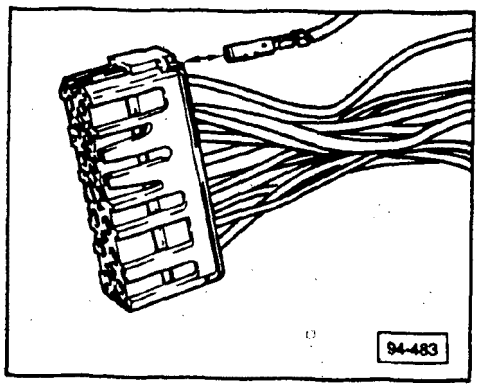

Installing

- insert terminal into proper location of connector
- push sliding lock closed until locked

Note

Use the same procedure to remove/install connector terminals on both the 6-point and 13-point steering column connectors.

cardiagn.com

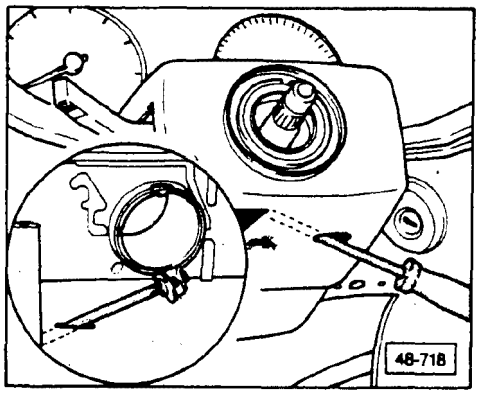

Steering column switches, removing/installing (vehicles without Airbag)

- remove battery ground cable
- remove steering wheel
  - 40 Nm (29.5 ft lb)
- loosen clamp screw inside steering column cover
- pull cover forward and remove electrical connectors
- remove steering column switches

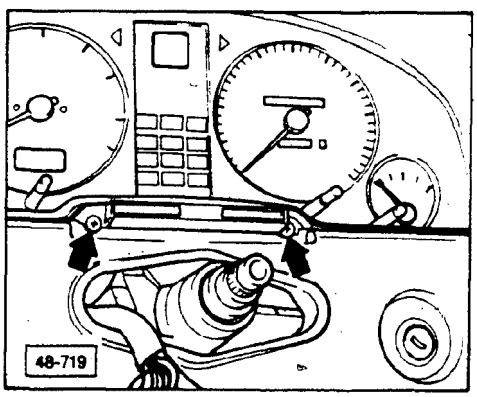

Ignition switch, removing/installing

- remove steering column switches, see Index
- remove instrument cluster retaining screws (**arrows**)
- tilt instrument cluster backwards slightly and remove electrical connectors
- remove instrument cluster

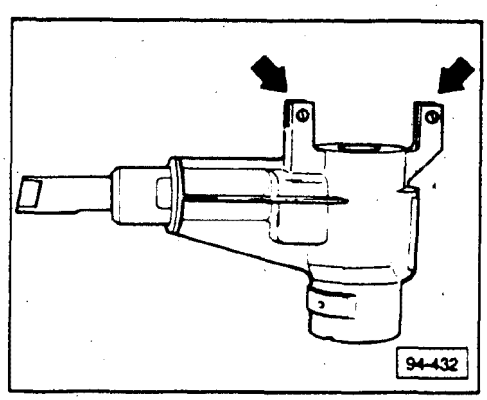

Removing

- clean locking compound from screws
- remove electrical connector
- loosen screws (**arrows**)

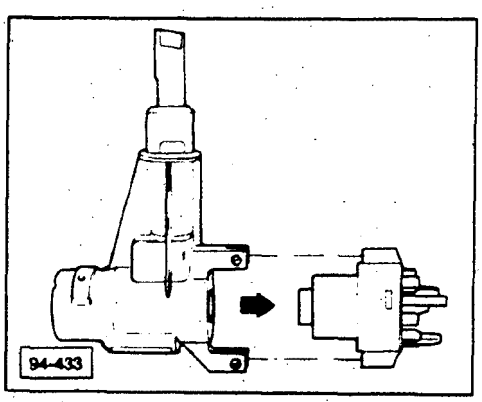

- remove ignition switch in direction of arrow

Installing

- turn ignition switch to **OFF** position
- push switch in until stop
- install both retaining screws and coat with locking compound

cardiagn.com

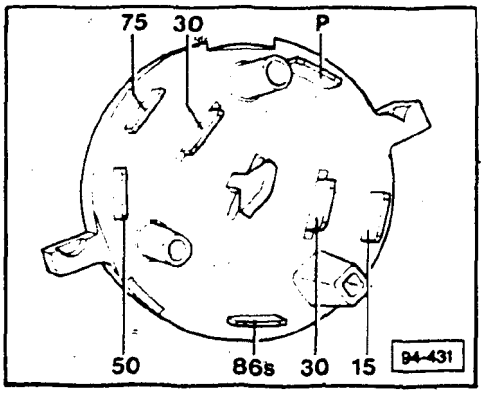

Ignition switch, connections

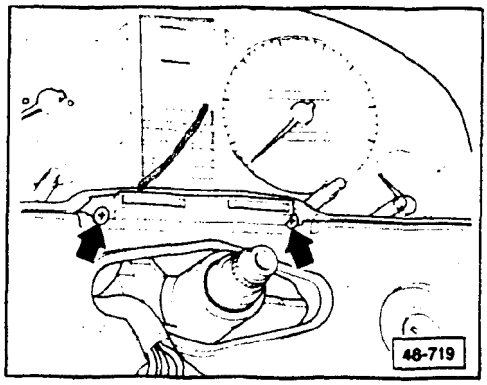

Steering lock housing, removing/installing

Removing

- disconnect battery ground cable
- remove steering wheel center cover
- remove steering wheel
  - 40 Nm (29.5 ft lb)
- remove steering column switches
- remove instrument cluster mounting screws (**arrows**)
- carefully move instrument cluster back and remove electrical connectors
- remove instrument cluster

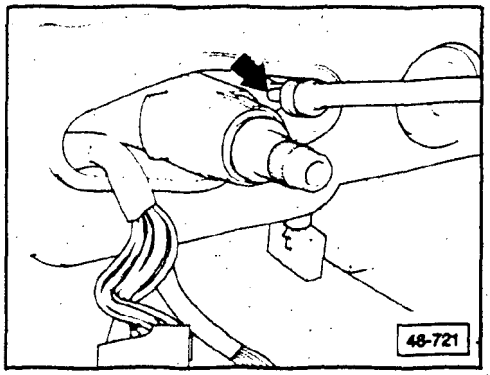

- remove steering lock housing Torx® bolt (**arrow**)
- use bit, Snap-On® #FPXR30 or equivalent

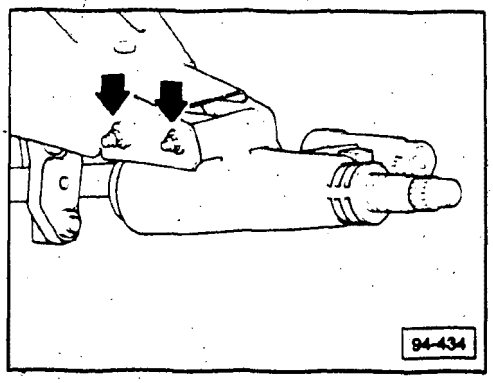

- remove nuts and bolts (**arrows**)
- push steering column tube down until steering lock housing can be removed

cardiagn.com

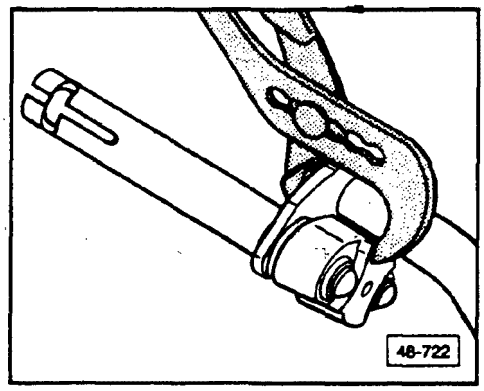

Installing

- press flange and steering column tube together up to stop
- install steering column housing in reverse order of removal

Note

Always replace self-locking nuts on the steering column tube during repairs.

Lock cylinder, removing/installing

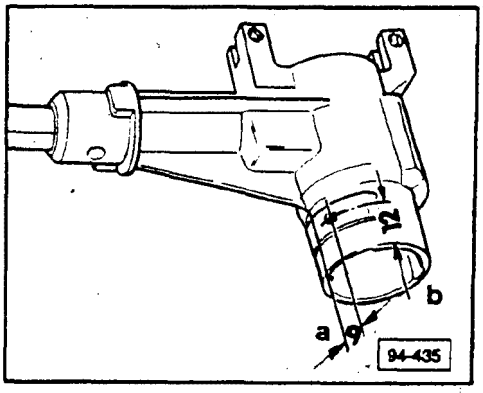

Removing

- remove steering lock housing
- remove ignition switch

- drill steering column housing with 3 mm drill according to illustration
  - **a** = 9.0 mm (.35 in.)
  - **b** = 12.0 mm (.50 in.)

> **CAUTION**
>
> Do not drill too deep or lock cylinder will be damaged.

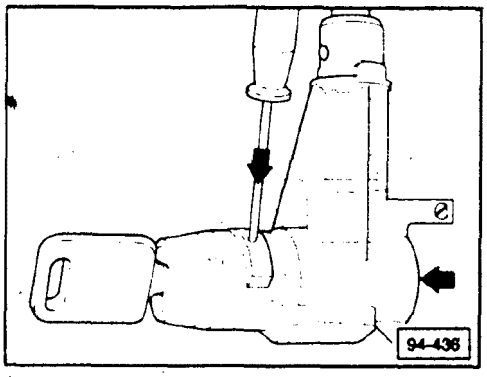

- insert ignition key into lock cylinder
- push down retaining spring through hole with mandrel
- remove lock cylinder

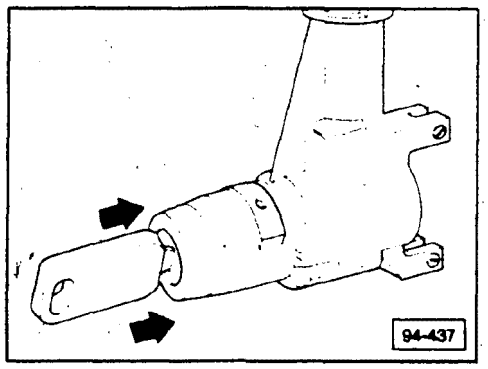

Installing

- insert key into lock cylinder
- insert key with lock cylinder into housing in **OFF** position

cardiagn.com

Index

Auto-check system
- code, checking 96.9
- components 96.3
- control unit, installation location 96.5
- functional testing 96.9
- operation 96.10
- overview 96.2
- removing/installing 96.14

Automatic transmission control unit (J217)
- removing/installing 96.18

Brake fluid level warning switch
- location/checking 96.5

Coolant low level warning switch
- location/checking 96.5

Coolant temperature switch
- checking 96.7
- location 96.6

Electronic thermoswitch
- location 96.8

Engine oil pressure switches
- location/checking 96.6

Hydraulic pressure control switch
- checking 96.8

Lamp control unit
- front 96.7
- rear 96.6

Selector lever display (from 1991)
- connector terminals, checking 96.16
- connector, terminal identification 96.16
- removing/installing 96.15

Voltage supply and output signal
- checking 96.11

Warning symbols
- Canadian vehicles 96.4
- USA vehicles 96.4

Windshield washer fluid level switch
- location/checking 96.6

cardiagn.com

Auto-Check system, overview

The Auto-Check system monitors the function of individual vehicle systems and informs the driver before and during driving about these systems.

When the ignition is switched **ON**, the "OK" symbol is displayed.

If the Auto-Check button is pushed when the key is in **ON** but engine not running, the following symbols will be displayed. See page 96.4.

This will tell you if any bulbs are burned out.

Note

If the engine is running when the Auto-Check button is pushed, the symbols will not appear.

Malfunctions are classified in two groups: **Warning Display** and **Danger Display**.

Warning Display

- brake lights
- brake pad wear
- low beam headlights
- rear lights
- battery voltage
- windshield washer fluid level
- fuel level

If a defect occurs in "warning display" group, the appropriate symbol or letters will appear with or without a yellow triangle. In addition, a buzzer will sound once.

Fluid levels (brake, coolant windshield washer) are displayed as long as the alternator charge warning light (terminal **61**) is connected to ground. If several defects in "Warning Display" group are present at the same time, appropriate symbols are displayed one after the other.

Only the "brake pad wear" symbol appears for as long as the ignition is switched **ON**.

Danger Display

- brake fluid level
- central hydraulic system fluid level
- hydraulic pressure (not in USA)
- cboiant temperature
- oil pressure

If a defect occurs in "danger display" group, appropriate symbol appears in display unit with an illuminated red triangle. In addition, a buzzer sounds three times.

Defects are not stored in the system memory.

Other defect displays are suppressed whenever there is more than one defect in this group.

cardiagn.com

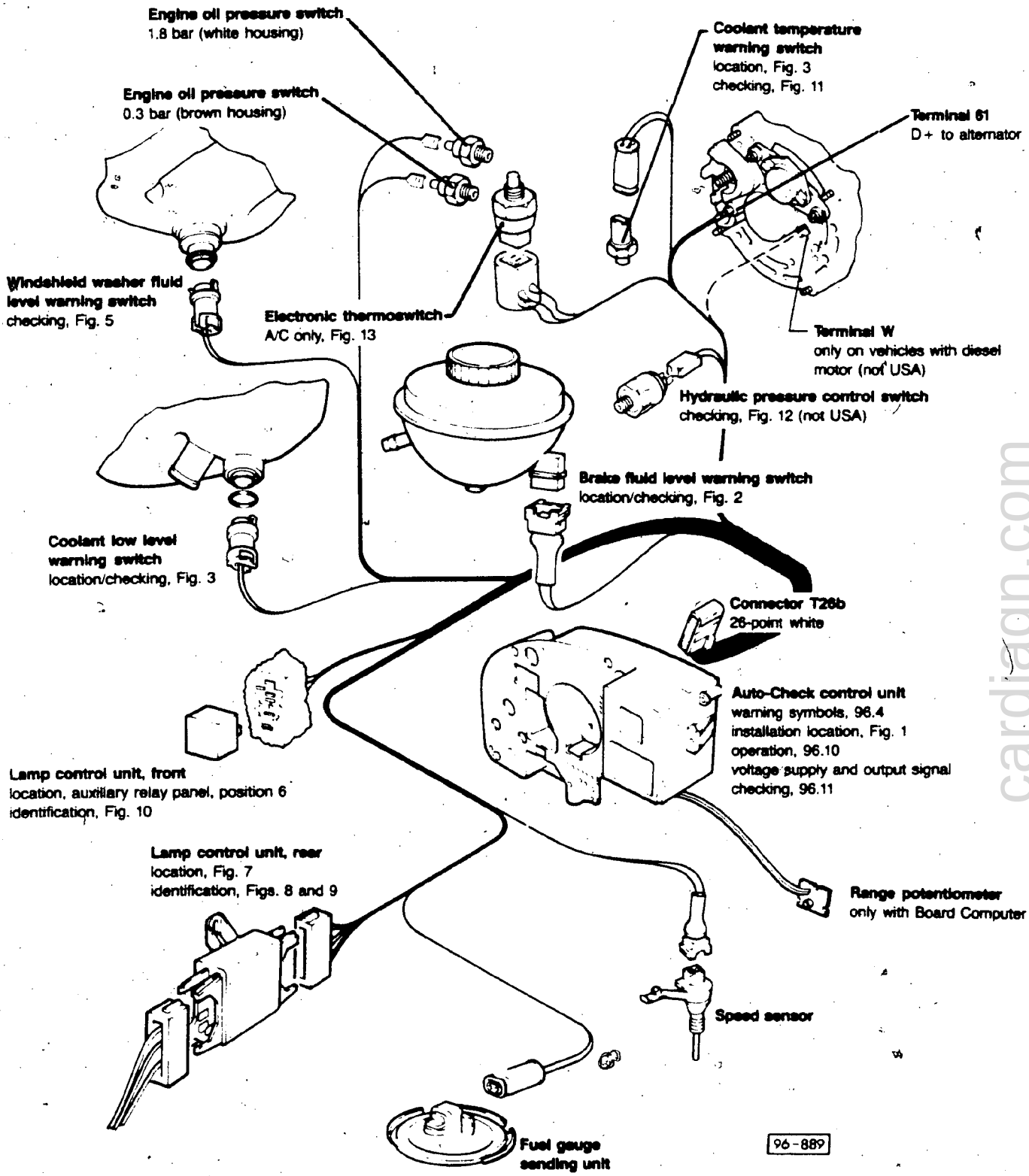

cardiagn.com

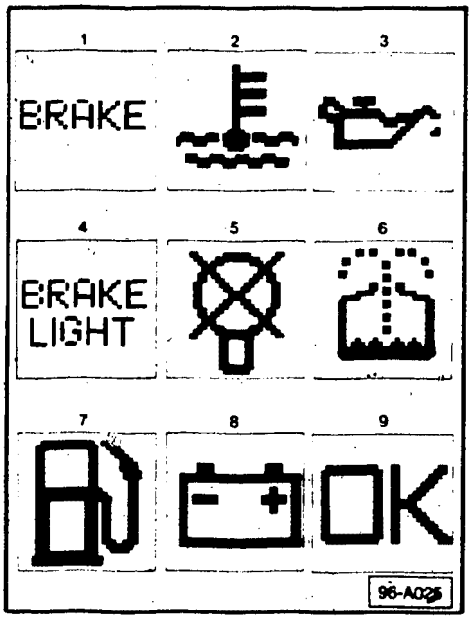

Warning symbols for USA vehicles only

1 — Brake fluid level too low

2 — Coolant level too low
Coolant temperature too high

3 — Engine oil pressure too low

4 — Brake light defective
(fuse, switch, wiring)

5 — Low beam headlight, tail light defective
(fuse, switch, wiring)

6 — Windshield washer fluid level too low

7 — Fuel tank level too low

8 — Battery voltage too low

9 — OK

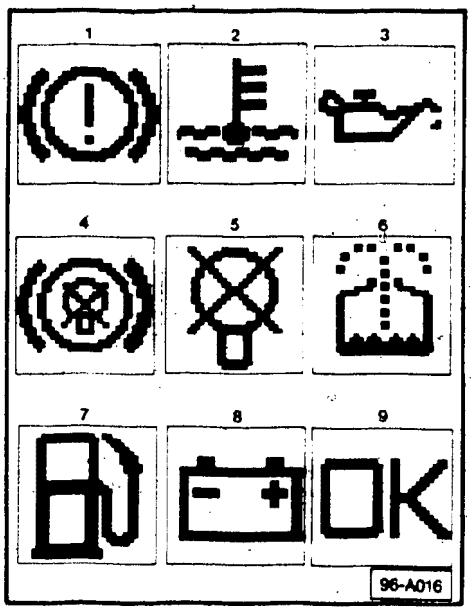

Warning symbols for Canadian vehicles only

1 — Brake fluid level too low

2 — Coolant level too low
Coolant temperature too high

3 — Engine oil pressure too low

4 — Brake light defective
(fuse, switch, wiring)

5 — Low beam headlight, tail light defective
(fuse, switch, wiring)

6 — Windshield washer fluid level too low

7 — Fuel tank level too low

8 — Battery voltage too low

9 — OK

cardiagn.com

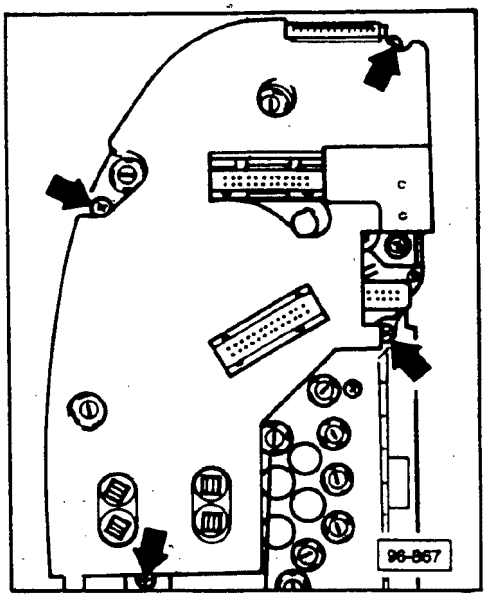

Fig. 1 Auto-Check control unit, installation location

Located in module on back of instrument cluster.

The control unit and display are integrated in a single module.

If the Auto-Check control unit is replaced, the coding must always be checked and re-coded if necessary, page 96.9

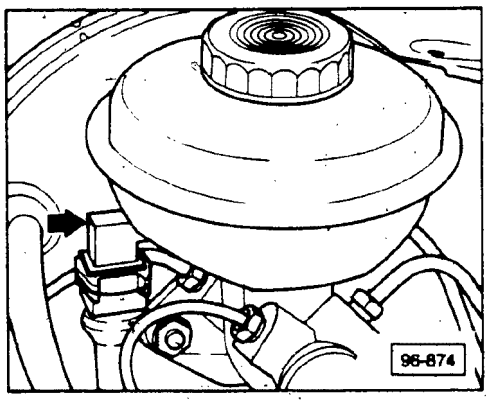

Fig. 2 Brake fluid level warning switch, location/ checking

Warning contact is located on brake fluid reservoir (**arrow**).

Note

Fill brake fluid reservoir before checking.

- remove connector
- connect ohmmeter between contacts of switch
  - ∞ ohms
- remove cover of brake fluid reservoir
- press and hold in pin of switch
  - 0.0 ohms

If specified value is **NOT** obtained,
- replace switch

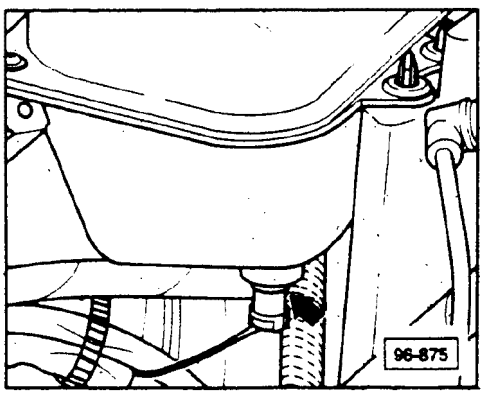

Fig. 3 Coolant low level warning switch, location/ checking

Located in coolant overflow bottle (**arrow**).

- remove connector from switch
- connect ohmmeter between contacts of switch
  - ∞ ohms

If specified value is **NOT** obtained,
- replace switch

cardiagn.com

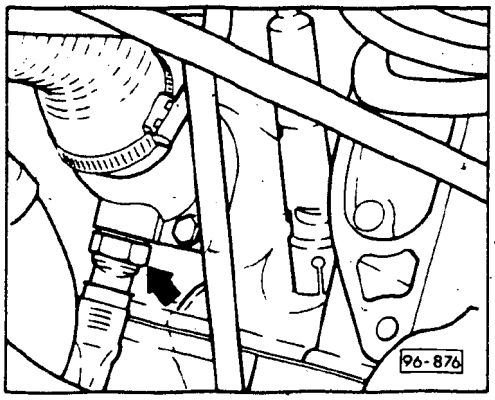

▶ **Fig. 4 Coolant temperature switch (vehicles without A/C)**

Located on bottom of water connector at cylinder head.

Checking, see Fig. 11

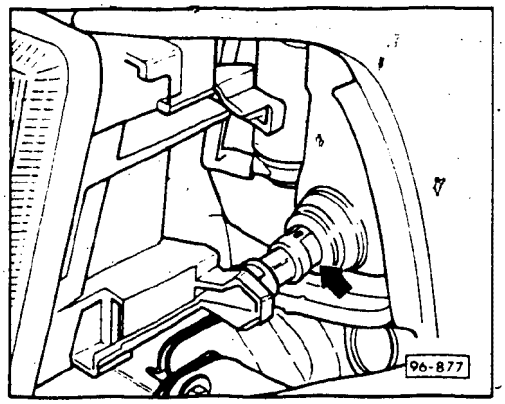

▶ **Fig. 5 Windshield washer fluid level switch, location/checking**

Note

Windshield fluid reservoir must be full before test.

- remove electrical connector
- connect ohmmeter between contacts of switch
  - ∞ ohms

If specified value is **NOT** obtained,
- replace switch

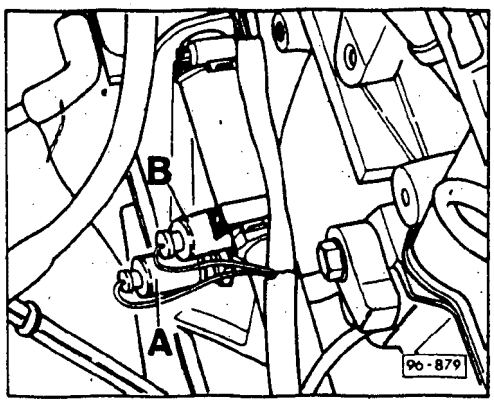

▶ **Fig. 6 Engine oil pressure switches, location/checking**

A = 1.8 bar (white housing)
B = 0.3 bar (brown housing)

- remove wire from switch **A**
- connect ohmmeter between ground and oil pressure switch
  - ∞ ohm

- remove wire from switch **B**
- connect ohmmeter between ground and oil pressure switch
  - 0.0 ohm

If specified values are **NOT** obtained,
- replace respective oil pressure switch

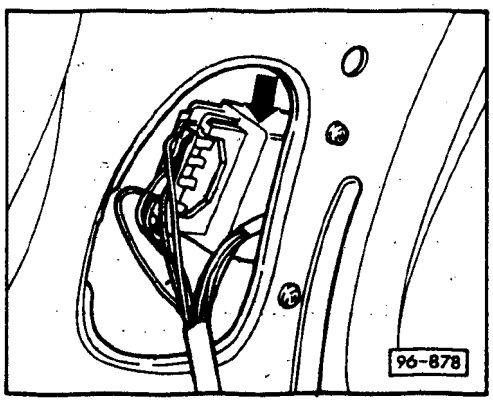

▶ **Fig. 7 Lamp control unit, rear**

Located in left side of luggage compartment.

cardiagn.com

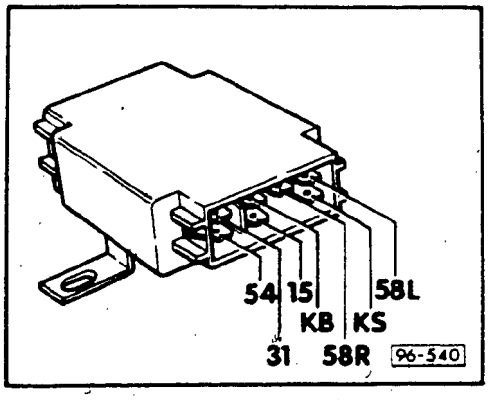

▶ **Fig. 8 Lamp control unit, rear**
(white connector — input)

Terminal	Connected to
KB	T26b (white, contact 25)
KS	T26b (white, contact 18)
15a	T26a (blue, contact 16)
31	ground
54	to brake light switch
58R	fuse/relay panel H58R
58L	fuse/relay panel H58L

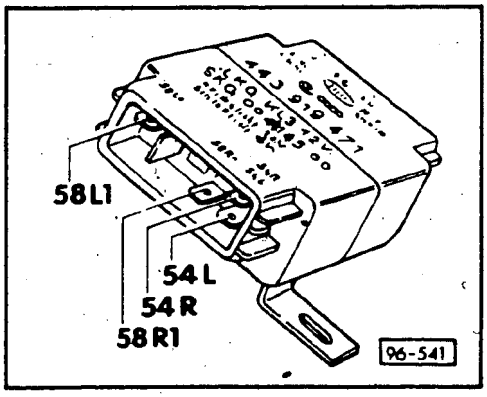

▶ **Fig. 9 Lamp control unit, rear**
(black connector — output)

Terminal	Connected to
54R	brake light, right
54L	brake light, left
58R1	back-up light, right
58L1	back-up light, left

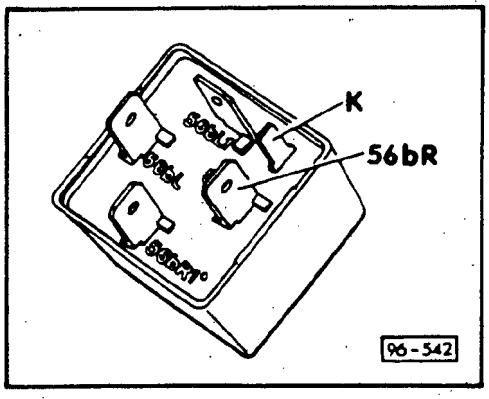

▶ **Fig. 10 Lamp control, front connections on relay**

Terminal	Connected to
K	KS lamp control unit, rear T26b (white — contact 18)
56br	fuse/relay panel D 56br
56bl	fuse/relay panel D 56bl
56br1	headlight, right
56bl1	headlight, left

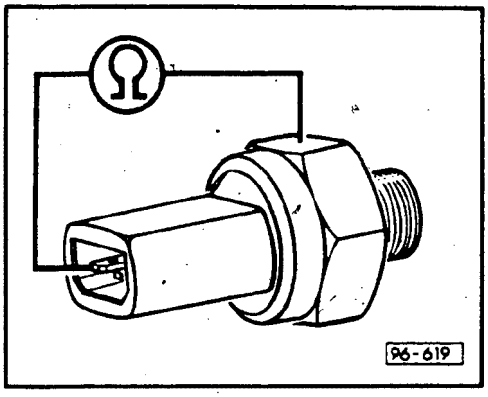

▶ **Fig. 11 Coolant temperature switch, checking**

Note

This does not apply to vehicles with A/C.

- remove electrical connector
- connect ohmmeter to contacts of switch
  - up to 120°C (248°F) ∞ ohms
  - over 120°C (248°F) 0.0 ohms

If specified values are **NOT** obtained,
- replace coolant temperature switch

cardiagn.com

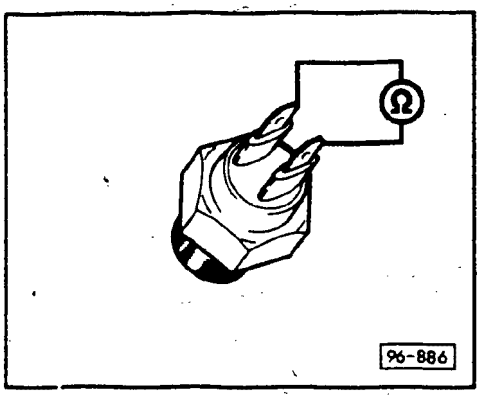

▶ **Fig. 12 Hydraulic pressure control switch, checking** (not in USA)

Note

The hydraulic and brake systems must be **OK** before performing this test.

- remove wire from switch
- connect ohmmeter between the contacts

With engine **NOT** running
- pump brake pedal about 20 times
  - approximately 0.0 ohms
- start motor and run at idle for approximately one minute
  - ∞ ohms

If the specified values are **NOT** obtained,
- replace hydraulic pressure control switch

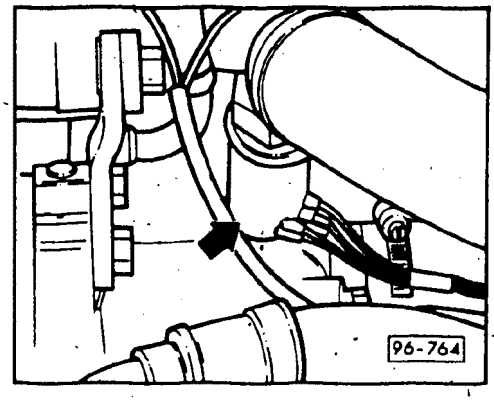

▶ **Fig. 13 Electronic thermoswitch, location**

Located on water connector at cylinder head.

cardiagn.com

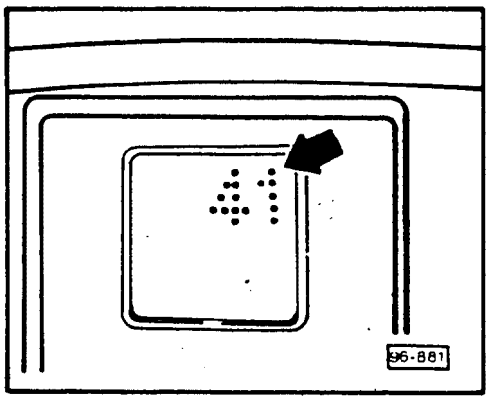

Auto-Check system, functional testing

Note

The functional testing can be done only when the vehicle is not moving.

Auto-Check system code, checking

- push and hold Auto-Check button down
- switch ignition **ON**
- read code displayed

Auto-check codes:

41 to 46 = 4-cylinder motor
51 to 56 = 5-cylinder motor

The coding is always given in two numbers. The first number indicates the number of cylinders. The second number indicates the country variant and type of engine.

Code Table

Switch position	Country variation	Engine
1	German speaking	gas
2	USA	gas
3	non-German speaking	gas
4	German speaking	diesel
5	USA	diesel
6	non-German speaking	diesel

If the coding is **NOT** correct,
- switch ignition **OFF**
- remove instrument cluster
- do not remove connectors

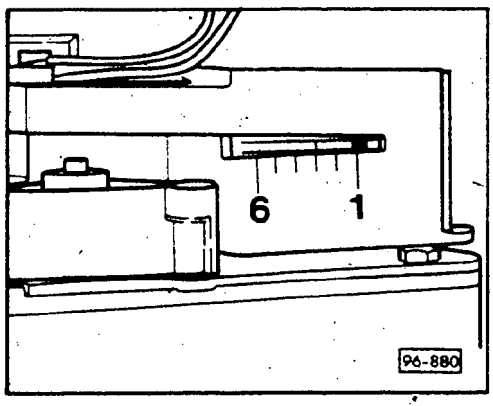

- adjust code switch to match code table above

cardiagn.com

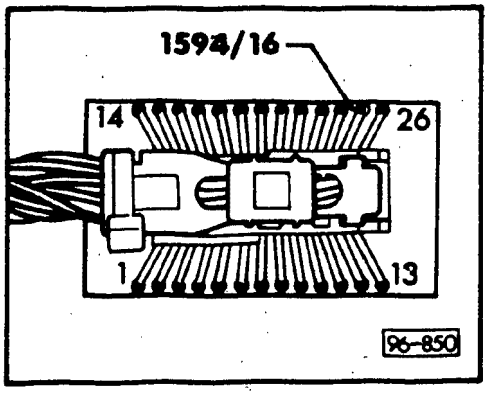

If the code for number of cylinders does not match the engine in the car,

- remove **T26b** (white) from Auto-Check system and attach to **VW 1594/16**
- connect ohmmeter between contact **3** and engine ground
  - 4-cylinder engine — ∞ ohms
  - 5-cylinder engine — 0.0 ohms

If the specified value is **NOT** obtained,

- repair short circuit or open circuit according to wiring diagram

If the specified value is obtained but proper coding is still not displayed,

- check voltage supply and output signals, 96.11
- repeat code test

If code is still not properly displayed,

- replace Auto-Check module

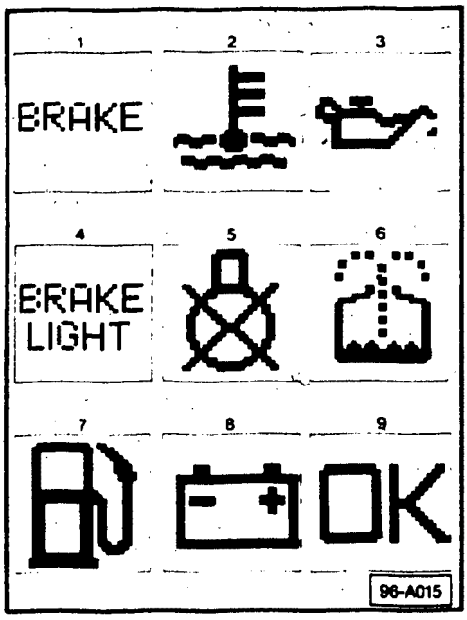

Auto-Check, operation

- switch ignition **ON**

If a defect in one of the monitored systems occurs, the appropriate warning light will light after about one second.

If there are no defects, the **"OK"** symbol will light for about five seconds.

If **"OK"** symbol does not light up, there is a problem with the Auto-Check system or a light bulb has burned out.

If the **"OK"** symbol lights,

- push the Auto-Check button
  - symbols will be displayed

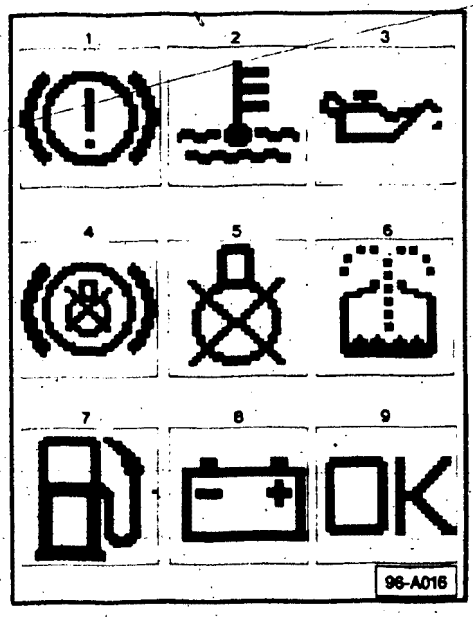

cardiagn.com

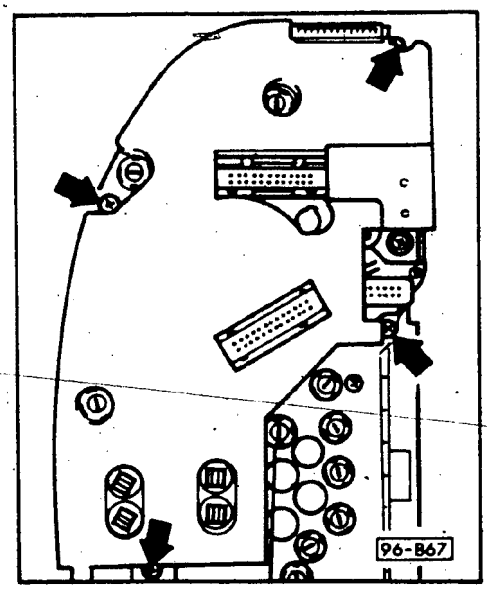

Voltage supply and output signal, checking

- remove instrument cluster
- remove connectors **T26** (yellow) and **T26b** (white)

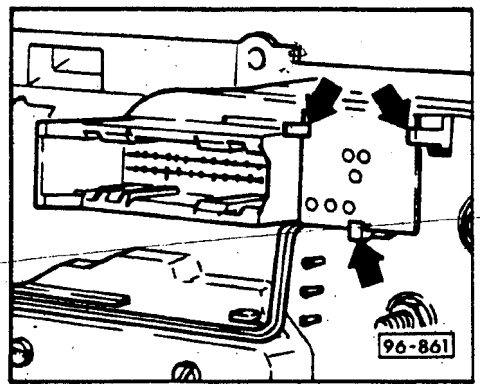

Note

On vehicles with Board Computer,
- remove 10 point connector (black) and unclip range calibration potentiometer (**arrows**)
- remove module from instrument cluster

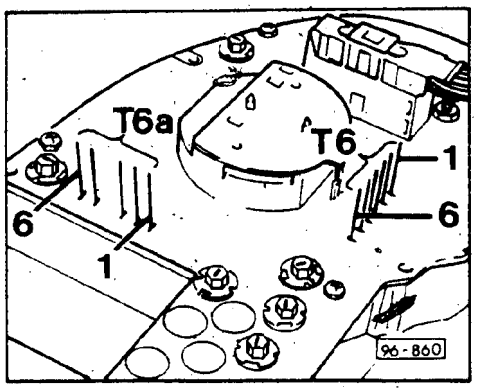

- install connector **T26** (yellow)
- connect voltmeter between contacts **T6/6** and **T6a/3**
  - 12.0V
- connect voltmeter between contacts **T6a/2** and **T6a/3**
- switch ignition **ON** and leave **ON** for remaining tests
  - approximately 12.0V
- connect voltmeter between **T6/1** and **T6a/3**
  - 9.75V-10.3V

If specified values are **NOT** obtained,
- repair break in wiring **OR**
- replace voltage stabilizer

- connect voltmeter between contacts **T6/1** and **T6/2**
  - specified value: 1.5V-5.0V (depending on fuel volume in tank)

cardiagn.com

If specified value is **NOT** obtained,
- repair break in wiring **OR**
- check fuel gauge

- connect voltmeter between contacts **T6/4** and **T6a/3**
- switch parking lights **ON**
  - approximately 12.0V

- connect voltmeter between contacts **T6/5** and **T6a/3**
- switch parking lights **ON** and turn instrument panel light dimmer to full bright position
  - approximately 12.0V

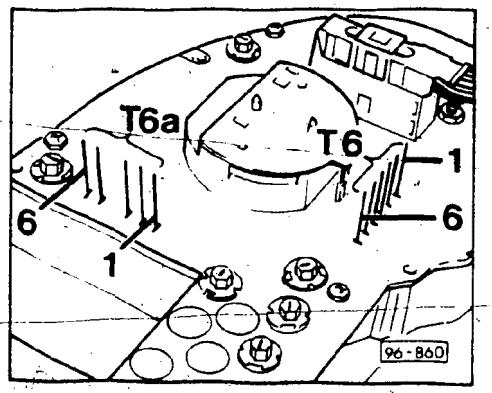

If specified voltages are **NOT** obtained,
- repair break in wiring according to current flow diagram

- connect voltmeter between contacts **T6a/1** and **T6a/3**
  - specified value: 0-4.0V

- start engine and let idle
  - specified value: 14.0V

If the specified values are **NOT** obtained,
- repair break in wiring **OR**
- check alternator output

- connect voltmeter between contacts **T6a/2** and **T6a/5**
- press brake fluid level warning switch in brake fluid reservoir
  - specified value: approximately 12.0V

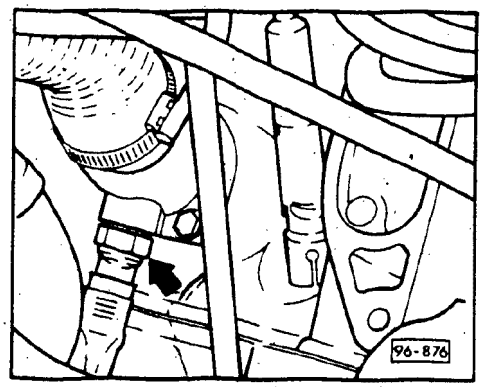

- connect voltmeter between contacts **T6a/2** and **T6a/6**

For vehicles without A/C

- remove connector from coolant temperature sensor
- connect blue/white wire in cavity 2 to ground with jumper wire
  - approximately 12.0V

If the specified values are **NOT** obtained,
- repair break in wiring according to current flow diagram

cardiagn.com

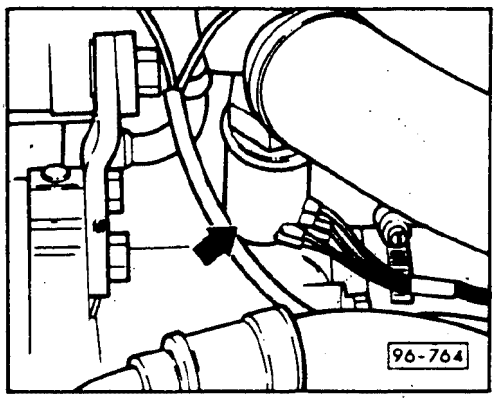

For vehicles with A/C

- remove connector from electronic thermoswitch (**arrow**)

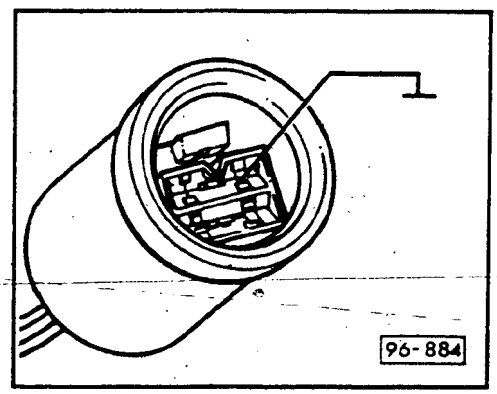

- connect blue/white wire to ground with jumper wire
  - approximately 12.0V

If specified values are **NOT** obtained,
- repair break in wiring according to current flow diagram

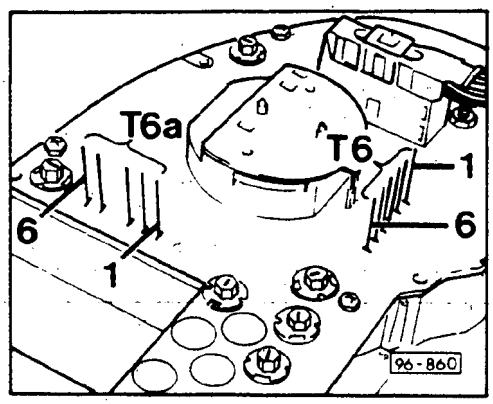

- connect voltmeter between contacts **T6/3** and **T6a/3**
- place transmission in neutral and apply parking brake
- secure vehicle with wheel chocks to prevent rolling
- raise left front of vehicle at proper lift point until wheel turns freely
- place jack stand under vehicle for safety
- slowly rotate wheel
  - reading must alternate between 0.0 ohms and ∞ ohms

If specified values are **NOT** obtained,
- repair break in wiring according to current flow diagram **OR** replace speed sensor

cardiagn.com

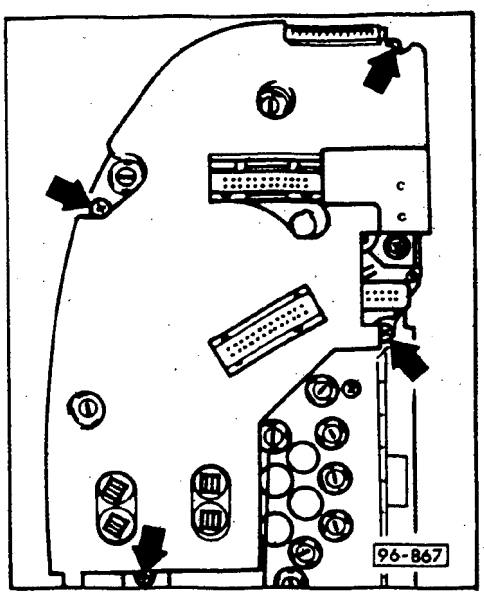

If specified values from all tests are obtained,
- install Auto-Check module and all connectors
- perform Auto-Check test

If all specified values were obtained and defects are still indicated on the Auto-Check display,

- replace Auto-Check module

Auto-Check system, removing/ installing

- remove instrument cluster
- remove electrical connectors

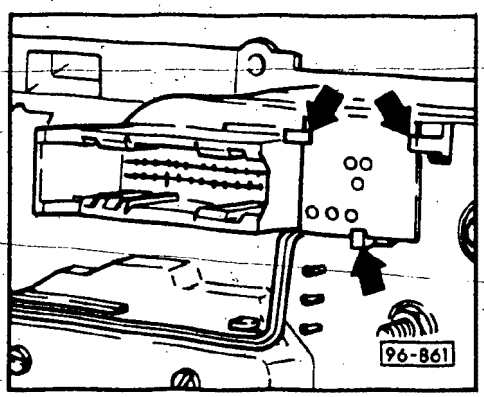

Note

On vehicles with Board Computer,
- remove range potentiometer (**arrows**)
- remove Auto-Check module from instrument cluster

Auto-Check system, removing/ installing from module

(only for vehicles with Auto-Check system and Board Computer)

- remove coding terminal from Board Computer
- remove screws (**arrows**)
- separate module halves without distorting them
- store module and protect from dirt

Note

Be sure module halves are not distorted during installation.

cardiagn.com

Selector lever display, removing/ installing, terminal identification/ checking

General notes

Beginning with 1991 m.y., a selector lever display is installed in the instrument cluster on vehicles equipped with the four-speed automatic transmission.

The selector lever display uses the following inputs:

- selector lever signal from automatic transmission control unit
- ground (−), terminal **31**
- instrument illumination (terminal **58b**)
- plus (+), terminal **15a**

Note

Always use appropriate wiring diagram when troubleshooting.

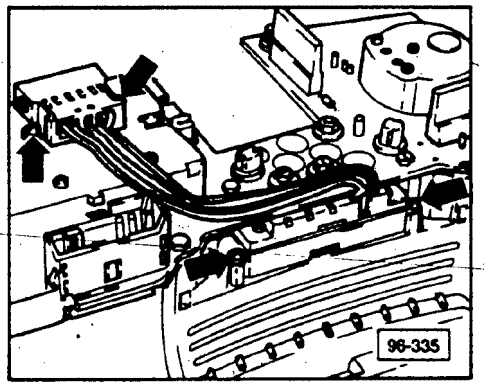

Selector lever display, removing/installing

- remove instrument cluster, see Repair Group 90
- disconnect five-point selector lever display connector
- remove connector securing screws (**upper arrows**)
- remove selector lever display screws (**lower arrows**)
- remove selector lever display
- install in reverse order of removal

Note

If the instrument cluster is replaced, remove the cover over the selector lever display window on the new instrument cluster before installing.

cardiagn.com

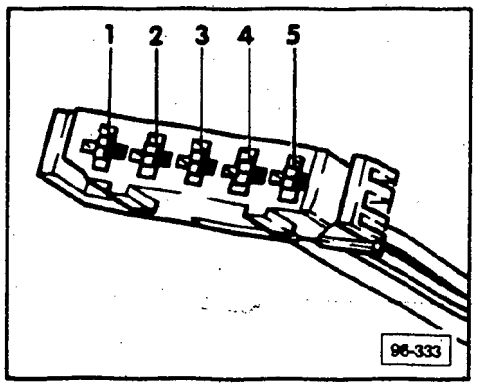

Five-point selector lever display connector, terminal identification

1 Selector lever (gear) signal (from automatic transmission control unit, **J217**)
2 Ground (–)
3 Instrument illumination, terminal **58b**
4 Plus (+), terminal **15a**
5 Open

Five-point selector lever display connector terminals, checking

- remove instrument cluster (leave instrument cluster connectors attached), see Repair Group 90
- disconnect five-point selector lever display connector

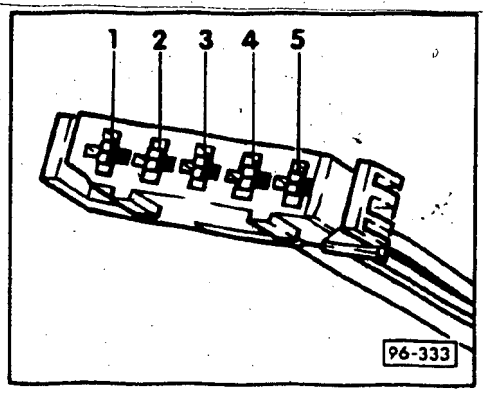

Terminal 1 — Selector lever (gear) signal

- connect digital multimeter **Fluke 83 (US 1119)** set to volt range between terminal **1** of selector lever display connector and ground
- switch ignition **ON**

Gear selector position	Specified value
P	approximately 6.0 V
R	approximately 4.2 V
N	approximately 3.4 V
D	approximately 2.8 V
3	approximately 2.5 V
2	approximately 2.2 V
1	approximately 2.0 V

Terminal 2 — Ground (–)

- switch ignition **OFF**
- connect digital multimeter **Fluke 83 (US 1119)** set to Ohm range between terminal **2** of selector lever display connector and ground
  - must be 0 Ohm (continuity)

cardiagn.com

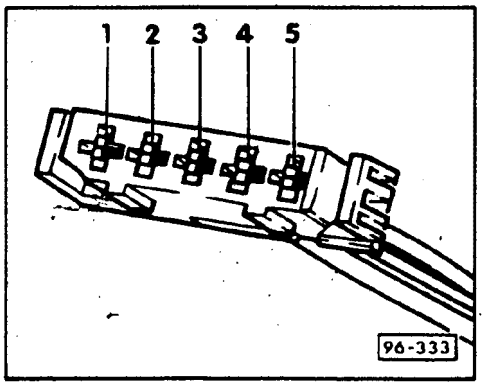

Terminal 3 — Instrument illumination, terminal 58b

- connect digital multimeter **Fluke 83 (US 1119)** set to volt range between terminal **3** of selector lever display connector and ground
- switch parking lights **ON**
  - must be approximately 2.75-12.0 V depending on position of instrument panel light dimmer

Terminal 4 — Plus (+), terminal 15a

- connect digital multimeter **Fluke 83 (US 1119)** set to volt range between terminal **4** of selector lever display connector and ground
- switch ignition **ON**
  - must be approximately 12 V (battery voltage)

Terminal 5 — Open

cardiagn.com

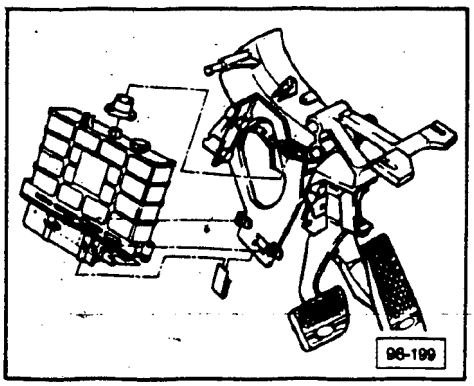

Automatic transmission control unit (J217), removing/installing

- remove lower left instrument panel cover
- unlatch control unit connector securing clip
- remove connector from control unit
- remove control unit from bracket on brake pedal assembly
- install in reverse order of removal

cardiagn.com

Index

Auxiliary relay panel
- assembly 97.15
- relay identification (1988 80/90) 97.16
- relay identification (1989/90 80/90, 1990 Coupe) 97.17
- removing/installing 97.18

Auxiliary fuse holders (from 1990)
- color identification 97.5
- removing/installing 97.4

Component locations
- engine compartment (4-cylinder) 97.36, 97.38
- locations, engine compartment (20V) 97.42
- locations, rear (Coupe Quattro) 97.41

Connectors
- removing 97.3
- rubber insulating grommet, modifying 97.3

Connector station
- identification 97.19

Control units
- locations (1988–1989) 97.31
- locations (1990) 97.32
- locations (80/90, 80/90 Quattro) 97.34
- locations (Coupe Quattro) 97.40

Fuse/relay panel
- assembly 97.2
- relay identification (1988 80/90) 97.10
- relay identification (1989/90 80/90, 1990 Coupe) 97.12
- wiring connections 97.14

Fuses
- location/identification (1988 80/90) 97.6
- location/identification (1989/90 80/90, 1990 Coupe) 97.8
- removal 97.3

Ground connections
- locations 97.20

Welded plus (+) connections
- locations 97.22

cardiagn.com

CAUTION

Before working on any part of electrical system disconnect battery ground strap

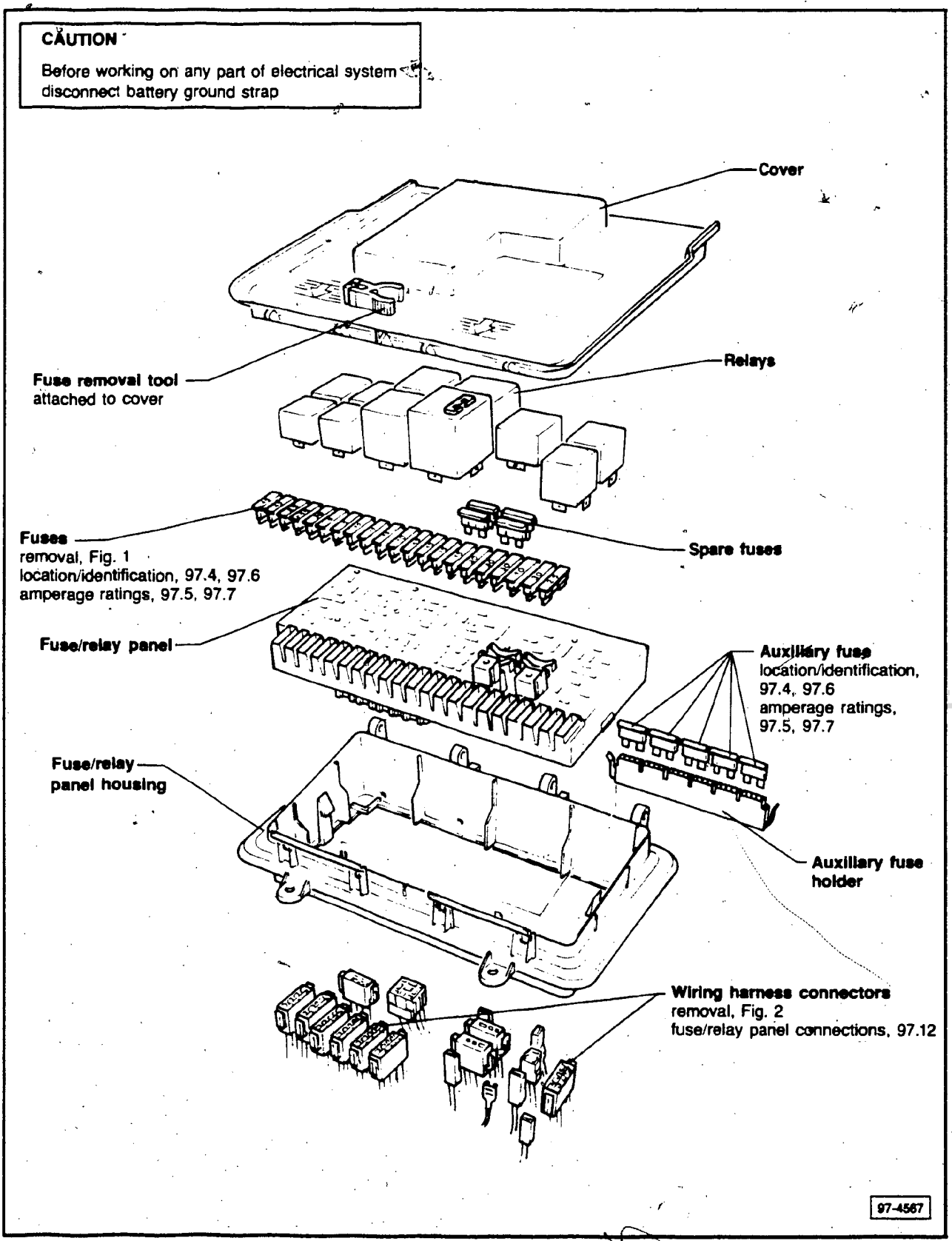

cardiagn.com

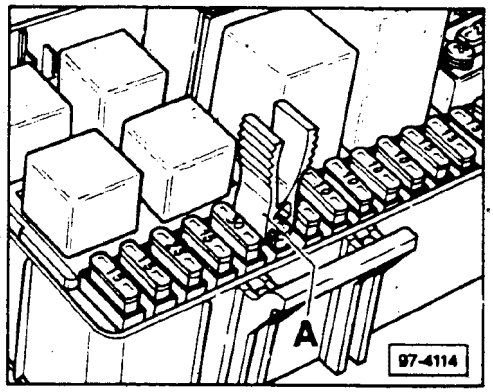

▶ **Fig. 1 Fuses, removal**

- remove special tool from fuse/relay panel cover
- grab fuse with special tool and pull

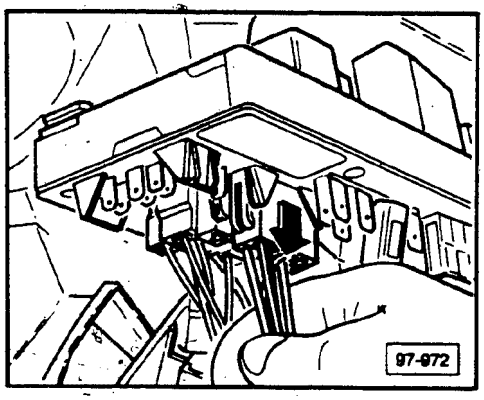

▶ **Fig. 2 Connector housings, removal from fuse/relay panel**

- hold wires and housing firmly and pull in direction of arrow

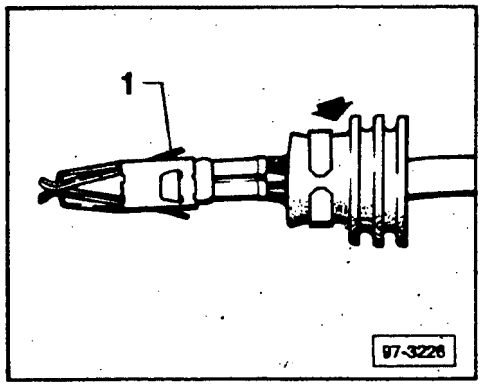

Connector terminal rubber insulating grommet, modifying

▶ A rubber insulating grommet (**arrow**) is installed on some connector terminals at the factory. During wiring repair, the rubber insulating grommet must be reversed before re-inserting into the connector housing.

- remove and discard terminal 1
- slide rubber insulating grommet from wire and rotate end-to-end (180°)
- inspect grommet and replace if damaged

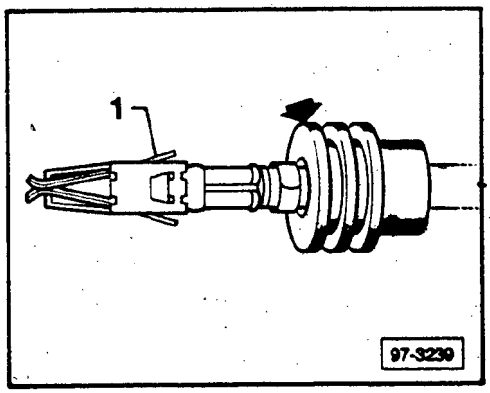

CAUTION

New replacement grommet must be the same color as original to ensure proper sealing between wire, grommet and housing.

▶
- reinstall grommet onto wire so that collar (**arrow**) faces terminal 1
- properly crimp new terminal 1 to wire

cardiagn.com

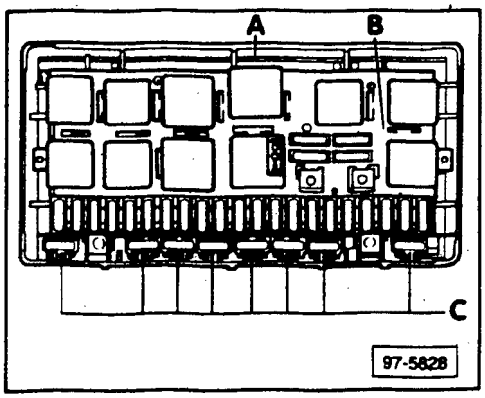

Auxiliary fuse holders, removing/ installing

Starting with 1990 model year, auxiliary fuse holders can be removed/installed separately. The fuse holders are mounted to the inner side of the fuse/relay panel housing.

A — fuse/relay panel housing
B — fuse/relay panel
C — auxiliary fuses and holders

Removing

- remove fuse/relay panel cover
- remove (unclip) fuse/relay panel from housing (leave all connectors attached) and move out of way

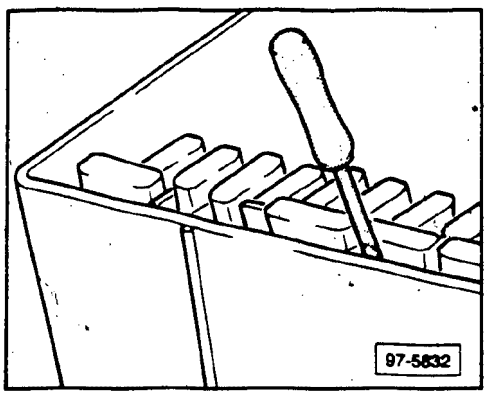

- using a small screwdriver, release locking tab on auxiliary fuse holder

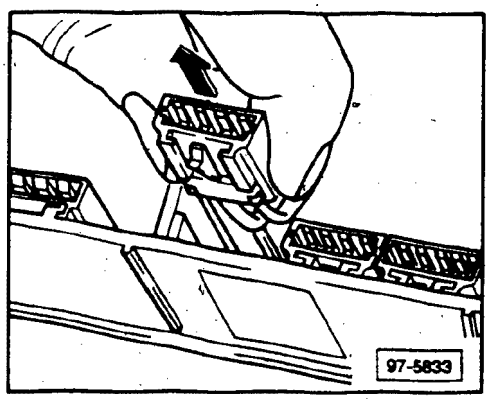

- pull auxiliary fuse holder upwards from housing (**arrow**)

Installing

- slide auxiliary fuse holder into proper location until locking tab (**arrow**) engages
- install fuse/relay panel into housing
- install fuse/relay panel cover

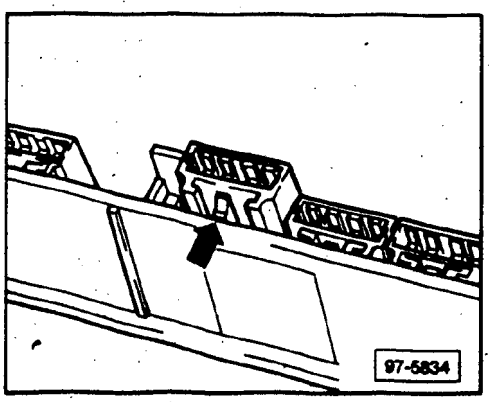

cardiagn.com

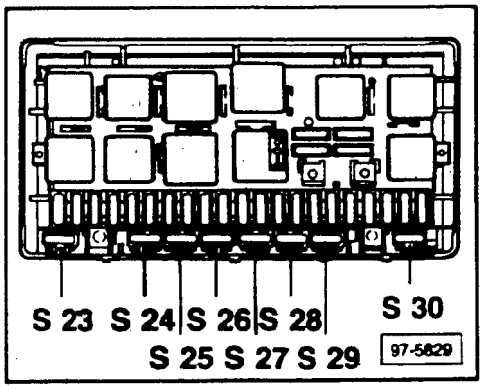

Auxiliary fuse holders, color identification

For the following fuses:

S 23 — black
S 24 — blue
S 25 — red
S 26 — yellow
S 27 — brown
S 28 — white
S 29 — green
S 30 — gray

Note

Eight auxiliary fuse positions can be used. See appropriate wiring diagram for proper fuse application.

A red plastic cover labeled "Motor" is installed over the electronic engine control fuses to prevent accidental fuse removal.

cardiagn.com

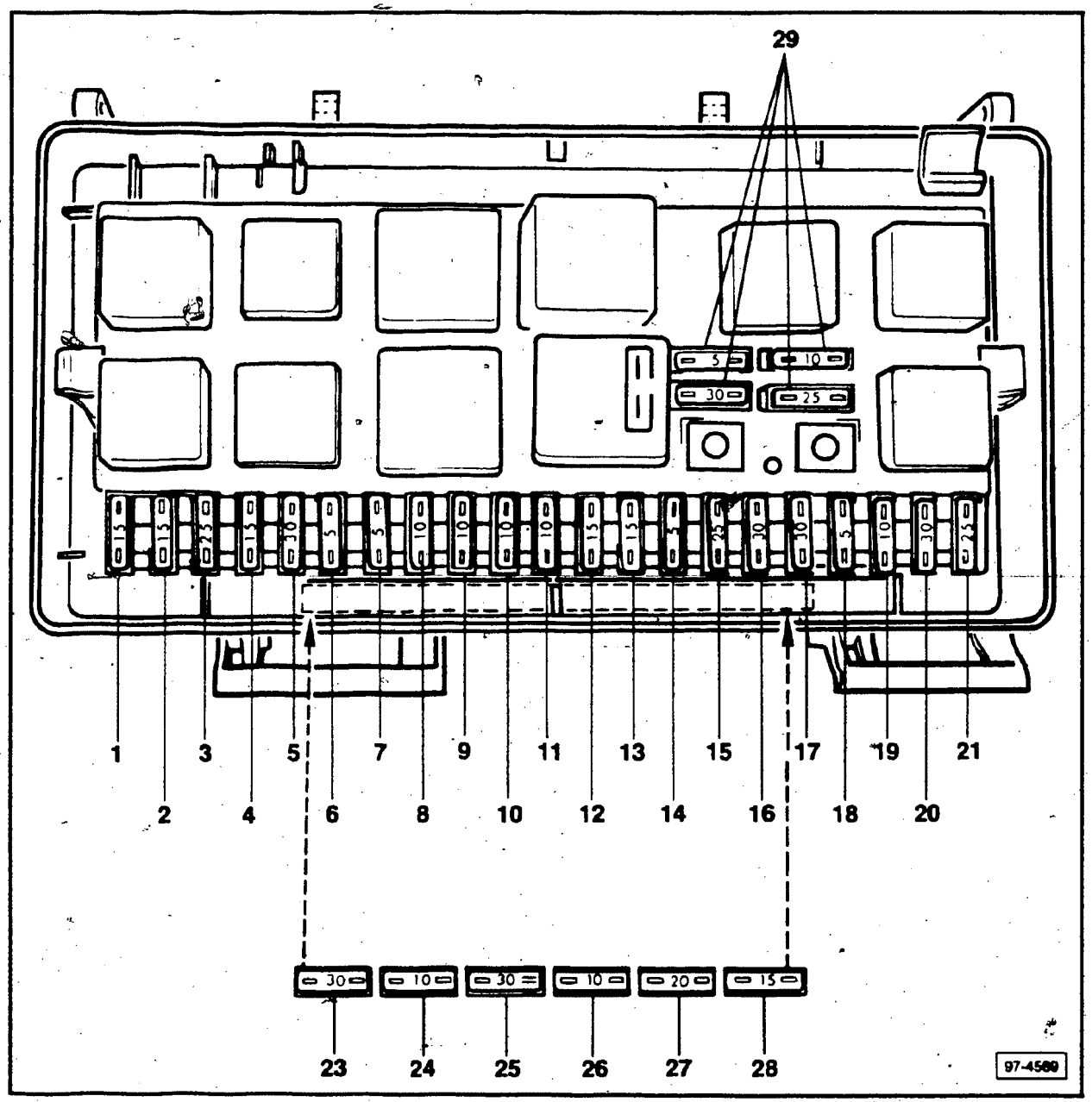

cardiagn.com

Fuse locations and identification

Fuse	Description	Amps
1	Fog lights, rear fog light	15
2	Emergency flashers	15
3	Horn, brake lights	25
4	Reading lights, luggage compartment, cigar lighter, interior lights, make-up mirror, Board Computer, radio	15
5	Radiator cooling fan	30
6	Side marker, park lights, right	5
7	Side marker, park lights, left	5
8	Hi-beam headlight right, hi-beam indicator light	10
9	Hi-beam headlight, left	10
10	Low beam headlight, right	10
11	Low beam headlight, left	10
12	Instrument cluster, back-up lights, Auto-Check, cruise control, ABS, Board Computer differential locks, throttle valve time control unit, electronic thermoswitch, radiator cooling fan after-run control unit	15
13	Fuel pump, warm-up regulator	15
14	Glove compartment, engine compartment, license plate lights	5
15	Windshield wipers, thermoswitch radiator cooling fan, A/C pressure switch	25
16	Rear window heat element, outside mirror heat element	30
17	Fresh air blower	30
18	Power mirrors	5
19	Central locking system	10
20	Radiator cooling fan (step 1), radiator cool fan after-run	30
21	Rear cigar lighter	25
22	Not used	
23	Power seats with memory	30
24	Engine control I	10
25	Heated seats	30
26	Not used	
27	Not used	
28	Engine control II	15
29	Spare fuses (5A, 10A, 25A, 30A)	

cardiagn.com

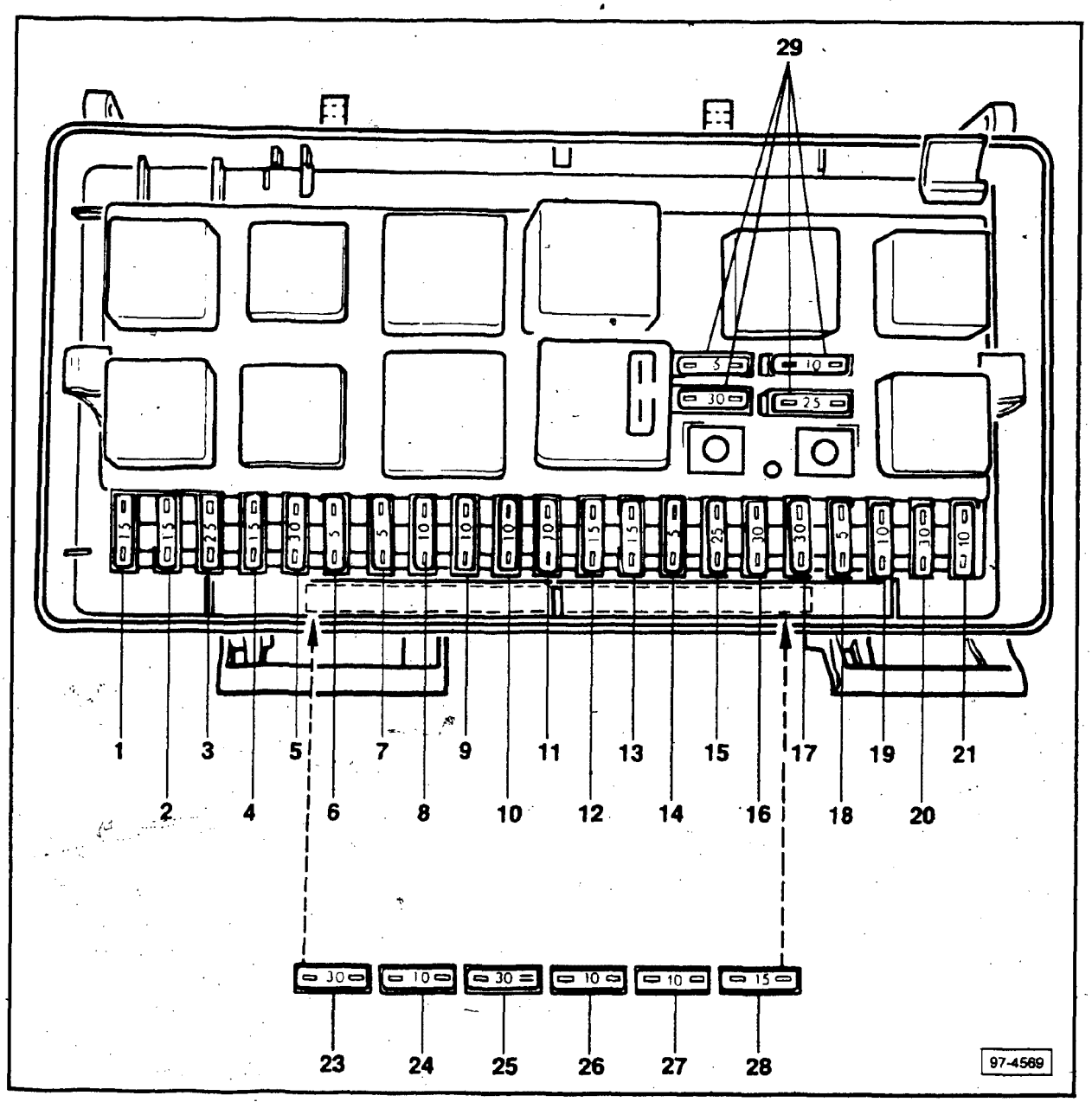

cardiagn.com

Fuse locations and identification

Fuse	Description	Amps
1	Fog lights, rear fog light	15
2	Emergency flashers	15
3	Horn, brake lights	25
4	Reading lights, luggage compartment, cigar lighter, interior lights, make-up mirror, Board Computer, radio, clock, auto climate control, alarm system	15
5	Radiator cooling fan	30
6	Side marker, park lights, right	5
7	Side marker, park lights, left	5
8	Hi-beam headlight, right, hi-beam indicator light	10
9	Hi-beam headlight, left	10
10	Low beam headlight, right	10
11	Low beam headlight, left	10
12	Instrument cluster, back-up lights, Auto-Check, cruise control, ABS, Board Computer, differential locks, electronic thermoswitch	15
13	Fuel pump, warm-up regulator	15
14	Glove compartment, engine compartment, license plate lights	5
15	Windshield wipers, thermoswitch, radiator cooling fan, A/C, turn signals	25
16	Rear window heat element, outside mirror heat element	30
17	Fresh air blower, A/C	30
18	Power mirrors, rear window wiper (Coupe)	5
19	Central locking system, heated lock system	10
20	Radiator cooling fan (step 1), radiator cool fan after-run	30
21	Diagnostic	10
22	Not used	
23	Power seats with memory, power seat control unit	30
24	Not used	
25	Heated seats	30
26	Daytime driving lights (Canada)	5
27*	Engine control I (from September, 1987)	10
28*	Engine control II	15
29	Spare fuses (5A, 10A, 25A, 30A)	

* Beginning in December, 1987, a red plastic cover (identified with "Motor") has been installed over fuses 27 and 28 to prevent inadvertent fuse removal.

cardiagn.com

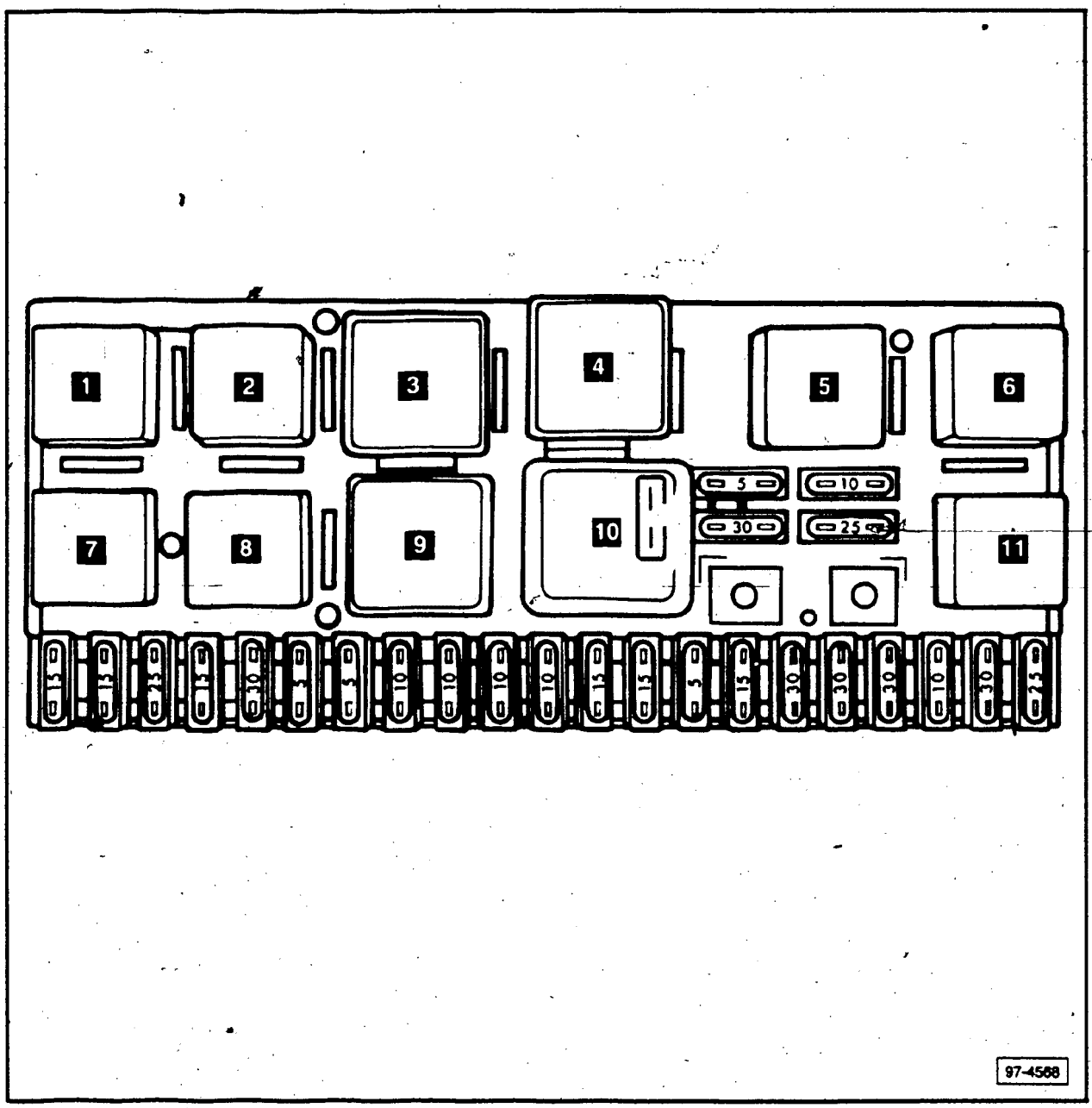

1 Fog lights, J5
2 Radiator cooling fan (stage 2), J101
3 Radiator cooling fan after-run control unit, J138
4 not used
5 Load reduction relay, J18
6 A/C fresh air blower, J11
7 Horn, J4
8 Bridge between contact 36 and 38 for manual transmissions
8 Auto transmission, J60
9 Intermittent washer/wiper, J31
10 Fuel pump, J17
11 Radiator cooling fan (stage 1), J26

cardiagn.com

Identification of contacts on fuse/relay panel

Relay position	Contact number	Number on relay	Usage:
1	10 11 12 13	86 30 85 87	Fog lights
2	14 15 16 17 18	30 85 87a 87 86	Radiator cooling fan high speed relay
3	1 2 3 4 5 6 7 8 9	15 30 31 T ST1 87	Radiator cool fan after-run control unit
4			Open
5	24 25 26 27	30 85 87 86	Load reduction relay
6	58 28 29 30 31	 86 87a 30 85	A/C relay
7	32 33 34 35	87 86 30 85	Horn
8	36 37 38 39	87 86 30 85	Auto transmission
9	40 41 42 43 44 45	53e 53c 31b 15 31 I	Intermittent washer/wiper
10	46 47 48 49 50 51 52 53 59	15 T 30 L 31 1 87	Fuel pump
11	54 55 56 57	87 86 30 85	Radiator cooling fan low speed relay

cardiagn.com

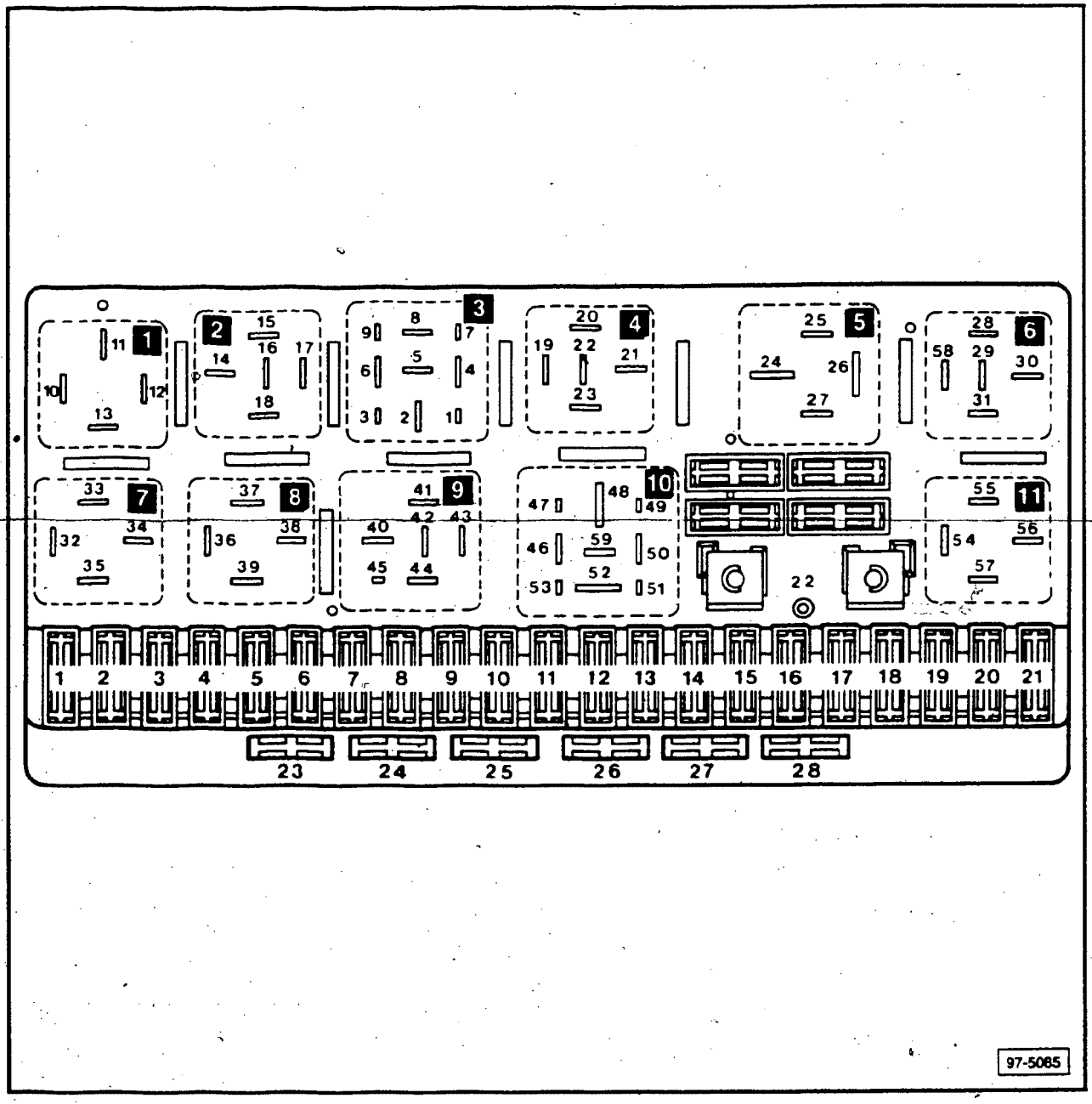

1 Fog lights, J5

2 Open

3 Radiator cooling fan after-run control unit, J138

4 Headlight washer system, J39

5 Load reduction relay, J18

6 Radiator cooling fan high speed relay, J101

7 Horn, J4

8 Bridge between contact **36** and **38** for manual transmissions

8 Auto transmission, J60

9 Intermittent washer/wiper, J31

10 Fuel pump, J17

11 Radiator cooling fan low speed relay, J26

cardiagn.com

Identification of contacts on fuse/relay panel

Relay position	Contact number	Number on relay	Usage:
1	10 11 12 13	86 30 85 87	Fog lights
2			Open
3	1 2 3 4 5 6 7 8 9	15 30 31 T ST1 87	Radiator cool fan after-run control unit
4	19 20 21 22 23	30 85 86 87	Headlight washer system
5	24 25 26 27	30 85 87 86	Load reduction relay
6	58 28 29 30 31	87 86 87a 30 85	Radiator cooling fan high speed relay
7	32 33 34 35	87 86 30 85	Horn
8	36 37 38 39	87 86 30 85	Auto transmission Jumper bridge (manual transmission)
9	40 41 42 43 44 45	53e 53c 31b 15 31 I	Intermittent washer/wiper
10	46 47 48 49 50 51 52 53 59	15 T 30 L 31 1 87	Fuel pump
11	54 55 56 57	87 86 30 85	Radiator cooling fan low speed relay

cardiagn.com

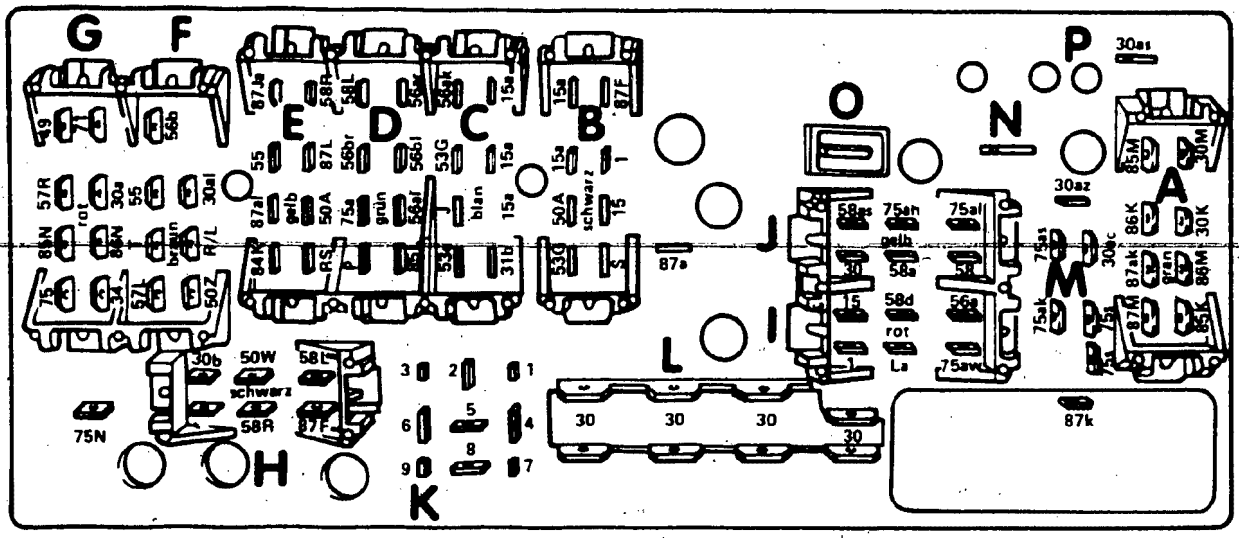

A — Air conditioning connector color: gray
B — Right front wiring harness connector color: black
C — Instrument panel connector color: blue
D — Left front wiring harness connector color: green
E — Left front wiring harness connector color: yellow
F — Instrument panel connector color: brown
G — Instrument panel connector color: red
H — Rear wiring harness connector color: black
I — Instrument panel connector color: red
J — Instrument panel connector color: yellow
K — Connected to relay **3** connector color: black
L — Single connector (terminal **30**) connector color: colorless
M — For optional equipment connector color: colorless
N — not used
O — not used
P — To fuse **20**

cardiagn.com

THIS FRAME INTENTIONALLY LEFT

BLANK

cardiagn.com

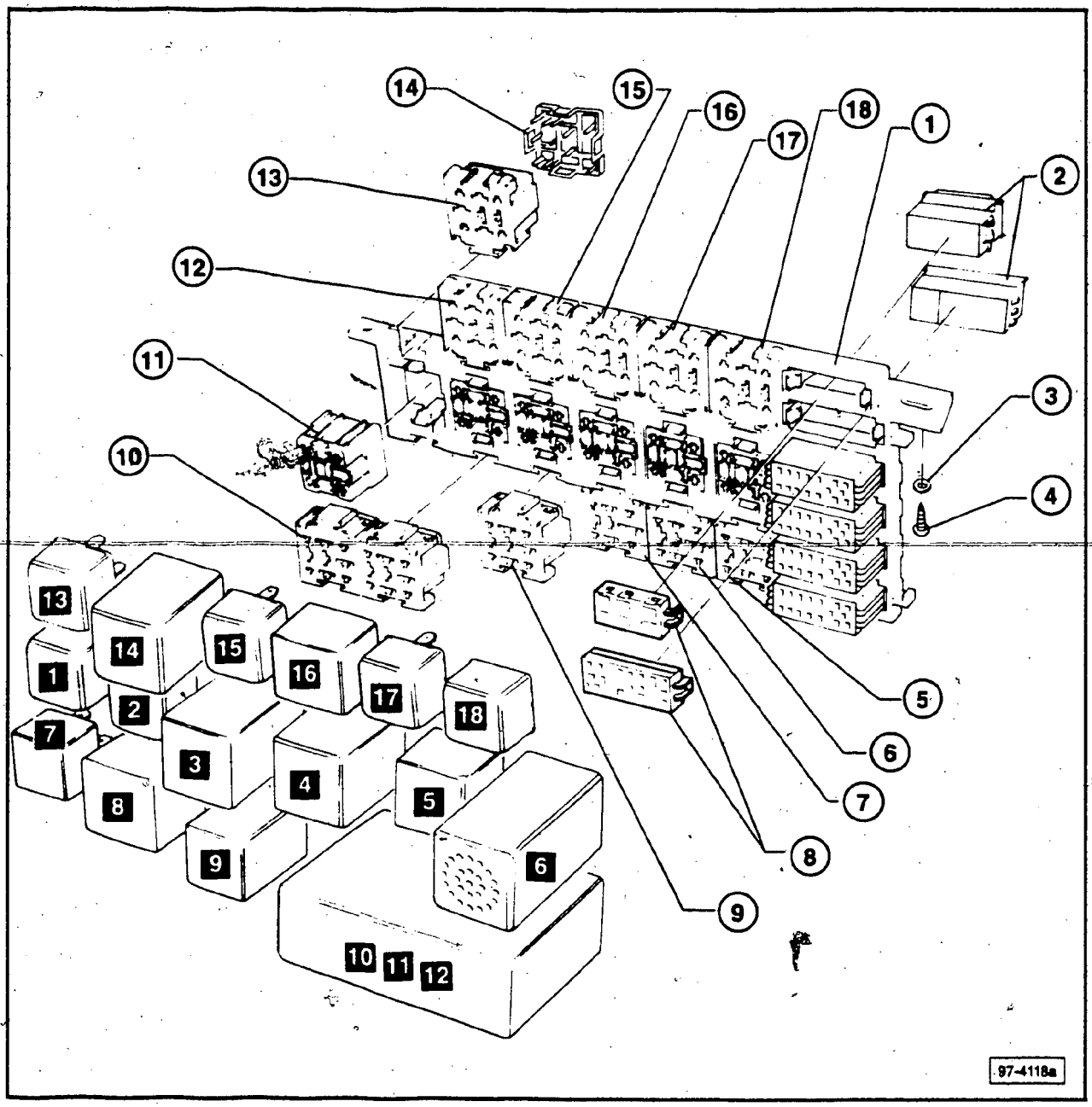

cardiagn.com

Note

To remove auxiliary relay panel — remove cover under left side of instrument panel, Fig. 1.

1. Auxiliary relay panel with wiring harness connector stations, removing Fig. 2
2. Connector housing sleeve
3. Washer
4. Sheetmetal screw
5. Relay socket (position **12**)
6. Relay socket (position **11**)
7. Relay socket (position **10**)
8. Terminal housing spread retaining tabs to move
9. Relay socket (position **9**)
10. Double relay socket (positions **7** and **8**)
11. Relay socket (position **1**)
12. Relay socket (position **14**)
13. Relay socket (position **13**)
14. Secondary retainer
15. Relay socket (position **15**)
16. Relay socket (position **16**)
17. Relay socket (position **17**)
18. Relay socket (position **18**)

Relay identification

1. ABS system, J156
2. Seat belt, radio, parking light warning, J152
3. Interior light control unit, J140
4. A/C clutch control unit, J153
5. not used
6. Dynamic oil pressure warning (without Auto-Check), J114
6. Lamp control unit, front (with Auto-Check), J123
7. not used
8. not used
9. not used
10. not used
11. not used
12. Circuit breaker (power seats with memory, power windows, power sunroof), S43
13. Seat heater control unit, passenger, J132
14. Seat heater control unit, driver, J131
15. Sunroof relay, J139 or
*15. Sunroof and power window control unit, J139
*16. Sunroof and power window control unit, J139
17. Wire distributor adaptor, (optional equipment connector)
18. not used

*Control unit occupies two positions

cardiagn.com

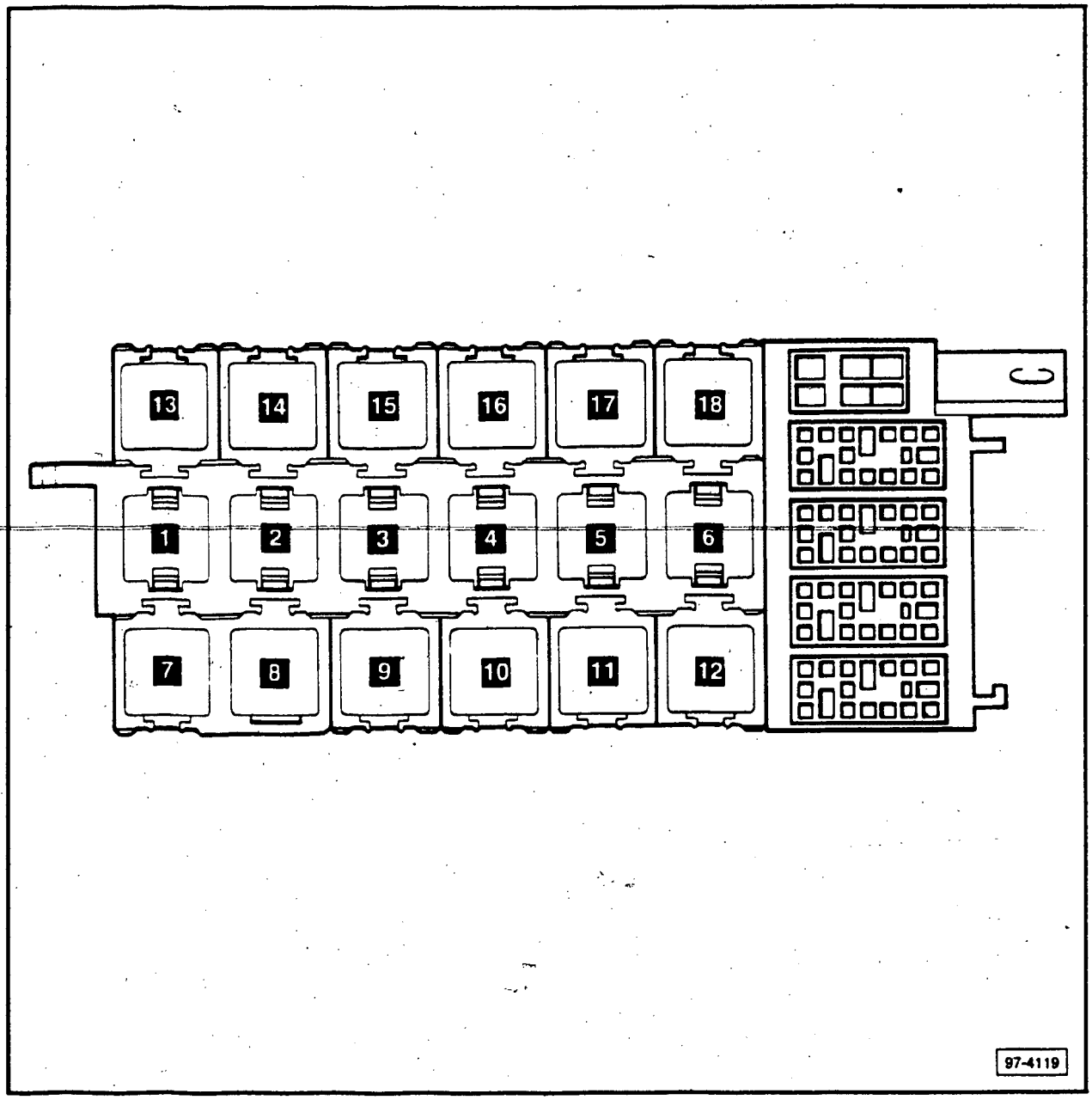

1 — ABS system, J156
2 — Seatbelt warning, J34
3 — Interior light control unit, J140
4 — A/C clutch relay, J32
5 — Rear window/wiper washer, J30 (Coupe)
6 — Oil pressure control unit (without Auto-Check), J114 or
7 — Lamp control unit, front (with Auto-Check), J123
8 — not used
9 — not used
10 — Auto-shiftlock (automatic only)
10 — not used
11 — not used
12 — Daytime driving light relay, J90 (Canada)
13 — Heated seat, passenger J132
14 — Heated seat, driver, J131
15 — Sunroof relay, J139 or
15 16 — Sunroof and power window control unit, J139
17 — Anti-theft alarm light warning relay, J237
18 — Power window, power sunroof, power seat circuit breaker, S43

cardiagn.com

CAUTION

Before starting work on any part of the electrical system disconnect battery ground strap.

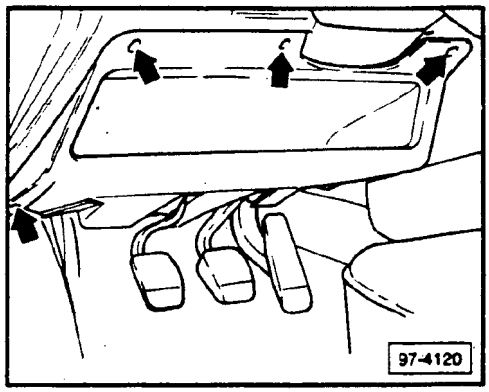

Fig. 1 Cover under left side of instrument panel, removing/installing

- remove screws (**arrows**)

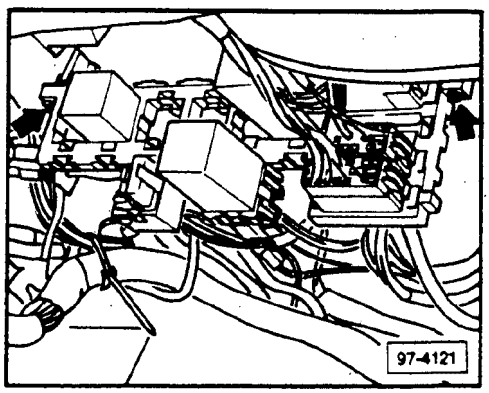

Fig. 2 Auxiliary relay panel with connector stations, removing/installing

- remove both sheetmetal screws (**arrows**)

cardiagn.com

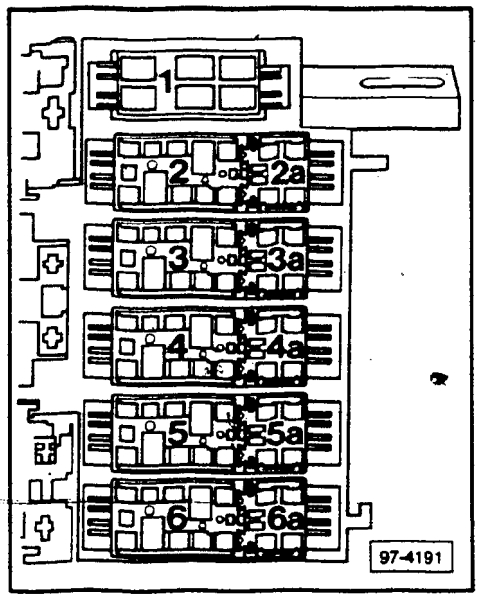

Identification of wiring harness connector positions on connector station

1 — Windshield wiper motor
color: black
2 — Automatic transmission
color: green
2a — A/C compressor
color: green
3 — Left front wiring harness
color: yellow
3a — Heated seats
color: yellow
4 — ABS system
4a — Cruise control
color: blue
5 — Rear wiring harness
color: brown
5a — Door contact switch
color: brown
6 — Right front wiring harness
color: black
6a — Right front wiring harness
color: black

Note

Wiring harness connectors for optional equipment will be installed on the connector station even if the vehicle does not have that option.

cardiagn.com

THIS FRAME INTENTIONALLY LEFT

BLANK

cardiagn.com

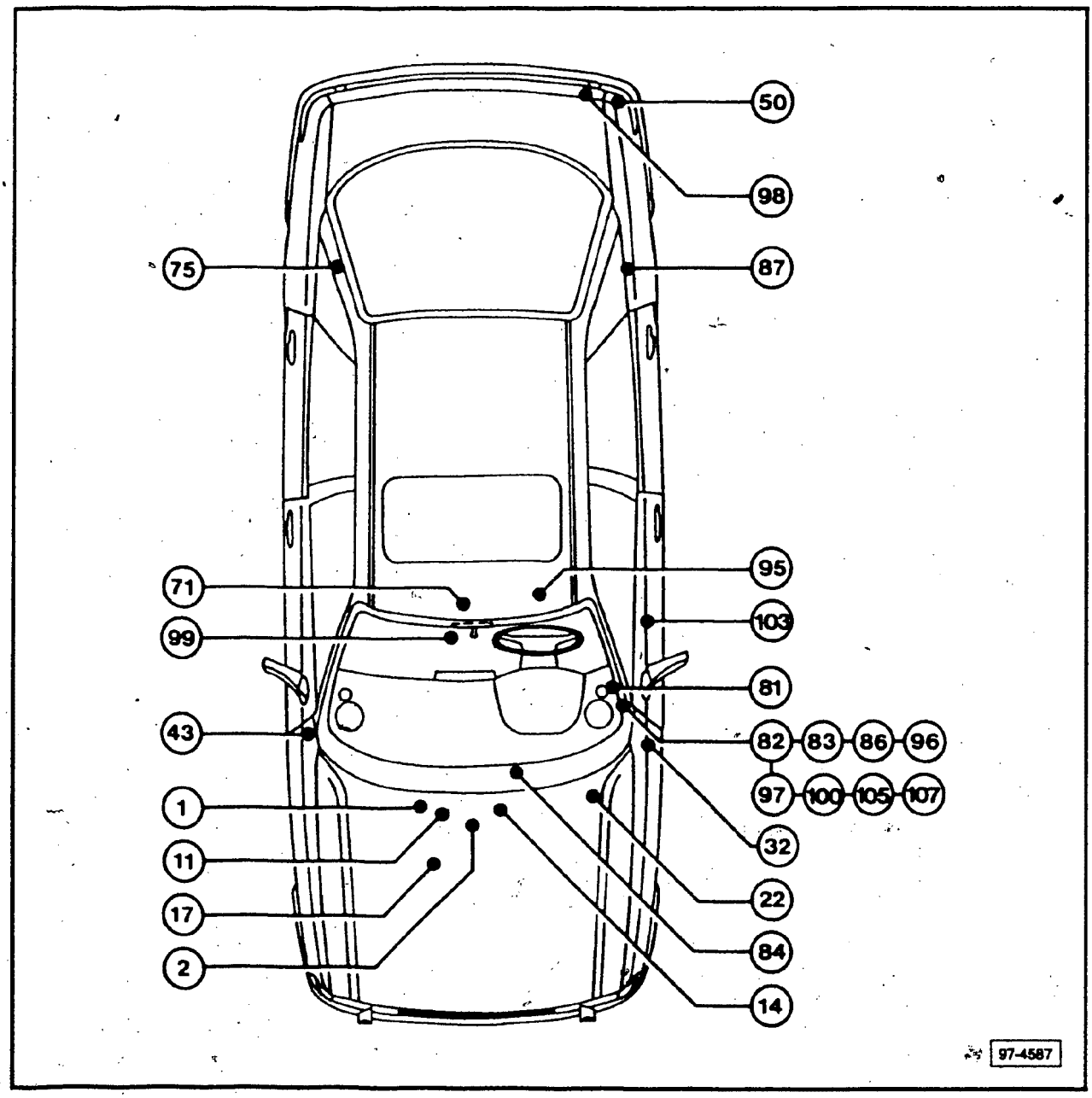

(1) **Ground strap, battery to body**
Fig. 1

(2) **Ground strap, body to trans.**
Fig. 2

(11) **Ground point, in battery box**
Fig. 1

(14) **Ground point, on transmission**
Fig. 2

(17) **Ground point, on intake manifold**
4-cylinder engine, Fig. 3
5-cylinder engine, Fig. 4

(22) **Ground point, near hydraulic unit,**
Fig. 5

(32) **Ground point, under instrument panel,**
left side, Fig. 6

(43) **Ground point, under right 'A' pillar,**
Fig. 11

(50) **Ground point, luggage compartment,**
left side, Fig. 27

(71) **Ground point, front roof bow,**
Fig. 20

(75) **Ground point, right rear 'C' pillar,**
Fig. 26

(81) **Welded ground connection,**
in instrument panel wiring harness, Fig. 7

cardiagn.com

(82) **Welded ground connection -1-,**
in left front wiring harness, Fig. 8

(83) **Welded ground connection,**
in right front wiring harness,
4-cylinder engine, Fig. 9
5-cylinder engine, Fig. 10

(84) **Welded ground connection,**
in right front wiring harness,
4-cylinder engine, Fig. 9
5-cylinder engine, Fig. 10

(86) **Welded ground connection -1-**
in rear wiring harness, Fig. 12

(87) **Welded ground connection -2-**
in rear wiring harness, Fig. 25

(95) **Welded ground connection,**
in power seat wiring harness, Fig. 24

(96) **Welded ground connection,**
in heated seat wiring harness, Fig. 23

(97) **Welded ground connection,**
in A/C wiring harness, Fig. 15

(98) **Welded ground connection,**
rear decklid wiring harness, Fig. 28

(99) **Welded ground connection,**
console wiring harness, Fig. 18

(100) **Welded ground connection,**
In ABS wiring harness, Fig. 16

(103) **Welded ground connection,**
in central locking system wiring harness, Fig. 22

(105) **Welded ground connection,**
in central locking wiring harness, Fig. 19

(107) **Welded ground connection,**
in outside mirror wiring harness, Fig. 13

cardiagn.com

CONTINUED IN THE

BEGINNING OF NEXT ROW

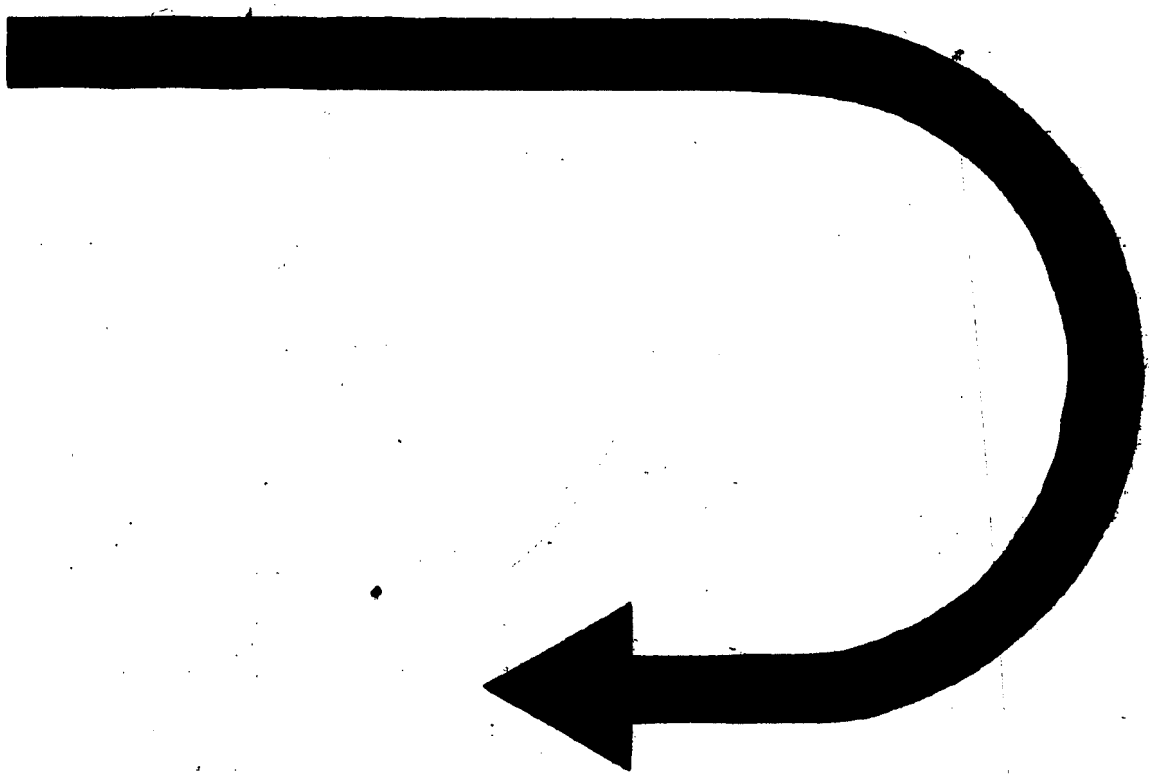

cardiagn.com

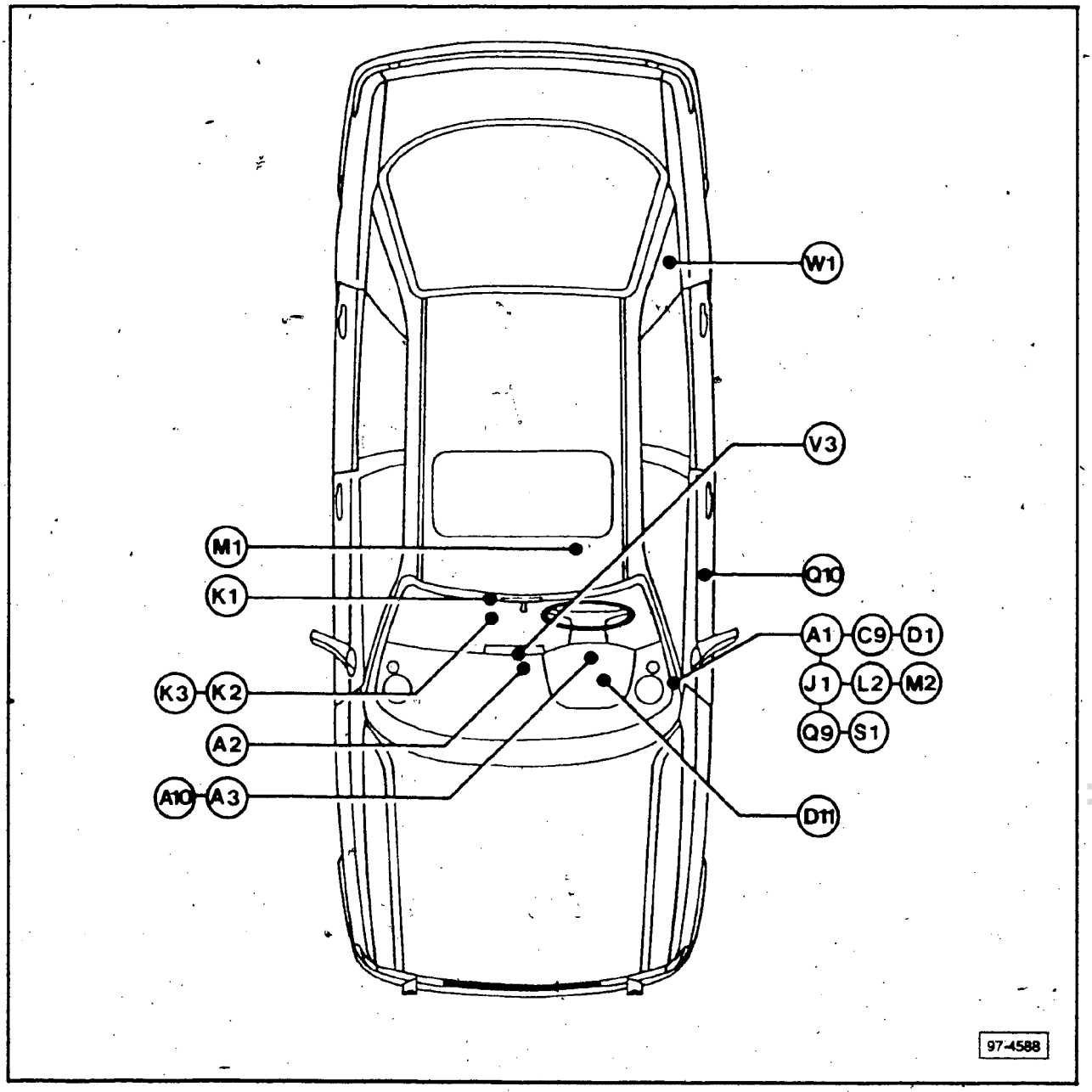

(A1) **Welded plus (+) connection,**
in instrument panel wiring harness, Fig. 7

(A2) **Welded plus (+) connection (15),**
in instrument panel wiring harness, Fig. 7

(A3) **Welded plus (+) connection (58),**
in instrument panel wiring harness, Fig. 7

(A10) **In instrument panel wiring harness, not for USA production**

(C9) **Welded plus (+) connection (75a),**
in left front wiring harness, Fig. 8

(D1) **Welded plus (+) connection (15a),**
in right front wiring harness,
4 cylinder engine, Fig. 9
5 cylinder engine, Fig. 10

(D11) **Welded plus (+) connection (15),**
over fuse S28 in right front wiring harness,
4 cylinder engine, Fig. 9
5 cylinder engine, Fig. 10

(J1) **Welded plus (+) connection (30)**
in ABS wiring harness, Fig. 16

(K1) **Welded plus (+) connection (58),**
in console wiring harness, Fig. 18

cardiagn.com

(K2) **Welded plus (+) connection (15a),**
in console wiring harness, Fig. 18

(K3) **Welded plus (+) connection (58a),**
in console wiring harness, Fig. 18

(L2) Connected in A/C compressor wiring harness, Fig. 14

(M1) **Welded plus (+) connection -1- (30)**
in power seat wiring harness, Fig. 24

(M2) **Welded plus (+) connection -2- (30)**
in power seat wiring harness, Fig. 23

(Q9) Connected in power window wiring harness, Fig. 21

(Q10) **Welded plus (+) connection (87)**
in power window, central lock, door contact wiring harness, Fig. 22

(S1) **Welded plus (+) connection (30)**
in central lock system wiring harness, Fig. 19

(V3) **Connected to NF (–)**
in rear speaker wiring harness, Fig. 17

(W1) **Welded plus (+) connection (54),**
in rear wiring harness, Fig. 25

cardiagn.com

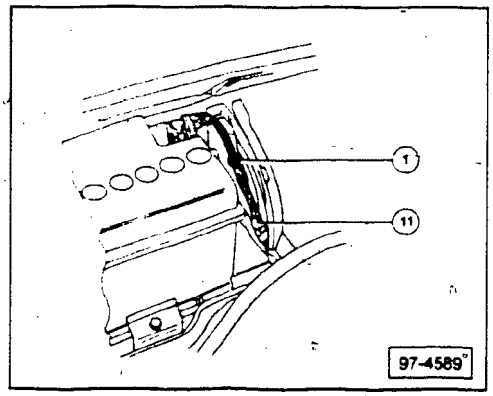

▶ **Fig. 1 Ground strap**

battery to body

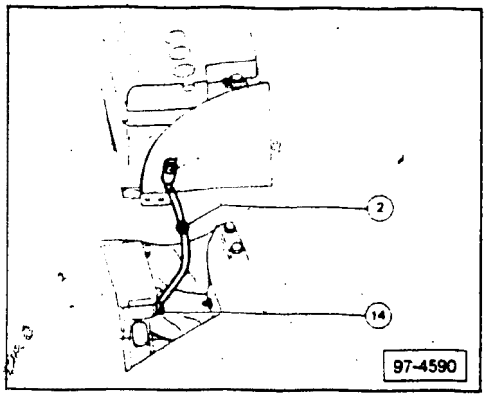

▶ **Fig. 2 Ground strap**

body to transmission

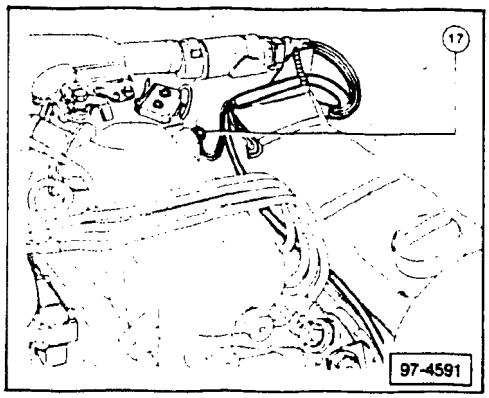

▶ **Fig. 3 Ground point**

on intake manifold
(4-cylinder engine)

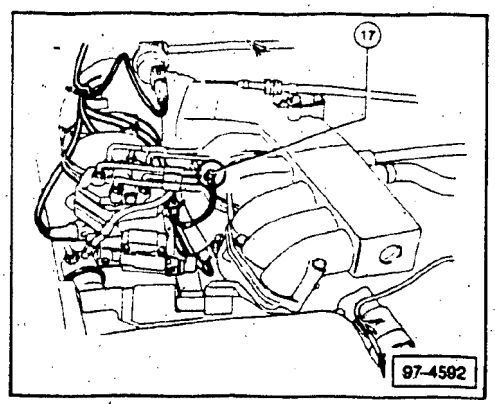

▶ **Fig. 4 Ground point**

on intake manifold
(5-cylinder engine)

cardiagn.com

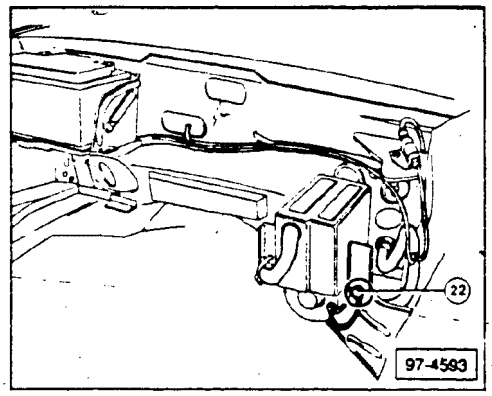

▶ **Fig. 5 Ground point**

near hydraulic unit

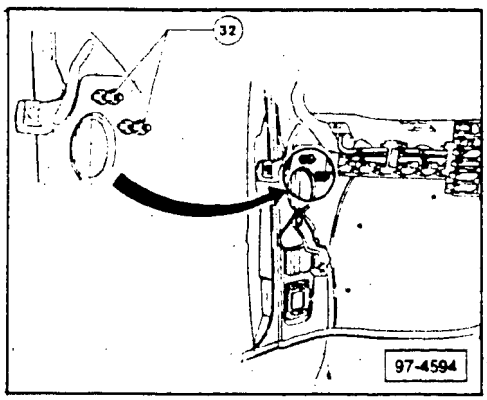

▶ **Fig. 6 Ground point**

under instrument panel

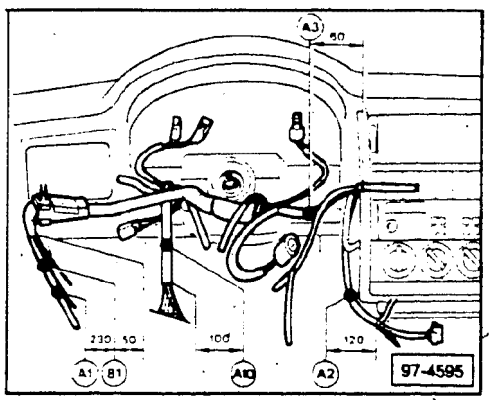

▶ **Fig. 7 Welded plus (+) connections**

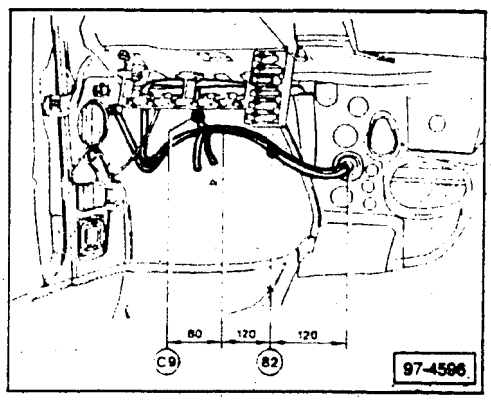

▶ **Fig. 8 Welded plus (+) connections**

cardiagn.com

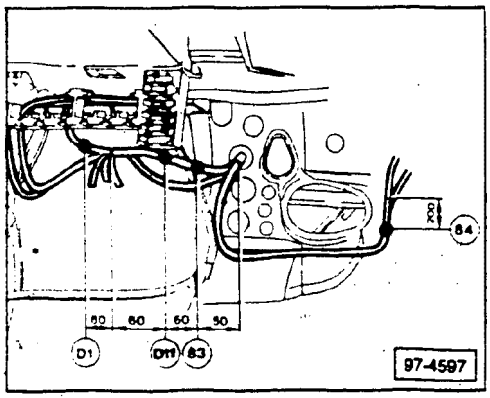

▶ **Fig. 9 Welded plus (+) connections**

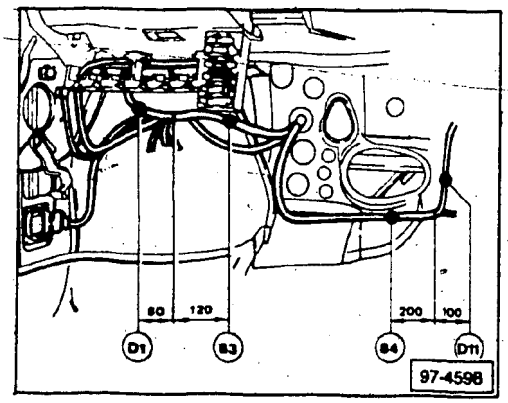

▶ **Fig. 10 Welded plus (+) connections**

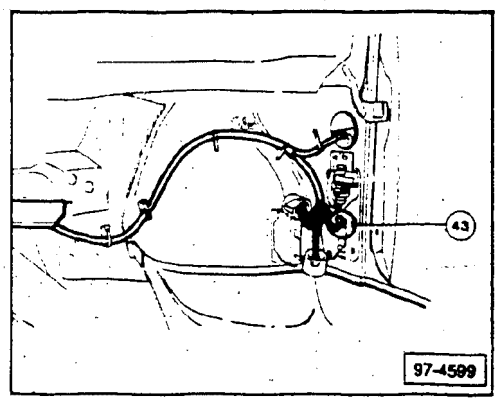

▶ **Fig. 11 Ground point**

bottom of right '**A**' pillar

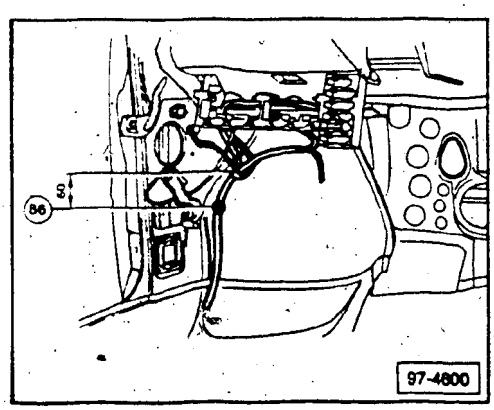

▶ **Fig. 12 Welded ground connection**

under instrument panel

cardiagn.com

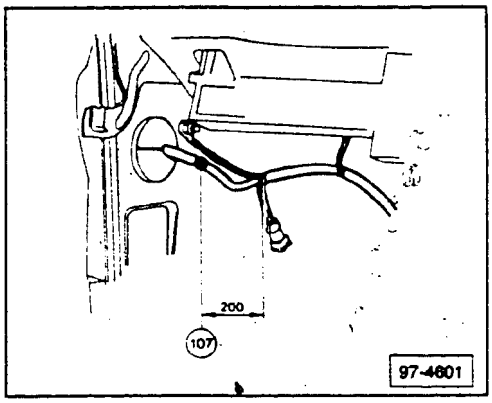

▶ **Fig. 13 Welded ground connection**

in power mirror wiring harness

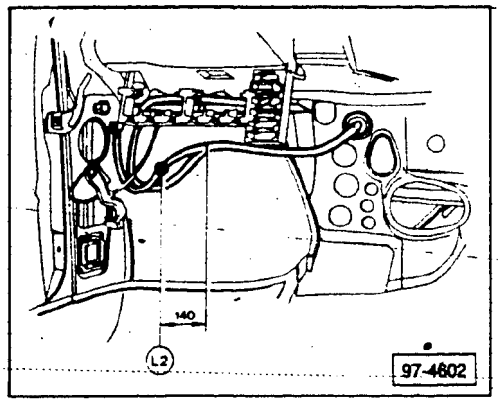

▶ **Fig. 14 Welded plus (+) connection**

A/C compressor wiring harness

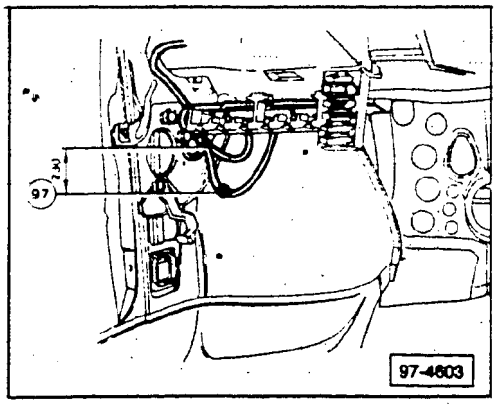

▶ **Fig. 15 Welded ground connection**

in A/C wiring harness

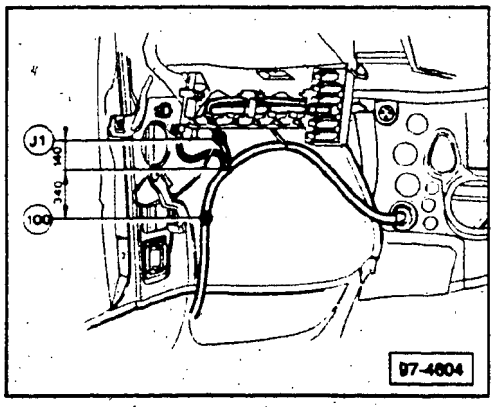

▶ **Fig. 16 Welded plus (+) connection and welded ground connection**

cardiagn.com

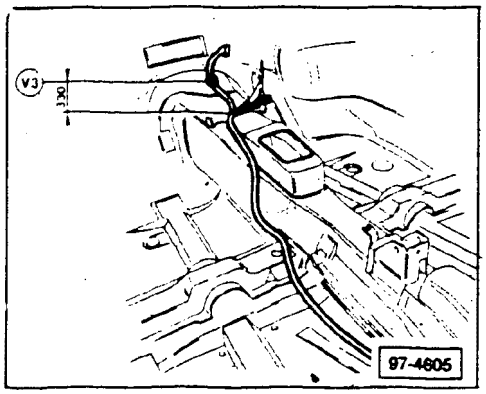

Fig. 17 Welded plus (+) connection

in rear speaker harness

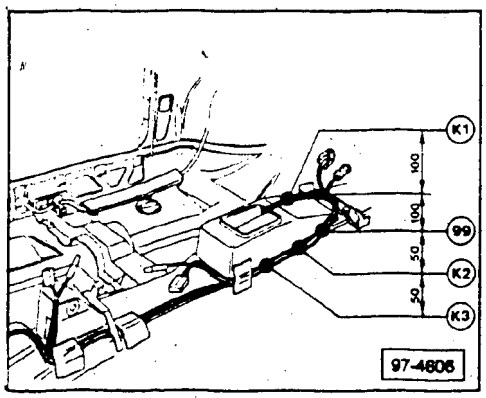

Fig. 18 Welded plus (+) connections

in center console harness

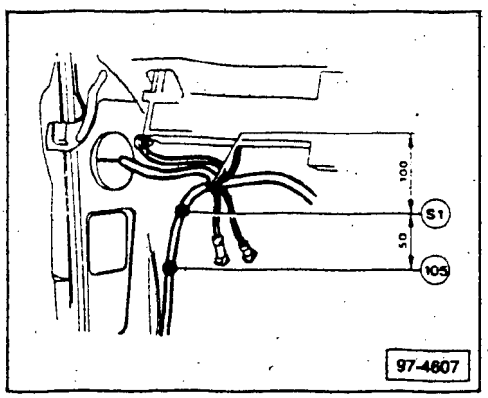

Fig. 19 Welded plus (+) connection,
welded ground connection

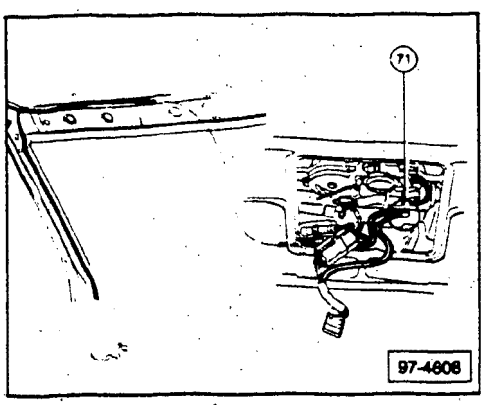

Fig. 20 Ground point

on front roof bow near sunroof motor

cardiagn.com

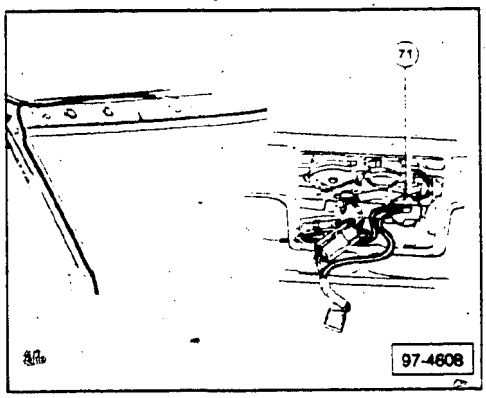

▶ **Fig. 21 Welded plus (+) connection**

in power window wiring harness

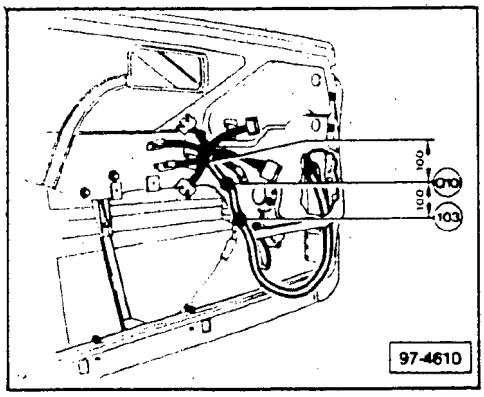

▶ **Fig. 22 Welded plus (+) connection, Welded ground connection**

in power window wiring harness

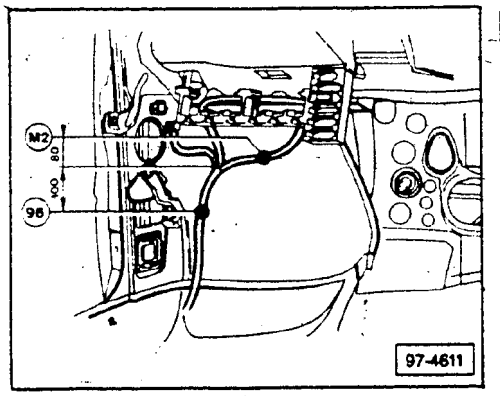

▶ **Fig. 23 Welded plus (+) connection, Welded ground connection**

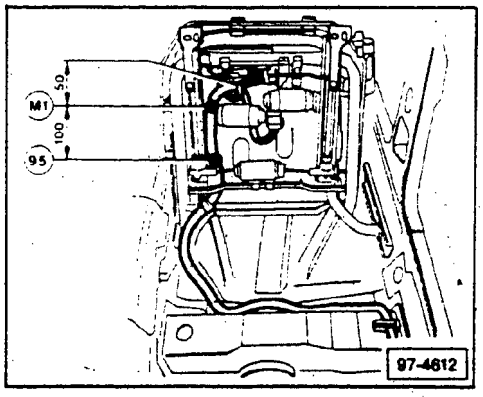

▶ **Fig. 24 Welded plus (+) connection, Welded ground connection**

in power seat wiring harness

cardiagn.com

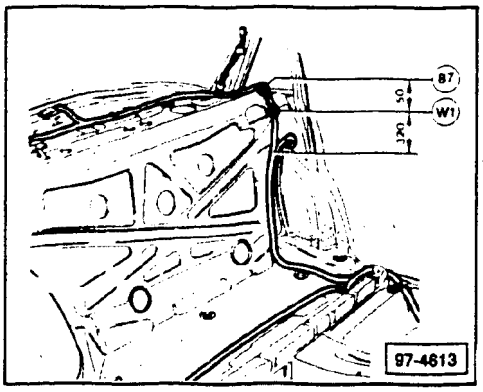

▶ **Fig. 25 Welded plus (+) connection**
Welded ground connection

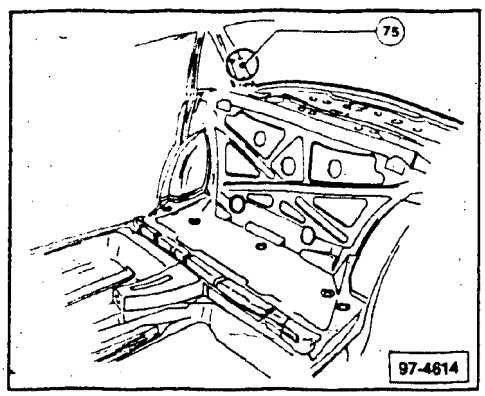

▶ **Fig. 26 Ground point**

right '**C**' pillar

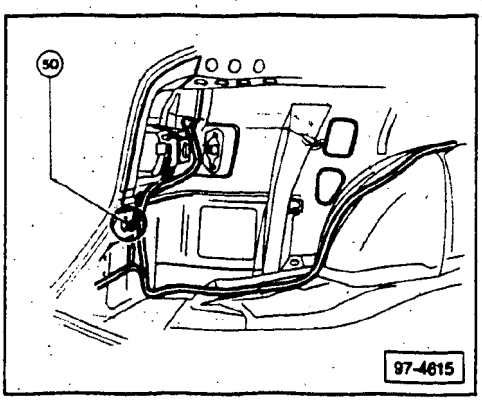

▶ **Fig. 27 Ground point**

luggage compartment, left side

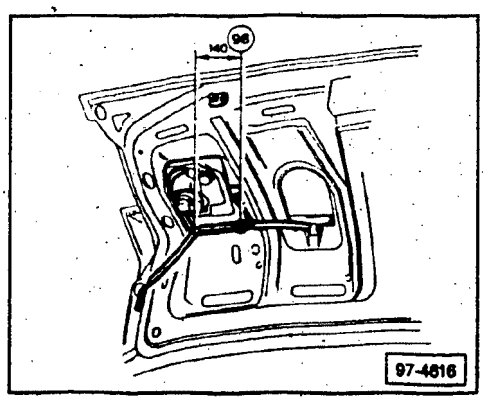

▶ **Fig. 28 Welded ground connection**

in decklid wiring harness

cardiagn.com

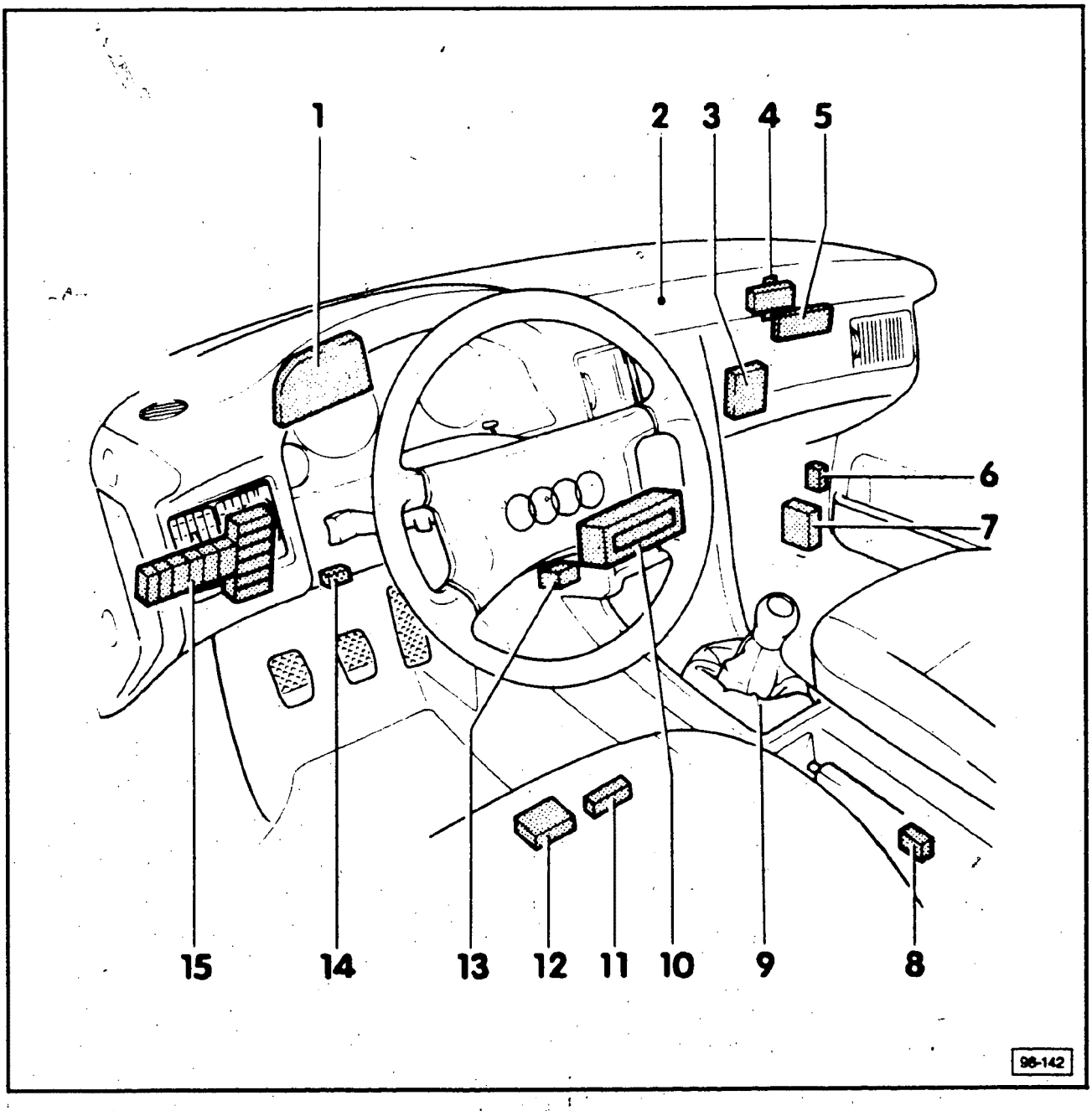

1 — Board computer/Auto-check system, J128/J189

2 — Interior temperature sensor, G56

3 — CIS-E control unit, J21 (5 cylinder) or
Multi-point injection control unit, J192 (20 V) or
CIS Motronic control unit, J204 (4 cylinder)

4 — Control unit for cruise control, E46

5 — A/C programmer, J127

6 — Altitude sensor, F96
only with CIS-E III

7 — Ignition control unit, J154
5 cylinder only

8 — Automatic shiftlock warning buzzer, H9
automatic only

9 — Automatic shiftlock solenoid, N110
automatic only

10 — A/C control head, E87

11 — Power supply relay (memory seat), J137

12 — Memory seat control unit, J136

13 — Instrument panel light booster, J166
only with auxiliary instruments

14 — Emergency flasher/turn signal relay, J2

15 — Auxiliary relay panel

cardiagn.com

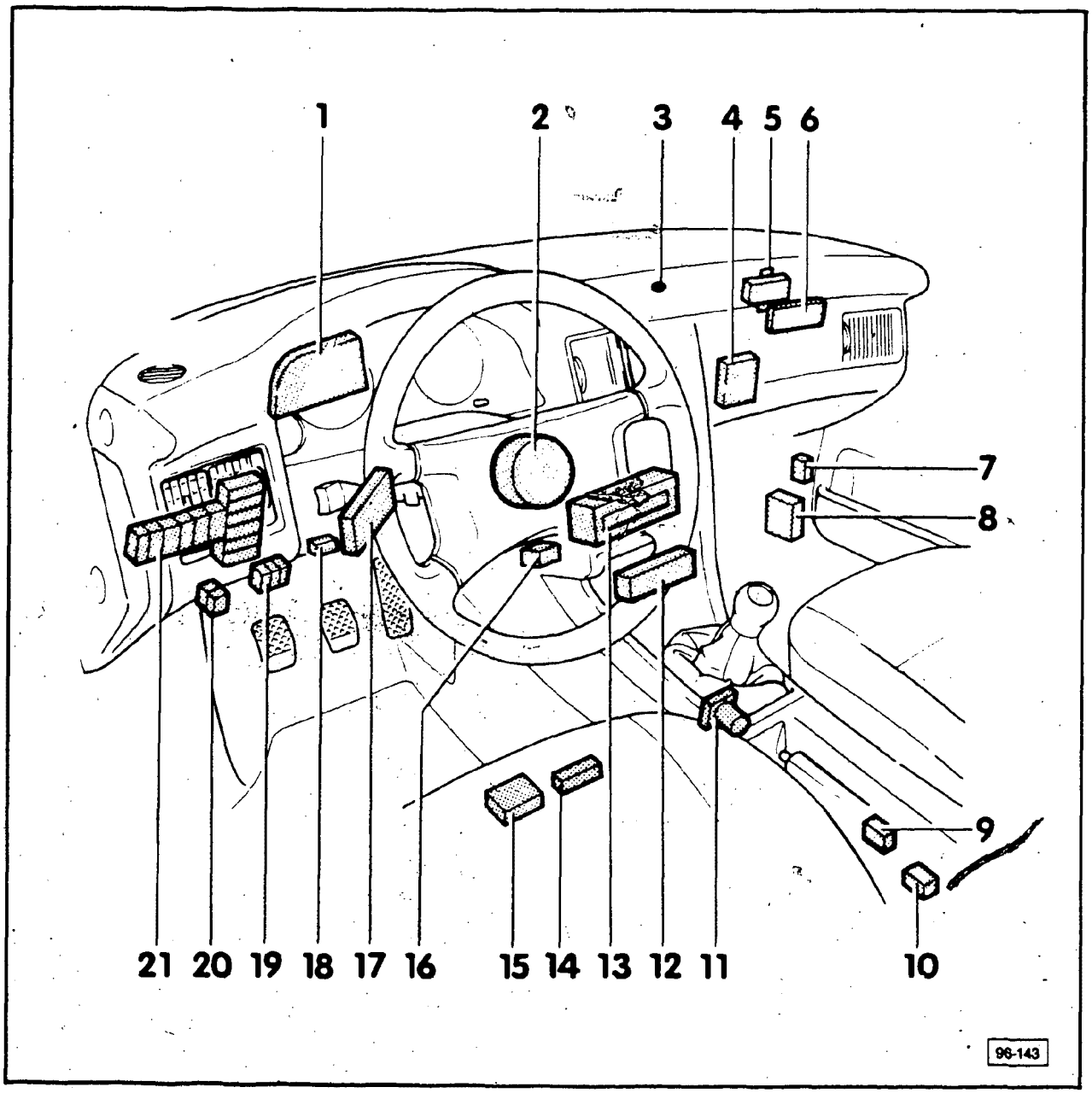

1 — Board computer/Auto-check system, J128/J189

2 — Airbag igniter, N95

3 — Interior temperature sensor, G56

4 — CIS-E control unit, J21 (5 cylinder) or
Multi-point injection control unit, J192 (20 V) or
CIS Motronic control unit, J204 (4 cylinder)

5 — Control unit for cruise control, E46

6 — A/C programmer, J127

7 — Altitude sensor, F96
only with CIS-E III

8 — Ignition control unit, J154
5 cylinder only

9 — Automatic shiftlock warning buzzer, H9
automatic only

10 — Parking brake warning light switch, F9

11 — Automatic shiftlock solenoid, N110
automatic only

12 — Airbag triggering unit, J178

13 — A/C control head, E87

14 — Power supply relay (memory seat), J137

15 — Memory seat control unit, J136

16 — Instrument panel light booster, J166
only with auxiliary instruments

cardiagn.com

17 — Automatic transmission control unit, J217
4-speed

18 — Emergency flasher/turn signal relay, J2

19 — Diagnostic connectors

20 — Fog light connector

21 — Auxiliary relay panel

cardiagn.com

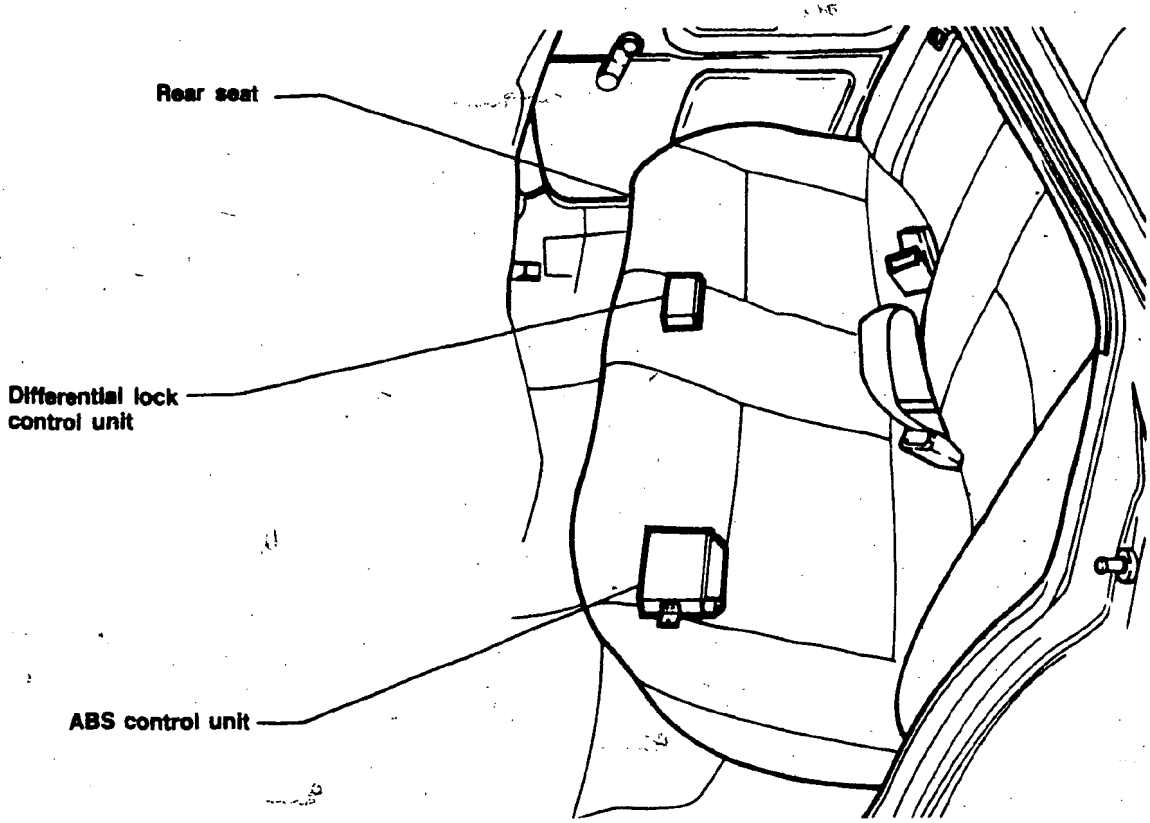

cardiagn.com

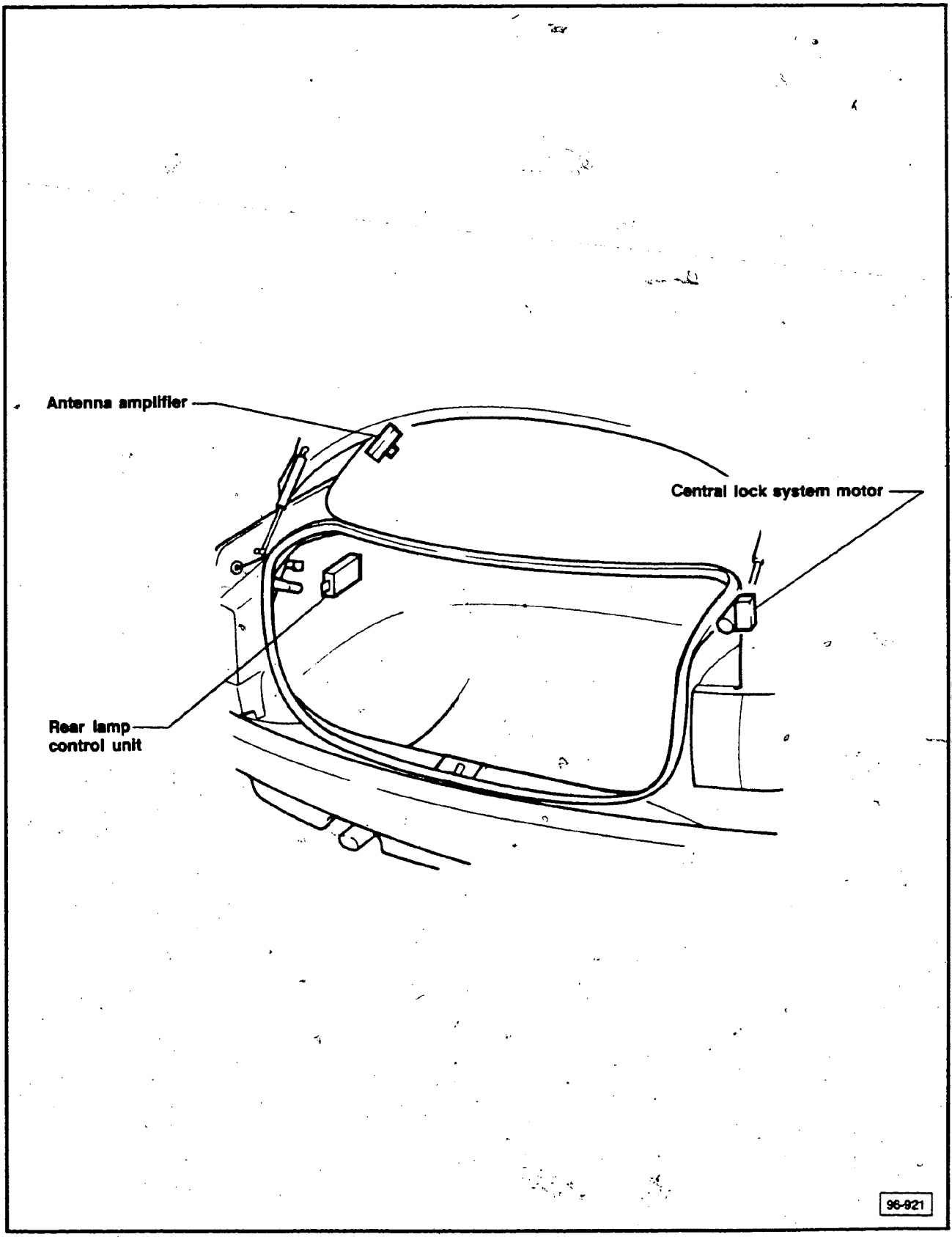

cardiagn.com

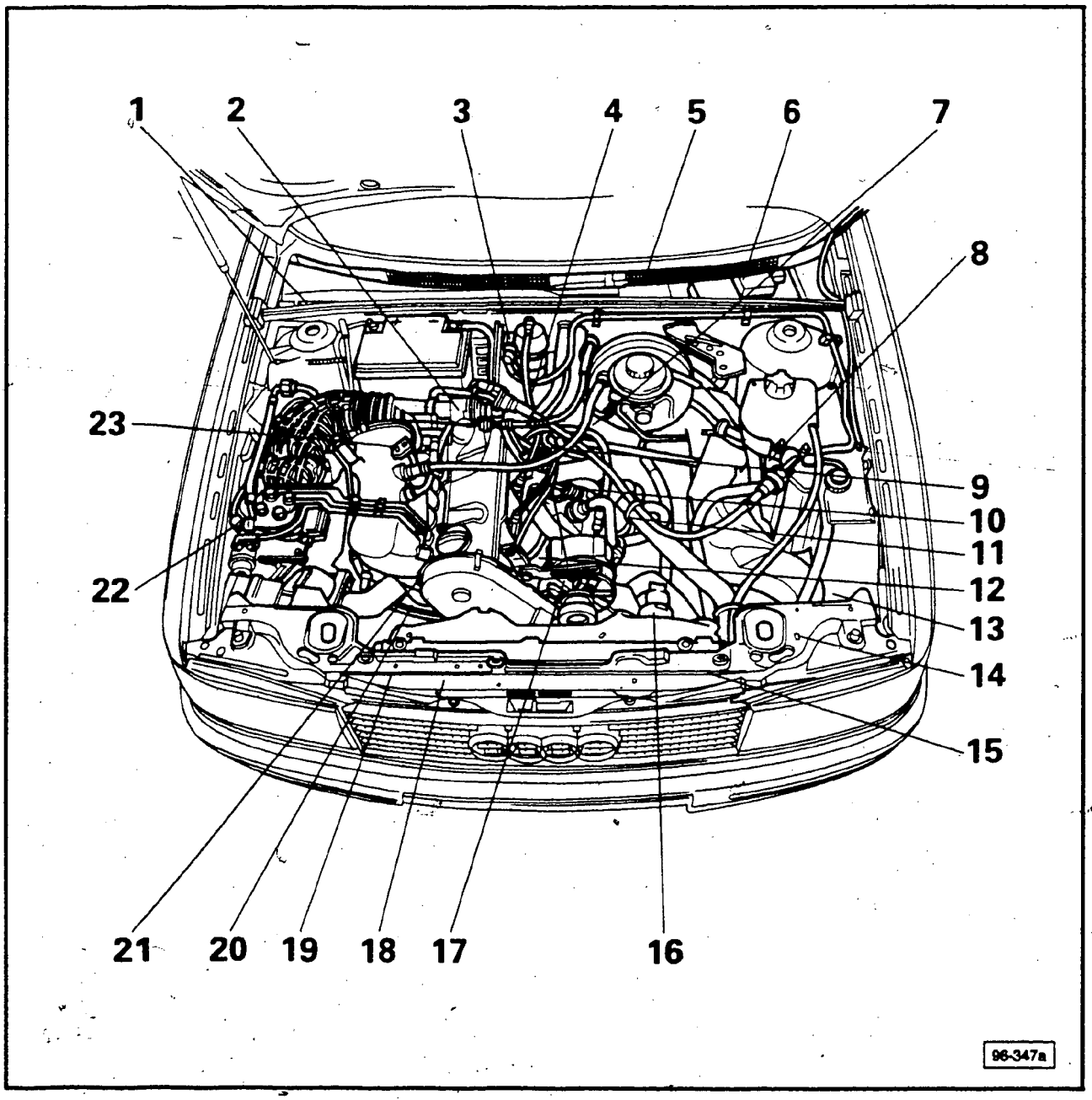

1 — Ambient (outside) temperature switch, F38 (manual A/C) or Ambient (outside) temperature sensor, G57 (digital A/C)

2 — Idle stabilizer valve, N71

3 — Ignition coil power stage, N70

4 — Oxygen sensor/Oxygen sensor heater, G39/Z19

5 — Windshield wiper motor, V

6 — Fuse/relay panel

7 — Speedometer sender unit, G22

8 — Coolant low level warning switch, F66

9 — Ignition distributor/ Hall sender, O/G40

10 — Engine oil temperature sensor, G8

11 — Engine oil pressure switch (1.8 bar), F1

— Engine oil pressure switch (0.3 bar), F22

12 — Knock sensor, G61

13 — Windshield washer fluid level warning switch, F77

14 — Hood switch (anti-theft alarm system), F120

15 — Radiator cooling fan thermoswitch (with A/C), F18/F54

16 — Radiator cooling fan, V7

17 — Alternator, C

cardiagn.com

18 — A/C compressor clutch/ Protective diode, N25/J201

19 — Radiator cooling fan thermoswitch, F18/F54

20 — Starter, B

21 — Radiator cooling fan after-run thermoswitch, F87

22 — Air flow sensor potentiometer, G19

23 — Full throttle switch, F81

cardiagn.com

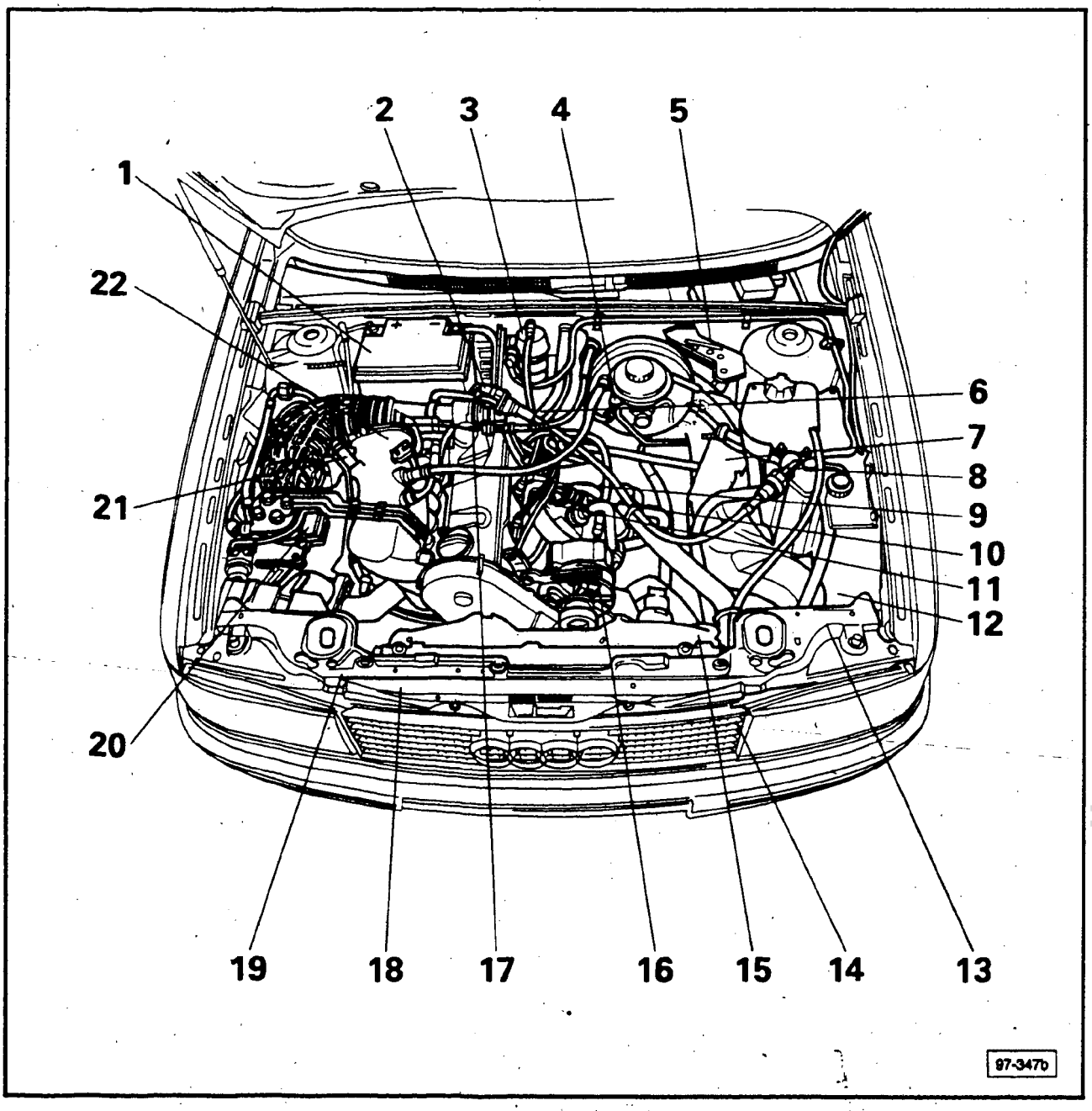

1 — Battery, A

2 — Carbon canister cut-off valve, N115

3 — Ignition coil, N

4 — Brake fluid level warning switch, F34

5 — Vacuum control motor, V18

6 — Back-up light switch, F4

7 — ABS hydraulic unit, N55 (with ABS only)

8 — Carbon canister solenoid valve, N80

9 — Coolant temperature sensor/ Coolant temperature warning switch, G2/F14

10 — Engine oil pressure sensor, G10

11 — Coolant temperature sensor, G18/G62

12 — Windshield washer pump, V5

13 — Horn, H1

14 — Outside air temperature sensor, G17

15 — Radiator cooling fan series resistance, N39

16 — Voltage regulator, C1

17 — A/C kickdown switch (auto. trans), F46

18 — A/C high pressure switch, F23

cardiagn.com

19 — A/C high pressure cut-out switch, F118

20 — Differential pressure regulator, N73

21 — Cold start valve, N17

22 — Idle switch, F60

cardiagn.com

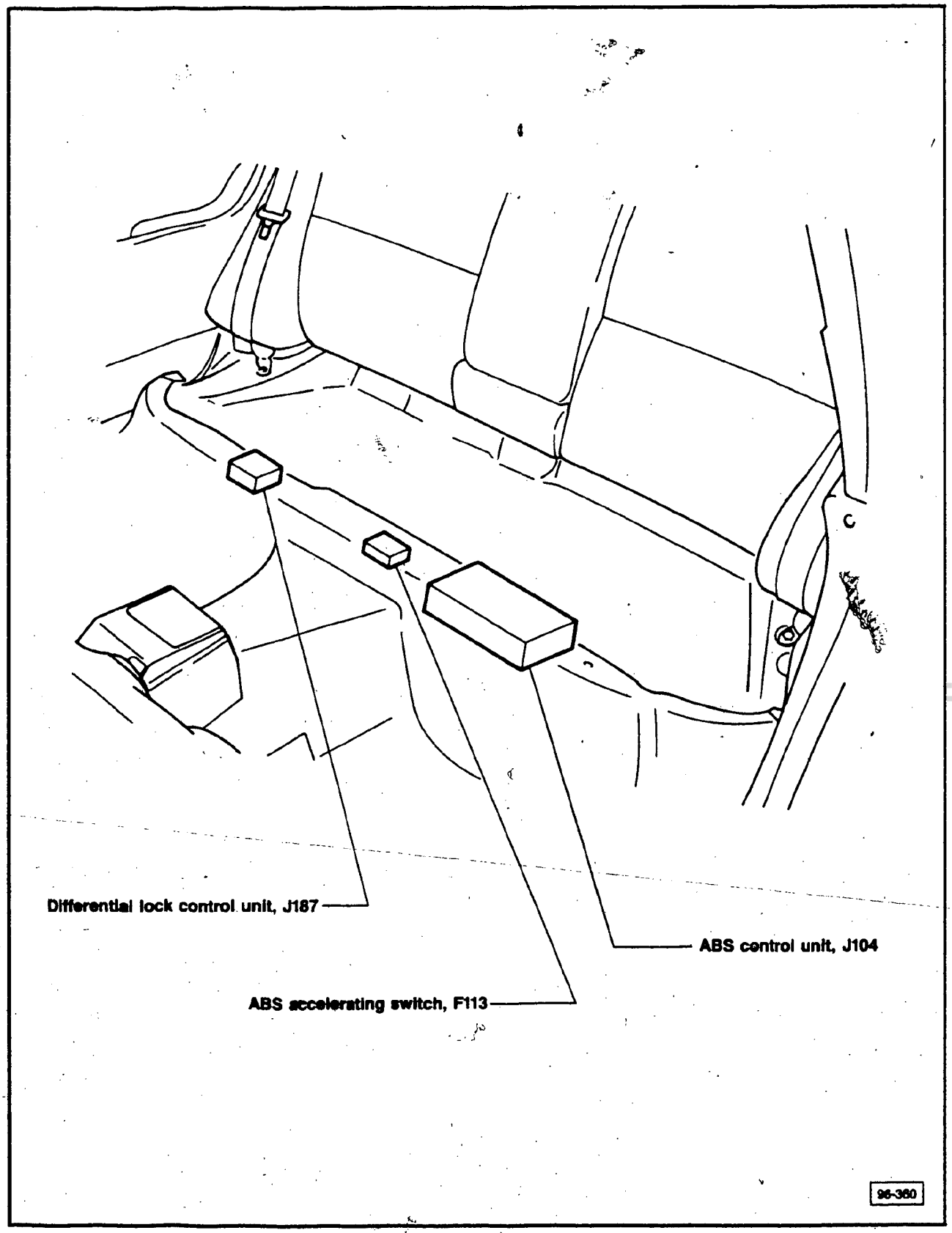

cardiagn.com

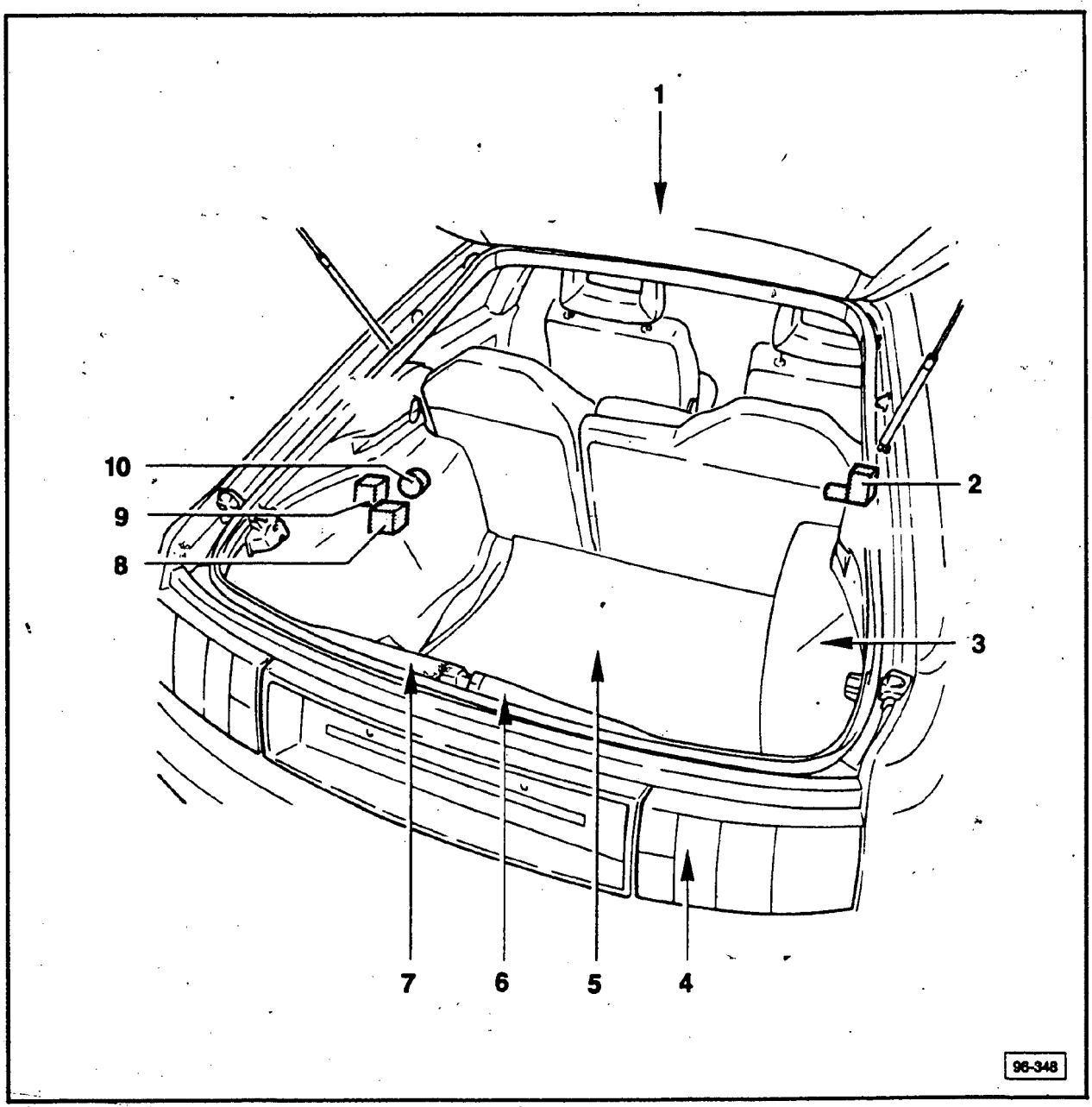

1 — Electrically amplified antenna (on roof), V44

2 — Central lock system motor, V37

3 — Rear window washer pump, V13

4 — Anti-theft alarm switch, trunk lock cylinder, F124 (US only)

5 — Fuel tank sender/electric fuel pump, G/G6

6 — Anti-theft alarm switch, trunk, F123 (US only)

7 — Luggage compartment light switch, F5

8 — Rear lamp control unit, J124

9 — Anti-theft alarm control unit, J85 (US only)

10 — Anti-theft alarm horn, H8 (US only)

cardiagn.com

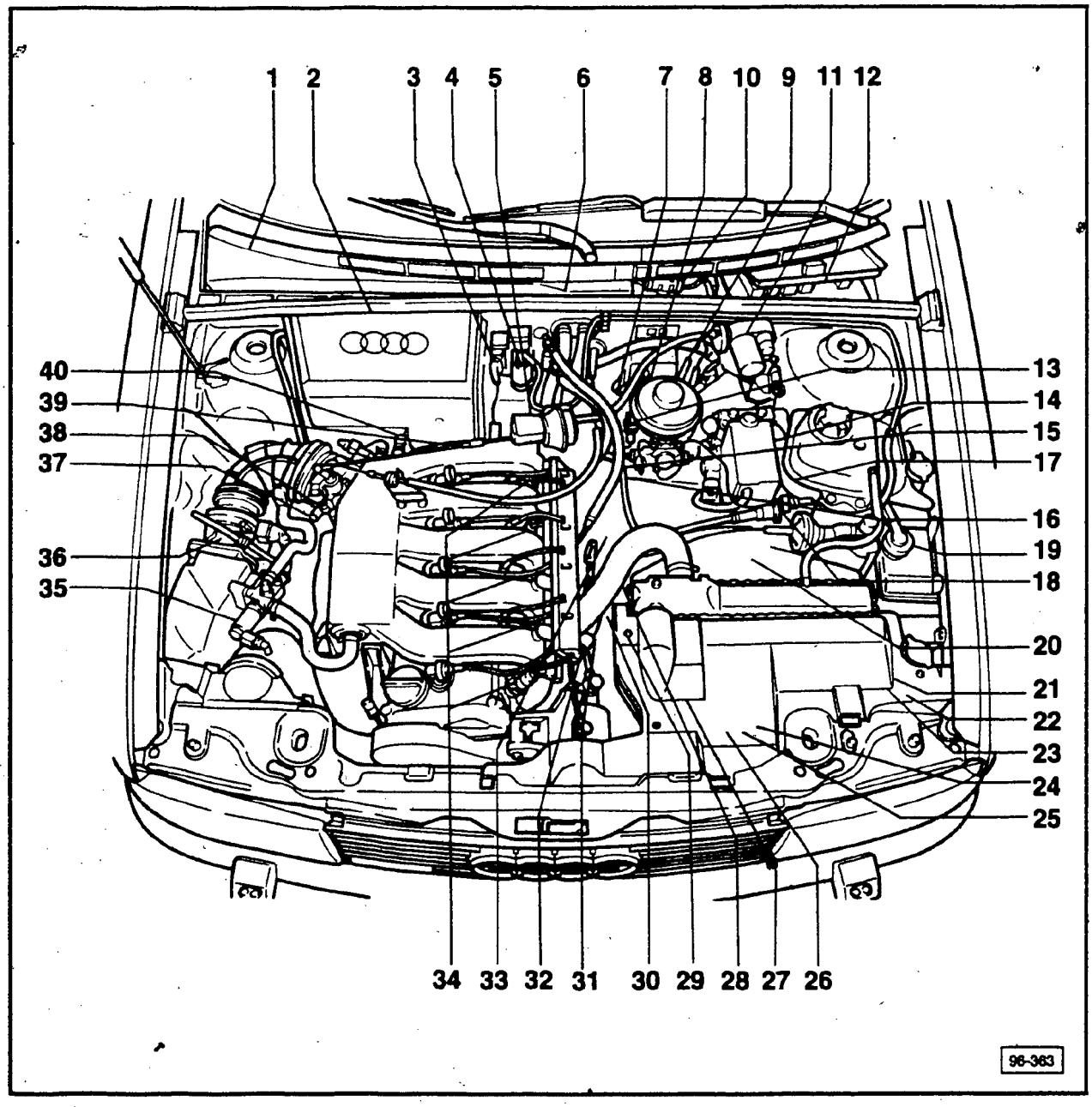

1 — Outside temperature sensor
2 — Battery
3 — Power output stage
4 — Ignition coil
5 — Distributor/Hall sender
6 — Windshield washer motor
7 — Brake pressure warning switch
8 — Back-up light switch
9 — Speed sensor (speedometer)
10 — Injector series resistance
11 — Vacuum control motor (cruise control)
12 — Fuse/relay panel
13 — Brake fluid level warning switch
14 — ABS hydraulic control unit
15 — Ignition timing sender
16 — Engine speed sensor
17 — Coolant low level warning switch
18 — Carbon canister frequency valve
19 — Hydraulic fluid level warning switch
20 — Radiator cooling fan
21 — Washer fluid level switch
22 — Washer pump

cardiagn.com

23 — Horn
24 — A/C compressor clutch high pressure cut-out switch
25 — A/C high pressure switch (fan)
26 — Alternator/voltage regulator
27 — Radiator cooling fan thermoswitch
28 — Knock sensor I
29 — Oil pressure switch, brown (0.3 bar)
30 — Oil pressure switch, white (1.8 bar)
31 — Coolant temperature sensor
32 — Electronic thermoswitch
33 — Knock sensor II
34 — Injectors (1 through 5)
35 — Idle stabilizer valve
36 — Air mass sensor
37 — Throttle switch
38 — Throttle potentiometer
39 — Radiator cooling fan after run thermoswitch
40 — Oxygen sensor with heater

cardiagn.com

Index

index continues on next page

A/C compressor
- removing/installing, (4-cylinder) 87.16
- removing/installing, (5-cylinder) 87.17
- V-belt 87.12

A/C compressor clutch
- air gap 87.18
- assembly 87.18
- removing/installing 87.19

A/C control head
- removing/installing 87.49

A/C programmer
- removing/installing 87.48

A/C refrigerant system
- 4-cylinder 87.8
- 5-cylinder 87.9
- ★ cautions/warnings 87.2
- components 87.6
- components, repairing/replacing 87.3
- ★ discharging 87.4
- lines 87.14
- O-rings 87.15
- pressure switches 87.10
- troubleshooting 87.40

Adjustment motor for temperature control flap (w/feedback potentiometer)
- removing/installing 87.46

Air conditioner
- controls 87.20
- refrigerant low pressure switch, checking 87.38
- system, checking 87.36

Bowden cable
- connections 87.28
- identification 87.27

Climate control system
- component layout 87.43
- repairing 87.45

Feedback potentiometer
- adjusting 87.46

Footwell air outlet
- removing/installing 87.29

Fresh air blower
- impeller, checking 87.27
- motor control unit, removing/installing 87.45
- removing/installing 87.27
- series resistance removing/installing 87.23

Fresh air intake duct mesh
- installing 87.29

Fresh air recirculation door
- checking 87.22
- two way valve, removing 87.25
- vacuum servo, checking 87.24

Heater core
- assembly 87.32
- sealing 87.33

Heater/evaporator housing
- assembly/disassembly 87.34
- removing/installing 87.30

Instrument panel temperature sensor
- blower, removing/installing 87.48
- removing/installing 87.48

Instrument panel air outlets
- removing/installing 87.24

Outside temperature sensor
- removing/checking 87.23

★ <u>NEW INFORMATION</u> since last filming

aacdiagram.com

Index

Restrictor
- removing/installing 87.14

Temperature sensor (roof)
- removing/installing 87.46

Vacuum hoses
- connecting 87.50

Vacuum servo
- removing/installing 87.35

Vacuum system
- checking 87.13
- components 87.26

Vacuum unit and coolant check valve
- removing/installing 87.45

Vacuum unit for central flap
- adjusting (instrument panel installed) 87.47
- adjusting (instrument panel removed) 87.47
- removing/installing 87.47

Vacuum unit for footwell/defrost flap
- removing/installing 87.49

Water drain valve
- installing 87.12

carkjiapo.com

Cautions and warnings

WARNING

- A/C system is filled with R12 refrigerant gas which is under pressure
- always be careful that refrigerant does not come in contact with your skin
- always wear eye protection when working around the system
- if liquid refrigerant has come in contact with your skin or eyes:
  - do not rub skin or eyes
  - immediately flush with cool water
  - rush to a doctor or hospital
  - do not attempt to treat yourself
- keep refrigerant containers stored below 50°C (122°F) and never drop from high places
- keep refrigerant away from open flames because poisonous gas will be produced if it burns
- electric welding near refrigerant hoses causes refrigerant to decompose from ultraviolet light. Discharge system before electric welding, see A/C refrigerant system discharging procedure
- do not steam clean condensers or evaporators. Use only cold water or compressed air
- automotive refrigerant containing CFC's is hazardous to the earth's atmosphere. To protect our environment, use an Underwriter's Laboratory (UL) approved refrigerant recovery/recycling unit such as **Kent-Moore ACR³**, or equivalent, whenever discharging an A/C system

CAUTION

Refrigerant system has no sight glass. System must not be topped up.

If low refrigerant charge is suspected, system must be completely discharged, evacuated and recharged with 1050 g + 20 g (37.0 oz + 0.7 oz) of R12 refrigerant.

Refrigerant system components, repairing/replacing

WARNING

Automotive refrigerant containing CFC's is hazardous to the earth's atmosphere. To protect our environment, use an Underwriter's Laboratory (UL) approved refrigerant recovery/recycling unit such as **Kent-Moore ACR³**, or equivalent, whenever discharging an A/C system.

- discharge refrigerant system, see A/C refrigerant system discharging procedure
- remove defective component

Note

Replacement A/C compressors, evaporators and condensers are filled with R12 refrigerant during manufacture. If no gas escapes when these parts are first opened, the component is possibly defective.

- add refrigerant oil to new component

Add the following amount of refrigerant oil when replacing these components:

evaporator	20cc (1.0 oz)
condenser	10cc (0.5 oz)
refrigerant line	10cc (0.5 oz)
refrigerant hose	10cc (0.5 oz)

- replace A/C restrictor
- evacuate and recharge A/C refrigerant system

Use A/C refrigerant oil that meets the specifications of the following oils:

Shell	Clavus G100
Sunoil	Suniso 5 GS
Texaco (DEA)	Triton WF 100
Idemitsu	Nippondenso Oil 6 G
Fuchs	Reniso Kes 100

Replacement A/C compressors supplied by the Parts Department are filled with 80cc (2.70 oz.) of A/C refrigerant oil.

Refrigerant system, discharging

Note

Follow safety precautions on page 87.2 when discharging or charging A/C refrigerant system.

WARNING

Automotive refrigerant containing CFC's is hazardous to the earth's atmosphere. To protect our environment, use an Underwriter's Laboratory (UL) approved refrigerant recovery/recycling unit such as **Kent-Moore ACR³**, or equivalent, whenever discharging an A/C system.

WARNING

The A/C system should be serviced only by trained personnel familiar with:

- equipment use
- related safety procedures
- regulations governing the discharging/handling/disposal of automotive refrigerants.

WARNING

Always wear safety goggles when charging or discharging system. Be sure work area is well ventilated.

Avoid inhaling fumes when using flame type leak detector. Refrigerant-12 becomes poisonous gas after coming into contact with open flame.

carDiagn.com

CAUTION

Always follow manufacturer's instructions when using a refrigerant recovery/recycling unit.

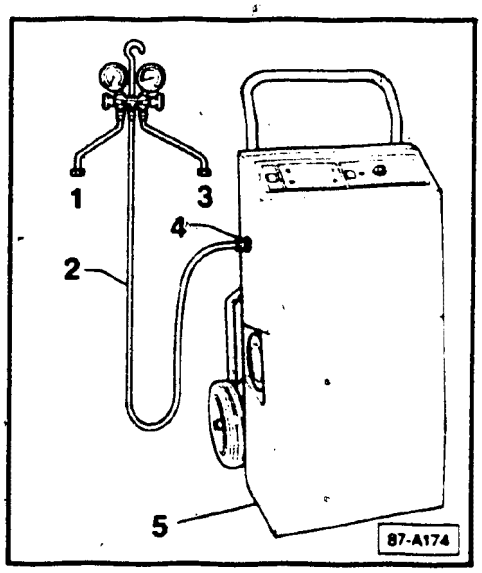

- close both valves on A/C manifold gauge set
- connect manifold gauge low pressure hose **1** to A/C low pressure service valve on vehicle
- remove A/C Refrigerant High Pressure Switch (identified by red housing) and connect hose **3** from high pressure gauge to high pressure service valve
- connect manifold gauge hose **2** to inlet connection **4** on refrigerant recovery/recycling unit **5**
- following refrigerant recovery/recycling unit manufacturer's instructions, discharge A/C system into refrigerant recovery/recycling unit
- close manifold gauge valves when refrigerant is fully discharged

THIS FRAME INTENTIONALLY LEFT

BLANK

uncordiagram.com

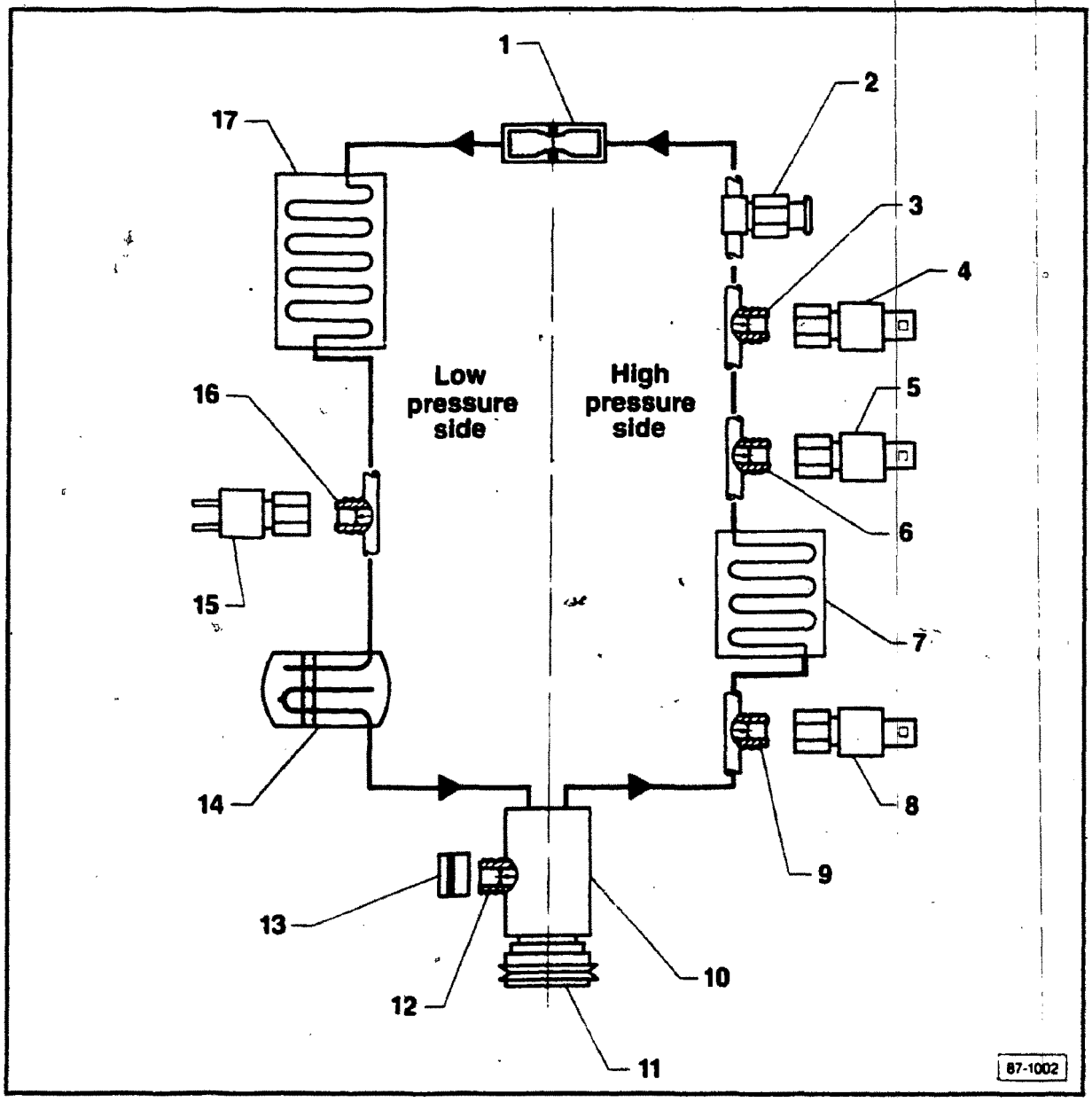

1 — Restrictor
- removing: Fig. 4
- O-ring: 9.3 mm inside diameter
  1.8 mm thickness

2 — Safety valve
- O-ring: 9.3 mm inside diameter
  1.8 mm thickness
- torque: **10.0 Nm (7.5 ft lb)**

3 — High pressure valve

4 — A/C refrigerant high pressure switch
- housing color: yellow or green
- operating pressures:
  closes: 13.1-17.5 bar (189.9-253.7 psi)
  opens: 10.6-15.0 bar (153.7-217.5 psi)
- O-ring: 9.3 mm inside diameter
  1.8 mm thickness
- torque: **10.0 Nm (7.5 ft lb)**

5 — A/C high pressure cut-out switch
(5-cylinder motor)
- red housing
- opens: 28.2 bar-31.0 bar
  (408.9 psi-449.5 psi)
- closes: 10.3 bar-17.3 bar
  (149.3 psi-253.7 psi)
- O-ring: 9.3 mm inside diameter
  1.8 mm thickness
- torque: **10 Nm (7.5 ft lb)**

6 — High pressure service valve
(5-cylinder motor)
- for A/C refrigerant high pressure switch
- for charging and discharging A/C refrigerant system

7 — Condenser
- O-ring: inlet: 14.0 mm inside diameter
  1.8 mm thickness
- O-ring: outlet: 7.5 mm inside diameter
  1.8 mm thickness
- torque on inlet: **26.5 Nm (19.5 ft lb)**
- torque on outlet: **16.5 Nm (12.0 ft lb)**

Note

When removing condensers on vehicles with 5-cylinder motors, first unbolt A/C refrigerant line from evaporator to condenser.

8 — A/C high pressure cut-out switch
(4-cylinder motor)

9 — High pressure service valve
(4-cylinder motor)
- for A/C refrigerant high pressure switch
- for charging and discharging A/C system

10 — A/C compressor
- O-ring seal on low pressure connection:
  17.2 mm inside diameter
  1.8 mm thickness
- O-ring seal on high pressure connection:
  14.0 mm inside diameter
  1.8 mm thickness
- torque on low pressure connection
  42 Nm (31.0 lb ft)
- torque on high pressure connection
  26.5 Nm (19.5 lb ft)

11 — A/C compressor clutch

12 — Low pressure service valve
for charging and discharging A/C refrigerant system

13 — Cap

14 — Accumulator
- O-ring: inlet: 17.2 mm inside diameter
  1.8 mm thickness
  outlet: 17.2 mm inside diameter
  1.8 mm thickness
- torque: inlet: **42.0 Nm (31.8 ft lb)**
  outlet: **42.0 Nm (31.8 ft lb)**

15 — A/C refrigerant low pressure switch
- operating pressures:
  opens: 1.45-1.6 bar
  (21.0 psi-23.2 psi)
  closes: 2.9-3.2 bar
  (42.0 psi-46.4 psi)
- O-ring: 9.3 mm inside diameter
  1.8 mm thickness
- torque: **5.5 Nm (4.0 ft lb)**

16 — Low pressure valve

17 — Evaporator
- refrigerant lines removing/installing, Fig. 3
- O-ring: inlet: 10.8 mm inside diameter
  1.8 mm thickness
  outlet: 17.2 mm inside diameter
  1.8 mm thickness
- torque: **16 Nm (11.8 ft lb)**

WARNING

Automotive refrigerant containing CFC's is hazardous to the earth's atmosphere. To protect our environment, use an Underwriter's Laboratory (UL) approved refrigerant recovery/recycling unit such as **Kent-Moore ACR³**, or equivalent, whenever discharging an A/C system.

carediagram.com

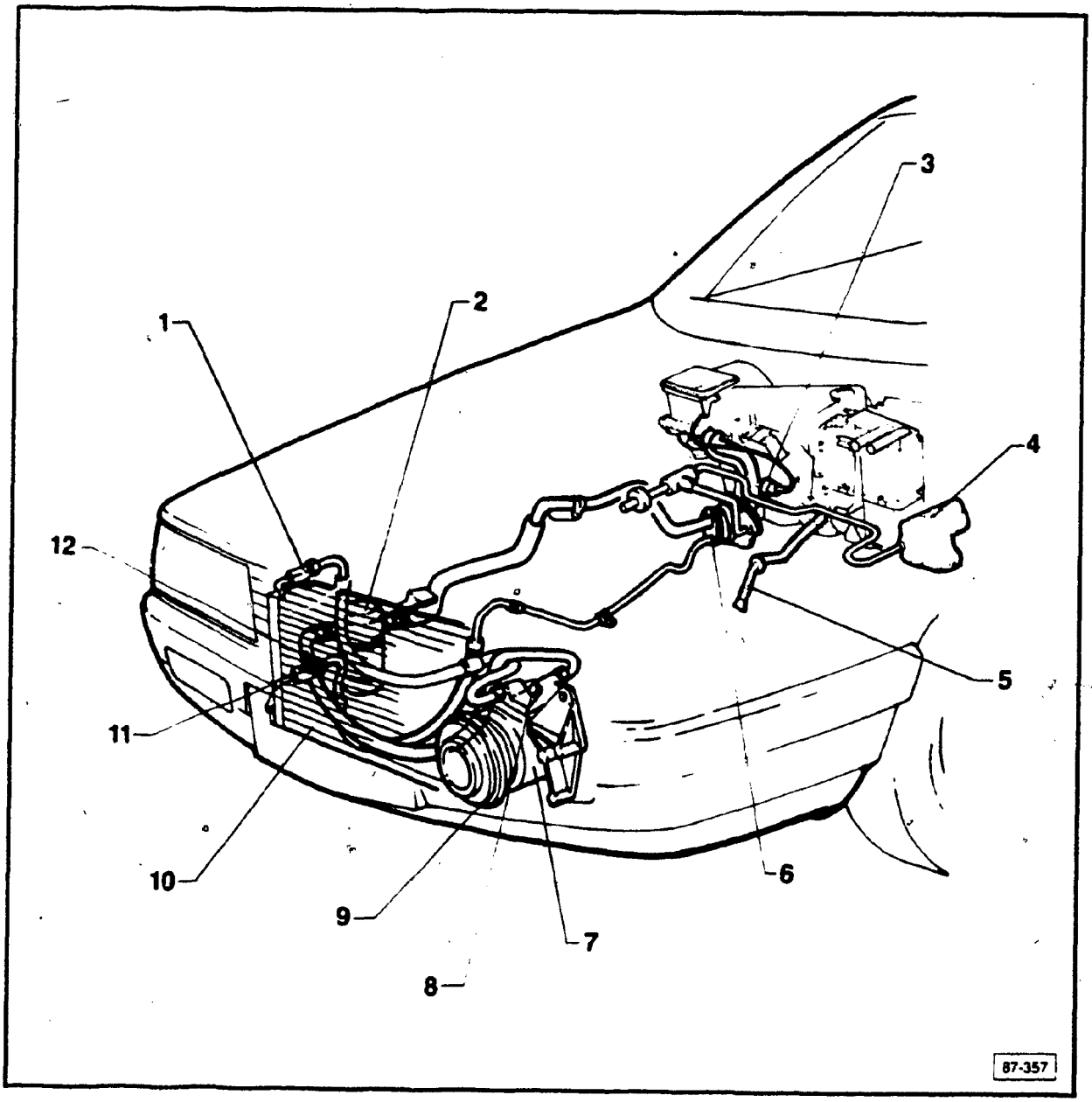

1 — **A/C high pressure cut-out switch**
removing installing. Fig 1

2 — **Accumulator**

3 — **A/C refrigerant low pressure switch**
removing installing. Fig 5

4 — **Vacuum reservoir**
vacuum system layout. see Index
vacuum system. checking. see Index

5 — **Water drain hose**
checking. Fig. 6
removing installing. see Index

6 — **Restrictor**
Fig. 13

7 — **A/C compressor**
high pressure relief valve Fig 15
V-belt tension Fig 8
removing installing. see Index

8 — **Low pressure service valve**

9 — **A/C compressor clutch**
repairing, see Index

10 — **Condenser**

11 — **A/C refrigerant high pressure switch**
removing installing. Fig 3

12 — **A/C refrigerant safety switch**
see Fig. 15

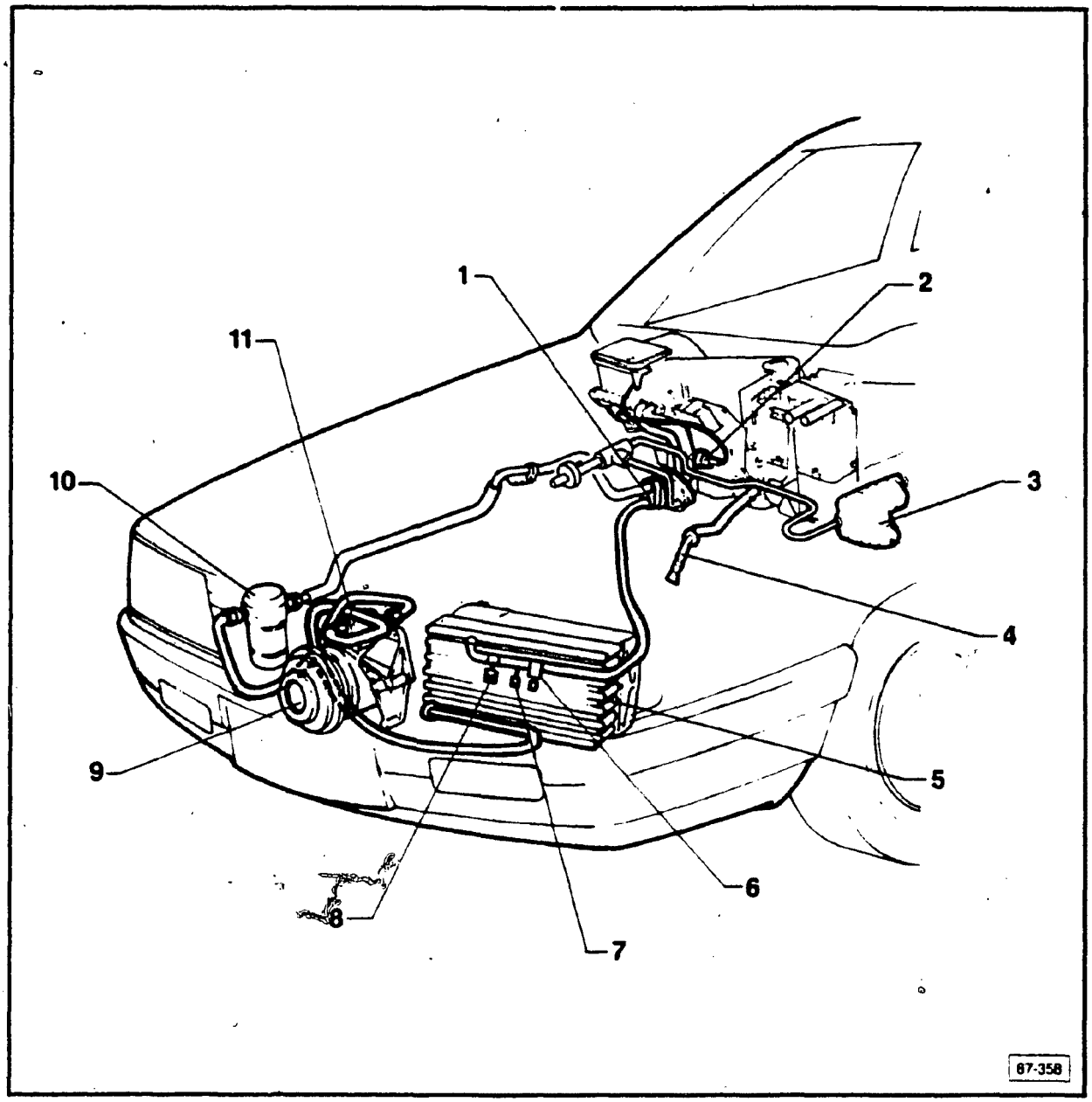

1 — **Restrictor**
Fig. 13

2 — **A/C refrigerant low pressure switch**
removing/installing, Fig. 5

3 — **Vacuum reservoir**
vacuum hose layout, see Index
vacuum system checking, see Index

4 — **Water drain hose**
removing/installing, Fig. 7

5 — **Condenser**

6 — **A/C refrigerant safety switch**

7 — **A/C refrigerant high pressure switch**
removing/installing, Fig. 4

8 — **A/C high pressure cut-out switch**
removing/installing, Fig. 2

9 — **A/C compressor and clutch**
V-belt tension, Fig. 9
removing/installing, see Index
repairing, see Index

10 — **Accumulator**

11 — **Low pressure service valve**

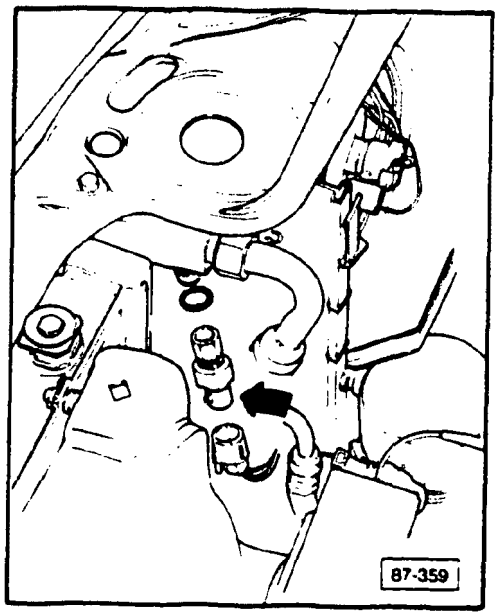

▶ **Fig. 1 A/C high pressure cut-out switch (4-cylinder engine)**

Switch is identified by red housing (**arrow**).

Switches A/C compressor clutch **OFF** when refrigerant pressure goes too high.

Note

This switch can be removed without discharging the A/C refrigerant system.

Tightening torque:
- 10 Nm (7.5 ft lb)

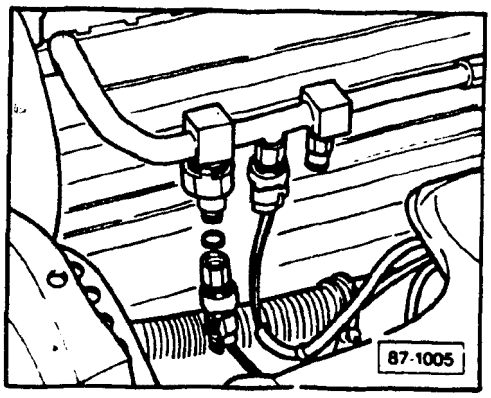

▶ **Fig. 2 A/C high pressure cut-out switch (5-cylinder engine)**

Switch is identified by red housing.

Switches A/C compressor clutch **OFF** when refrigerant pressure goes too high.

Note

This switch can be removed without discharging the A/C refrigerant system.

Tightening torque:
- 10 Nm (7.5 ft lb)

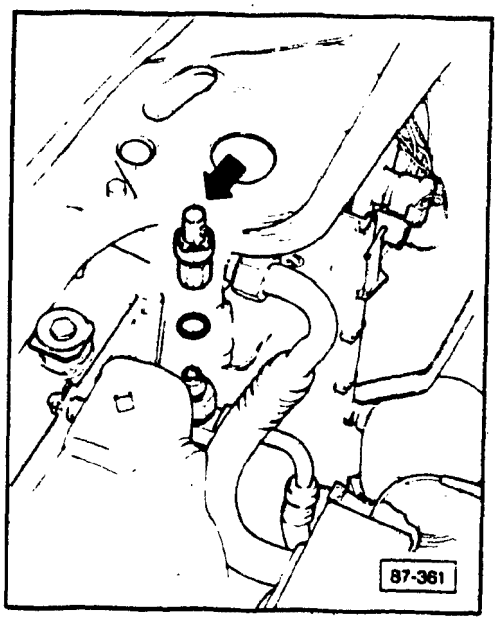

▶ **Fig. 3 A/C refrigerant high pressure switch (4-cylinder engine)**

Switch has yellow housing or green housing with welded connections (**arrow**).

Switches radiator cooling fan to 2nd stage when refrigerant pressure reaches specified level.

Note

This switch can be removed without discharging the A/C refrigerant system.

Tightening torque:
- 10 Nm (7.5 ft lb)

autodata

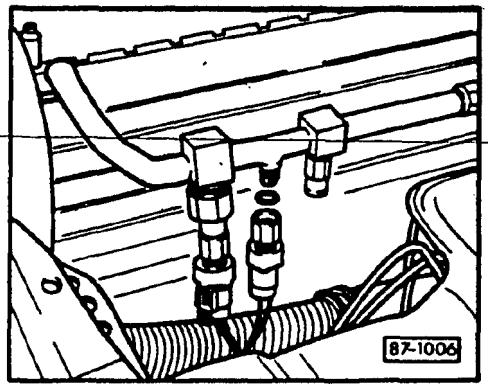

▶ **Fig. 4 A/C refrigerant high pressure switch (5-cylinder engine)**

Switch has yellow housing or green housing with welded connections.

Switches radiator cooling fan to 2nd stage when refrigerant pressure reaches specified level.

Note

This switch can be removed without discharging the A/C refrigerant system.

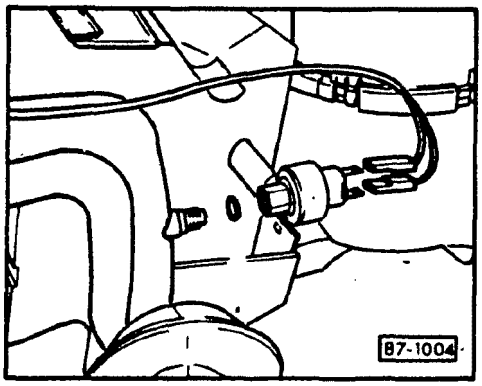

▶ **Fig. 5 A/C refrigerant low pressure switch**

Switch controls evaporator temperature by cycling A/C compressor clutch **ON** and **OFF**.

Switch also turns A/C compressor clutch **OFF** when refrigerant pressure is too low.

Installation location

On passenger side of vehicle between evaporator housing and firewall.

Note

This switch can be removed without discharging the A/C refrigerant system.

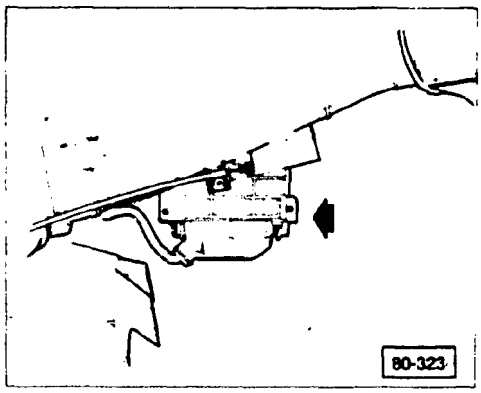

▶ **Removing**

- remove close-out panel under glove compartment
- remove fuel injection control unit (**arrow**)
- remove A/C refrigerant low pressure switch

CAUTION

Wear protective glasses and gloves when removing the A/C refrigerant low pressure switch.

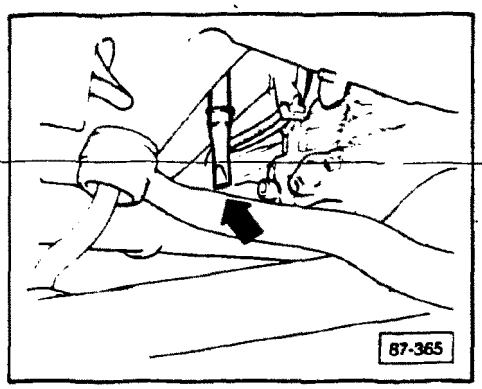

▶ **Fig. 6 Water drain valve**

Located in right hand side of engine compartment next to transmission housing **(arrow)**.

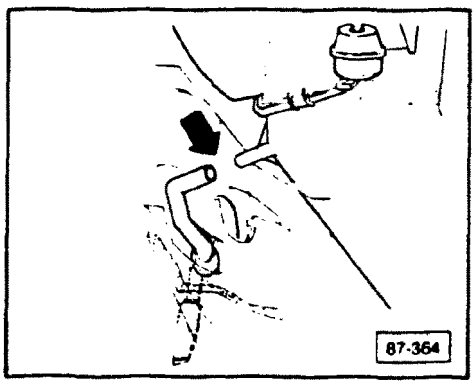

▶ **Fig. 7 Water drain valve, installing**

- lubricate hose connection lightly with Vaseline
- push water drain hose on connection to stop **(arrow)**

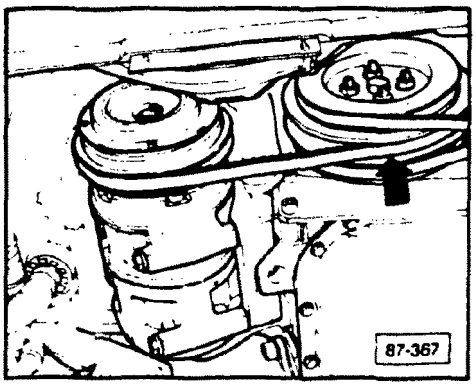

▶ **Fig. 8 A/C compressor V-belt (4-cylinder engine)**

V-belt is properly tensioned when it can be pushed in approximately 5mm (5/16 in.) at center.

The V-belt tension is adjusted by adding or subtracting shims between the crankshaft pulley halves **(arrow)**.

Store unused shims on front half of crankshaft pulley between pulley and tightening bolts.

Note

When adjusting V-belt, tighten crankshaft pulley bolts alternately while turning crankshaft.

Tightening torque: 22 Nm (16.2 ft lb)

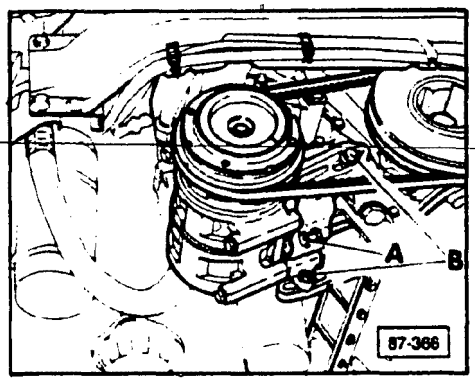

▶ **Fig. 9 A/C compressor V-belt (5-cylinder engine)**

V-belt is properly tensioned when it can be pushed in approximately 5mm (5/16 in.) at center.

- loosen bolts **B**
- tension belt by turning bolt **A**
- tighten bolts **B**
  - 22 Nm (16.2 ft lb)
- back bolt **A** out until there is at least a 5mm gap between engine block and bolt
- lock adjusting bolt **A** in place with nut

> **CAUTION**
>
> Bolt **A** is used for adjustment only. Do not leave this bolt tensioned against the engine block.

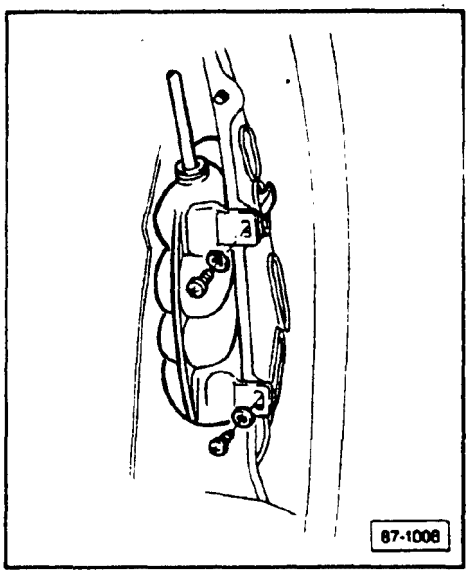

▶ **Fig. 10 Vacuum reservoir**

The vacuum reservoir is located in the rear of the left front wheelhouse behind the wheelhousing liner.

Vacuum system, checking

- remove left front wheelhousing liner
- remove vacuum hose from vacuum reservoir
- connect vacuum pump to vacuum hose
- apply 300mbar (8.8 Hg) vacuum to system
  - reading should not drop more than 10% in two minutes

If system will not maintain vacuum,

- check vacuum hoses and components for leaks
- repair as necessary

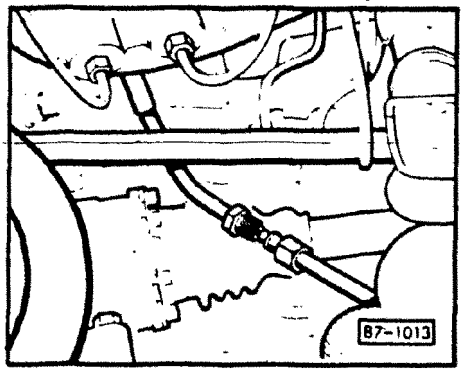

▶ **Fig. 11 Connection in refrigerant high pressure line (5-cylinder engine only)**

- remove this connection before removing condenser in vehicles with 5-cylinder engines
  - torque: 16.5 Nm (12.1 ft lb)

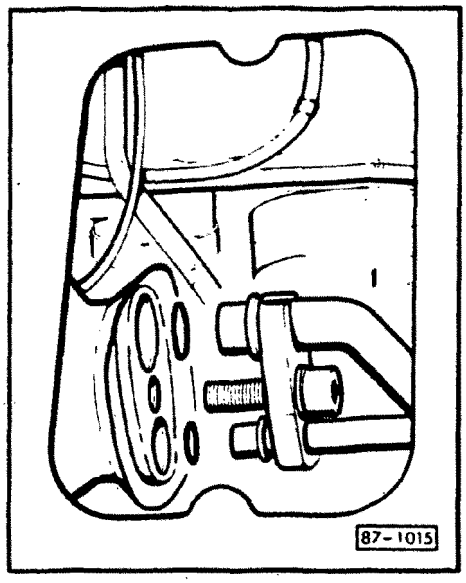

▶ **Fig. 12 A/C refrigerant line connection to evaporator**

Note

Be sure there is no tension on refrigerant lines before tightening.

- torque: 16.0 Nm (12.1 ft lb)

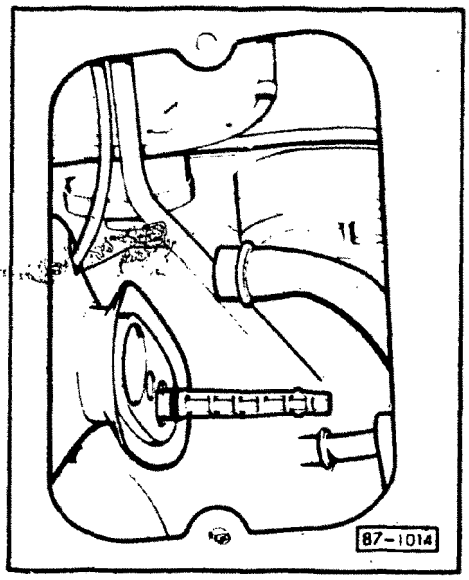

▶ **Fig. 13 Restrictor, removing/installing**

- remove refrigerant lines from evaporator
- pull restrictor from evaporator with needle nose pliers
- install restrictor with new O-ring
- install refrigerant lines
  - 16.0 Nm (12.1 ft lb)

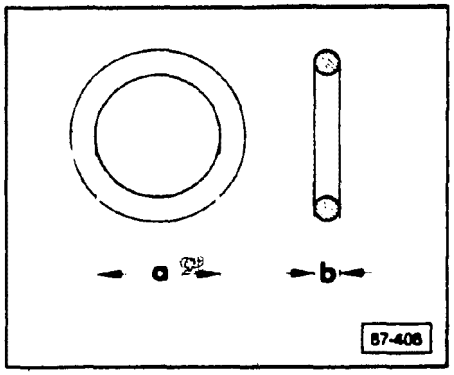

▶ **Fig. 14 O-ring gaskets**

Note

Do not re-use O-ring gaskets.

Lubricate O-ring seals with A/C refrigerant oil before installing.

O-ring Specifications	a (mm)	b (mm)
• Compressor (low pressure side) • Evaporator outlet • Accumulator	17.2	1.8
• Compressor (high pressure side) • Condenser inlet	14.0	1.8
• Evaporator inlet	10.8	1.8
• Refrigerant high pressure switch • Refrigerant low pressure switch • Safety switch	9.3	1.8
• Condenser outlet • Connection in high pressure refrigerant line (5-cylinder only)	7.5	1.8
• Restrictor	7.5	1.5

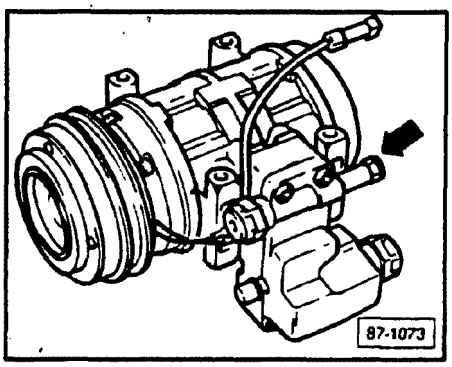

Fig. 15 A/C compressor with high pressure relief valve

▶ Since November 1987, A/C compressors with a high pressure relief valve are being installed on Audi 80/90 vehicles with 4 cylinder motors.

With the installation of these compressors, the high pressure relief valve on the condenser has been eliminated.

CAUTION

If an A/C compressor or condenser is replaced during repairs, check that at least one pressure relief valve remains in the refrigerant system.

WARNING

Automotive refrigerant containing CFC's is hazardous to the earth's atmosphere. To protect our environment, use an Underwriter's Laboratory (UL) approved refrigerant recovery/recycling unit such as **Kent-Moore ACR³**, or equivalent, whenever discharging an A/C system.

CAUTION

Always discharge refrigerant from air conditioner system before loosening connections, hoses, etc.

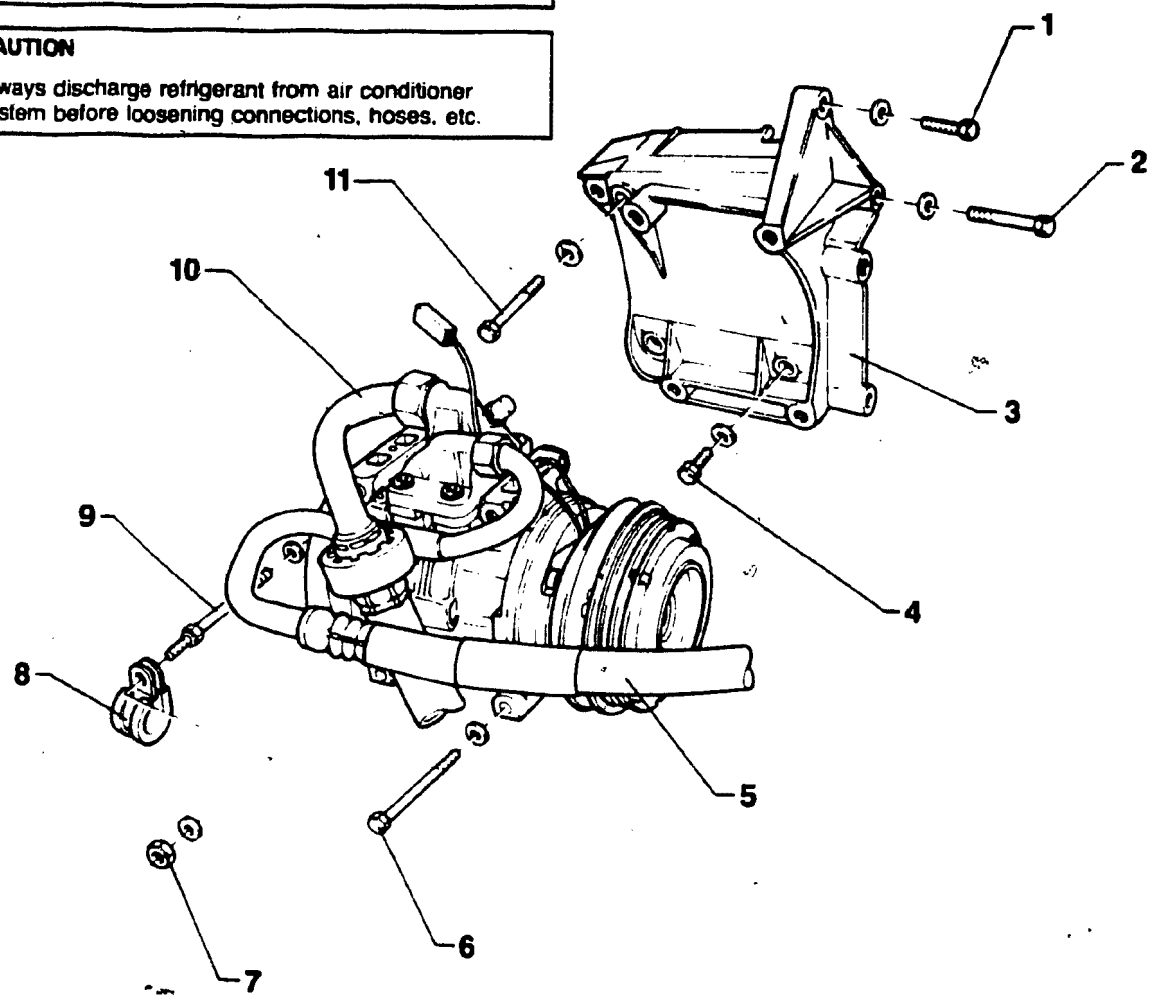

1 — 32 Nm (23.6 ft lb)
2 — 32 Nm (23.6 ft lb)
3 — A/C compressor bracket
4 — 32 Nm (23.6 ft lb)
5 — A/C refrigerant high pressure hose
6 — 32 Nm (23.6 ft lb)
7 — 32 Nm (23.6 ft lb)
8 — Clamp
9 — 32 Nm (23.6 ft lb)
10 — A/C refrigerant low pressure hose
11 — 32 Nm (23.6 ft lb)

CAUTION

Always discharge refrigerant from air conditioner system before loosening connections, hoses, etc.

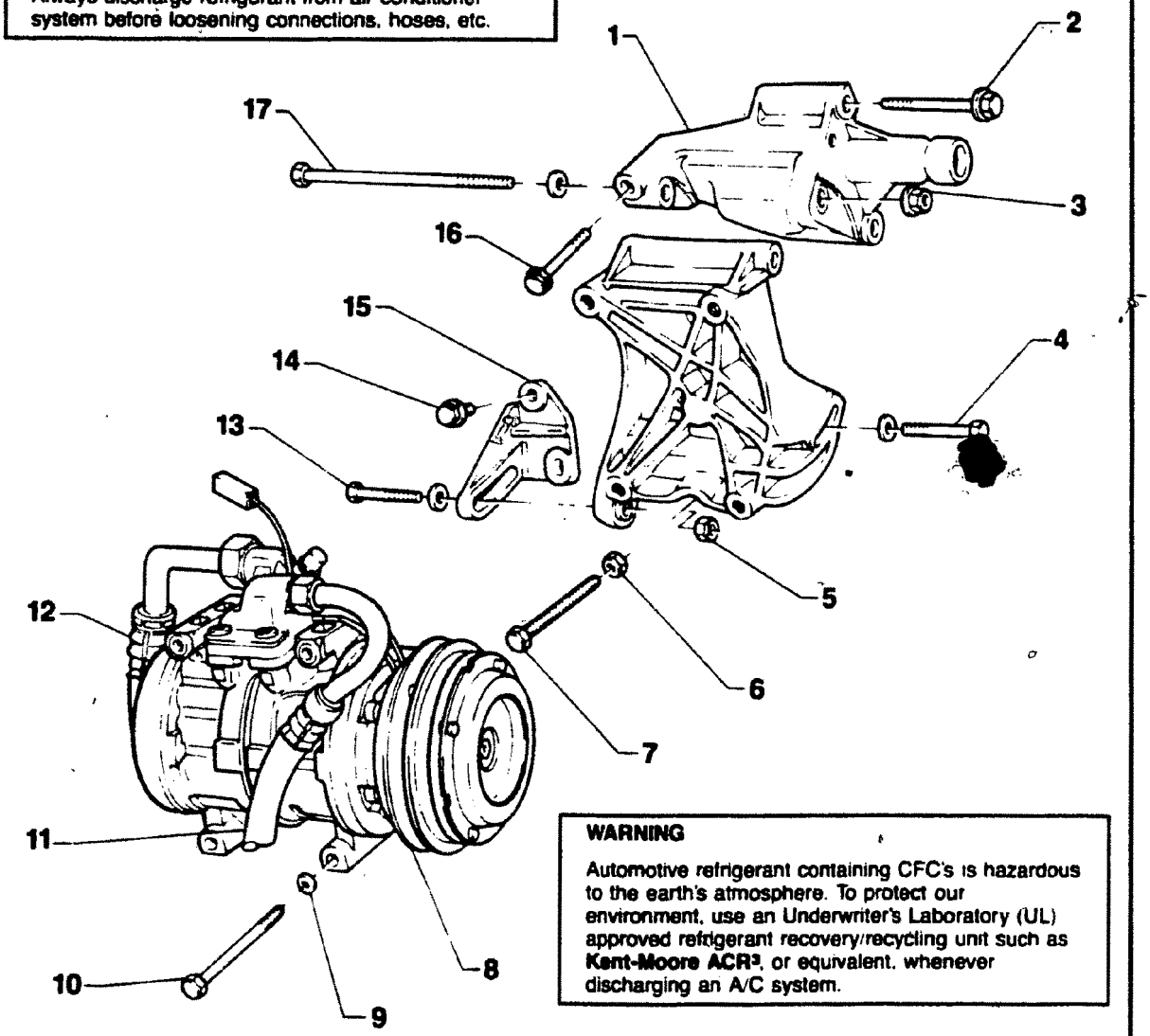

WARNING

Automotive refrigerant containing CFC's is hazardous to the earth's atmosphere. To protect our environment, use an Underwriter's Laboratory (UL) approved refrigerant recovery/recycling unit such as **Kent-Moore ACR³**, or equivalent, whenever discharging an A/C system.

1 — **Bracket**

2 — **Bolt/washer assembly**
45 Nm (33.1 ft lb)

3 — **Self locking nut**
45 Nm (33.1 ft lb)
always replace

4 — **22 Nm (16.2 ft lb)**

5 — **Self locking nut**
22 Nm (16.2 ft lb)
always replace

6 — **Nut**

7 — **Bolt**
for adjusting belt tension

8 — **A/C compressor and clutch**

9 — **Washer**

10 — **22 Nm (16.2 ft lb)**

11 — **A/C refrigerant high pressure hose**

12 — **A/C refrigerant low pressure hose**

13 — **Bolt**

14 — **Bolt/washer assembly**

15 — **Angle bracket**

16 — **Bolt/washer assembly**
22 Nm (16.2 ft lb)

17 — **Bolt**

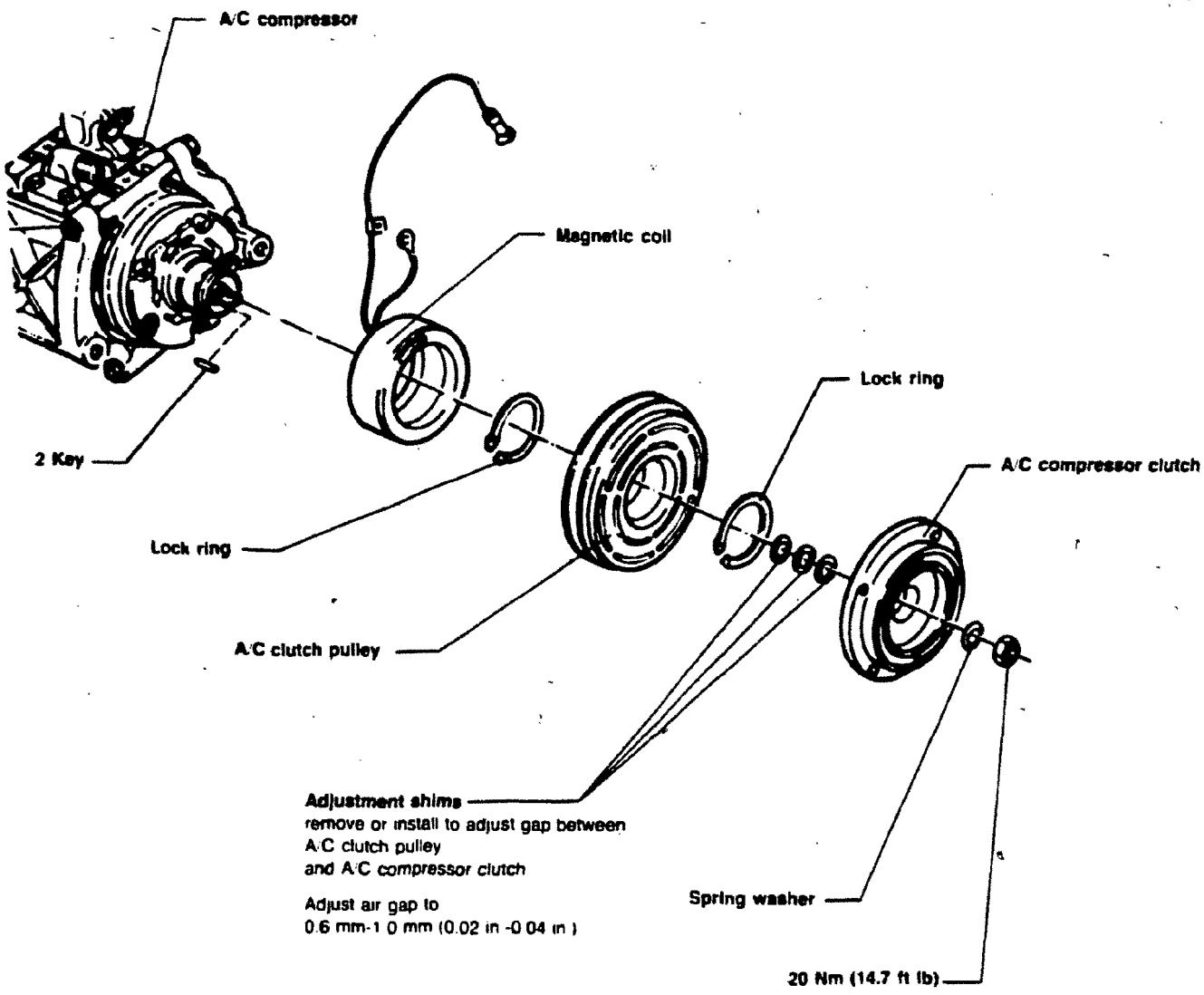
A/C compressor
Magnetic coil
Lock ring
2 Key
A/C compressor clutch
Lock ring
A/C clutch pulley
Adjustment shims
remove or install to adjust gap between
A/C clutch pulley
and A/C compressor clutch
Adjust air gap to
0.6 mm-1 0 mm (0.02 in -0 04 in)
Spring washer
20 Nm (14.7 ft lb)

87-381

A/C compressor clutch, removing/ installing

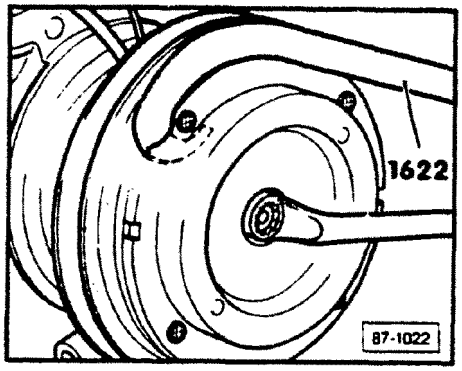

- hold A/C compressor clutch with tool and loosen and remove nut
  - 20 Nm (14.7 ft lb)

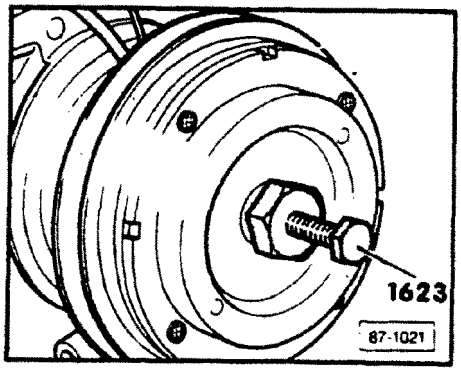

- remove A/C compressor clutch

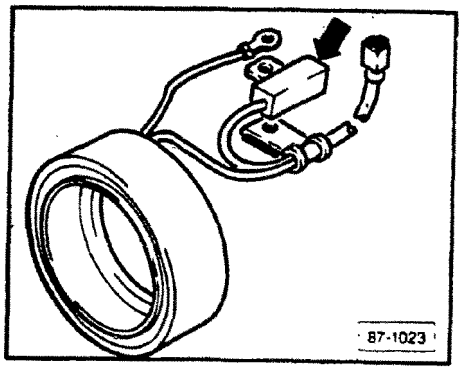

CAUTION

Only install magnetic coil with protective diode (**arrow**).

Note

Repairs can be made to these components without discharging the A/C refrigerant system.

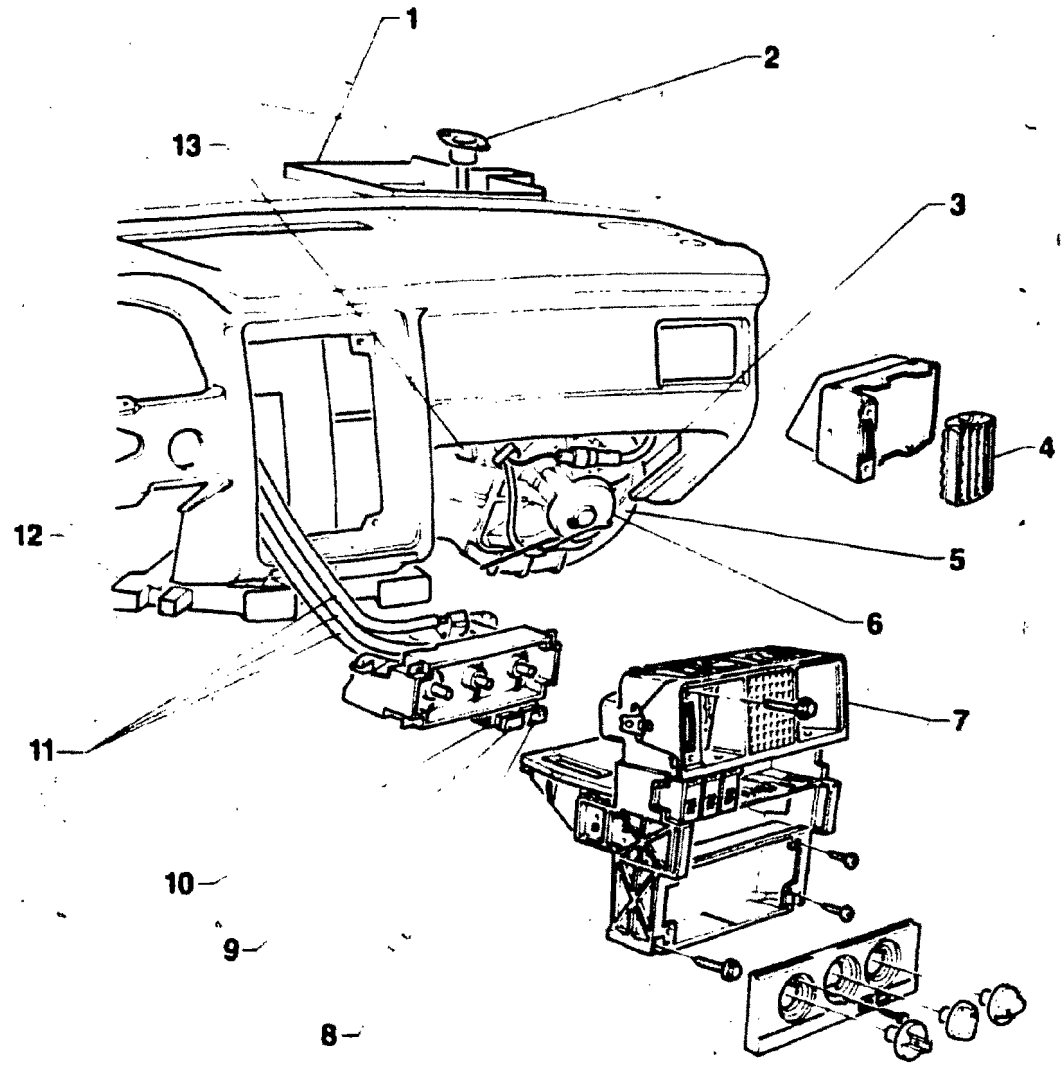

1 — **Fresh air/recirculation door**
checking, Fig. 1

2 — **Outside temperature sensor**
removing/installing, Fig. 2

3 — **Vacuum servo**
- for fresh air/recirculation door
- checking, Fig. 5
- vacuum system layout, see Index
- checking, see Index

4 — **Instrument panel air vent**
removing/installing, Fig. 4

5 — **Two way valve**
for fresh air/recirculation door

6 — **Fresh air blower**
- removing/installing, Fig. 6
- checking, Fig. 8

7 — **Center vent/control panel**
removing/installing, Fig. 4

8 — **Fresh air/recirculation door switch**

9 — **A/C switch**

10 — **A/C control head**

11 — Bowden cable
- connections at A/C control head, Fig. 9-10
- connections at flap doors, Fig. 11-12

12 — Footwell air outlets
removing/installing, Fig. 13

13 — Fresh air blower series resistance
removing/installing, Fig. 3

carkdiagn.com

CONTINUED IN THE

BEGINNING OF NEXT ROW

carrdiagram.com

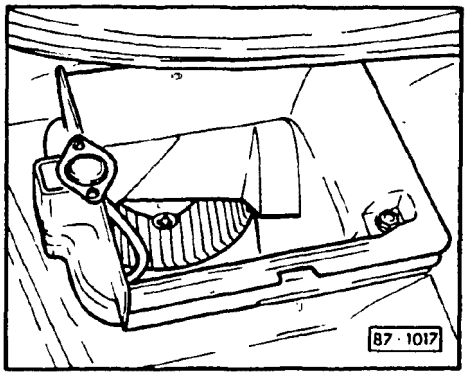

▶ **Fig. 1 Fresh air/recirculation door, checking**

- remove air plenum cover on right side
- start engine and run at idle

- push A/C switch button
- push recirculation button
  - warning light lights
  - fresh air/recirculation door closes

If warning light does not light and fresh air/recirculation door does not close,

- check voltage supply for two way valve per wiring diagram
- repair as necessary

- check vacuum system
- repair as necessary

Note

If the vacuum system fails, the fresh air/recirculation door will open and all air will be drawn into the vehicle from the outside.

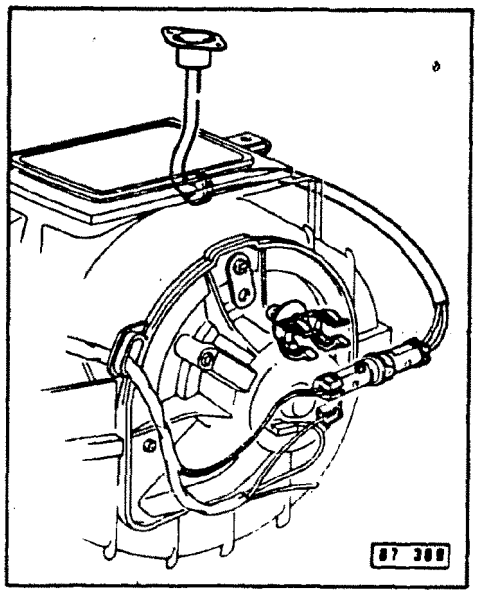

▶ **Fig. 2 Outside temperature sensor, removing/checking**

Sensor switches A/C compressor clutch **OFF** when temperature drops below specified temperature.

Sensor switches clutch **OFF:** – 1°C (30°F)

Allows clutch to be switched **ON:** + 7°C (45°F)

Removing

- remove air plenum cover
- remove glove compartment
- disconnect wires to temperature sensor
- remove sensor and pull wiring and grommet out through fresh air blower intake

Checking

- disconnect wires to sensor
- connect **VW 1119** and set to ohm scale
- place thermometer near outside temperature sensor
- spray cold water on sensor and thermometer
- measure temperature and check **VW 1119** to see when switch opens and closes

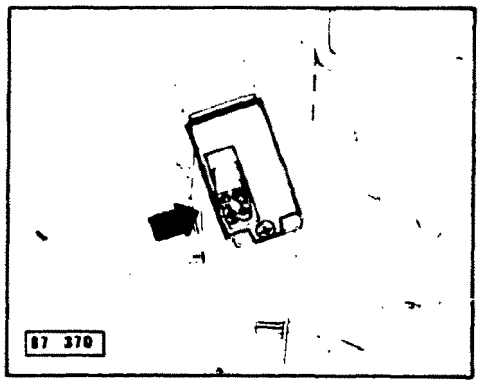

▶ **Fig. 3 Fresh air blower series resistance**

Removing/Installing

- remove glove compartment
- remove series resistance (**arrow**)

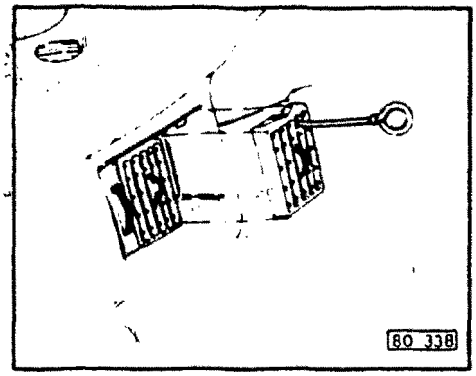

▶ **Fig. 4 Instrument panel air outlet, removing/installing**

Removing

- remove air direction vanes with self-made hook
- remove air outlet

Installing

- install air outlet
  - air outlet must snap in
- install air direction vanes with larger tab on top

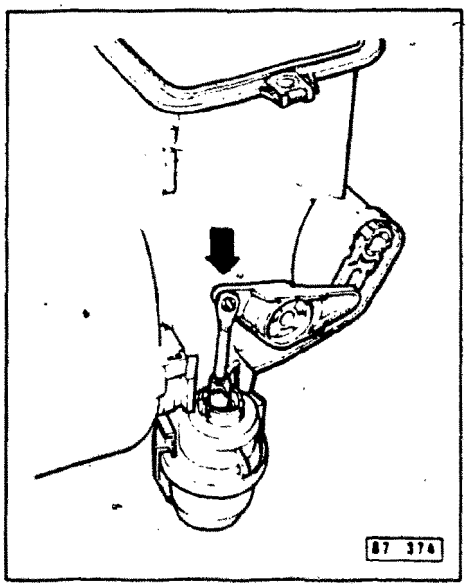

▶ **Fig. 5 Vacuum servo (for fresh air/recirculation door)**

Vacuum servo is located on passenger side of vehicle on right side of heater housing.

Checking

- remove cover under glove compartment
- connect vacuum pump to vacuum servo
- apply vacuum to vacuum servo
  - fresh air recirculation door must close

Note

Vacuum servo can only be replaced when the heater box is removed.

cardiagn.com

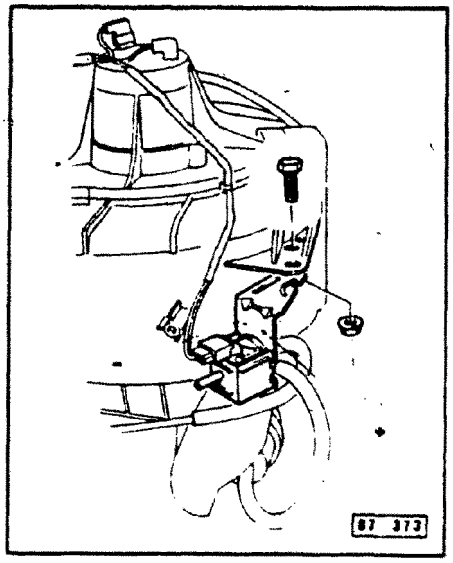

▶ **Fig. 6 Two way valve (for fresh air/recirculation door), removing**

Valve allows vacuum to be applied to vacuum servo for fresh air/recirculation door.

Located on passenger side of vehicle on right side of heater housing.

Removing

- remove cover under glove compartment
- start engine and run at idle
- push A/C switch button
- push recirculation button
  - warning light lights
  - fresh air/recirculation door closes

If warning light lights and fresh air/recirculation door does not close.

- check voltage supply for two way valve per wiring diagram
- repair as necessary
- check vacuum system, see index
- repair as necessary

Note

If the vacuum system fails, the fresh air/recirculation door will open and all air will be drawn into the vehicle from the outside.

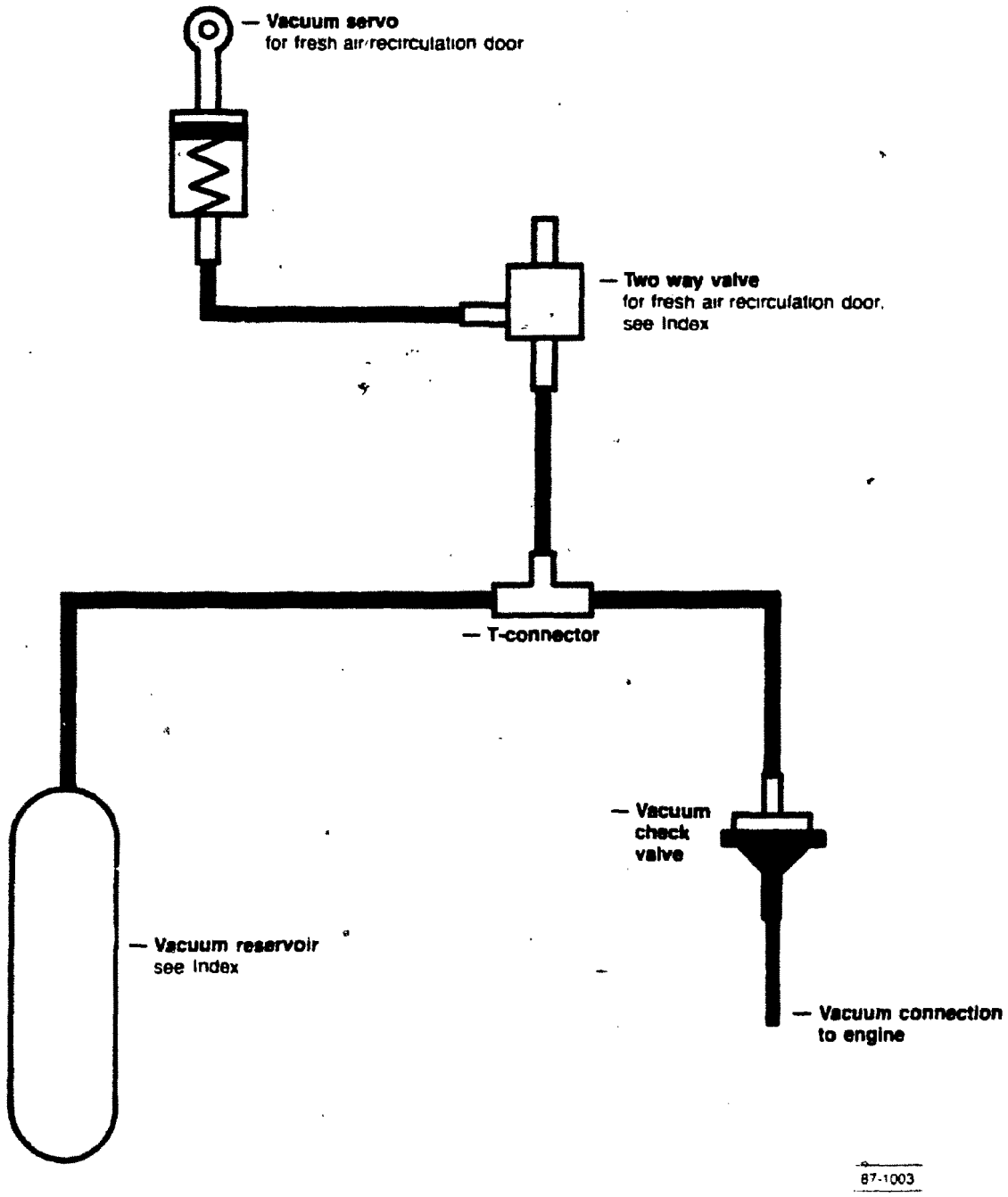
— Vacuum servo
for fresh air/recirculation door
— Two way valve
for fresh air recirculation door,
see Index
— T-connector
— Vacuum
check
valve
— Vacuum reservoir
see Index
— Vacuum connection
to engine
87-1003

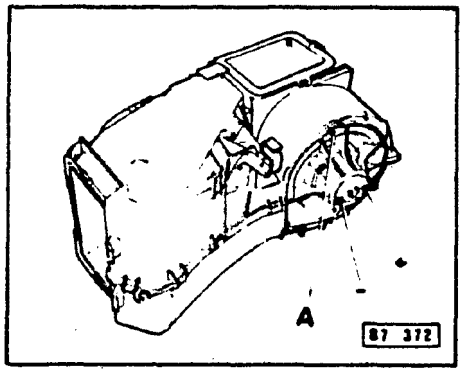

Fig. 7 Fresh air blower, removing/installing

- remove cover under glove compartment
- remove glove compartment
- remove 6 bolts (**A**)
- remove fresh air blower with anchor plate from heater housing
- separate fresh air fan and anchor plate
- remove motor

Note

Coat fitting surfaces of fresh air motor and anchor plate with silicone gasket sealer before assembling.

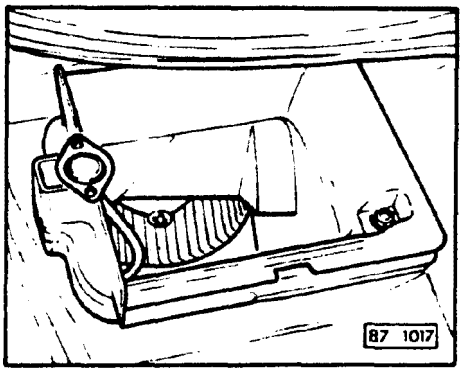

Fig. 8 Fresh air blower impeller, checking

- remove cover over air plenum on right side of vehicle
- check that impeller moves easily
- check for objects in wheel

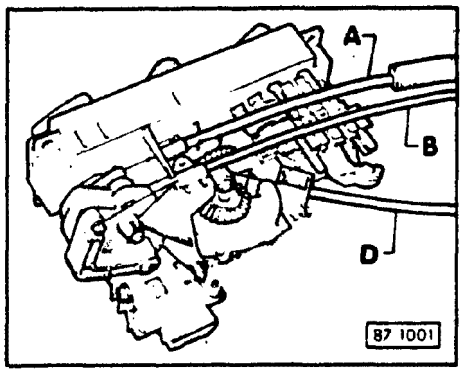

Fig. 9 Bowden cable identification on A/C control head

A = from air distribution control to flap door for floor defrost outlet

color: white

B = from air distribution control to main air distribution flap

color: black

D = from temperature control lever to temperature regulation flap

color: red

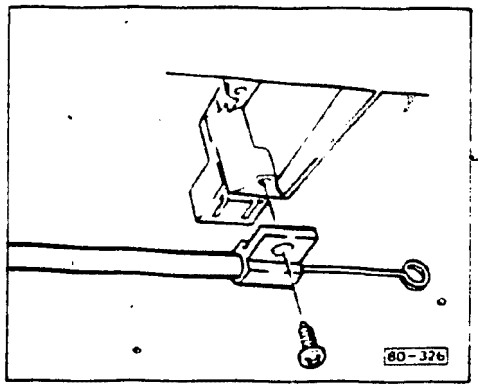

▶ **Fig. 10 Bowden cable connections on A/C control head**

Bowden cables are not adjustable.

Note

If cable retainer (**A**) breaks.
- turn cable 90° and attach with screw (**arrow**).

Note

Always replace bent or binding cables.

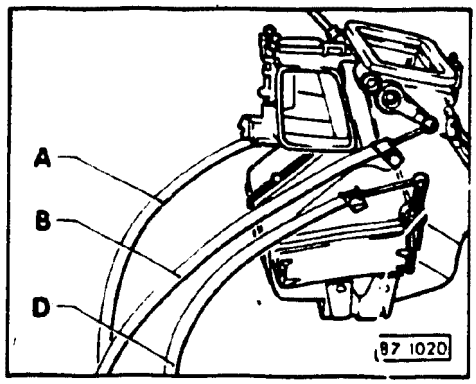

▶ **Fig. 11 Bowden cable connections on heater/ evaporator box**

A = from footwell defrost flap door to air distribution control

color: white

B = from central air distribution flap door to air distribution control

color: black

D = from temperature regulation flap to temperature regulation control

color: red

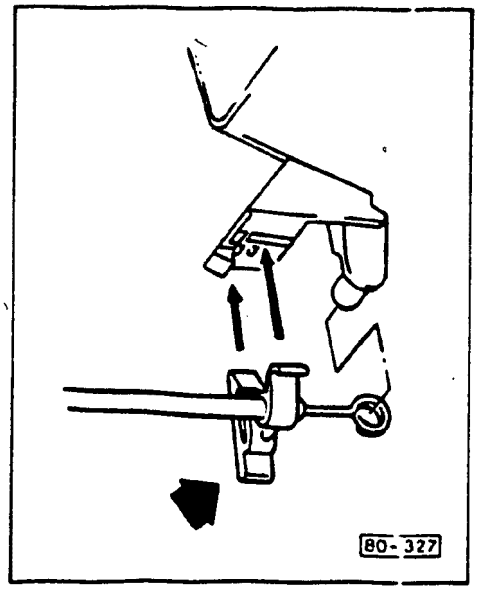

▶ **Fig. 12 Bowden cable connections on heater evaporator box**

Note

Always replace bent or binding cables.

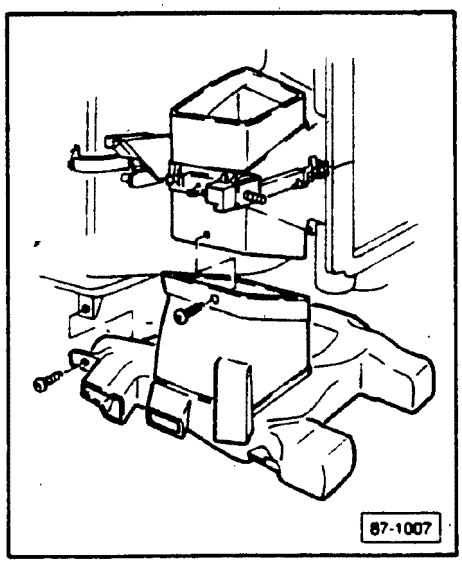

▶ **Fig. 13 Footwell air outlet, removing/installing**

- remove storage shelf on driver's side
- remove cover under glove compartment
- remove center vent/control panel
- remove ashtray
- remove instrument panel support at center tunnel
- loosen mounting bolts
- remove heater floor outlets channels, rear
- remove footwell air outlet

Fresh air intake duct mesh, installing

Debris can enter the passenger compartment through the fresh air intake duct if the intake duct mesh is missing.

Note

Clean debris from air intake before installing intake duct mesh.

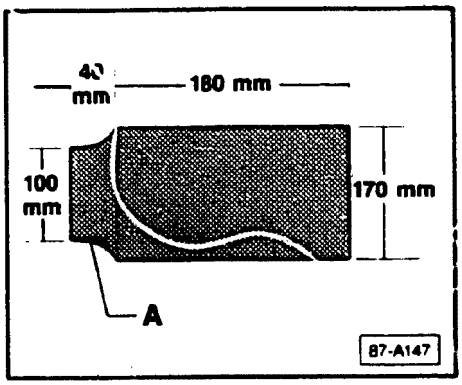

▶

- cut intake duct mesh, **P/N: 893 819 408** according to illustration
- bend section **A** up 90°

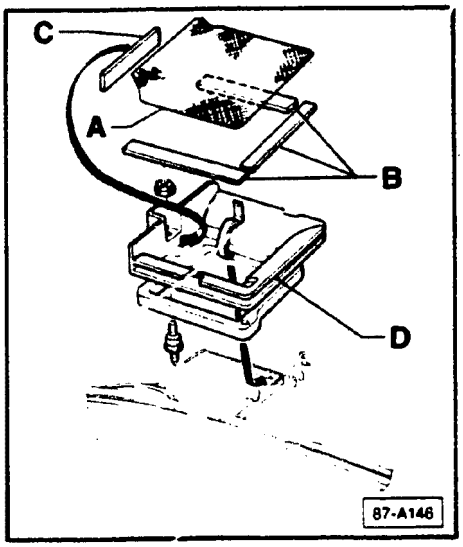

▶

- cut sealing cord **P/N: AKD 497 010 04 R10** to fit bottom of mesh (**B and C**)
- apply sealing cord to intake housing (**D**)
- press edge **A** of intake mesh onto sealing cord first
- press intake mesh onto remaining sealing cord

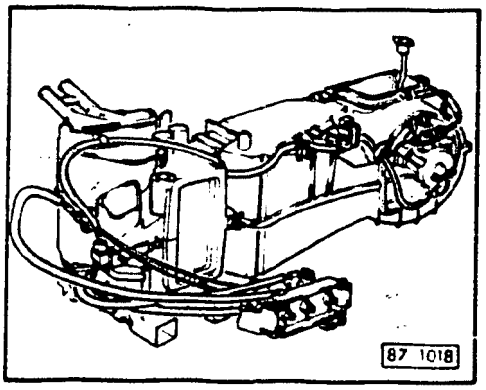

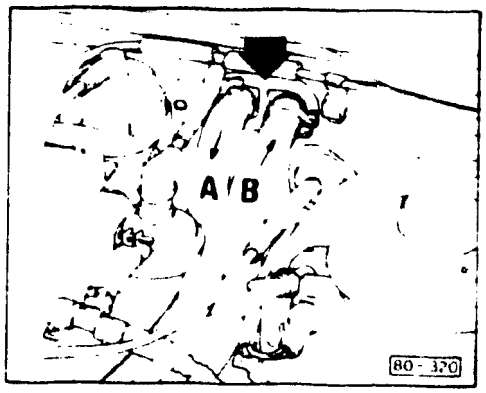

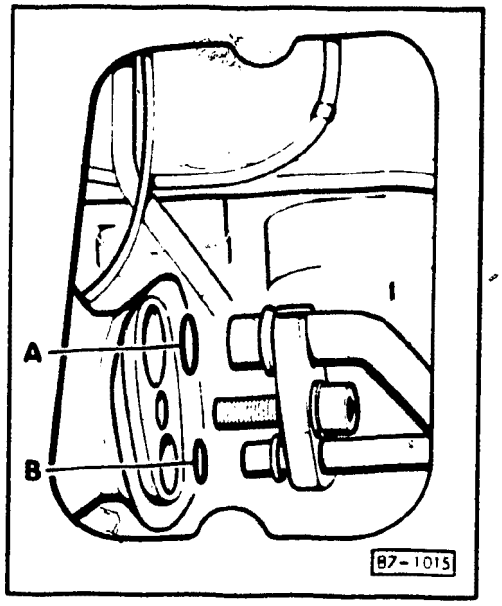

Heater/evaporator housing, removing/installing

WARNING

Automotive refrigerant containing CFC's is hazardous to the earth's atmosphere. To protect our environment, use an Underwriter's Laboratory (UL) approved refrigerant recovery/recycling unit such as **Kent-Moore ACR³**, or equivalent, whenever discharging an A/C system.

- disconnect battery cables and remove battery
- discharge refrigerant system, see A/C refrigerant system discharge procedure
- remove center vent/control panel
- remove instrument panel (see Group 70)
- clamp heater hoses **A** and **B** to prevent excess engine coolant loss

A = return to water pump
B = feed to cylinder head

- loosen clamps and remove hoses
- cap hoses
- remove A/C refrigerant lines from evaporator
  - 16 Nm (11.8 ft lb)

Note

Be sure there is no tension on refrigerant lines during installation.

cardiagn.com

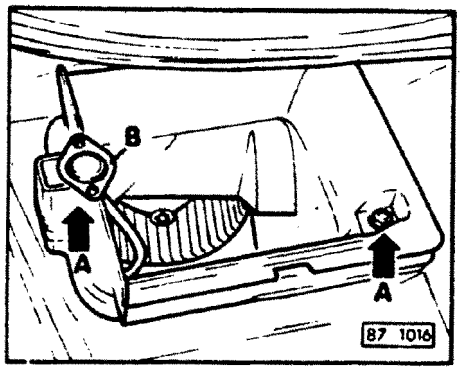

- remove right side air plenum cover
- remove outside temperature sensor **B**
- remove mounting bolts **A**
- remove air intake

Note

Be sure gasket around air intake seals correctly during installation.

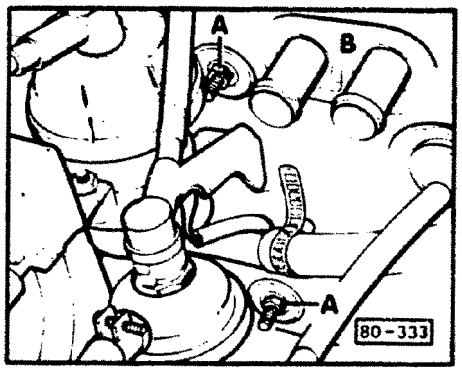

- remove nuts **A** on fire wall

Note

Be sure rubber grommet **B** seals properly during installation.

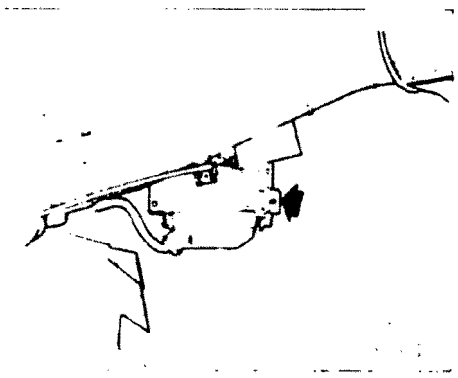

- remove vacuum hose from two way valve
- remove water drain hose from heater/evaporator housing
- remove fuel injection control unit (**arrow**)
- remove heater/evaporator housing

Note

Check Bowden cables for kinks and ease of movement before reinstalling heater/evaporator housing. Replace cables if necessary.

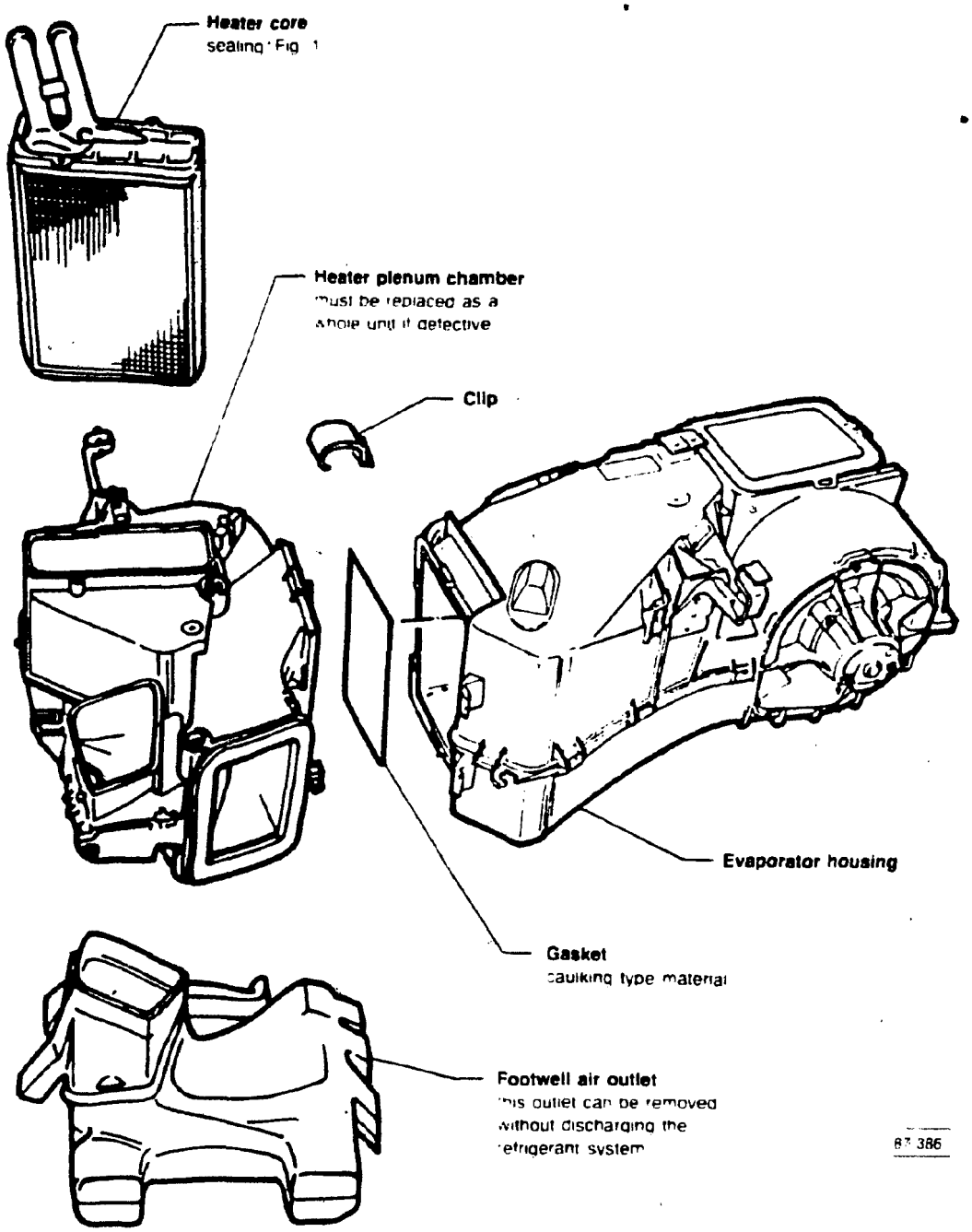
Heater core
sealing: Fig. 1
Heater plenum chamber
must be replaced as a whole unit if defective
Clip
Evaporator housing
Gasket
caulking type material
Footwell air outlet
this outlet can be removed without discharging the refrigerant system
87 386

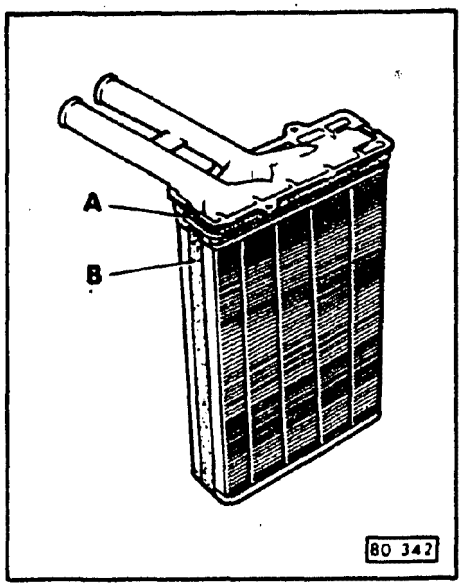

▶ **Fig. 1 Heater core**

Sealing

Gaskets **A** and **B** must seal heater core completely without gaps.

Note

If the heater core does not lock firmly in place during installation,

- secure with self-tapping screws

autodiagnos.com

Note

Be sure evaporator case halves seal properly during installation.

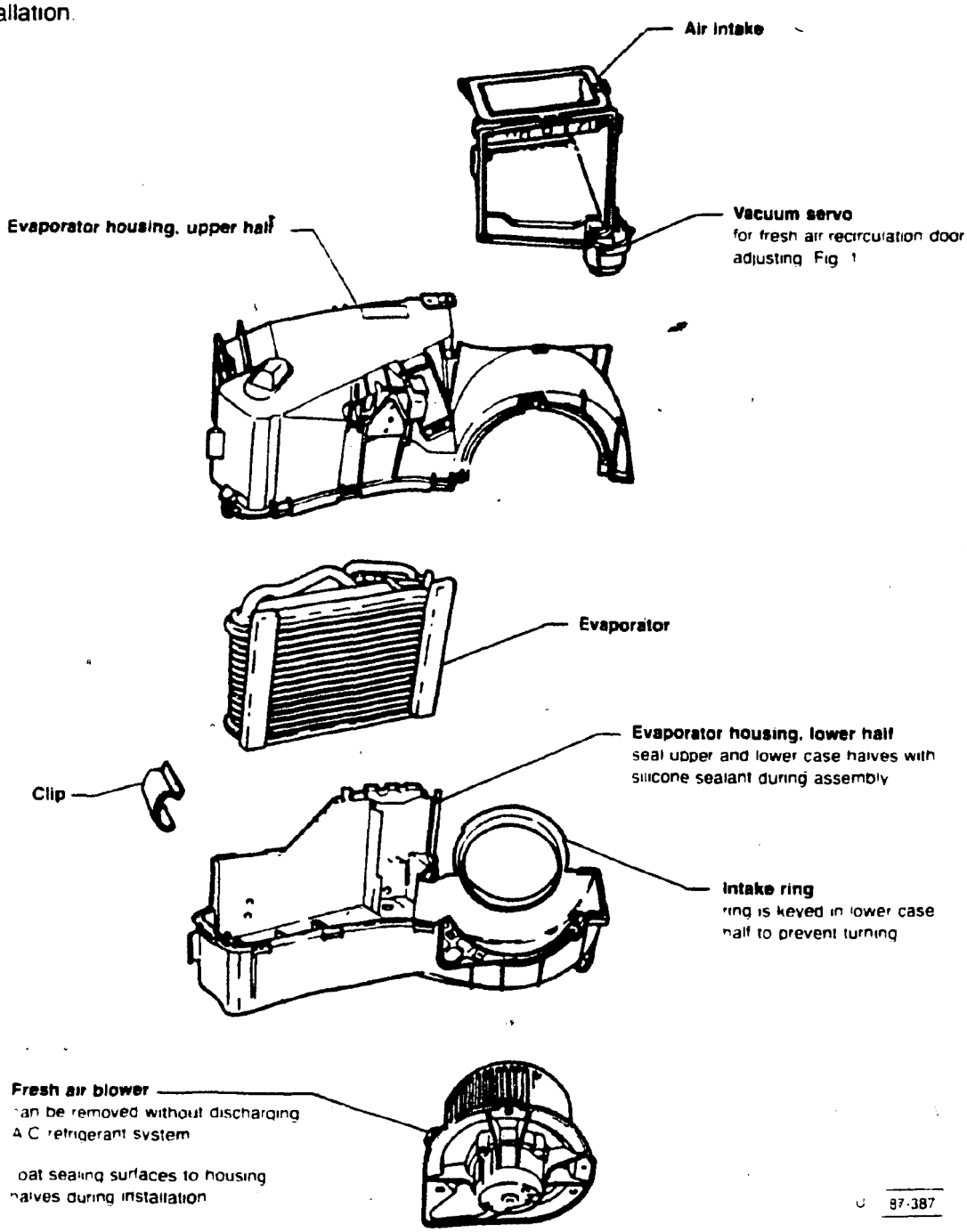

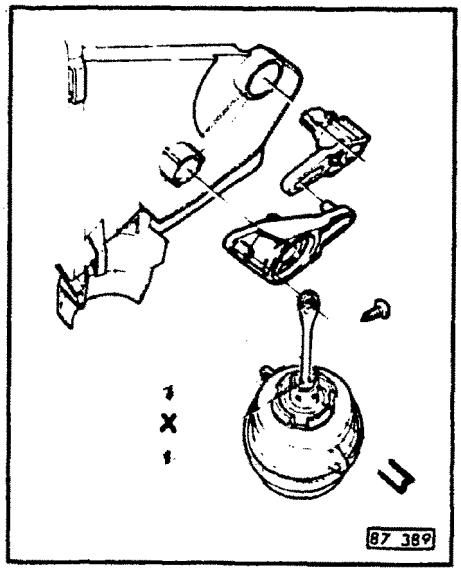

▶ **Fig. 1 Vacuum servo, removing/installing**

- remove screw
- remove vacuum servo

Note

Length of vacuum servo arm **A** is adjustable.

Adjusting

- remove clip **B**
- adjust arm height
  - **X** = 50mm (approximately 2 in.)
- install clip

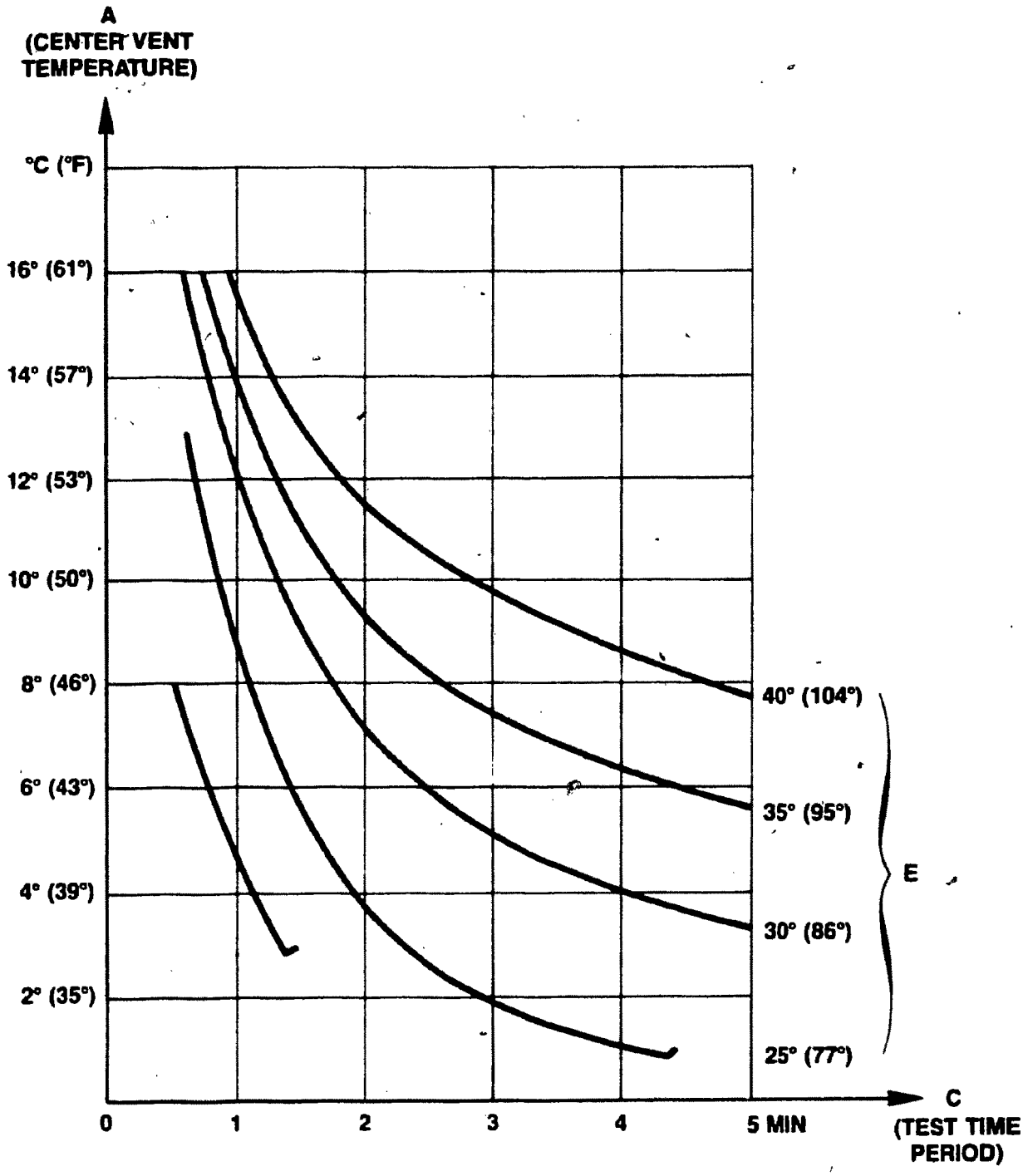
A
(CENTER VENT
TEMPERATURE)
°C (°F)
16° (61°)
14° (57°)
12° (53°)
10° (50°)
8° (46°)
6° (43°)
4° (39°)
2° (35°)
0
1
2
3
4
5 MIN
C
(TEST TIME
PERIOD)
40° (104°)
35° (95°)
30° (86°)
25° (77°)
E

87-393

A/C system, checking

Troubleshooting preparations

Observe the following:

- do not park car in sunlight
- V-belt properly adjusted
- condenser and radiator free of obstructions
- air ducts for condenser and radiator properly installed

- close valves on pressure test gauges
- remove A/C refrigeration high pressure switch
- connect line from high pressure test gauge to valve

- connect line from low pressure test gauge to low pressure service valve on A C compressor

- run engine until warm
- push A/C switch button and fresh air recirculation door button
  - fresh air/recirculation door light lights
  - A/C compressor runs
  - radiator cooling fan runs in stage one
  - fresh air/recirculation door is closed

- switch ignition **OFF**

Test preparation

- switch ignition **ON**
- open doors
- run fresh air blower for approximately 5 minutes on speed **4** to stabilize evaporator temperature

- close sunroof, doors and windows

- switch A/C switch **ON**
- push fresh air/recirculation button
  - fresh air/recirculation door closes
  - indicator light **ON**
- set temperature to full cold position
- set fresh air blower speed to **4**
- open all instrument panel vents

- adjust air distribution so all air comes only from instrument panel vents

- place thermometer at air intake for heater evaporator housing (under glove compartment)

- measure temperature and match to closest temperature curve at **E** on graph

This is your base measurement

Test

- insert thermometer in center vent
- start engine

After approximately 30 seconds,
- raise idle speed to 2000 RPM

THIS STARTS THE TEST TIME PERIOD

- measure temperature at center vent
- compare temperature at center vent with temperature from selected curve at **E** (your base measurement) in relation to time period **C**

Note

Temperature must not vary from graph by more than ±5°C (9°F).

If specified values are not obtained,
- check that radiator cooling fan is operating on 2nd stage (high speed)
- check position of temperature flap arm on evaporator/heater housing

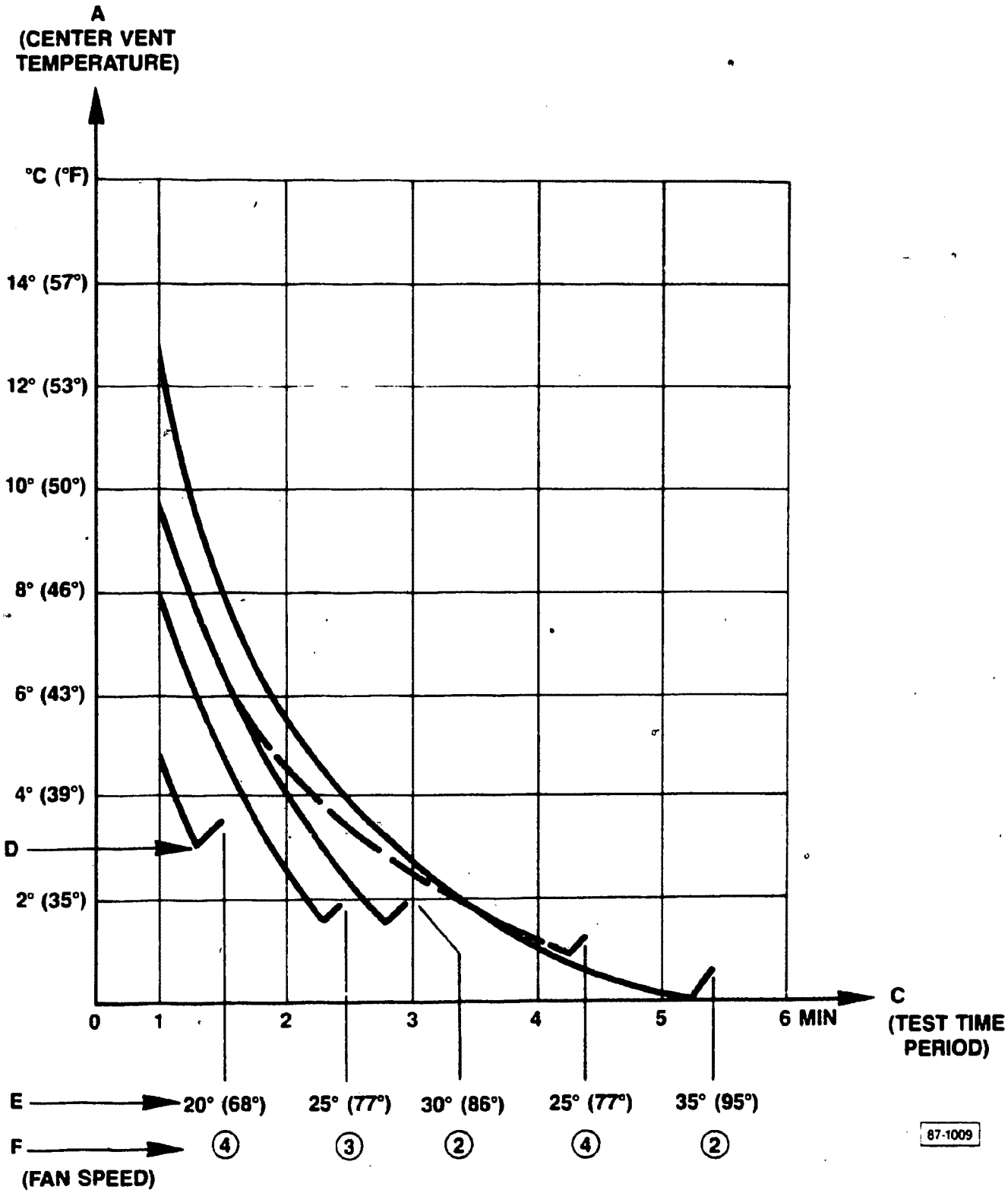
A
(CENTER VENT
TEMPERATURE)
°C (°F)
14° (57°)
12° (53°)
10° (50°)
8° (46°)
6° (43°)
4° (39°)
D
2° (35°)
0
1
2
3
4
5
6 MIN
C
(TEST TIME
PERIOD)
E
20° (68°)
25° (77°)
30° (86°)
25° (77°)
35° (95°)
F
4
3
2
4
2
(FAN SPEED)
87-1009

A/C refrigerant low pressure switch, checking

Note

This switch will cycle the A/C compressor **ON** and **OFF** depending on the pressure in the refrigerant system.

A/C refrigerant low pressure switch is used to regulate interior temperature and prevent evaporator icing.

Test preparation

- switch ignition **ON**
- open doors
- run fresh air blower for approximately 5 minutes on speed **4** to stabilize evaporator temperature
- close sunroof, doors and windows
- switch A/C switch **ON**
- push fresh air/recirculation button
  - fresh air/recirculation door closes
  - indicator light lights
- set temperature to full cold position
- set fresh air blower speed to **4**
- open all instrument panel vents
- adjust air distribution so all air comes only from instrument panel vents
- place thermometer at air intake for heater/evaporator housing (under glove compartment)
- measure temperature and match to closest temperature curve at **E** on graph

This is your base measurement

- adjust fresh air blower speed (**F** on graph) according to selected temperature curve at **E**

Test

- insert thermometer in center vent
- start engine

After approximately 30 seconds,
- raise idle speed to 2000 RPM

THIS STARTS THE TEST TIME PERIOD

- measure temperature at center vent
- compare temperature at center vent with temperature from selected curve **B** (your base measurement) in relation to time period **C**
- read temperature from center when A/C compressor clutch disengages (**D** on graph)
- compare temperature with temperature curve you have chosen on graph
  - A/C compressor clutch must disengage at point indicated on graph for the temperature curve you have selected (your base measurement) + 5°C (9°F) tolerance

carsdiagnose.com

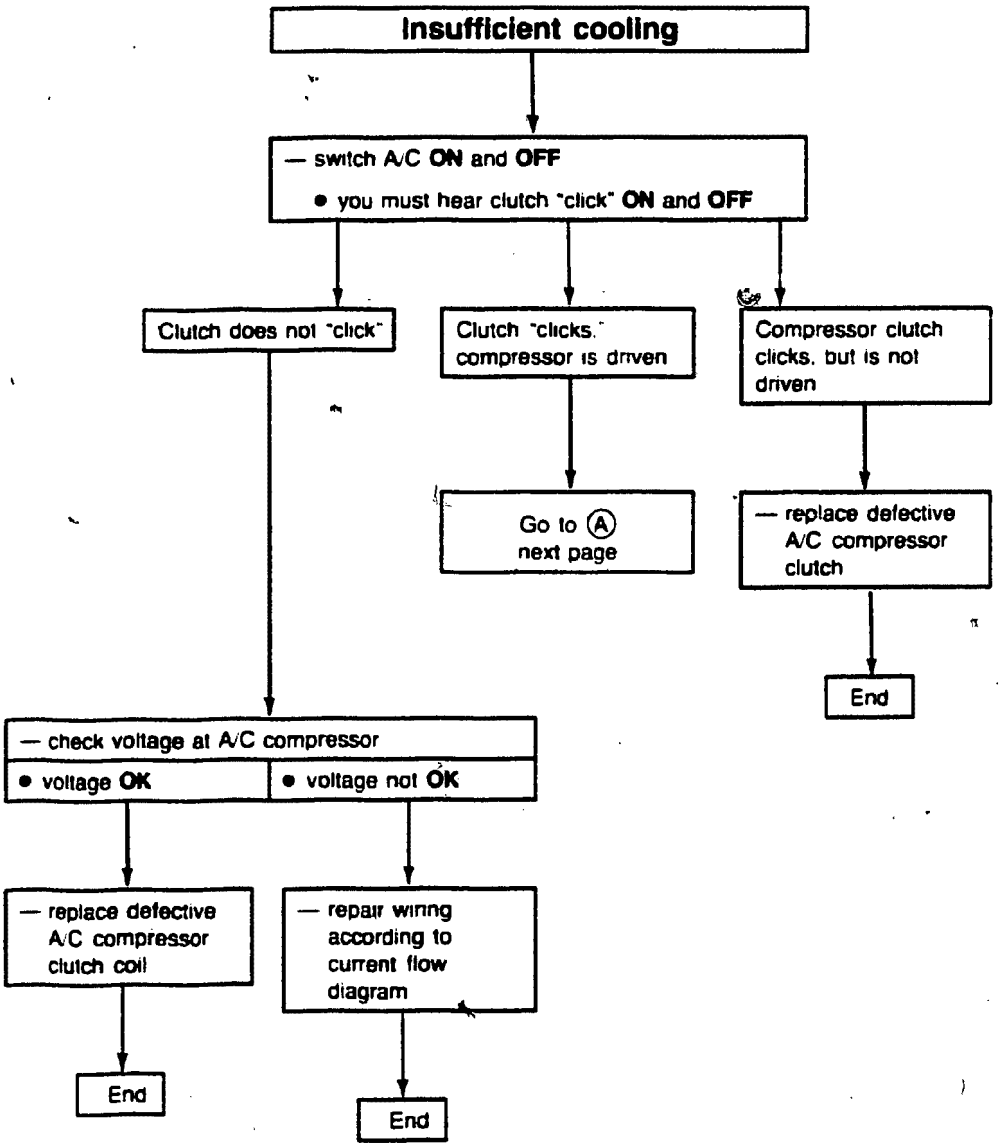
Insufficient cooling
— switch A/C ON and OFF
• you must hear clutch "click" ON and OFF
Clutch does not "click"
Clutch "clicks," compressor is driven
Compressor clutch clicks, but is not driven
Go to Ⓐ next page
— replace defective A/C compressor clutch
End
— check voltage at A/C compressor
• voltage OK
• voltage not OK
— replace defective A/C compressor clutch coil
— repair wiring according to current flow diagram
End
End

Pressure specifications
— test with gauge
- low pressure = 1.3 bar-3.2 bar (19 - 46 psi) at idle
- high pressure = 10.6 bar-17.6 bar (154 - 255 psi) at idle

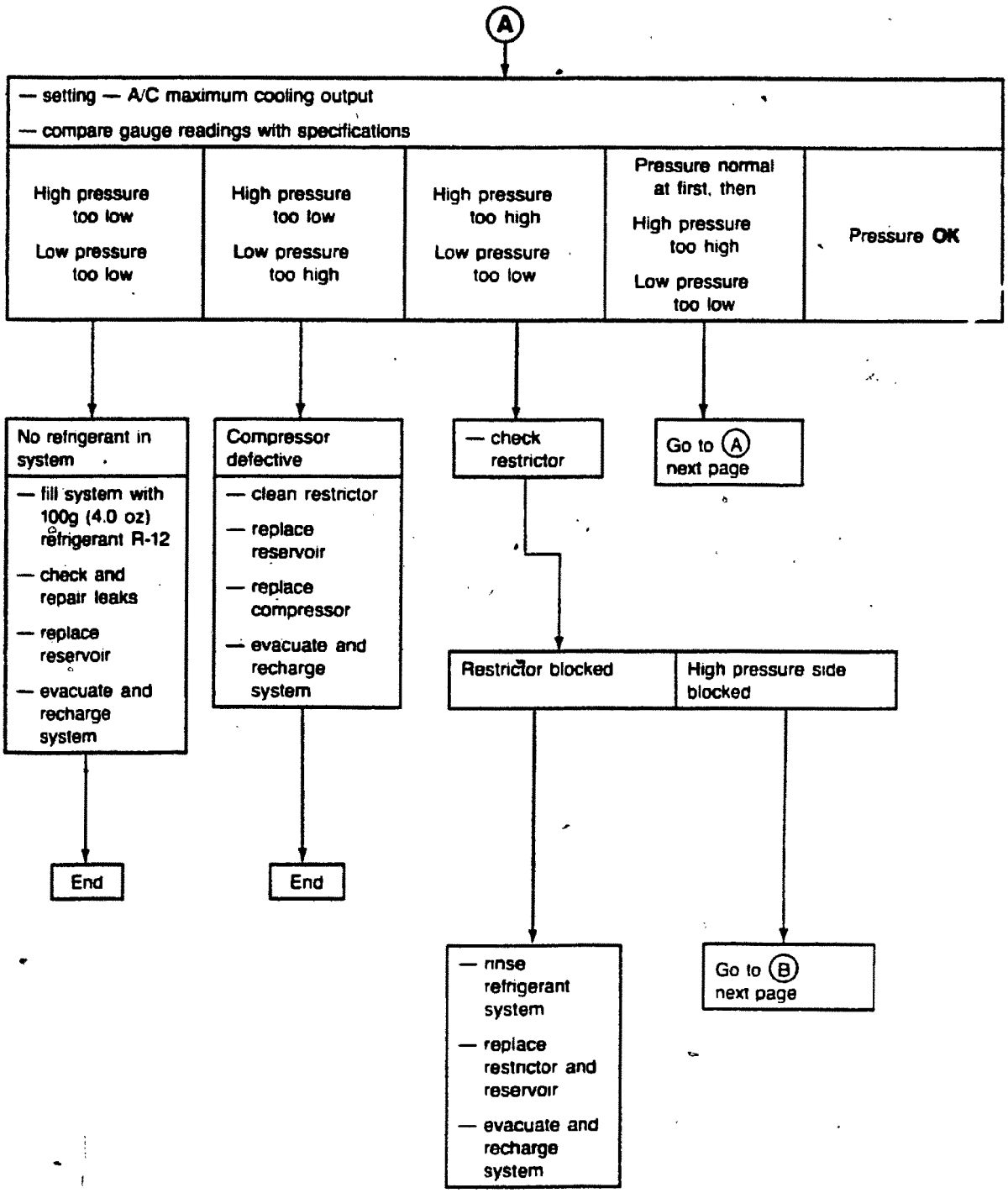

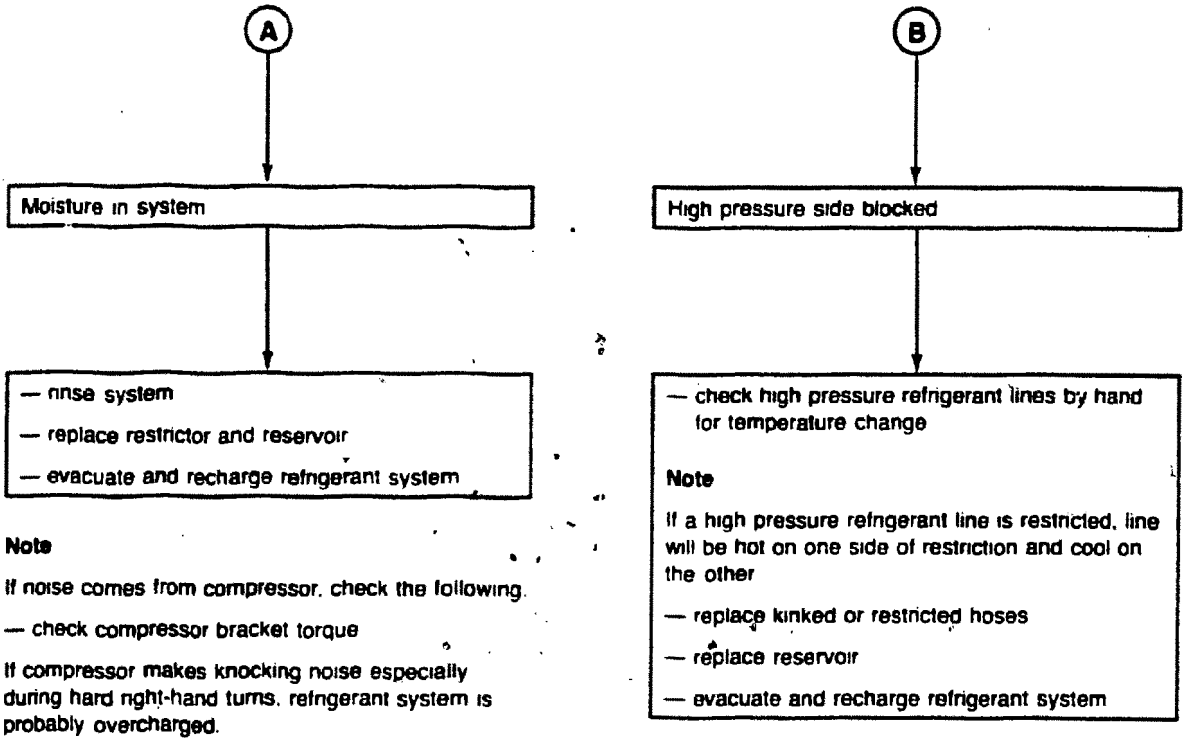

Note

If noise comes from compressor, check the following.

— check compressor bracket torque

If compressor makes knocking noise especially during hard right-hand turns, refrigerant system is probably overcharged.

CONTINUED IN THE

BEGINNING OF NEXT ROW

coordinate scale

Note

The components listed on this page are in the engine compartment in addition to the components shown on page 87.8 (4-cylinder engine) and page 87.9 (5-cylinder engine).

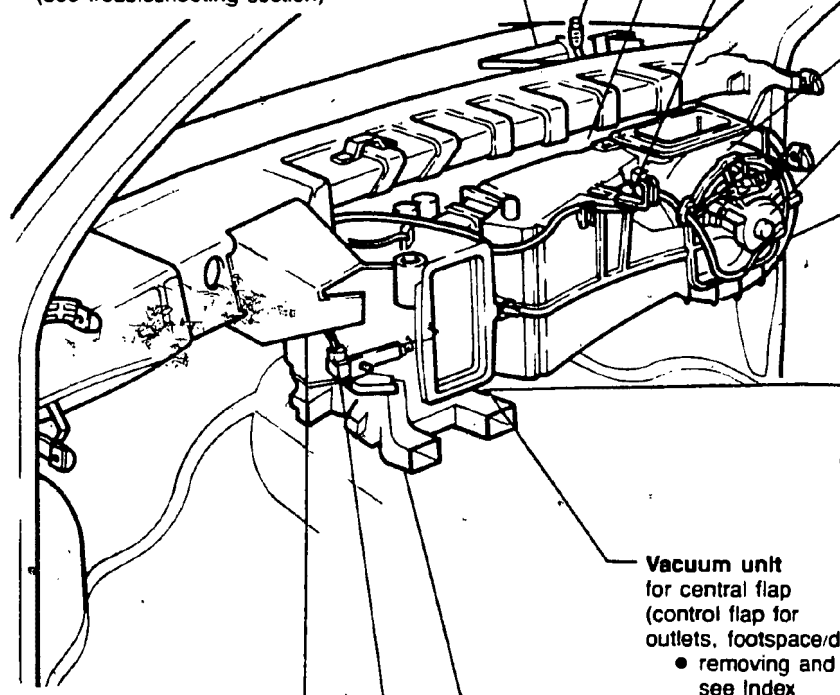

Low-pressure switch
for refrigerant system function
- installation location, removing and installing, see Index
- checking (see troubleshooting section)

Outside temperature sensor
- removing and installing remove plenum cover and glove compartment
- checking (see troubleshooting section)

Control unit
for blower motor
- removing and installing, see Index
- checking (see troubleshooting section)

Fresh air housing

Temperature sensor
(roof)
- removing and installing, see Index
- checking (see troubleshooting section)

Heater
with evaporator

Fresh air blower motor
- removing and installing, see Index

Vacuum unit
for recirculated/fresh air flap
- check installation location, vacuum unit, see Index
- vacuum hoses (with flap setting), connecting, see Index

Adjustment motor
for temperature control flap
(with feedback potentiometer)
- removing and installing, see Index
- feedback potentiometer, adjusting, see Index
- checking (see troubleshooting section)

Vacuum unit
for central flap
(control flap for outlets, footspace/defrost)
- removing and installing, see Index
- adjusting with instrument panel removed, see Index
- adjusting with instrument panel installed, see Index
- vacuum hoses (with flap setting), connecting, see Index

Vacuum unit for control flap
(footspace/defrost)
- removing and installing, see Index

Vacuum hoses
(with flap adjustment),
- connecting, see Index

Connector station
for vacuum hoses and electrical connectors for heater

Footspace outlet
- removing and installing, see Index

Note

A defective vacuum unit can only be replaced if the heater is removed.

CAUTION

Heater cannot be removed until refrigerant system is discharged.
- remove and install evaporator housing with heater as a complete unit

WARNING

Automotive refrigerant containing CFC's is hazardous to the earth's atmosphere. To protect our environment, use an Underwriter's Laboratory (UL) approved refrigerant recovery/recycling unit such as **Kent-Moore ACR³**, or equivalent, whenever discharging an A/C system.

Note

When installing fresh air housing, make sure it seats properly on plenum gasket.

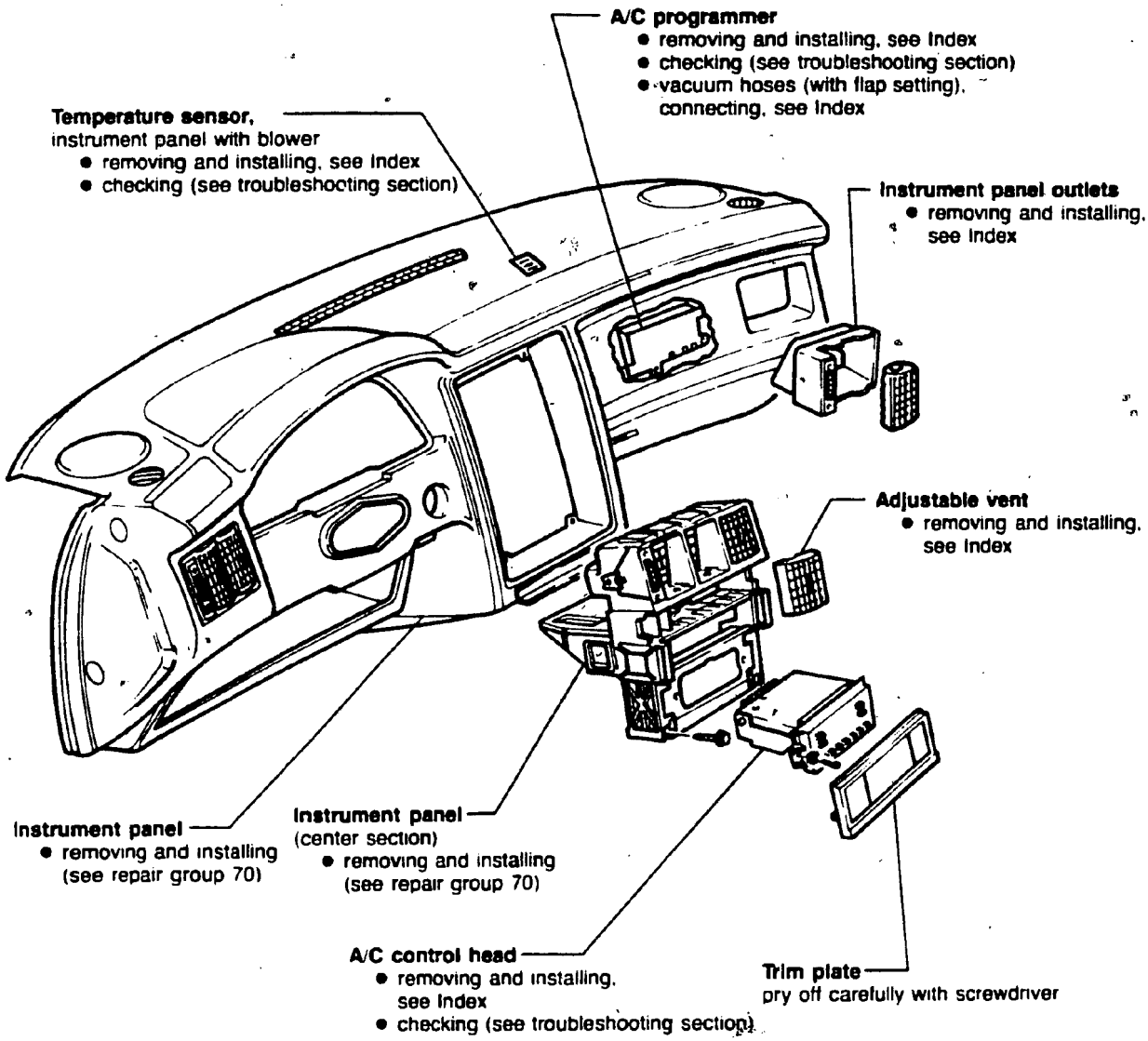

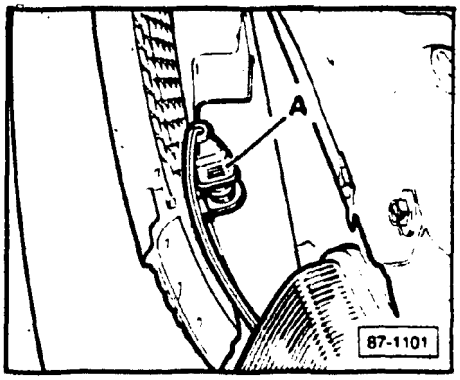

Climate control (with fault memory), repairing

Note

The following repair information describes procedures that do **NOT** affect the refrigerant system.

Outside temperature sensor

Checking (see troubleshooting section)

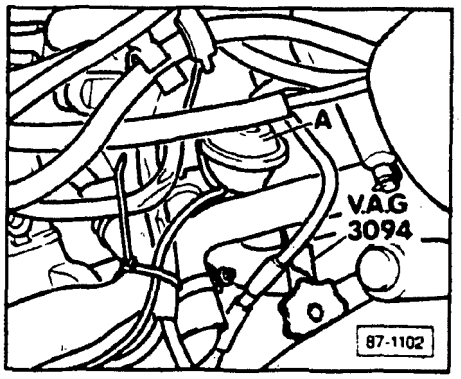

Vacuum unit and coolant check valve (for heater with coolant temperature sensor), removing and installing

- open cap on overflow reservoir
- disconnect coolant hoses
- after installing, ventilate coolant circuit according to directions (see repair group 19)
  - vacuum hoses (with flap adjustment), connecting, see Index

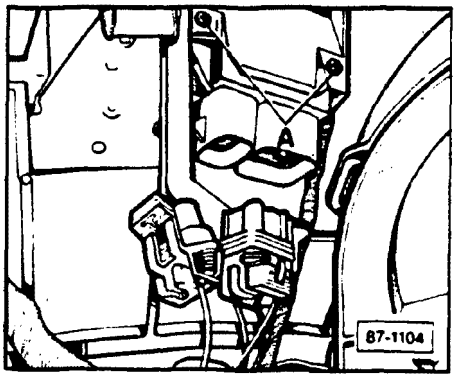

Fig. 1 **Blower motor control unit, removing and installing**

- remove glove compartment (see repair group 70)
- remove screws **A** (2)

Note

Clean old heat-conducting paste off of heat sink and control unit each time unit is removed, then apply new paste to contact surfaces.

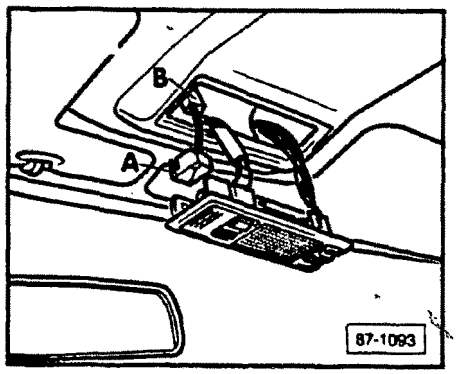

Fig. 2 Temperature sensor (roof), removing and installing

- remove interior light
- remove connector **B**
- press back clip **A**

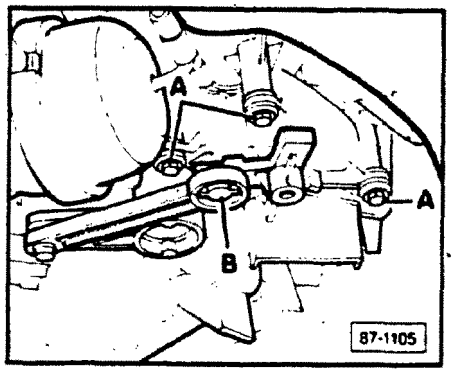

Fig. 3 Adjustment motor for temperature control flap (with feedback potentiometer), removing and installing

- remove center section of instrument panel (see repair group 70)
- remove footspace outlets, see Index
- remove screws **A** (3)
- disconnect linkage **B**
- disconnect adjustment motor harness connector at the 5-pin connector (left, on the heater)
- pull out wiring (over the heater)

When installing:
Route wiring (5-pin connector) for the new adjustment motor using the harness clip in front of the heater, making sure there is sufficient clearance for the heater lever.

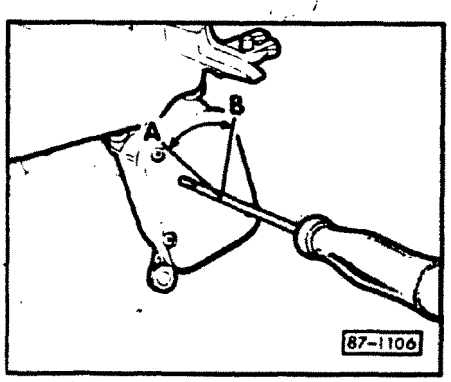

Fig. 4 Feedback potentiometer, adjusting

- remove temperature control flap adjustment motor but do not separate harness connectors
- set control head temperature to "High"
- start diagnosis on channel 8 (see troubleshooting)
  - checking: 9-14
  - adjusting: 12

Turning in direction:
A — feedback value increases
B — feedback value decreases

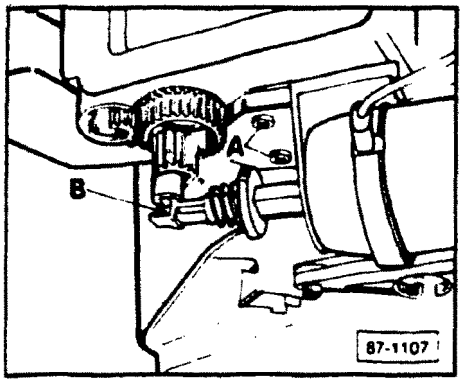

▶ **Fig. 5 Vacuum unit for central flap (control flap for footspace and defrost outlets), removing and installing**

- remove footspace outlet, see Index
- remove screws **A** (2)
- remove screw **B**

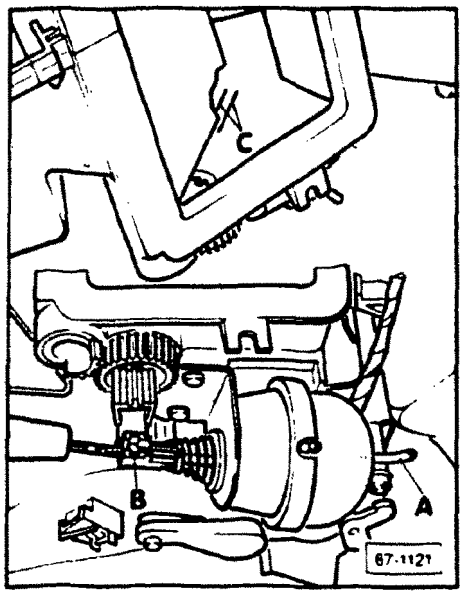

▶ **Fig. 6 Vacuum unit for central flap, adjusting (instrument panel removed)**

- apply vacuum at connection **A**
- adjust central flap setting by turning screw **B** until it is between marking **C** of the heater/fresh air housing

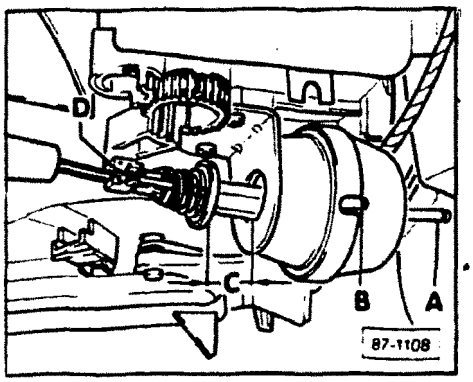

▶ **Fig. 7 Vacuum unit for central flap, adjusting (instrument panel installed)**

- remove footspace outlet, see Index
- remove vacuum hoses from connectors **A** and **B**
- adjust by turning screw **D**
  - adjustment dimension **C** = 19 mm (0.75 in.)

Vacuum hoses (with flap adjustment), connecting, see Index

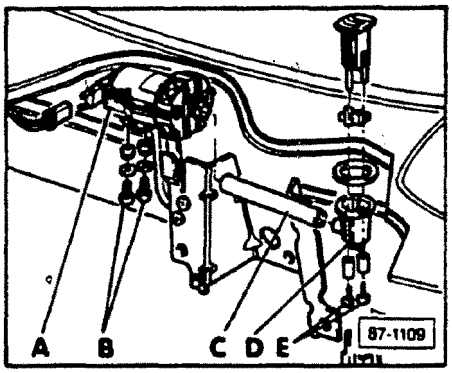

▶ **Fig. 8 Instrument panel temperature sensor (with blower), blower (A) removing and installing**

- remove glove compartment (see repair group 70)
- remove screws **B** (2)
- remove hose **C**

Temperature sensor (D) instrument panel, removing and installing

- remove glove compartment
- remove A/C programmer (see **Fig. 9**)
- remove screws **E** (2)
- remove hose **C**

> **CAUTION**
>
> Hose **C MUST** fit properly.

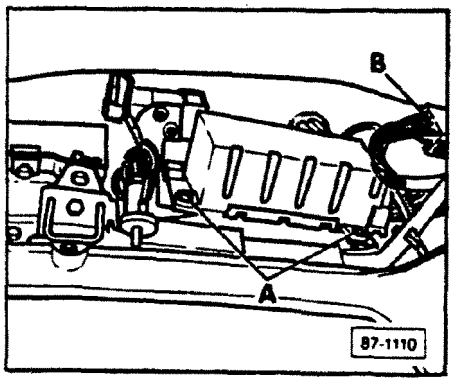

▶ **Fig. 9 A/C programmer, removing and installing**

- remove glove compartment (see repair group 70)
- remove center section of instrument panel
- remove driver's side storage compartment
- remove screws **A** (2)
- separate connector **B**
- separate connector for vacuum hoses (on heater, left)

Note

Visually inspect the connectors before making connections.

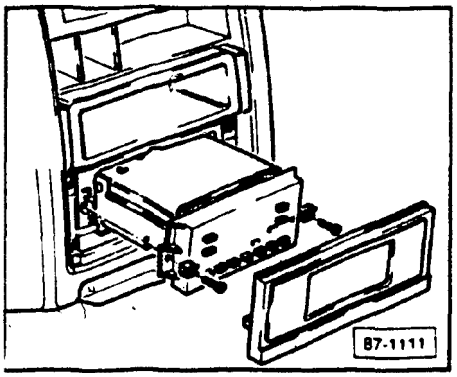

Fig. 10 A/C control head, removing and installing

- carefully pry off trim plate with a screwdriver
- remove 2 screws

Note

Visually inspect the terminals before inserting the connector.

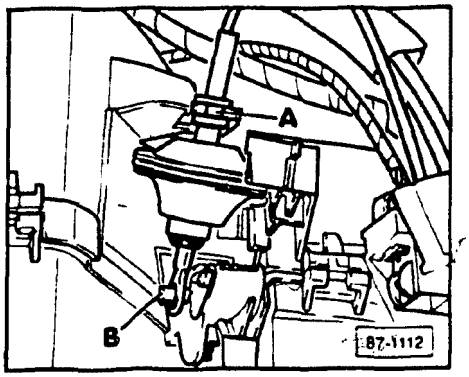

Fig. 11 Vacuum unit for control flap (foot space/ defrost), removing and installing

- remove driver's side storage compartment
- remove vacuum unit **A**
- disconnect vacuum unit at lever **B**

THIS FRAME INTENTIONALLY LEFT

BLANK

coordinate copy

Vacuum hoses (with flap adjustment), connecting

Note

The temperature control flap adjustment motor and the vacuum unit settings are program dependent.

Air leakage is permissible for all flap settings.

Checking — see troubleshooting section

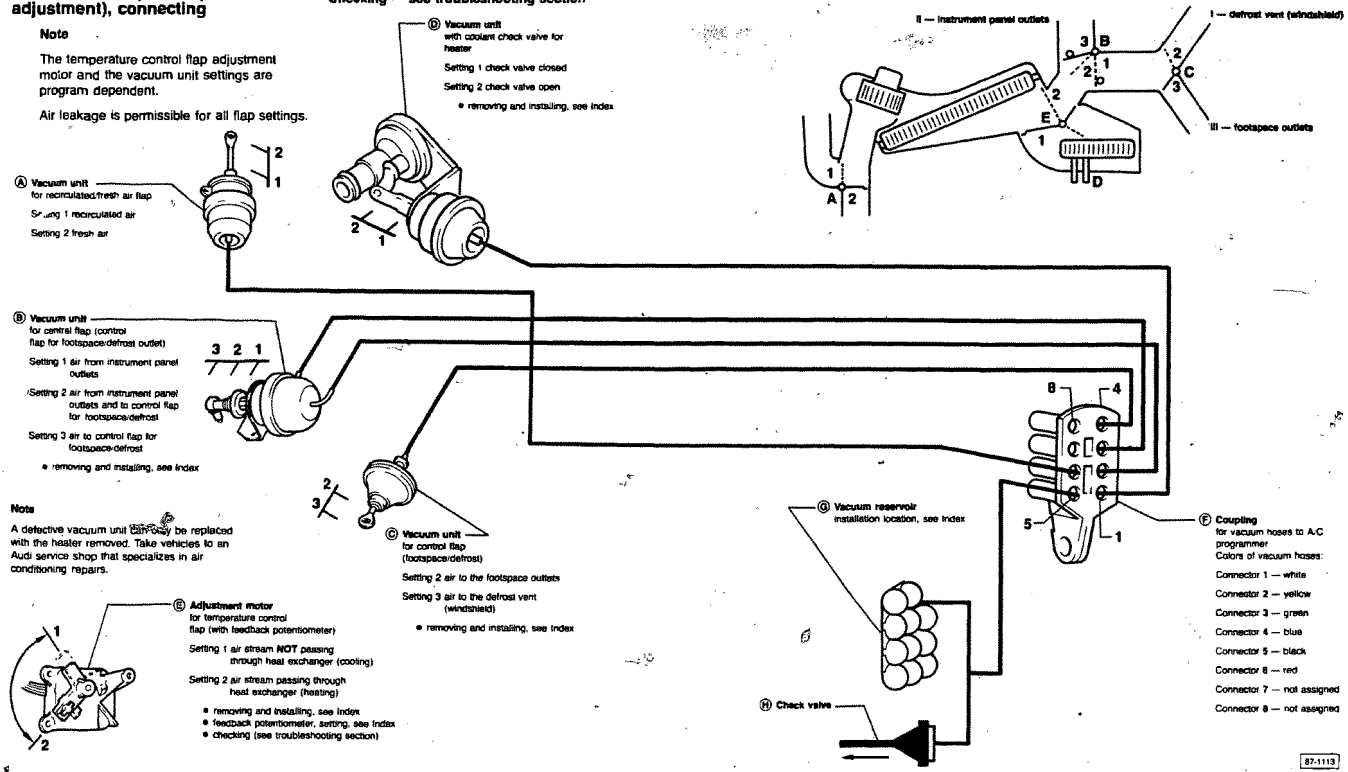

Note

A defective vacuum unit can only be replaced with the heater removed. Take vehicles to an Audi service shop that specializes in air conditioning repairs.

Index

index continues on next page

Troubleshooting

Note

When troubleshooting, go to the digital climate control quick-check first, section D8-70.

A/C compressor
- does not run in AUTO, BI-LEV or DEF modes D8-120
- runs in ECON and OFF modes D8-130

A/C control head
- is always dark D8-80
- illumination cannot be regulated D8-90
- memory display, checking D8-10
- memory loss, checking D8-110

A/C cooling performance
- checking D8-340

A/C fresh air blower
- always runs in OFF mode D8-160
- does not run in AUTO, BI-LEV or ECON modes D8-170
- speed cannot be regulated D8-180

A/C high pressure switches (F118, F23)
- checking D8-230

A/C refrigerant low pressure switch (F73)
- checking D8-270

Digital climate control
- quick check D8-70

Electrical system voltage display
- checking D8-260

Electronic thermoswitch F76 (multi-function temperature sensor)
- checking D8-300

Engine coolant temperature sensor (G62)
- checking D8-320

Errors in area of climate control
- regulation D8-220

Fault memory
- cannot be initiated D8-100

Idle speed increase (A/C ON)
- checking D8-330

Inside temperature sensors (G56, G86)
- checking D8-310

Kick-down function (from 1991 m.y.)
★ - checking D8-290

Kick-down switch, F46 (through 1990 m.y.)
- checking D8-280

Memory channel 1
- error display D8-30

Memory display
- channels 1-22 D8-20
- channel 7, checking D8-40
- channel 17, checking D8-50
- channel 18, checking D8-60

Outside temperature
- cannot be displayed D8-100

cardiagn.com

Index

Troubleshooting

Note

When troubleshooting, go to the digital climate control quick-check first, section D8-70 .

Outside temperature sensors (G57, G17)
- checking D8-240

Radiator cooling fan
- does not run at 1st speed in AUTO, BI-LEV and DEF modes D8-140
- always runs at 1st speed in ECON and OFF modes D8-150

RPM increase (compressor ON)
- checking D8-330

Speed dependent blower control
- checking D8-250

Temperature regulating flap servo motor, V68 (with feedback potentiometer)
- checking D8-190

Vacuum units/flap positions
- checking D8-210
- identification D8-200

cardiagn.com

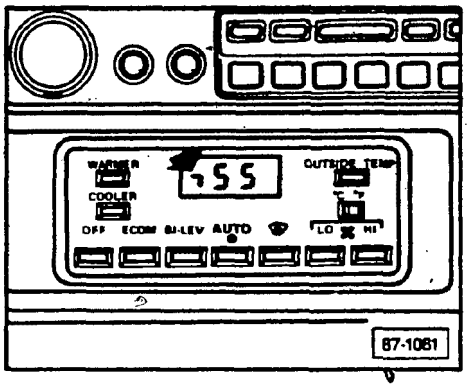

A/C control head memory display, checking

Twenty-two diagnostic channels are available for information output on the A/C control head display.

- For diagnostic values greater than 199, the first digit 2 is represented as a horizontal and vertical line (**arrow**)

For example, 255 is shown on illustration.

Note

While information is being displayed on A/C control head, the A/C system will run in the last selected mode.

Starting display

- switch ignition **ON**
- push and hold down **OUTSIDE TEMP** button
- push and hold down **OFF** button
- release **OUTSIDE TEMP** button then release **OFF** button

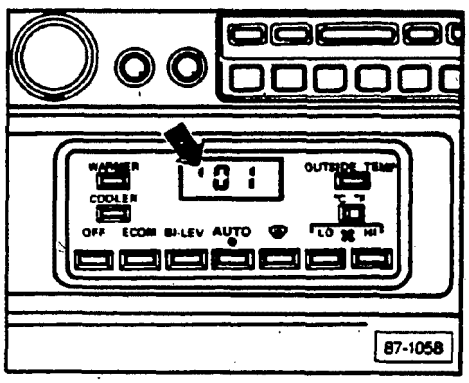

Note

A vertical line in the first field (**arrow**) lights up to indicate the channel number.

To select a different channel
- press **WARMER** button to advance channel by one
- press **COOLER** button to decrease channel by one

To call up information about a particular channel
- select desired channel
- press **OUTSIDE TEMP** button

To leave the memory display
- select any A/C operating mode, or switch ignition to **OFF**

cardiagn.com

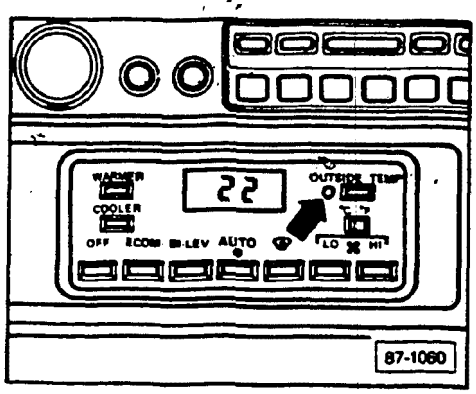

Note

Some faults are displayed without having to start the memory fault sequence.

If a problem develops that affects temperature regulation, the ambient temperature light (**arrow**) will flash for about one minute each time the ignition is switched **ON** or when the fault first happens.

The following faults will cause the ambient temperature light to flash:

- one or both inside temperature sensors is transmitting incorrect values.
- both outside temperature sensors are transmitting incorrect values.
- the feedback potentiometer on the temperature regulating flap is supplying incorrect values or the adjustment motor is not properly adjusted.
- the A/C refrigerant high pressure switch **F118** (red housing) has switched the A/C compressor **OFF** eight times in the last driving period. (This fault can be erased by depressing the **OFF** button or by cycling ignition switch.

cardiagn.com

Memory display, channels 1-22

Diagnostic channel no.	Display	Specified display
1	System error	00 = no system error 09 = coolant temperature sensor — interruption Displayed system errors — see Section D8-30 **Note** Coolant temperature sensor will be phased in during production.
2	Measurement value of inside temperature sensor **G86** on roof	Depends on temperature — see table, Section D8-310
3	Measurement value of inside temperature sensor **G56** on instrument panel	
4	Measurement value of outside temperature sensor **G57** (plenum)	Depends on temperature — see table, Section D8-240
5	Measurement value of outside temperature sensor **G17** — cowl	
6	Measurement value of coolant temperature sensor **G62** **Note** Will be phased in during production.	Depends on temperature — see table, Section D8-320 **Note** Display value for vehicles without coolant temperature sensor 255 = open circuit
7	Graphic display of output control information for A/C programmer	Depends on program — see Section D8-40

cardiagn.com

Diagnostic channel no.	Display	Specified display
8	Actual value of feedback potentiometer on temperature regulating flap servo motor, **V68**	Depends on program — A numerical value for the position of the servo motor is shown
9	Specified value of feedback potentiometer on temperature regulating flap servo motor, **V68**	Depends on program Only check when the value in channel 8 is between 30 and 200. Actual servo motor position (channel 8) and specified servo motor position (channel 9) must not differ by more than 3. If difference is greater than 3, ■ adjust feedback potentiometer, see Repair Group **87** ● specified value: **9-14**
10	Specified voltage on fresh air blower **V2** (coded)	Depends on program **Note** Specified voltage in volts. ■ see diagnostic channel no. 15
11	Vehicle electrical system voltage	Depends on instantaneous operating condition greater than 9.5 volts
12	Total of electrical system voltage interruptions — values between 5 and 9.5V **Note** Values less than 5 volts are recognized as an open low-pressure switch.	Depends on running performance since display was last erased **Note** Erase (for example, by disconnecting the battery).
13	Program number	No determination, is of no significance for troubleshooting
14	Switch position of high-pressure switch **F118** (red housing)	0-5 (high-pressure switch closed)
15	Specified voltage on fresh air blower **V2** in volts	Depends on program

cardiagn.com

Diagnostic channel no.	Display	Specified display
16	Pulse counter	Of no significance for troubleshooting. (counts from 0-256)
17	Graphic display of compressor shut-off conditions	Depends on program — see Section D8-50
18	Graphic display of electrical outputs	Depends on program — see Section D8-60
19	Number of times compressor shut off via high-pressure switch **F118** (red housing)	Depends on running performance since display was last reset **Note** Reset (for example, by disconnecting the battery).
20	Number of times compressor shut off via high-pressure switch **F118** (red housing) since last ignition switch cycle or reset from **OFF** button	0 **Note** After 8th shut-off during a driving period, the compressor does not switch on again.
21	Program number	Of no significance for troubleshooting
22	Speed signal **Note** At high vehicle speeds fresh air blower speed is limited in "Fresh Air" mode.	00 when vehicle stopped 01 or greater dependent on vehicle speed

cardiagn.com

Errors displayed on memory channel 1

Error code	Error code	Correction of error
00	No error recognized	
01	Inside temperature sensor **G56** (instrument panel), open circuit	■ check affected component and related wiring according to wiring diagram
02	Inside temperature sensor **G56** (instrument panel), short-circuit	
03	Outside temperature sensor **G57** (plenum), open circuit	
04	Outside temperature sensor **G57** (plenum), short circuit	
05	Outside temperature sensor **G17** (cowl), open circuit	
06	Outside temperature sensor **G17** (cowl), short circuit	
07	Feedback potentiometer on adjustment motor for temperature regulating flap, **V68** interruption/open	■ check temperature regulating flap servo motor **V68** (with feedback potentiometer), Section D8-190
08	Feedback potentiometer on adjustment motor for temperature regulating flap, **V68** short circuit	
09	Coolant temperature sensor **G62**, open circuit	■ check coolant temperature sensor **G62** and its wiring according to diagram **Note** Coolant temperature sensor will be phased in during production.
10	Coolant temperature sensor **G62**, short circuit	

cardiagn.com

Error code number	Error code	Correction of error
11	Inside temperature sensor **G68** (roof), open circuit	■ check inside temperature sensor (roof) and its wiring according to wiring diagram
12	Inside temperature sensor **G68** (roof), short circuit	
13	Electrical system voltage is or was once less than 9.5 V but greater than 5 V during the current driving period **Note** Values less than 5 V are recognized as an open low-pressure switch.	■ check electrical system voltage display, Section D8-260
14	Compressor off; high-pressure switch **F118** (red housing) cycled 8 times	■ check high-pressure switch **F118** (red housing), Section D8-230
15	Adjustment motor for temperature regulating flap **V68** (with feedback potentiometer) is set improperly	■ check temperature regulating flap servo motor **V68** (with feedback potentiometer), Section D8-190
16	High-pressure switch **F118** has open circuit or cycled at least 1 time during current driving period	■ check high-pressure switch **F118** (red housing) and its wiring according to wiring diagram

cardiagn.com

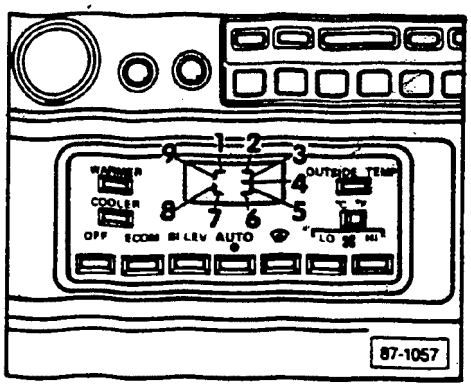

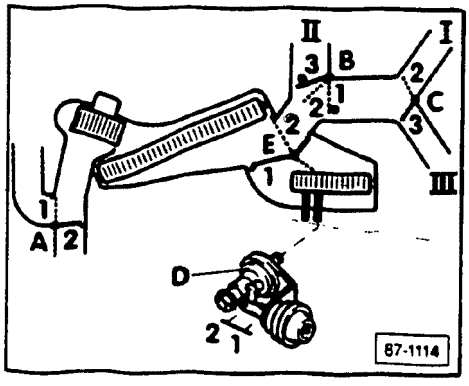

Memory display channel 7, checking

This channel displays the control information to the A/C programmer.

Segment 1 lights or flashes
Temperature regulating flap **E** moves in direction **2** "heating," see Section D8-60

Segment 2 lights
Recirculation/fresh air flap **A** is in position **2** "recirculation mode."

Segments 3 and 5 light up
Regulating flap **B** (footwell/defrost outlet) is in position **1** "air from instrument panel outlets."

Segment 4 lights up
Heater valve **D** is in position **1** (closed).

Segment 5 lights up
(segment 3 does not light up)
Regulating flap **B** (outlets for footwell/defrost) is in position **2** "air from instrument panel outlets and to regulating flap (footwell/defrost)."

Segment 6 lights up
Regulating flap **C** (footwell/defrost) is in position **2** "air from footwell outlets."

Segment 7 lights up or flashes
Temperature regulating flap **E** moves in direction **1** "cooling," see Section D8-60

Segment 8 lights up
Compressor on.

Segment 9 lights up
Radiator cooling fan runs on 1st speed.

cardiagn.com

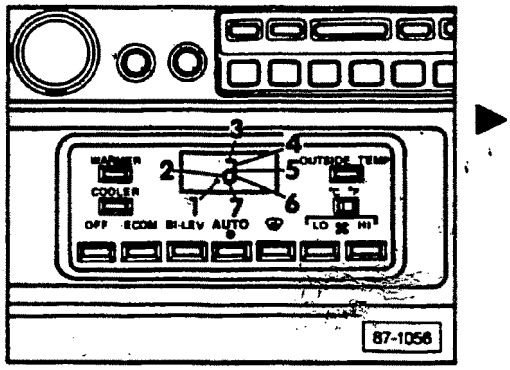

Memory display channel 17, checking

Segment 1 lights up
Compressor on.

Segment 2 lights up
Compressor off. A/C refrigerant high-pressure switch **F118** (red housing) open.

Segment 3 lights up
Compressor off. Outside temperature too low or operating mode set to **ECON** or **OFF**. Check outside temperature sensors, see Section D8-240

Segment 4 lights up
Compressor off. Electrical system voltage less than 9.5V. See Section D8-260.

Segment 5 lights up
Compressor off. A/C refrigerant low-pressure switch **F73** open. See Section D8-270.

Segment 6 lights up
Compressor off. Kick-down switch **F46** closed. See Section D8-280 (through 1990 m.y.) or Section D8-290 (from 1991 m.y.)

Note
A/C compressor switches back on after 12 seconds.

Segment 7 lights up
Compressor off. Electronic thermoswitch (multi-function temperature sensor), **F76** closed. See Section D8-300.

cardiagn.com

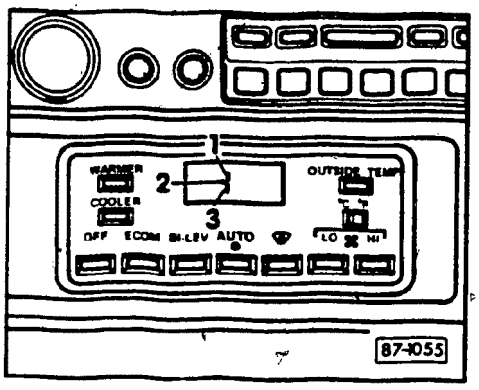

Memory display channel 18, checking

Segment 1 lights
Compressor on.

Segment 2 lights
Radiator cooling fan runs on 1st speed.

Segment 3 lights
Idle speed increases (A/C on).

Note

Idle speed increase does not apply to all vehicles. See Section D8-330.

Temperature regulating flap, positions

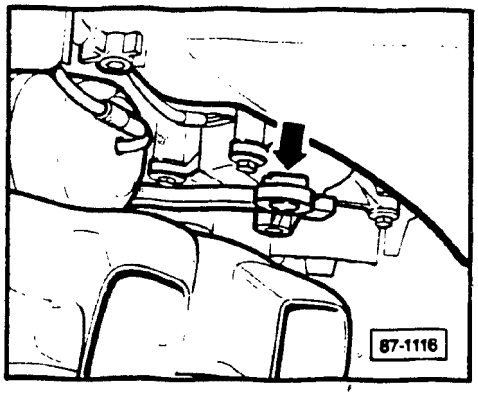

Fig. 1 Cooling position

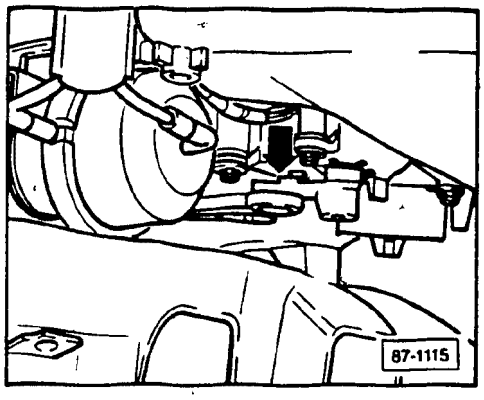

Fig. 2 Heating position

cardiagn.com

Digital climate control, quick check

Note

The test steps listed must be followed in their entirety and in sequence.

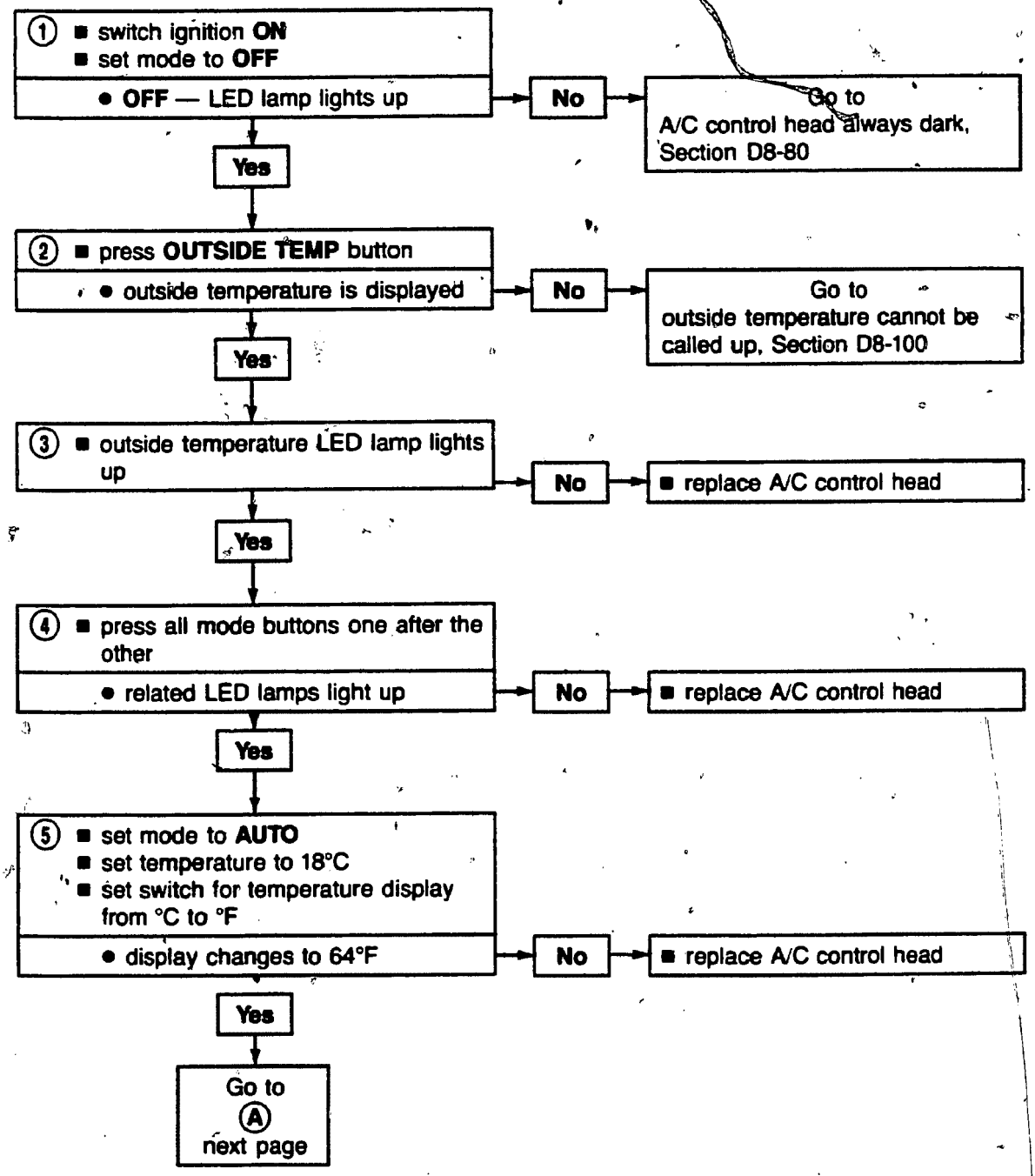

cardiagn.com

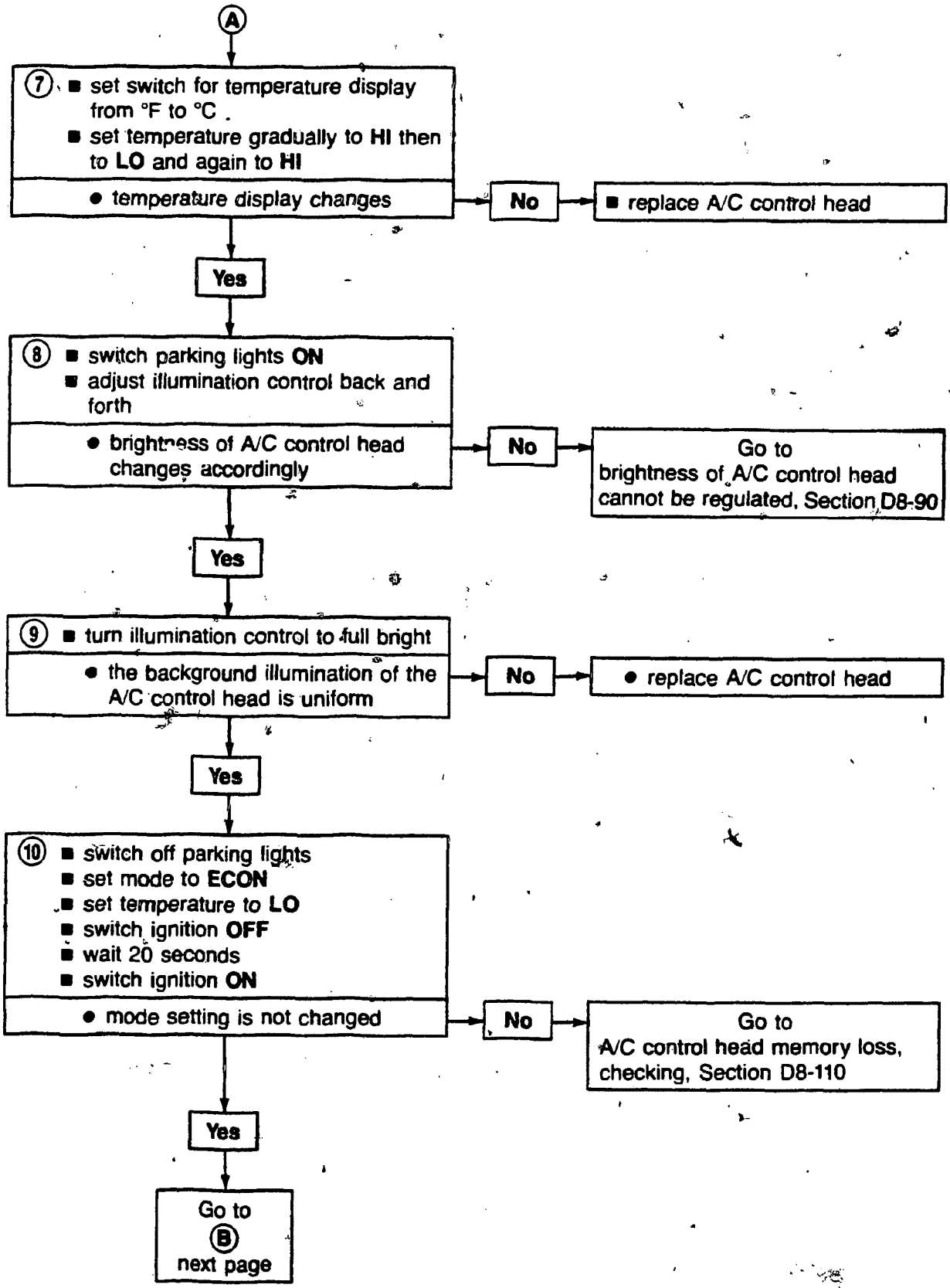

cardiagn.com

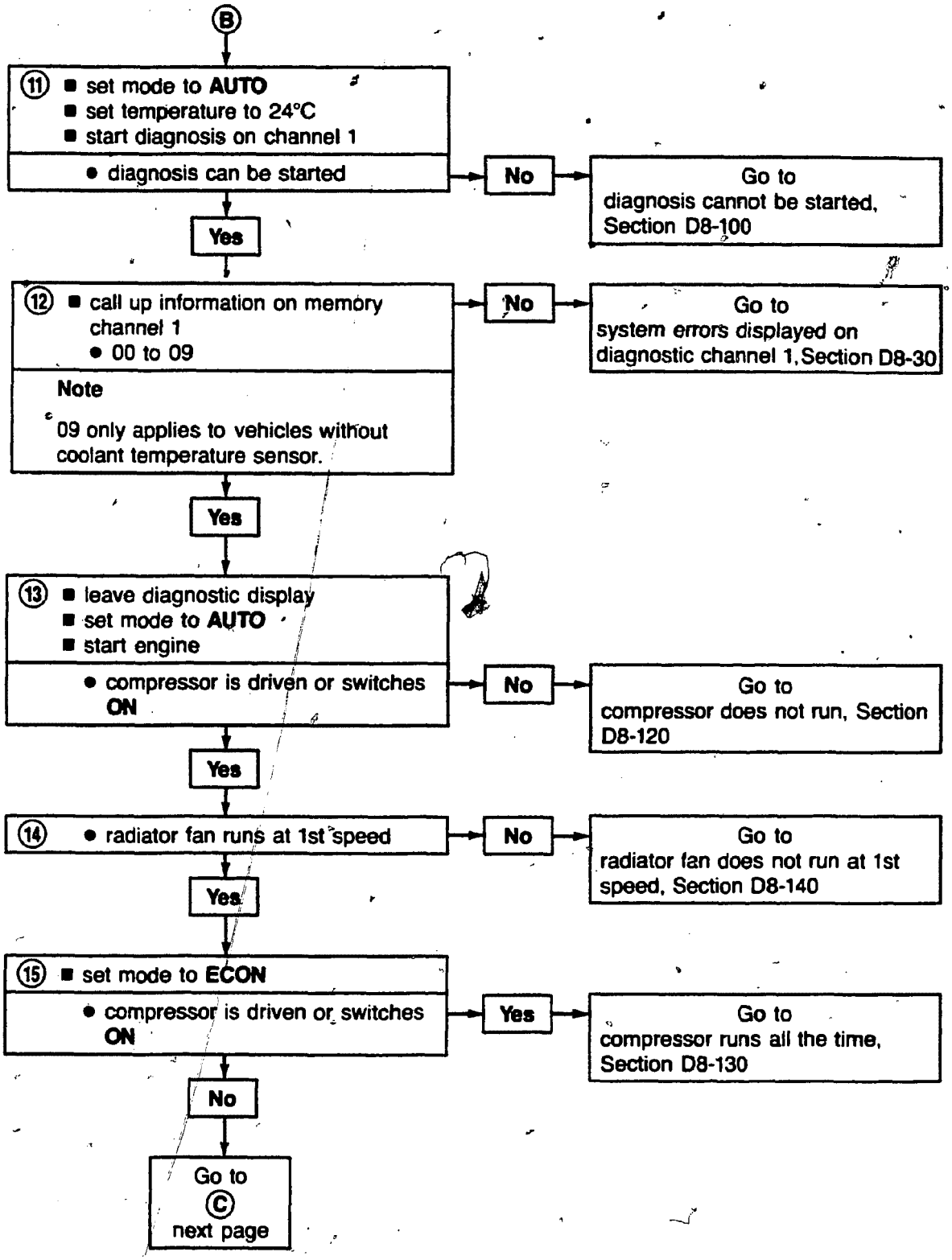

cardiagn.com

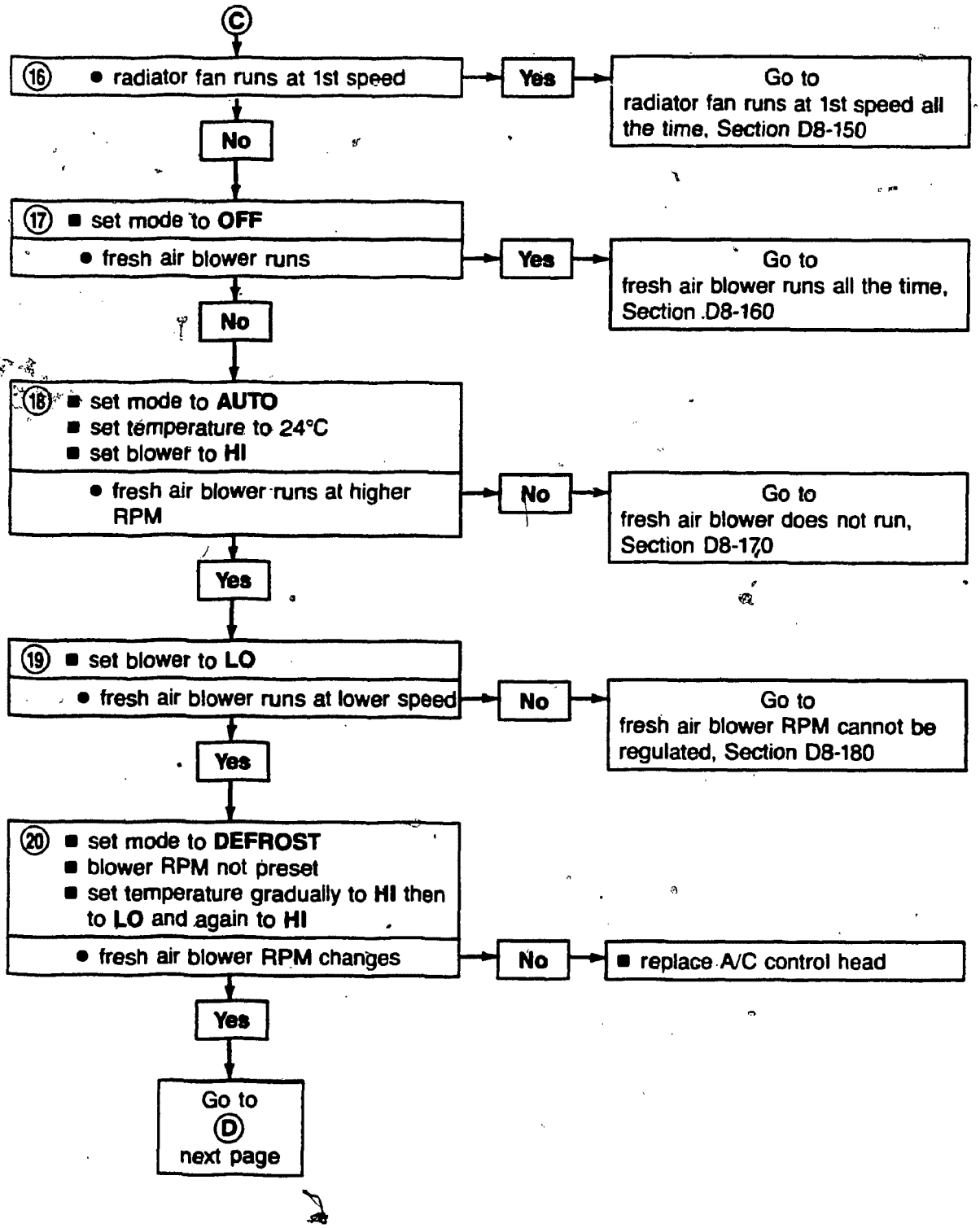

cardiagn.com

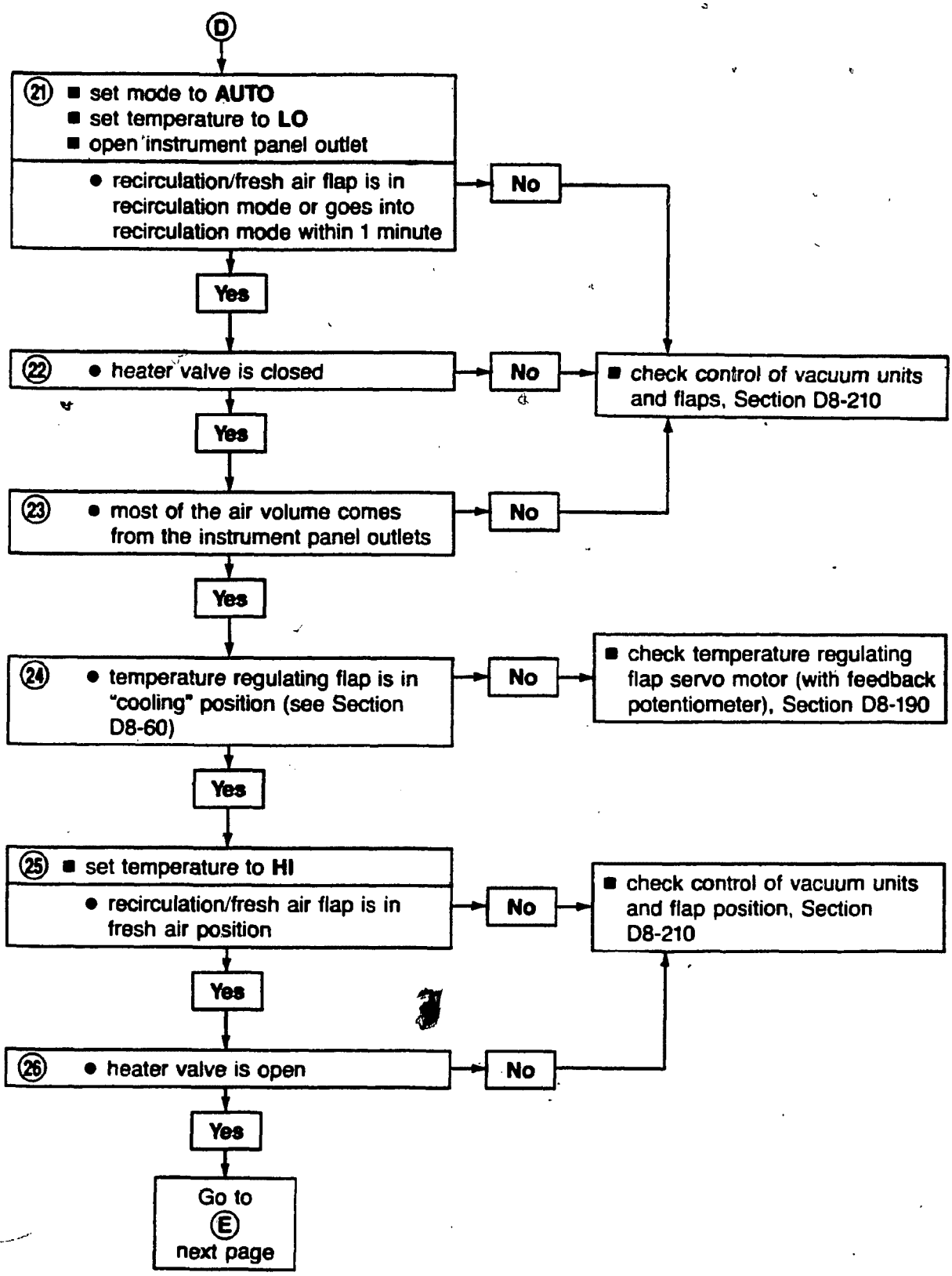

cardiagn.com

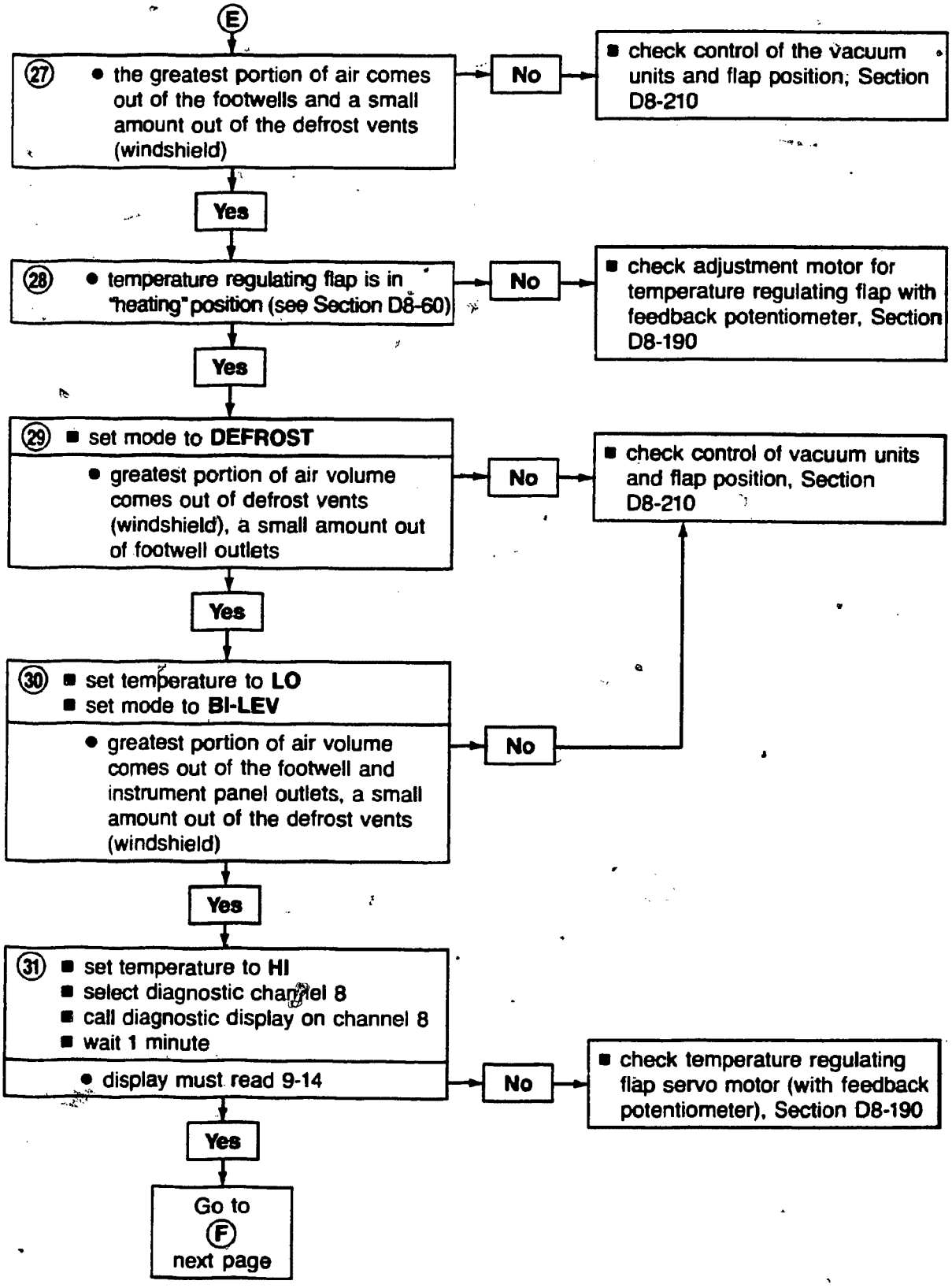

cardiagn.com

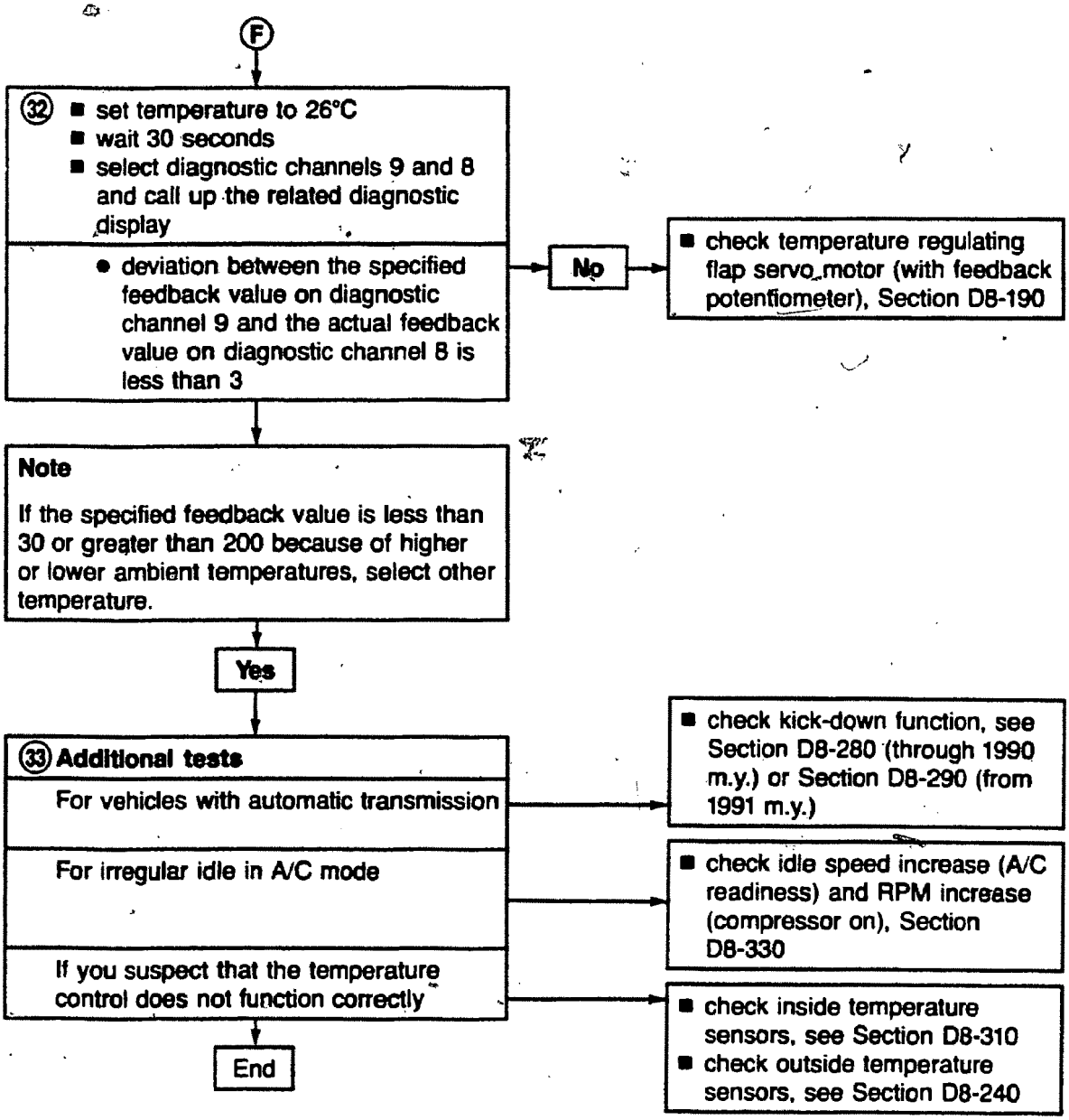

cardiagn.com

A/C control head, is always dark

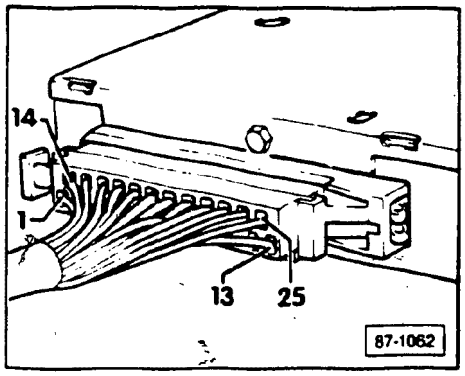

- switch ignition **ON**
- switch parking lights **OFF**
- measure voltage between cavities **25** and **7** on A/C control head connector

• less than 8V	• greater than 8V

- repair voltage supply for cavity **25** or ground connection of cavity **7** to A/C control head according to wiring diagram

End

- measure voltage between cavities **13** and **7** on A/C control head connector

• greater than 8V	• less than 8V

- remove A/C control head connector
- measure voltage between cavities **13** and **7** on connector

• greater than 8V	• less than 8V

- replace A/C control head

End

- replace A/C control head

End

- repair short circuit in wiring to cavity **13** according to wiring diagram

End

cardiagn.com

A/C control head illumination, cannot be regulated

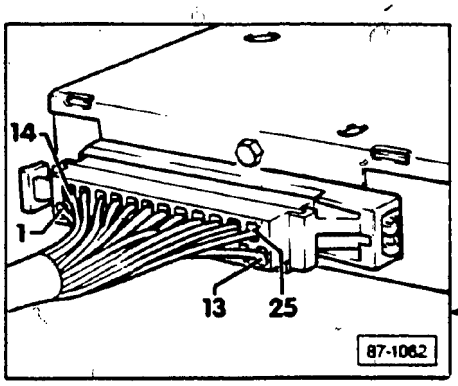

- switch ignition **ON**
- set mode to **AUTO**
- set temperature to 24°C
- switch parking lights **ON**
- turn illumination control to full bright
- measure voltage between cavities **25** and **7** on A/C control head connector

• less than 8V	• greater than 8V

- repair voltage supply from cavities **25** or ground connection from cavity **7** according to wiring diagram

End

- measure voltage between cavities **24** and **7** on A/C control head connector

• less than 8V	• greater than 8V

- repair voltage supply to cavity **24** according to wiring diagram

End

- measure voltage between cavities **13** and **7** on A/C control head connector

• less than 8V	• greater than 8V

Go to Ⓐ next page

- repair voltage supply to cavity **13** according to wiring diagram

End

cardiagn.com

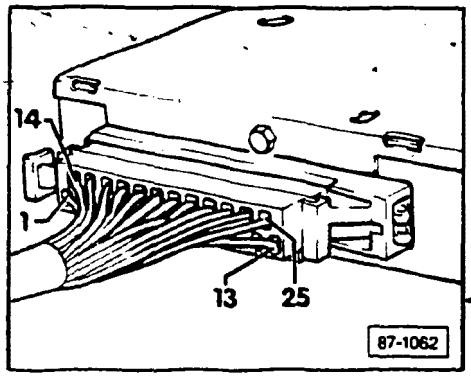

(A)

- turn illumination control to full bright
- measure voltage between cavities **24** and **7** on A/C control head connector

• less than 6V	• greater than 6V

- replace A/C control head

End

- remove A/C control head connector
- measure voltage between cavities **24** and **7** on connector

• less than 6V	• greater than 6V

- replace A/C control head

End

- eliminate short circuit in wiring to cavity **24** according to wiring diagram

End

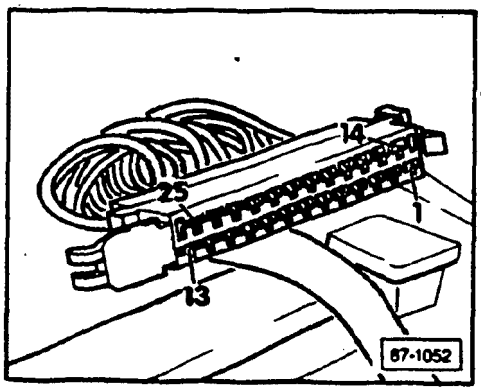

cardiagn.com

CONTINUED IN THE

BEGINNING OF NEXT ROW

cardiagn.com

Fault memory cannot be initiated/ outside temperature cannot be displayed

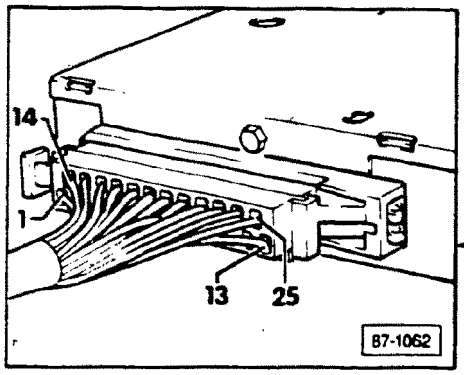

- switch ignition **ON**
- measure voltage between cavities **25** and **7** on A/C control head connector

• less than 8V	• greater than 8V

- repair voltage supply from cavities **25** or ground connection from cavity **7** according to wiring diagram

End

- measure voltage between cavities **11** and **7**

• greater than 6V less than 4.7V	• greater than 4.7V less than 6V

Go to section D8-220

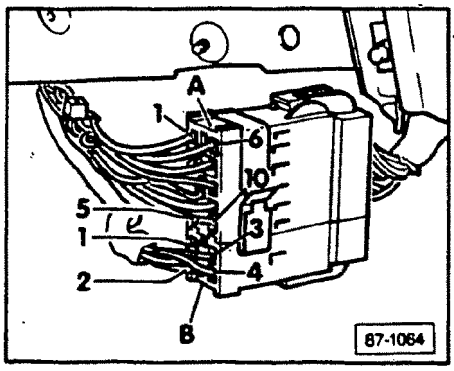

- remove connector to A/C programmer
  - troubleshooting can be initiated
  - outside temperature can be called up

Yes	No
Go to Ⓐ next page	Go to Ⓑ pages following

cardiagn.com

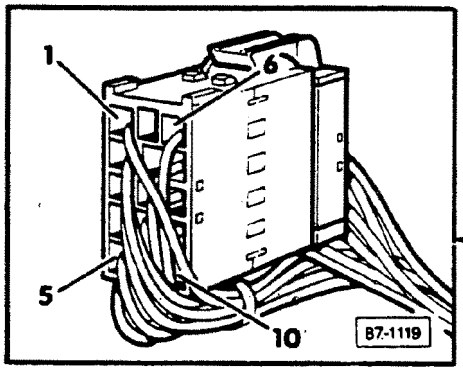

(A)

- reconnect connector
- measure voltage on connector between cavities **4** and **7**

• less than 8V	• greater than 8V

- repair voltage supply to cavity **4** or ground connection from cavity **7** connector **A** according to wiring diagram

End

- check wiring between connector **A** cavities **8, 9, 10** and cavities **10, 21, 22** of A/C control head connector for open or shorted circuits using wiring diagram

• wiring **OK**

Yes	No
• replace A/C programmer	• repair as necessary
End	End

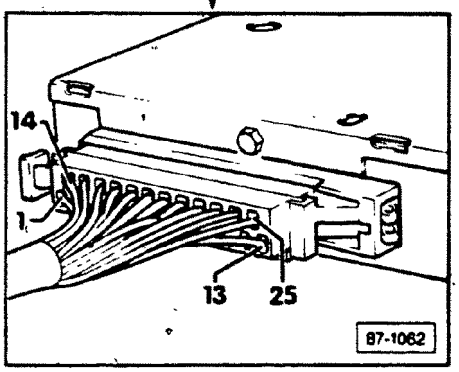

cardiagn.com

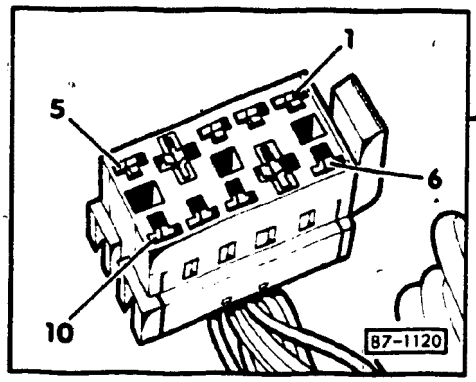

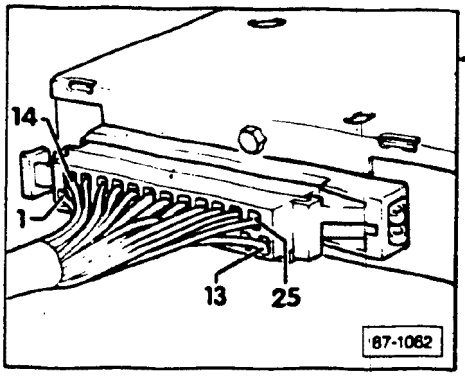

(B)

- check wiring between connector **A** to A/C programmer cavities **8, 9, 10** and A/C control head cavities **10, 21, 22** for short or open circuits using wiring diagrams

- wiring **OK**

Yes	No
■ replace A/C control head → End	■ repair wiring as necessary → End

cardiagn.com

A/C control head memory loss, checking

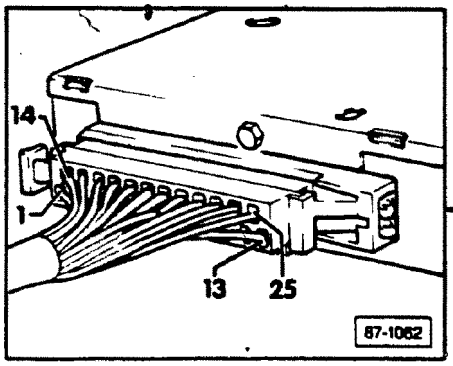

- switch ignition **OFF**
- measure voltage between cavities **12** and **7** on A/C control head connector

• less than 8V	• greater than 8V

- repair voltage supply to cavity **12** or ground connection to cavity **7** according to wiring diagram

End

- replace A/C control head

End

cardiagn.com

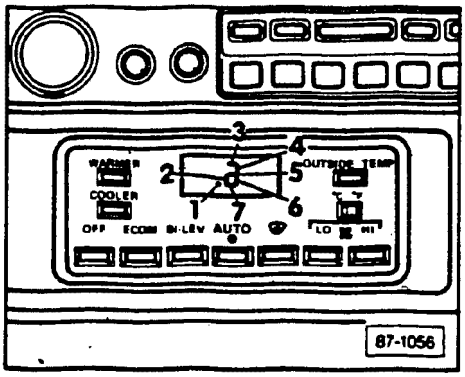

Compressor does not run in AUTO, BI-LEV and DEF modes

- switch ignition **ON**
- set mode to **AUTO**
- set temperature to 24°C
- start diagnosis on channel 17

- segment **1** (compressor on) lights up

No	Yes
	→ Go to Ⓐ next page

- segment **2** (high-pressure switch) lights up → Go to section D8-230
- segment **3** (low outside temperature or mode set to **ECON** or **OFF**) → Go to section D8-240
- segment **4** (electrical system voltage too low 5-9.5V) lights up → Go to section D8-260
- segment **5** (low-pressure switch) lights up → Go to section D8-270
- segment **6** (kick-down switch) lights up → Go to section D8-280 (through 1990 m.y.) or section D8-290 (from 1991 m.y.)
- segment **7** (hot light switch) lights up → Go to section D8-300
- none of the segments **1-7** lights up → Go to section D8-300

- replace A/C control head

End

cardiagn.com

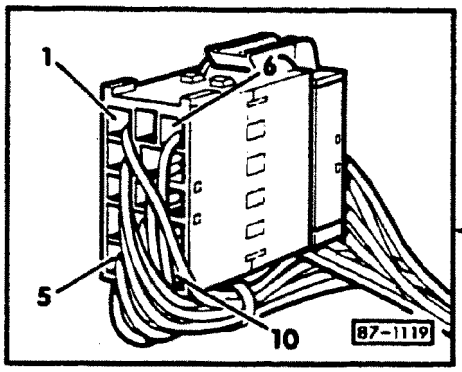

(A)

■ measure voltage between cavities 5 and 7 at A/C programmer connector A

● less than 1.5V	● greater than 1.5V

■ disconnect wire at terminal 4/87a of relay J 32
■ start engine
■ observe; compressor runs

Yes	No

■ measure current draw between terminal connection at 4/87a of J 32

greater than 5 mA	less than 5 mA

Fault not in A/C circuit. Check engine electronics.

Replace relay J 32

■ check following components and wiring per wiring diagram
- A/C relay, J 32
- A/C compressor clutch, N 25

■ check wiring from A/C programmer connector cavity 5 to A/C relay for short circuit according to wiring diagram
● wiring OK

Yes	No

Go to section D8-220

■ repair as necessary

End

cardiagn.com

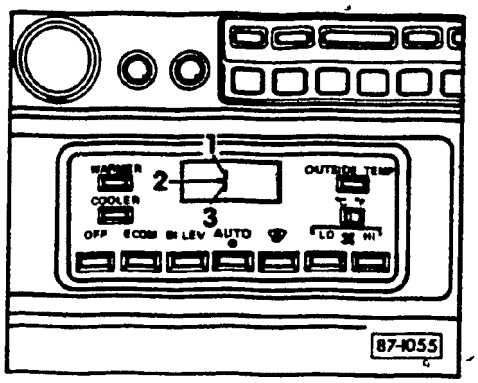

Compressor runs in ECON and OFF modes

- switch ignition **ON**
- set mode to **ECON**
- set temperature to 24°C
- start diagnosis on channel 18

- segment 1 (compressor on) lights up

Yes → replace A/C control head → End

No →

- separate connector to A/C programmer
- start engine

- compressor runs

Yes →

- check the following components and their wiring according to wiring diagram:

- A/C relay, **J32**
- A/C compressor clutch, **N25**

→ End

No →

- reconnect connector

→ Go to section D8-220

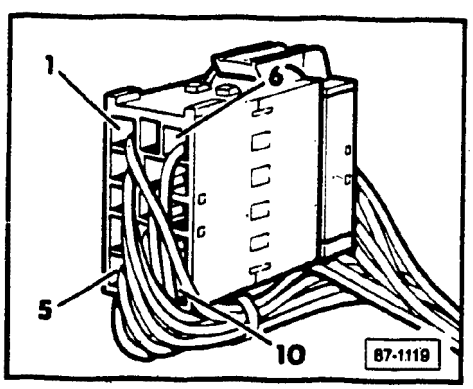

cardiagn.com

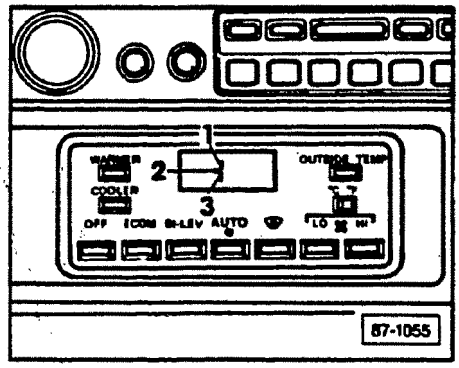

Radiator cooling fan, V7 does not run at 1st speed (in AUTO, BI-LEV, AND DEF modes)

- switch ignition **ON**
- set mode to **AUTO**
- set temperature to 24°C
- start diagnosis on channel 18

- segment **2** (radiator fan, 1st speed on) lights up

No	Yes

No → ■ replace A/C control head → End

Yes →

- measure voltage between cavities **3** and **7** on connector to A/C programmer

• less than 1.5V	• greater than 1.5V

less than 1.5V →

- check the following components and their wiring according to wiring diagram:
  - series resistor for radiator cooling fan, **N39**
  - radiator cooling fan, **V7**
  - radiator cooling fan after-run control unit, **J138** or **J26**

→ End

greater than 1.5V →

- check wiring from A/C programmer connector **A** cavity **3** to radiator cooling fan after-run control unit **J138** or **J26** using wiring diagram

- wiring **OK**

Yes	No

Yes → Go to section D8-220

No → ■ repair as necessary → End

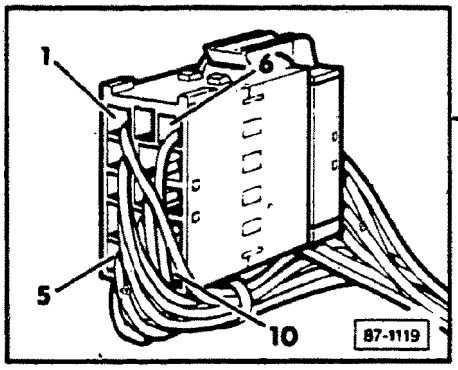

cardiagn.com

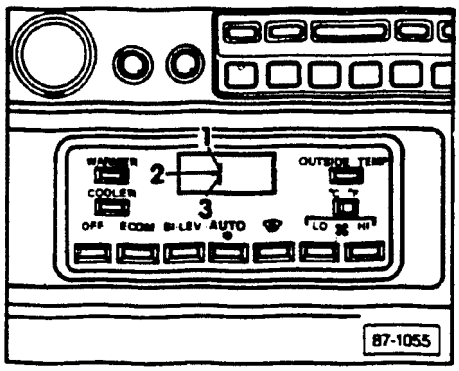

Radiator cooling fan, V7 always runs at 1st speed (in ECON and OFF modes)

- switch ignition **ON**
- set mode to **ECON**
- set temperature to 24°C
- start diagnosis on channel 18

- segment 2 (fan on 1st speed) lights up

Yes → replace A/C control head → End

No →

- separate connector to A/C control head

- fan continues to run at 1st speed

No → reconnect connector → Go to section D8-220

Yes →

- check the following components and their wiring according to wiring diagram

- radiator cooling fan series resistor, **N39**
- radiator cooling fan, **V7**
- radiator cooling fan after-run control unit **J138** or **J26** and thermoswitch **F95**

→ End

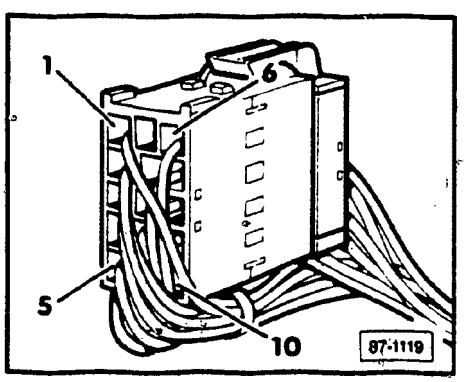

cardiagn.com

A/C fresh air blower always runs (in OFF mode)

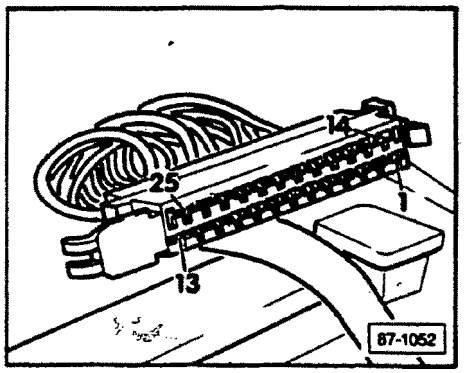

- switch ignition **ON**
- remove connector from A/C control head
- fresh air blower continues to run

No	Yes

No → measure voltage between cavities **25** and **7** on A/C control head connector

• greater than 8 V	• less than 8 V

- greater than 8 V → replace A/C control head → End
- less than 8 V → repair voltage supply from cavity **25** or ground connection from cavity **7** according to wiring diagram → End

Yes → remove both connectors from A/C blower control unit, **J126**

- fresh air blower runs

Yes	No

Yes → repair short circuit in wiring from A/C blower control unit to fresh air blower according to wiring diagram → End

No → check wiring from A/C control head connector cavity **15** to blower control unit for short circuit according to wiring diagram

No	Yes
replace control unit for blower → End	repair as necessary → End

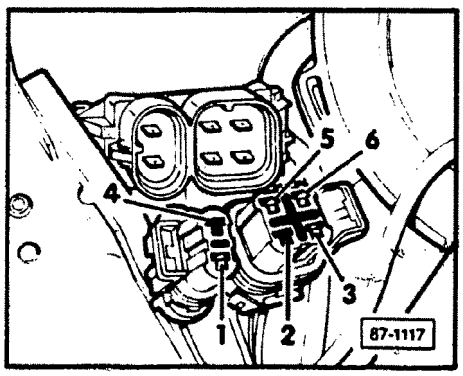

cardiagn.com

Fresh air blower does not run (in AUTO, BI-LEV, DEF or ECON modes)

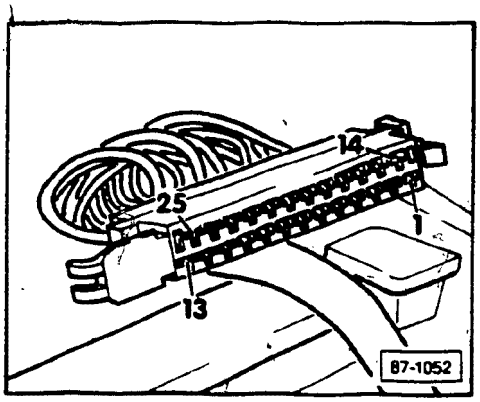

- switch ignition **ON**
- remove connector from A/C control head
- bridge cavities **15** and **25** with LED test lamp

- fresh air blower runs

Yes	No

Yes:

- check wiring from A/C control head connector cavity **14** to A/C blower control unit for short circuit according to wiring diagram

Yes	No

Yes:

- repair as necessary

End

No:

- replace A/C control head

End

No:

- reconnect A/C control head connector
- set mode to **AUTO**
- set temperature to **LO**
- set blower to **HI**
- remove both connectors from blower control unit, **J26**
- bridge cavities **6** and **5** with LED tester **US 1115** (VAG 1527B)

- LED tester lights up

Yes	No

Yes:

Go to Ⓐ next page

No:

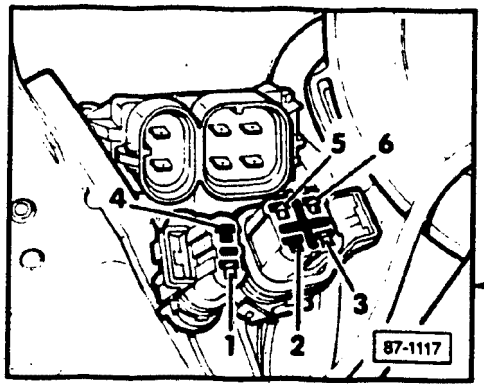

- repair break in wiring to A/C blower control unit cavity **5** or **6** according to wiring diagram

End

cardiagn.com

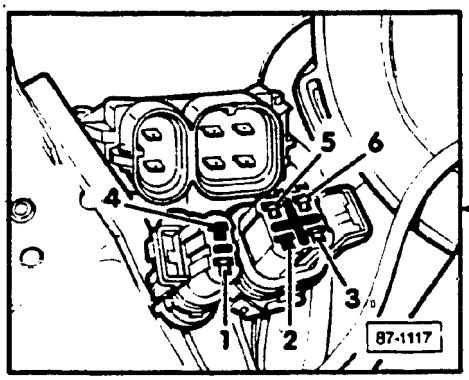

(A)

- bridge cavities **1** and **3** of A/C blower control unit
- fresh air blower runs

Yes	No

Yes → ■ replace A/C blower control unit → End

No →

- measure voltage between cavities **1** and **5** on A/C blower control unit connector

• greater than 8V	• less than 8V

greater than 8V →

- check wiring from A/C blower control unit connector to fresh air blower and ground connection from fresh air blower according to wiring diagram
- wiring **OK**

Yes	No

Yes → ■ replace fresh air blower → End

No → ■ repair as necessary → End

less than 8V → ■ repair voltage supply to cavity **1** see wiring diagram → End

cardiagn.com

Fresh air blower speed cannot be regulated

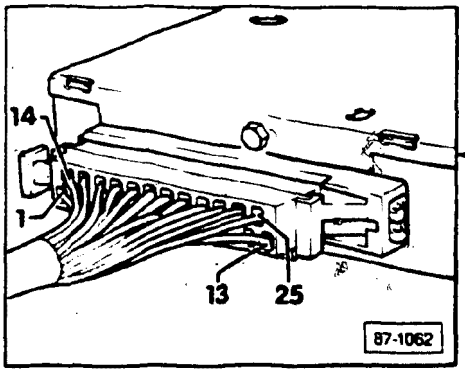

- switch ignition **ON**
- measure voltage between cavities **25** and **7** on A/C control head connector

less than 8V	greater than 8V

- repair voltage supply from cavities **25** or ground connection from cavity **7** according to wiring diagram

End

- check wiring from A/C control head connector cavities **14** and **15** to A/C blower control unit **J126** for open or shorted circuits according to wiring diagram

- wiring **OK**

Yes	No

- repair as necessary

End

- check A/C blower control unit ground connection from cavity **5** for open circuit

- ground connection **OK**

Yes	No

- repair as necessary

End

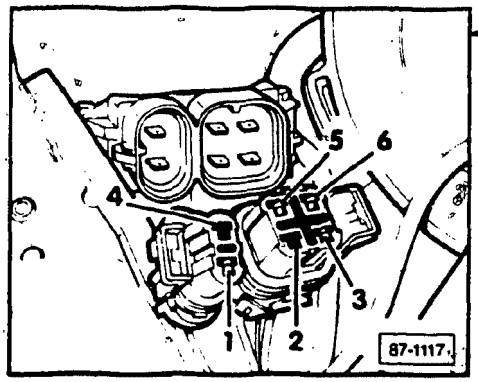

- replace A/C blower control unit
- check function

- fresh air blower RPM cannot be regulated

Yes	No

End

- reinstall old A/C blower control unit
- replace A/C control head

End

cardiagn.com

THIS FRAME INTENTIONALLY LEFT

BLANK

cardiagn.com

Temperature regulating flap servo motor, V68 (with feedback potentiometer), checking

- switch ignition **ON**
- set mode to **AUTO**
- set temperature to 24°C
- start diagnosis on channel 1

• display neither 07, 08 nor 15	• display 15 (without 07 or 08)	• display 07 or 08 (possibly with 15)

Go to Ⓑ next page

Go to Ⓓ three pages following

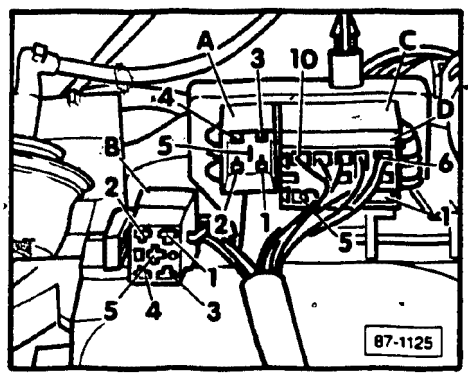

- separate 5-point connector on temperature regulating flap servo motor
- measure voltage between cavities **3** and **4** on connector **B**

• greater than 6V or less than 4.7V	• greater than 4.7V and less than 6V

- check wiring from 5-point connector on servo motor cavity **5** to A/C control head connector cavity **3** for open or short circuits according to wiring diagram

• wiring **OK**

Yes	No

Go to Ⓐ next page

- repair as necessary

End

- check wiring from 5-point connector on servo motor cavities **3** an **4** to A/C control head connector for open or shorted circuits

• wiring **OK**

No	Yes

- repair as necessary

End

Go to section D8-220

cardiagn.com

(A)

- switch ignition **OFF**
- wait 10 seconds
- switch ignition **ON**
- start diagnosis on channel 1

• display 08	• display 07

- replace A/C control head

End

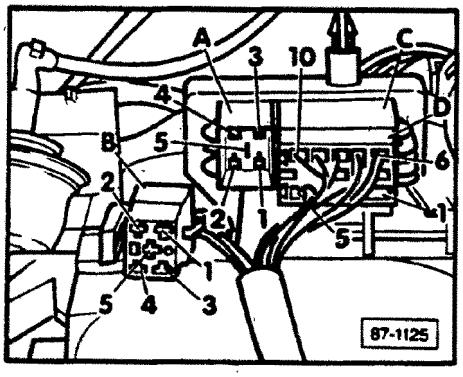

- bridge cavity **4** and **5** of 5-point connector **B** with jumper wire

- an additional 08 appears on the display

Yes	No

- replace A/C control head

End

- replace temperature regulating flap servo motor (with feedback potentiometer)

End

(B)

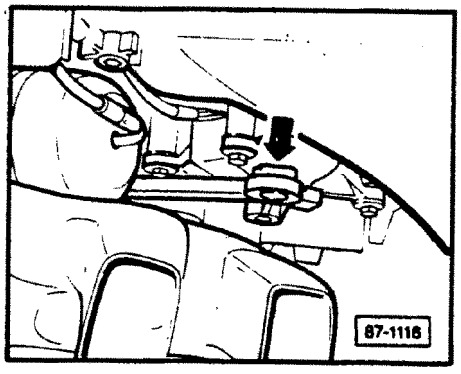

- gradually set temperature to **LO** and observe the movement of the temperature regulating flap linkage

- linkage moves in "cooling" direction

Yes	No
Go to (C) next page	Go to (D) two pages following

cardiagn.com

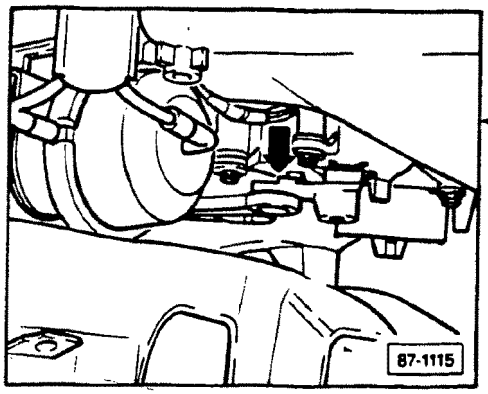

Ⓒ

- gradually set temperature to **HI** and observe movement of temperature regulating flap linkage
  - linkage moves in "heating" direction

Yes	No
	Go to Ⓓ next page

- start diagnosis on channel 8
  - display 9-14
  - display greater than 14 / less than 9

- adjust feedback potentiometer on adjustment motor to 12

Note

See repair manual, heater/air conditioner.

End

- set temperature to 26°C
- wait 30 seconds
- start diagnosis on channel 8 and 9
  - deviation between the specified feedback value on channel 9 and the actual feedback value on diagnostic channel 8, less than 3

Note

If the specified feedback value on diagnostic channel 9 is less than 30 or greater than 200 because of higher or lower ambient temperatures, select different temperature

Yes	No
End	replace A/C control head

End

cardiagn.com

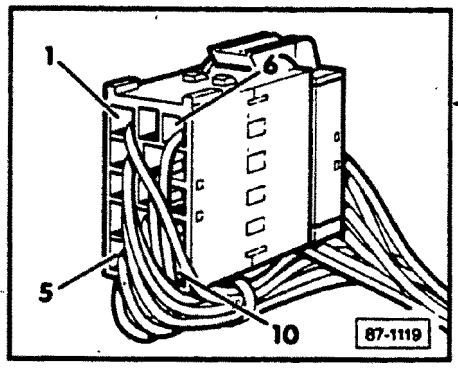

Ⓓ

- bridge cavities **1** and **2** of connector to A/C programmer with LED tester **US 1115** (VAG 1527B)
- set temperature to **LO**

- LED tester lights up or flashes

Yes	No

No → Go to Ⓕ two pages following

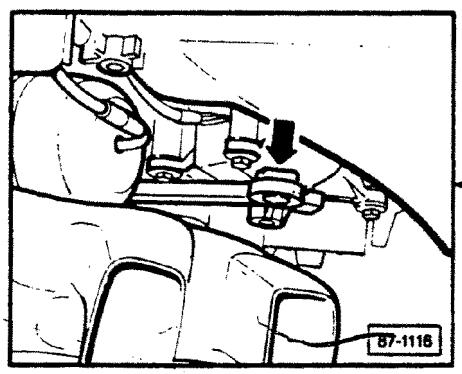

- linkage of temperature regulating flap moves in "cooling" direction

No	Yes

Yes → Go to Ⓔ next page

No →

- check wiring from cavities **1** and **2** of connector for A/C programmer to temperature regulating flap servo motor for open or short circuits according to wiring diagram

- wiring **OK**

Yes	No

No → repair as necessary → End

Yes →

- remove temperature regulating flap servo motor
- check temperature regulating flap for ease of operation

Yes	No

No → replace temperature regulating flap → End

Yes → replace temperature regulating flap servo motor → End

cardiagn.com

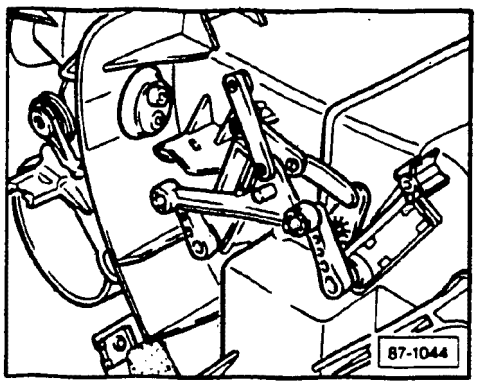

(E)

- set temperature to **HI**
  - LED test lamp lights up or flashes

Yes	No
	Go to (F) next page

- temperature regulating flap linkage moves in "heating" direction

No	Yes

- remove temperature regulating flap servo motor
- check temperature regulating flap for ease of operation
  - easy to operate

Yes	No
■ replace temperature regulating flap servo motor → End	■ repair temperature regulating flap → End

- check wiring from A/C control head cavities **3**, **6** and **11** to adjustment motor for temperature regulating flap for open or short circuits according to wiring diagram
  - wiring **OK**

No	Yes
■ repair as necessary → End	

- replace temperature regulating flap servo motor
- set temperature to 24°C
- call up diagnosis on channel 1
  - display 15

No	Yes
End	

- exchange temperature regulating flap servo motor
- replace A/C control head

End

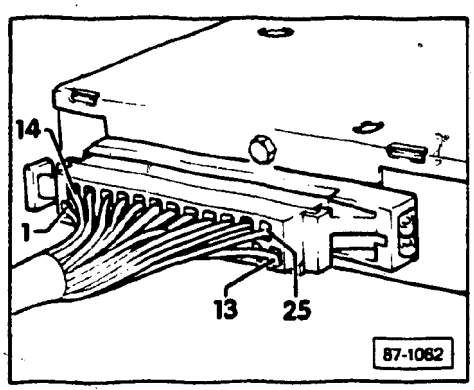

cardiagn.com

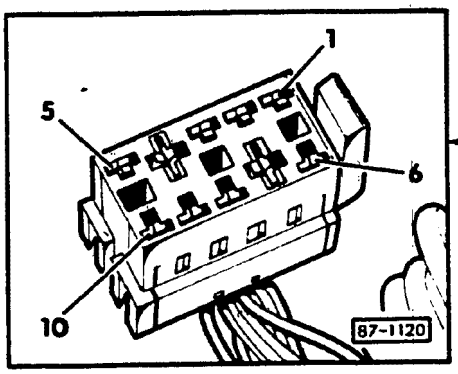

(F)

- separate connector to A/C programmer
- measure resistance between cavity 1 and 2 on connector

• greater than 30 ohms, less than 100 ohms	• less than 30 ohms, greater than 100 ohms

- check wiring to A/C programmer connector cavities 1 and 2 for short circuit according to wiring diagram

• wiring OK

Yes	No

Yes → Go to section D8-220

No → ■ repair as necessary → End

- check wiring from A/C programmer connector cavities 1 and 2 to temperature regulating flap servo motor for open or short circuits according to wiring diagram

• wiring OK

Yes	No

Yes → ■ replace temperature regulating flap servo motor → End

No → ■ repair as necesary → End

cardiagn.com

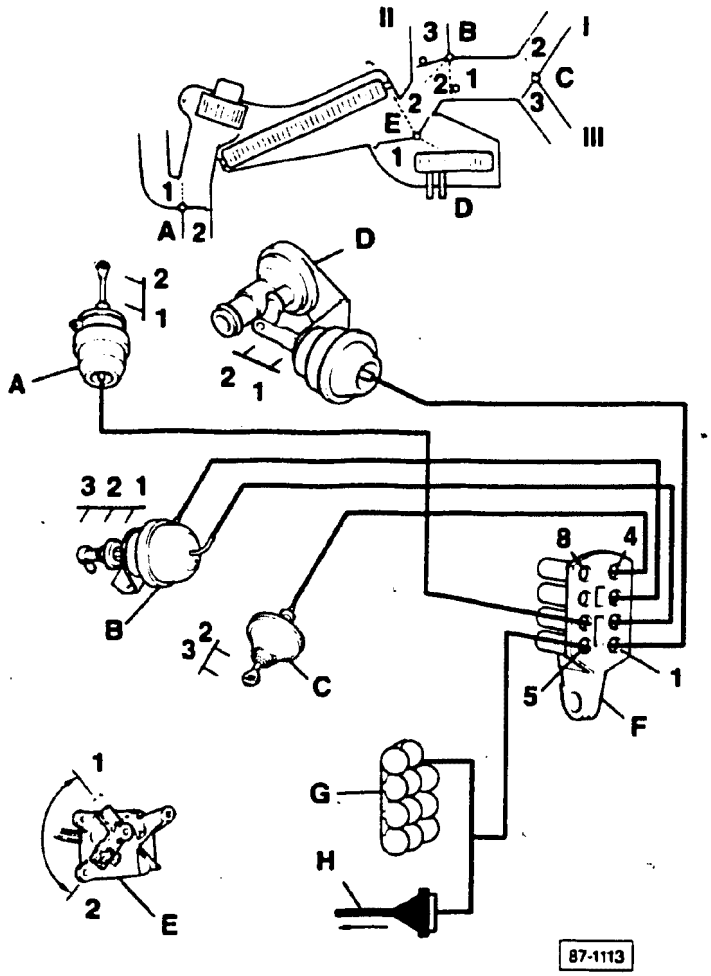

I	Defrost vent (windshield)
II	Instrument panel outlet
III	Footwell outlet
A	Vacuum unit for recirculation/fresh air flap
B	Vacuum unit for regulating flap (outlets, footwell/defrost)
C	Vacuum unit for regulating flap (footwell/defrost)
D	Vacuum unit for coolant check valve for heater
E	Adjustment motor for temperature regulating flap
F	Connector coupling for vacuum lines to A/C programmer
G	Vacuum reservoir
H	Check valve

cardiagn.com

Vacuum units and flap positions, checking

(air distribution is not correct or water valve is in wrong position)

Note

Do this section only if referred here by the Quick Check test.

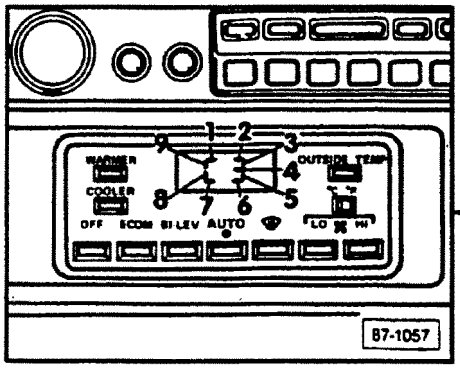

- start engine
- open all instrument panel air outlets
- set mode to **AUTO**
- set temperature to **LO**
- wait 1 minute
- start diagnosis on channel 7

- segments **2**, **3**, **4**, **5** and **6** light up

Yes	No (one or more of the segments do not light up)

→ No: ■ replace A/C control head

→ Yes:

- disconnect vacuum line connector from A/C programmer **F**
- check all vacuum servos and vacuum lines for leaks
- check all vacuum servos, flaps and the water valve for ease of operation

Note

The vacuum unit for regulating flap **B** goes only in position **1**, if there is vacuum at both connections. Apply vacuum to cavity **3** only if there is vacuum at cavity **2** at the same time.

- check vacuum supply at cavity 5

- all vacuum units, vacuum lines, and vacuum supply are **OK**
- all flaps and the heater valve are operable

Yes	No

Yes → Go to section D8-220

No → ■ repair as necessary → End

cardiagn.com

CONTINUED IN THE

BEGINNING OF NEXT ROW

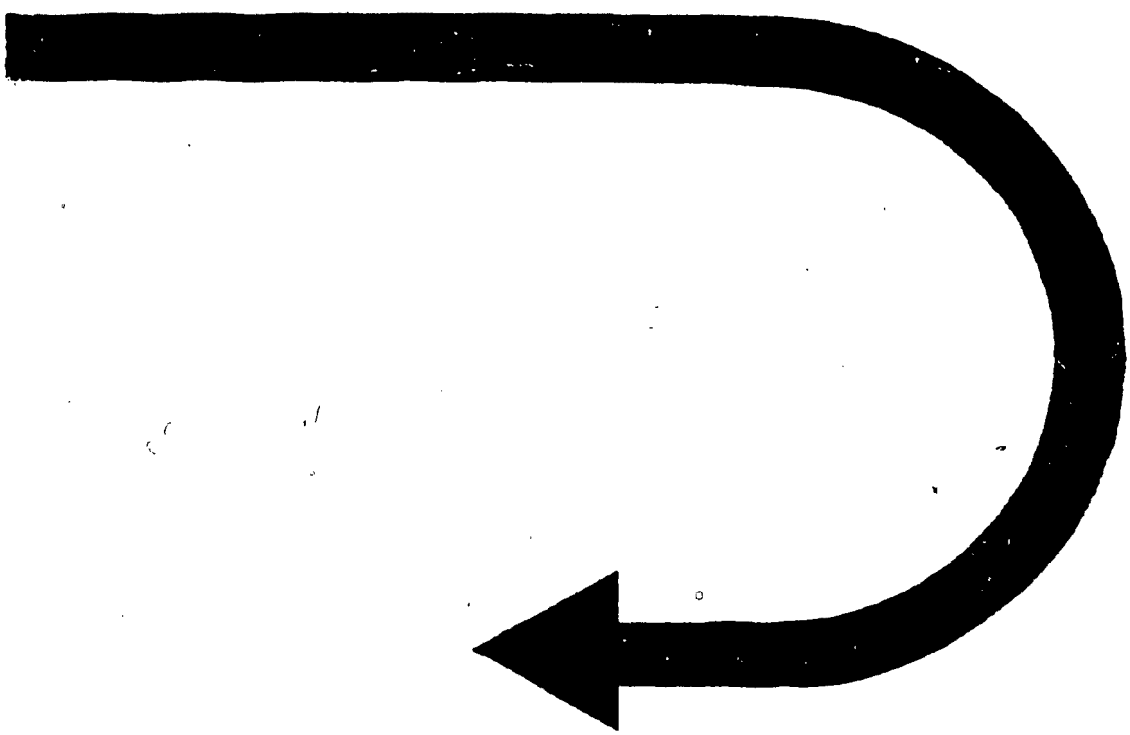

cardiagn.com

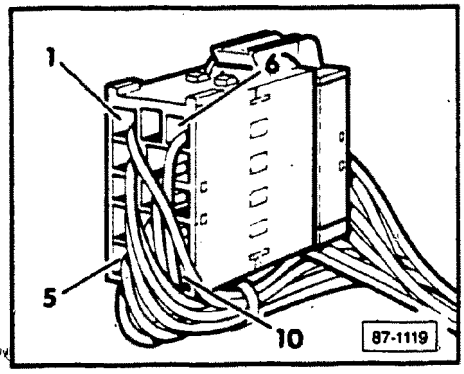

Errors in the area of climate control regulation

Note

Do this section only if referred here from other test sections.

- switch ignition **ON**
- measure voltage between cavities **4** and **7** on connector to A/C programmer

• less than 8V	• greater than 8V

- repair voltage supply from cavity **4** or ground connection from cavity **7** of connector according to wiring diagram

End

- measure voltage between cavities **6** and **7** at connector to A/C programmer

• greater than 4.7V and less than 6V	• less than 4.7V or greater than 6V

Go to Ⓐ next page

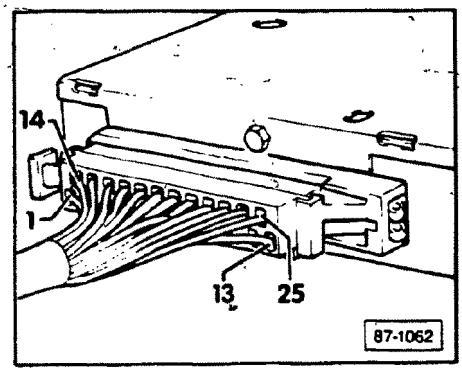

- check wiring from A/C programmer connector cavity **8**, **9**, and **10** to connector on A/C control head cavities **10**, **21**, and **22** according to wiring diagram

- wiring **OK**

Yes	**No**

Go to Ⓓ three pages following

- repair as necessary

End

cardiagn.com

Ⓐ

- disconnect connector to A/C programmer
- measure voltage between cavities **6** and **7**

• greater than 4.7V and less than 6V	• less than 4.7V or greater than 6V

- replace A/C programmer

End

- measure voltage between cavities **25** and **7** on A/C control head connector

• less than 8V	• greater than 8V

- repair voltage supply from cavity **25** or ground connection from cavity **7** according to wiring diagram

End

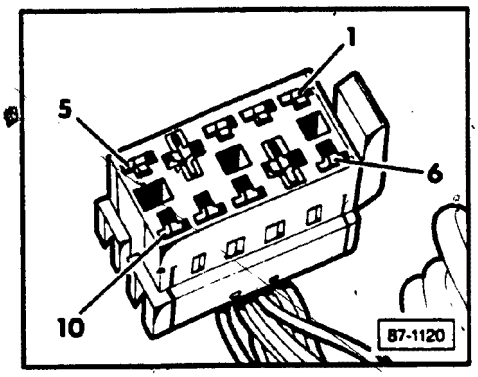

- measure voltage between cavities **11** and **7** on A/C control head connector

• greater than 6V	• less than 6V and greater than 4.7V	• less than 4.7V

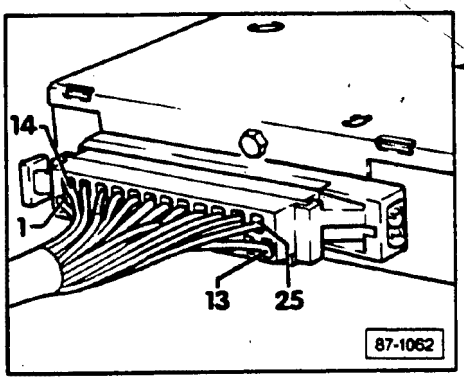

Go to Ⓑ next page

Go to Ⓒ next page

- check wiring from A/C control head connector, cavity **11** to A/C programmer according to wiring diagram, repair as necessary

End

cardiagn.com

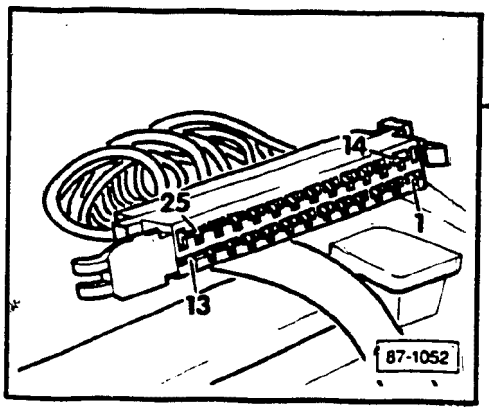

Ⓑ

- remove connector from A/C control head and measure voltage on connector between cavity **11** and **7**

• greater than 6V	• less than 6V

- replace A/C control head

End

- eliminate short circuit in wiring to cavity **11** according to wiring diagram

End

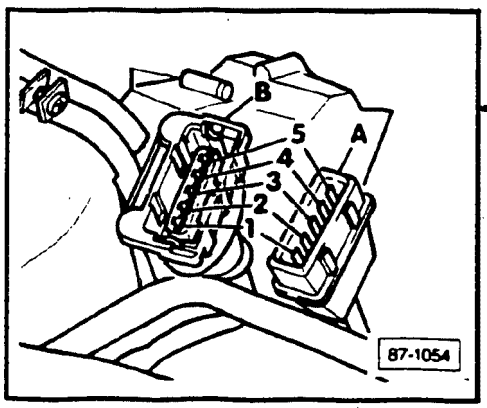

Ⓒ

- disconnect 5-point connector to temperature regulating flap servo motor
- measure voltage to cavities **3** and **4** on connector **B**

• greater than 4.7V	• less than 4.7V

- replace temperature regulating flap servo motor (with feedback potentiometer)

End

- check wiring from connector for A/C control head cavity **11** to A/C programmer and to temperature regulating flap servo motor according to wiring diagram

• wiring **OK**

Yes	No
• replace A/C control head	• repair as necessary
End	End

cardiagn.com

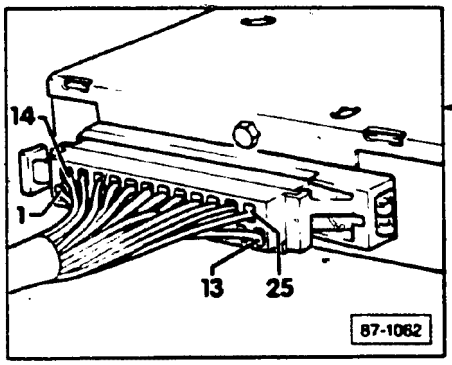

D

- measure voltage between cavities **25** and **7** on the A/C control head
  - greater than 8V
  - less than 8V

- replace A/C programmer
- check affected function
  - function **OK**
    - **Yes** → End
    - **No** → reinstall old A/C programmer; replace A/C control head → End

- repair voltage supply from cavity **25** or ground connection from cavity **7** → End

cardiagn.com

A/C high pressure switches (F118, F23), checking

- switch ignition **ON**
- set mode to **AUTO**
- set temperature to 24°C
- start diagnosis on channel 17

• segment **2** (high-pressure cutout switch **F118**, red housing) lights up	• segment **2** (high-pressure cut-out switch **F112**, red housing) does not light up

Go to Ⓐ next page

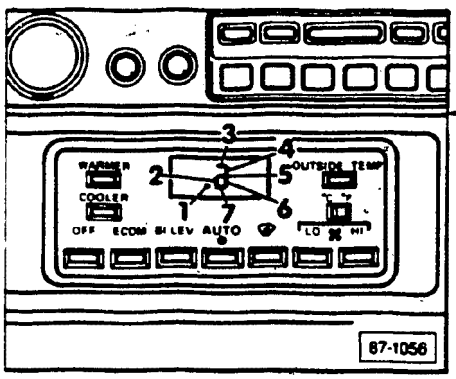

- remove connector from high-pressure switch **F118**
- segment **2** lights up

Yes	No
Go to Ⓑ two pages following	

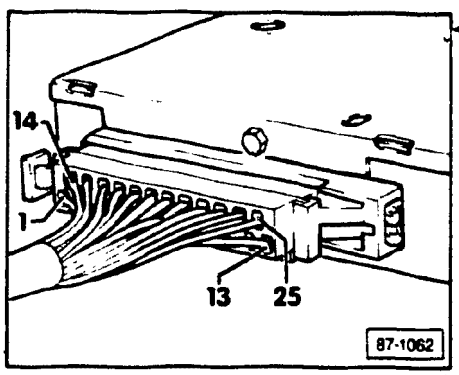

- check wiring from A/C control head connector cavity **5** to high-pressure switch **F118** for short circuit
- short circuit

No	Yes
■ replace A/C control head	■ repair as necessary
End	End

cardiagn.com

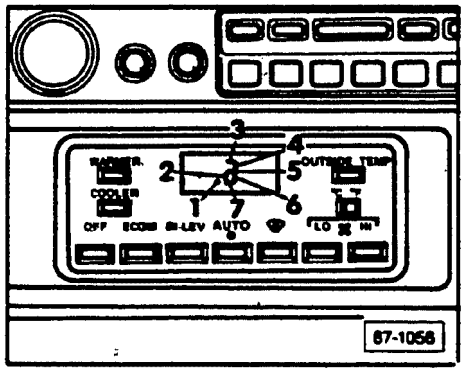

Ⓐ

- remove A/C high-pressure switch **F118** connector and bridge with jumper wire
- wait 10 seconds

- segment 1 (compressor on) lights up

Yes	No

- replace A/C high-pressure switch **F118**

End

- check wiring from A/C control head connector cavities **5** and **6** to A/C high pressure switch **F118** for short or open circuits according to wiring diagram

- wiring **OK**

Yes	No

- replace A/C control head

End

- repair as necessary

End

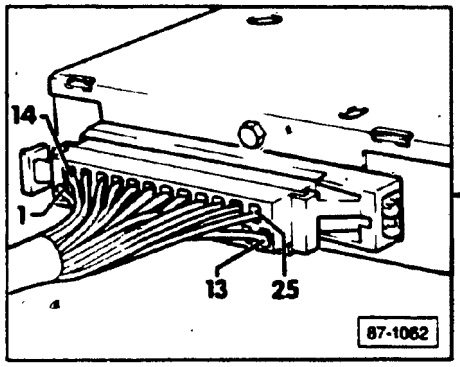

cardiagn.com

Ⓑ

Is the compressor switched off during driving or during the cooling performance test by the high-pressure switch **F118**

No	Yes

No → End

Yes →

- check wiring from A/C control head connector cavity **5** to A/C high-pressure switch **F118** for a loose terminal
  - wiring **OK**

Yes	No

No →
- repair as necessary

End

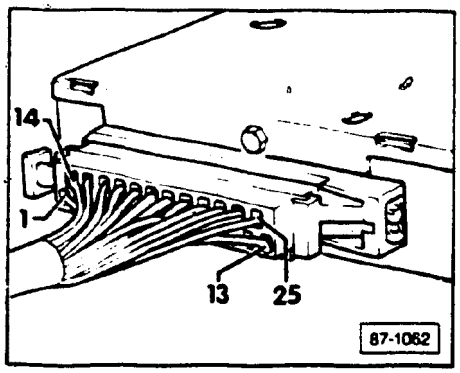

Yes →

- reconnect A/C high-pressure switch **F118** (red housing) connector
- remove connector from A/C high-pressure switch (**F23**, green or yellow housing) and bridge with jumper wire
  - the fan runs at 2nd speed

Yes	No

No → Go to Ⓒ next page

Yes →

- reconnect connector to A/C high-pressure switch (green housing)
- connect A/C pressure gauges
- do cooling performance test (section D8-340)
  - the radiator cooling fan is switched to 2nd speed by high-pressure switch **F23**, (green or yellow housing) at a maximum 17.5 bar on high-pressure side (activation time depends on ambient temperature and engine RPM)

No	Yes

Yes → Go to Ⓓ next page

No →
- replace high-pressure switch **F23**, (yellow or green housing)

End

cardiagn.com

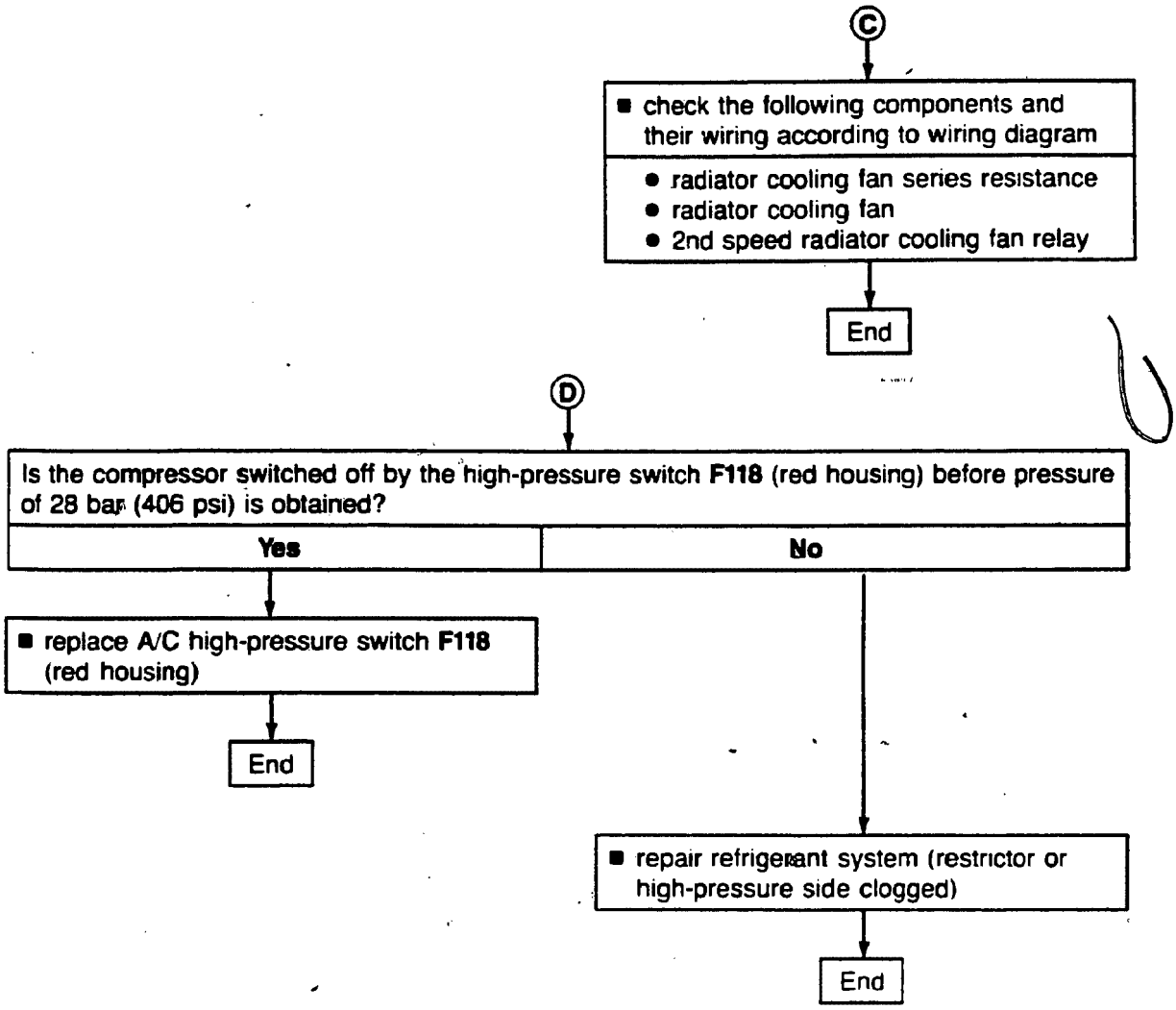

cardiagn.com

Outside temperature sensors (G57, G17), checking

- switch ignition **ON**
- set mode to **AUTO**
- set temperature to 24°C
- start diagnosis on channel 4
- measure temperature at installation location of outside temperature sensor, **G57** in plenum on evaporator
- read diagnostic display on channel 4 and determine temperature using table two pages following
- compare measured and calculated temperature

• difference less than 3°C (5.4°F)	• difference greater than 3°C (5.4°F)
↓	→ Go to Ⓐ next page

- start diagnosis on channel 5
- measure temperature at installation location of outside temperature sensor, **G17** in front of condenser on cowl
- read diagnostic diaplay on channel 5 and determine temperature using table two pages following
- compare measured and calculated temperature

• difference less than 3°C (5.4°F)	• difference greater than 3°C (5.4°F)
→ End	→ Go to Ⓐ next page

cardiagn.com

(A)

- disconnect connector on affected outside temperature sensor, **G17** or **G57**
- measure resistance of affected outside temperature sensor and calculate temperature using table on next page
- measure temperature at installation location of affected outside temperature sensor
- compare measured and calculated temperature

• difference greater than 3°C (5.4°F)	• difference less than 3°C (5.4°F)

- replace affected outside temperature sensor

End

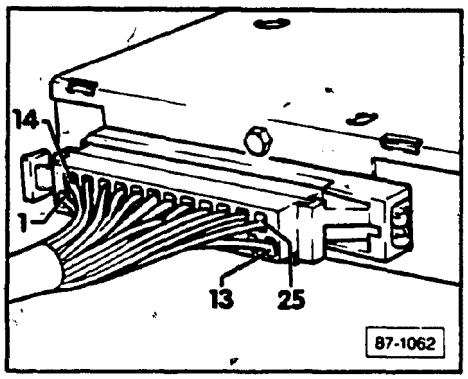

- check wiring from A/C control head connector cavities **6** and **1** or **16** and **1** for open or shorted circuits to sensors **G57** or **G17** respectively.

Note

Wire from cavity **6** goes to outside temperature sensor in plenum near evaporator.

Wire from cavity **16** goes to outside temperature sensor in cowl near condenser

• wiring **OK**	
Yes	**No**

- replace A/C control head

End

- repair as necessary

End

cardiagn.com

Resistance value of outside temperature sensors

Outside temperature in °C (°F) at installation location	Diagnostic display Diagnostic channel 4 and 5	Resistance value of outside temperature sensor (ohms)
−10 (14)	188	5636
− 8 (18)	183	5097
− 6 (21)	177	4558
− 4 (25)	171	4088
− 2 (28)	165	3688
0 (32)	159	3288
2 (36)	153	2992
4 (39)	146	2697
6 (43)	140	2439
8 (46)	134	2216
10 (50)	127	1995
12 (54)	122	1826
14 (57)	116	1657
16 (61)	110	1508
18 (64)	104	1379
20 (68)	98	1250
22 (72)	93	1150
24 (75)	88	1050
26 (79)	83	961
28 (82)	78	883
30 (86)	73	805
32 (90)	69	744
34 (93)	65	683
36 (97)	61	628
38 (100)	57	580
40 (104)	54	532
42 (108)	50	493
44 (111)	47	455
46 (115)	44	421
48 (118)	42	390
50 (122)	39	360
52 (126)	37	335
54 (129)	34	311
56 (133)	32	289
58 (136)	30	269
60 (140)	28	249

cardiagn.com

Speed dependent blower control, checking

Note

Control head limits maximum fresh air blower speed from speedometer signal, and/or lack of speedometer signal; approximately 4 minutes after ignition is switched **ON**.

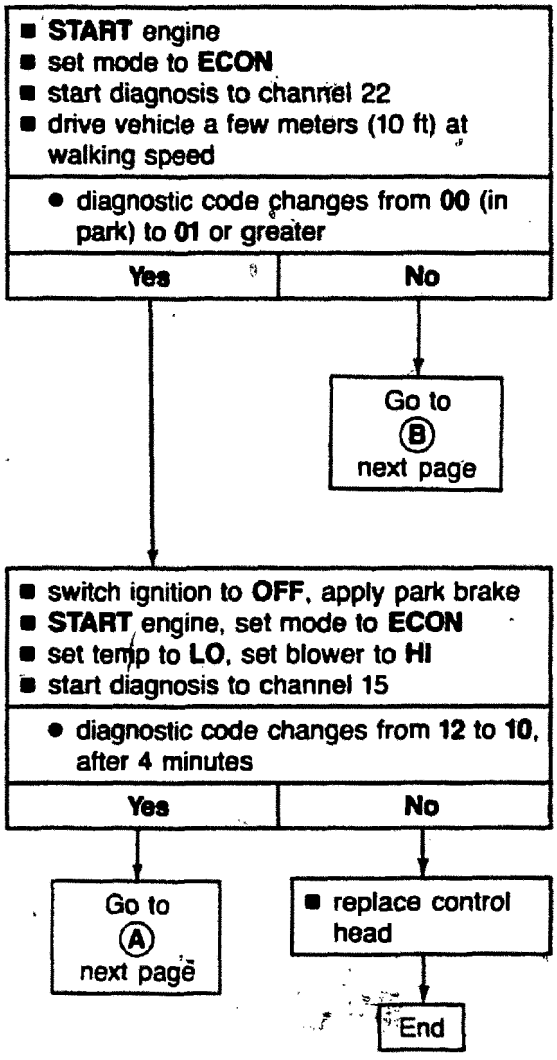

cardiagn.com

Ⓐ

- release park brake
- drive vehicle at walking speed for several meters (20 ft)
- diagnostic code changes from **10** to **12** (in park)

Yes	No
End	■ replace control head → End

Ⓑ

- check if any components other than control head, connect to cavity **2** (speed signal)

Yes	No
■ Is function of component **OK**?	Go to Ⓓ next page

Yes	No
Go to Ⓒ next page	■ check wiring from instrument panel insert to connector of control head cavity **2** per wiring diagram for open

- wiring **OK**

Yes	No
■ replace control head → End	■ repair as necessary → End

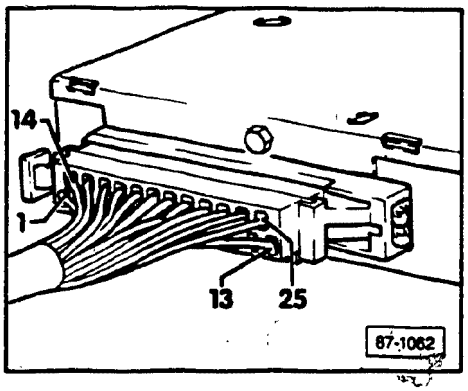

cardiagn.com

Ⓒ

- remove connector from control head
- check function of cruise control, or board computer

- function OK

Yes	No

Yes

- replace control head

End

No

- check wiring from connector of control head cavity **2** to component

- wiring OK

Yes	No

No

- repair as necessary

End

Yes

- check wiring and respective components of speedometer
- repair as required

End

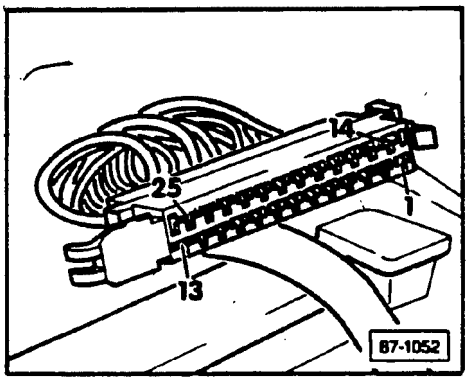

Ⓓ

- check wiring from cavity **2** of control head to instrument panel for shorts or opens according to wiring diagram

- wiring OK

Yes	No

Yes

- replace control head
- check function

- function OK

Yes	No

Yes

End

No

- fault not in A/C system
- re-install previous control head
- check instrument cluster

- repair/replace as necessary

End

No

- repair as necessary

End

cardiagn.com

Electrical system voltage display, checking

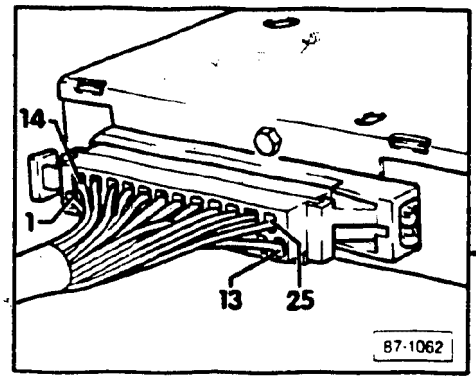

- switch ignition **ON**
- set mode to **AUTO**
- start diagnosis on channel 11
- measure voltage between cavities **19** and **7** on A/C control head connector

• greater than 5V	• less than 5V

Go to section D8-270 (check low-pressure switch)

- difference between displayed and measured voltage

• less than 1.5V	• greater than 1.5V

End

- replace A/C control head

End

cardiagn.com

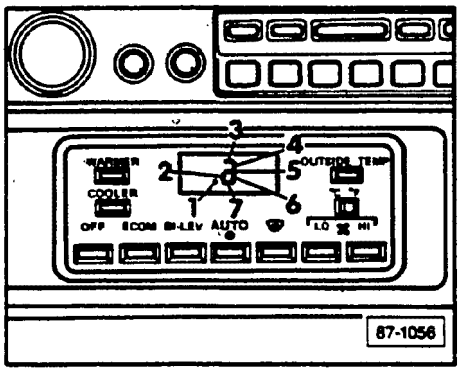

A/C refrigerant low-pressure switch (F73), checking

Note

The A/C refrigerant low-pressure switch shuts off the A/C compressor when refrigerant pressure is low.

- switch ignition **ON**
- set mode to **AUTO**
- set temperature to 24°C
- start diagnosis to channel 17

- segment **5** (low-pressure switch) lights up

Yes	No

Yes → Go to Ⓐ next page

No →

- remove connector from low-pressure switch

- segment **5** (low-pressure switch) lights up

Yes	No

Yes →

Is the compressor switched off by the low-pressure switch during the cooling performance test?

Yes	No

Yes → Go to Ⓑ next page

No → End

No →

- check wiring between low-pressure switch and A/C control head connector cavity **19** for short circuit according to wiring diagram

- wiring **OK**

Yes	No

Yes →

- replace A/C control head

End

No →

- repair wiring as necessary

End

cardiagn.com

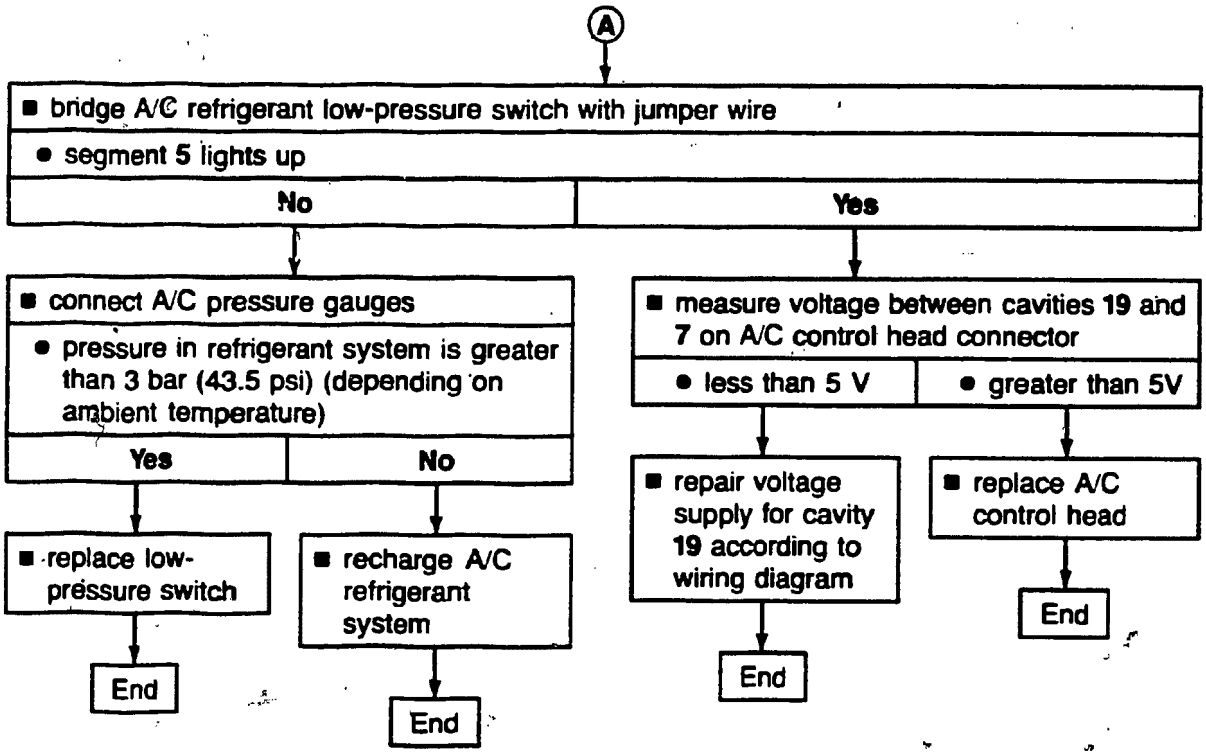

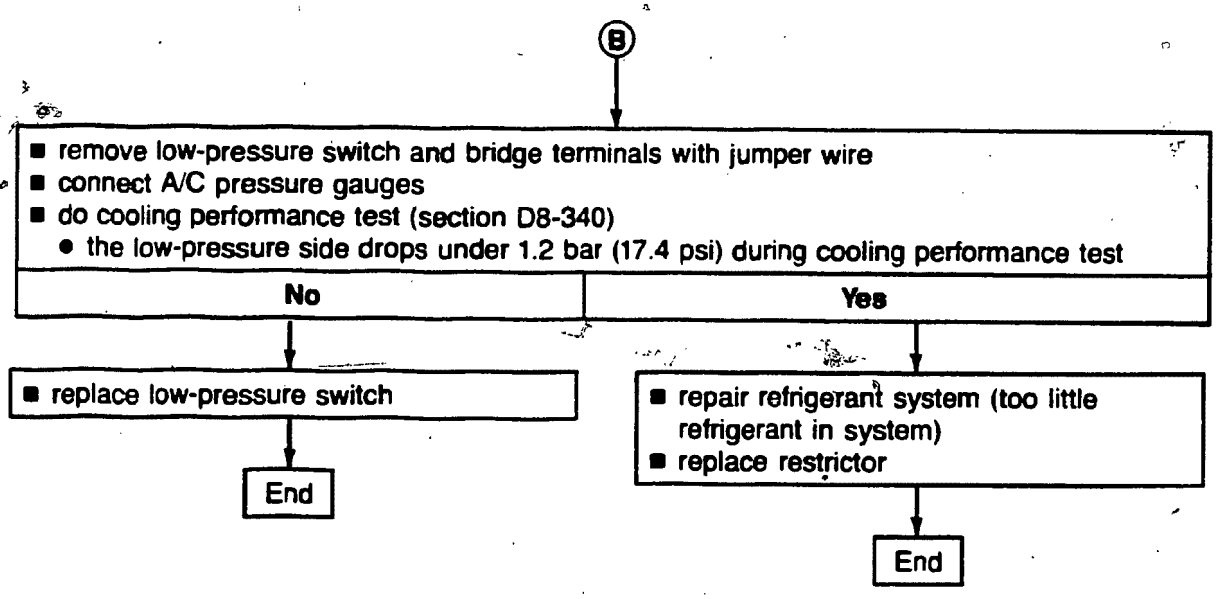

cardiagn.com

Kick-down switch F46, checking

Note

Kick-down switch **F46** is not installed in all vehicles with automatic transmission.

The A/C compressor is switched off for 12 seconds when kick-down switch **F46** is closed.

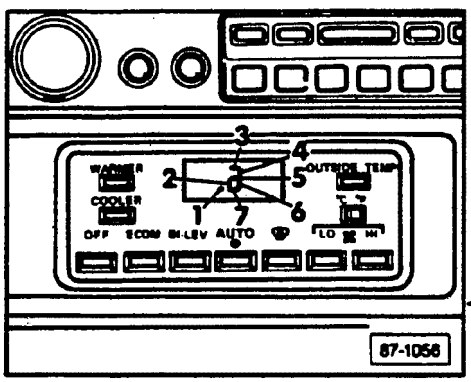

- switch ignition **ON**
- set mode to **AUTO**
- set temperature to 24°C
- start diagnosis to channel 17

- segment **6** (kick-down switch) lights up

No	Yes

Yes → Go to Ⓐ next page

No →

- depress accelerator pedal

- segment **6** (kick-down switch) lights up

Yes	No

Yes → End

No → Go to Ⓑ two pages following

cardiagn.com

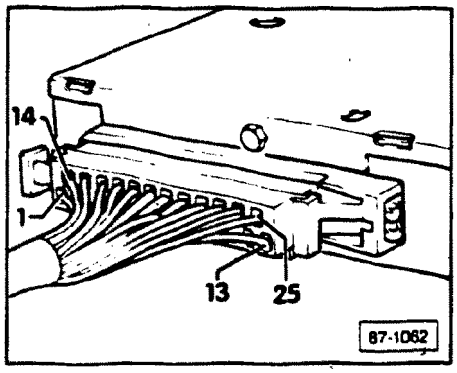

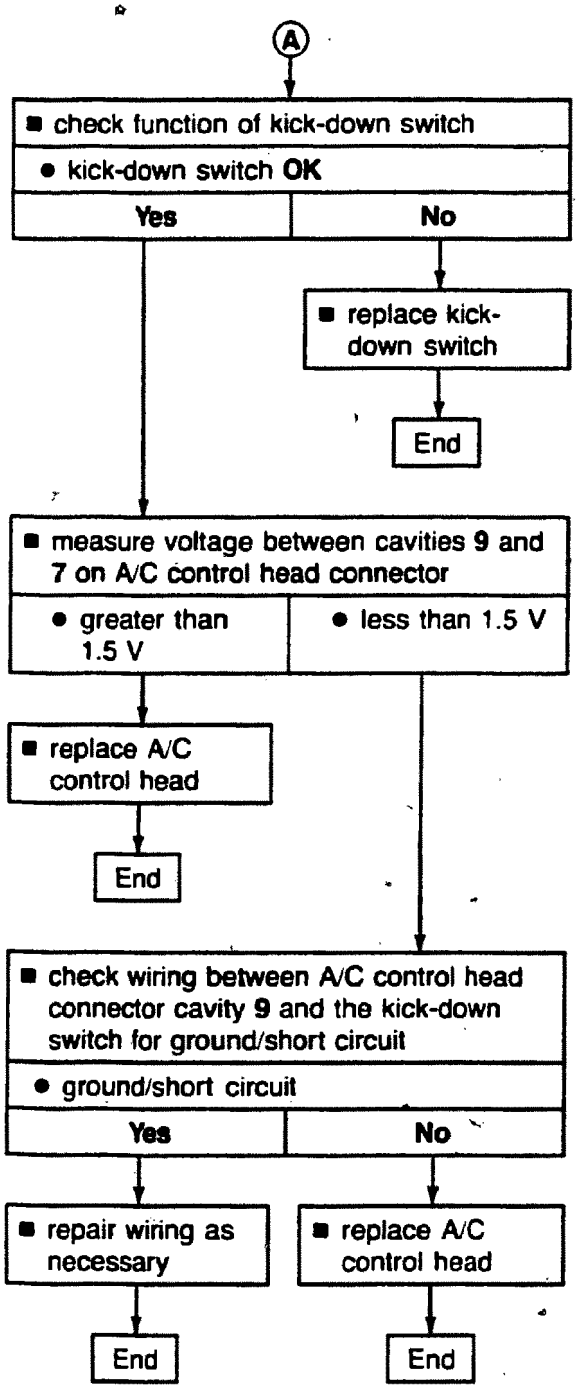

cardiagn.com

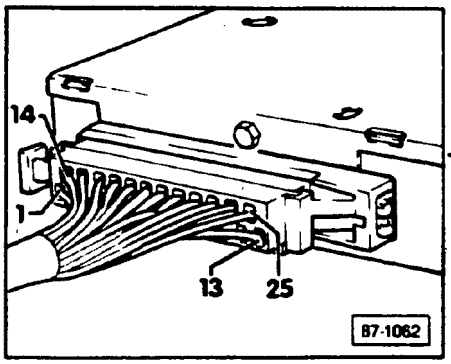

(B)

- release accelerator pedal (kick-down switch opens)
- measure voltage between cavities 9 and 7 on A/C control head connector

• less than 1.5 V	• greater than 1.5 V

- check function of kick-down switch

• kick-down switch **OK**

Yes	No

- replace kick-down switch

End

- depress accelerator pedal (kick-down switch closes)
- measure voltage between cavities 9 and 7 on A/C control head connector

• less than 1.5V	• greater than 1.5V

- replace A/C control head

End

- check kick-down switch function

• kick-down switch **OK**

Yes	No

- check wiring to kick-down switch for short circuit according to wiring diagram, repair as necessary

End

- replace kick-down switch

End

- check wiring from A/C control head connector to kick-down switch for short circuit

• short circuit

Yes	No

- repair as necessary

End

- replace A/C control head

End

cardiagn.com

Kick-down function, checking

The A/C compressor is switched off for 12 seconds when kick-down function is activated.

A/C kick-down is controlled by:

- A/C kick-down switch, **F46** on vehicles with 3-speed automatic transmission
- automatic transmission control unit, **J217** on vehicles with 4-speed automatic transmission

Note

Some vehicles with 3-speed automatic transmissions may not have the A/C kick-down switch installed, see wiring diagram.

- On 90 Quattro 20V and Coupe Quattro 20V, the A/C compressor clutch can be switched off via the Multi-point injection control unit, **J192** and the A/C compressor clutch control unit, **J153**. A/C compressor clutch shut-off via these two components is not recognized by the A/C control head, **E87**.

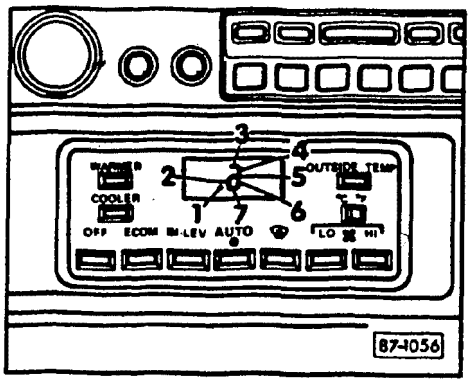

- switch ignition **ON**
- place transmission in gear ("D")
- set mode to **AUTO**
- set temperature to 24°C (75°F)
- start diagnosis on channel 17
  - segment **6** (kick-down) lights up

YES	NO
Go to Ⓐ next page	

- fully depress accelerator pedal
  - segment **6** (kick-down) lights up

YES	NO
End	Go to Ⓑ next page

cardiagn.com

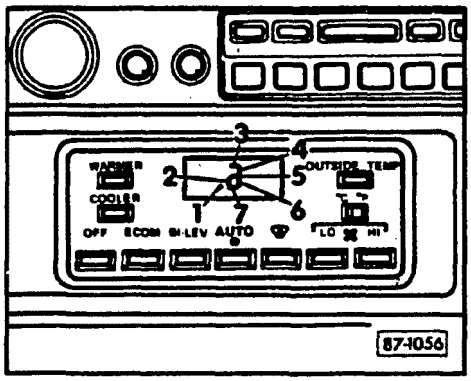

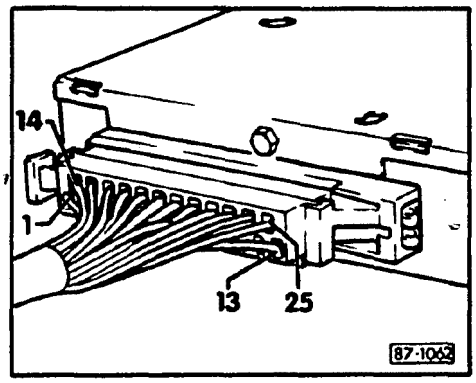

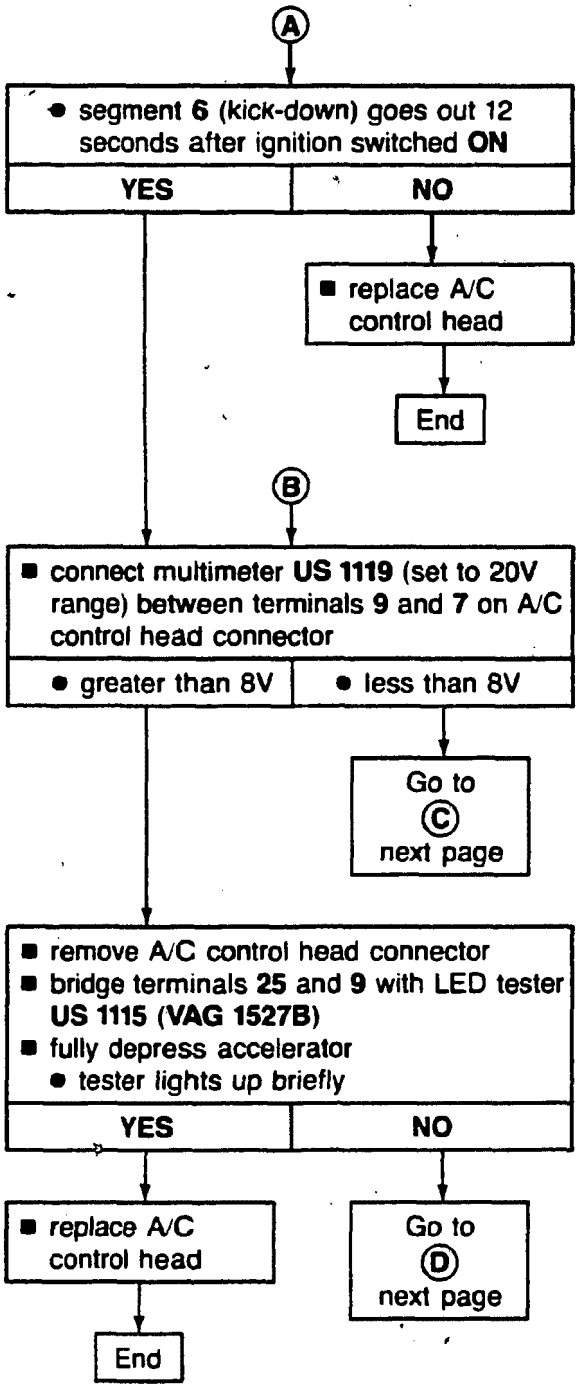

cardiagn.com

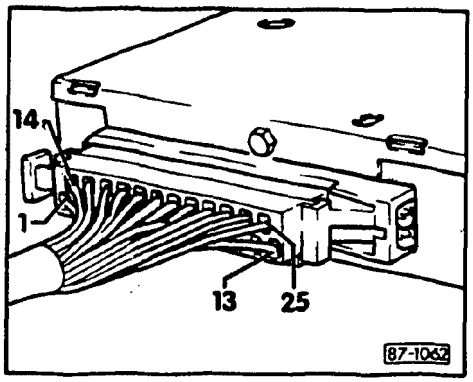

Ⓒ

- remove A/C control head connector
- bridge terminals 25 and 9 with LED tester **US 1115 (VAG 1527B)**
  - tester lights up

YES	NO

NO → ■ replace A/C control head → End

YES → Ⓓ

- check wiring to terminal 9 of A/C control head connector for open or short circuits according to wiring diagram
  - wiring **OK**

YES	NO

NO → ■ repair wiring as necessary → End

YES →

vehicles with 3-speed automatic transmission	vehicles with 4-speed automatic transmission
■ check kick-down switch, F46 and wiring to switch according to wiring diagram ■ repair as necessary	• fault not in area of climate control ■ check automatic transmission control unit, **J217** — See Repair Group D3
End	End

cardiagn.com

C

CONTINUED IN THE

BEGINNING OF NEXT ROW

cardiagn.com

Electronic thermoswitch (multi-function temperature sensor) F76, checking

Do Not attempt to test switch by alternative method.

Note

Test does not apply to 4-cylinder engines with coolant temperature sensor **F14**.

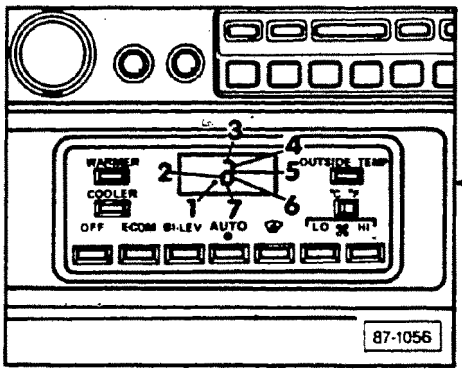

- switch ignition **ON**
- set mode to **AUTO**
- set temperature to 24°C
- start diagnosis on channel 17

- segment **7** (hot light switch) lights up

Yes	No
Go to Ⓐ next page	

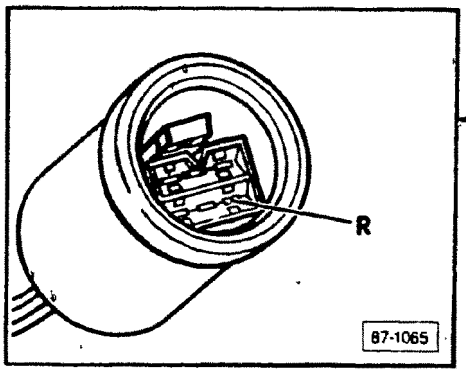

- remove connector from thermoswitch
- connect terminal **R** to ground with jumper cable

- segment **7** lights up

Yes	No
	Go to Ⓑ next page

Is the A/C compressor switched off by the electronic thermoswitch (multi-function temperature sensor) during driving or during the cooling performance test?

Yes	No
	End

- check engine cooling system and radiator cooling fan control
- replace electronic thermoswitch (multi-function temperature sensor) if necessary

End

cardiagn.com

(A)

■ remove connector from electronic thermoswitch (multi-function temperature sensor)

● segment 7 lights up

No	Yes

No → ■ replace electronic thermoswitch (multi-function temperature sensor) → End

Yes →

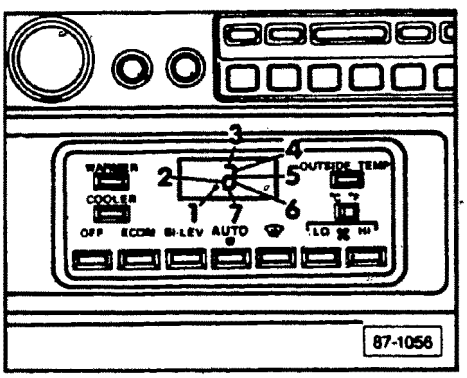

■ check wiring from A/C control head connector cavity **20**, to electronic thermoswitch connector for ground/short circuit

● ground/short circuit

Yes	No

Yes → ■ repair wiring as necessary → End

No → ■ replace A/C control head → End

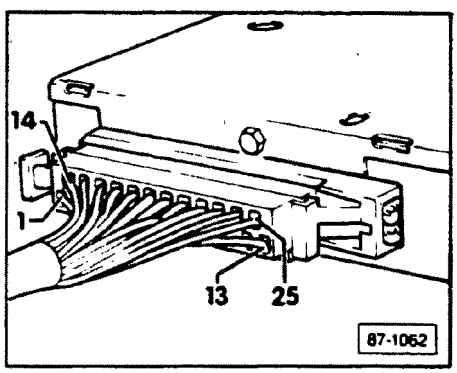

(B)

■ check wiring from A/C control head connector cavity **20** to electronic thermoswitch connector for open circuits

● open circuit

Yes	No

Yes → ■ repair as necessary → End

No → ■ replace A/C control head → End

cardiagn.com

Inside temperature sensors (G56, G86), checking

Note

The measurement value of the temperature sensor can deviate significantly from the ambient temperature because of the temperature increase at the installation location. The comparable inside temperature is always to be measured at the installation location of the sensor.

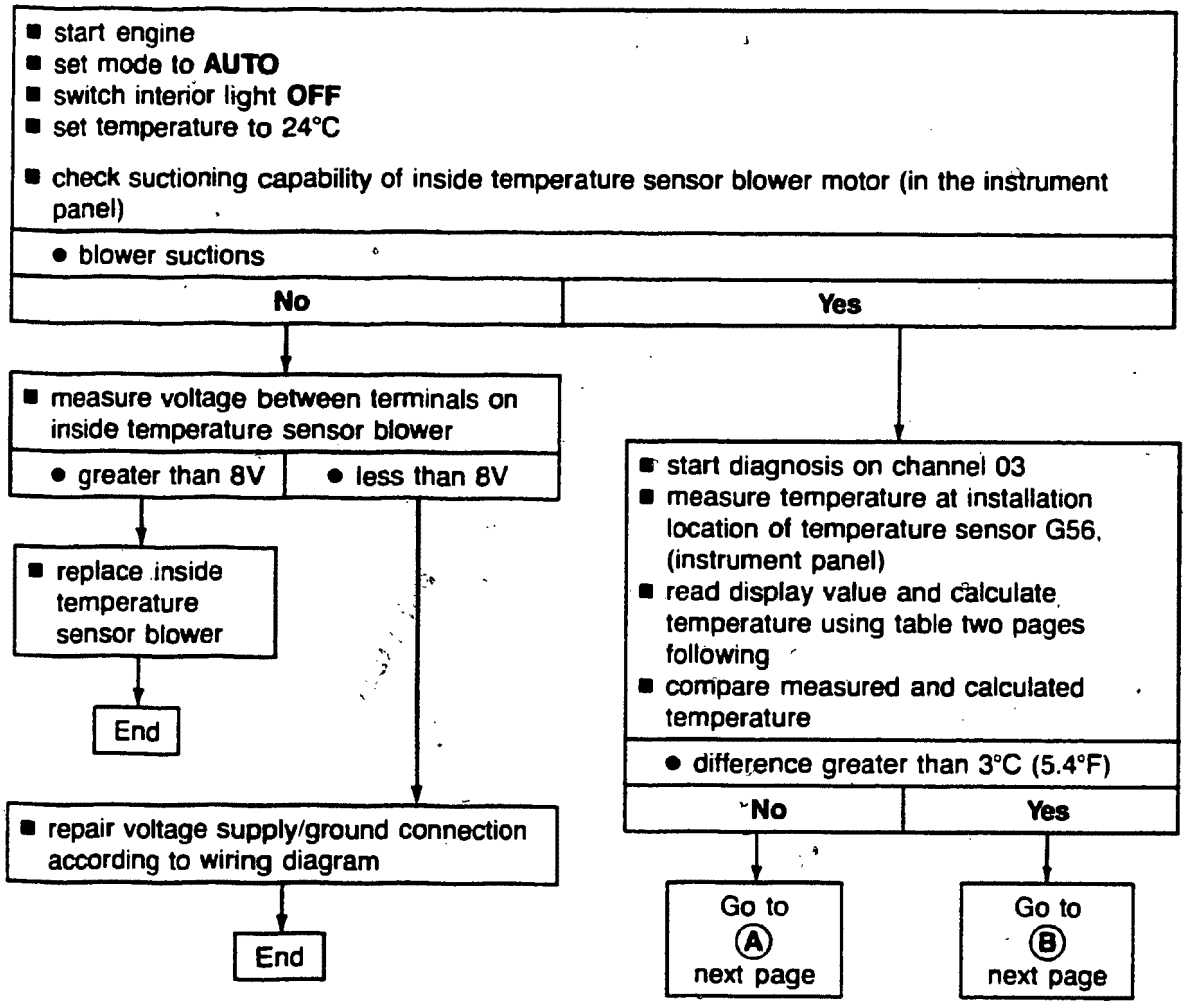

cardiagn.com

(A)

- start diagnosis on channel **02**
- measure temperature at installation location of temperature sensor **G86** (roof)
- read display value and calculate temperature using table on next page
- compare measured and calculated temperature

- difference greater than 3°C (5.4°F)

No	Yes

No → End

Yes →

(B)

- disconnect connector on affected temperature sensor
- measure sensor resistance and calculate temperature using table, on next page
  - difference compared to measured temperature is greater than 3°C (5.4°F)

Yes	No

Yes →

- replace defective temperature sensor

→ End

No →

- check wiring from affected temperature sensor to A/C control head cavities **4** and **6** or **18** and **6** for short or open circuits according to wiring diagram

- wiring **OK**

Yes	No

Yes →

- replace A/C control head

→ End

No →

- repair as necessary

→ End

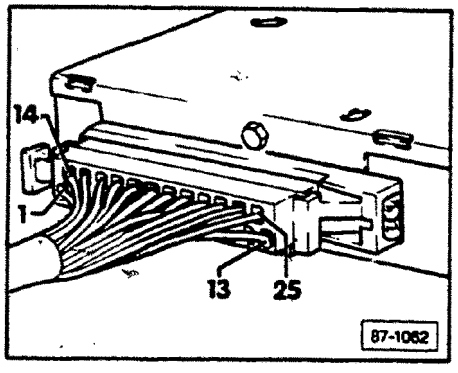

cardiagn.com

Resistance value of interior temperature sensors, G56 and G86

Inside temperature in °C (°F) at installation location	Diagnostic display Diagnostic channel 2 and 3	Resistance value of inside temperature sensor (ohms)
4 (39)	187	7699
6 (43)	182	6951
8 (46)	177	6308
10 (50)	171	5666
12 (54)	166	5178
14 (57)	160	4690
16 (61)	154	4259
18 (64)	148	3886
20 (68)	142	3513
22 (72)	137	3225
24 (75)	131	2938
26 (79)	125	2683
28 (82)	119	2460
30 (86)	113	2237
32 (90)	108	2062
34 (93)	103	1888
36 (97)	97	1732
38 (100)	92	1595
40 (104)	87	1459
42 (108)	83	1350
44 (111)	78	1242
46 (115)	74	1144
48 (118)	70	1058
50 (122)	65	972

cardiagn.com

Engine coolant temperature sensor G62, checking

Note

The engine coolant temperature sensor is not installed in all vehicles (to be phased in). For vehicles without coolant temperature sensor, diagnostic display on channel 6 255 = open circuit.

- start engine
- set mode to **AUTO**
- set temperature to **HI**
- start diagnosis on channel 6
- read diagnostic display on channel 6 and calculate coolant temperature using table two pages following

- difference between calculated coolant temperature and displayed coolant temperature on coolant temperature display

• less than 10°C (11.8°F)	• greater than 10°C (11.8°F)
End	Go to Ⓐ next page

cardiagn.com

(A)

- remove connector on engine coolant temperature sensor, G62
- measure resistance of coolant temperature sensor and calculate coolant temperature using table on next page
- compare calculated coolant temperature with coolant temperature display (diagnosis channel 6)

• difference greater than 10°C (11.8°F)	• difference less than 10°C (11.8°F)

- replace engine coolant temperature sensor

End

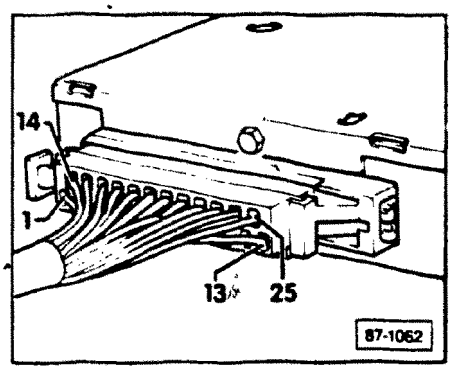

- check wiring from A/C control head connector cavities 6 and 17 to coolant temperature sensor for excessive resistance and open or short cirucits

• wiring OK

Yes	No
• replace A/C control head	• repair as necessary
End	End

cardiagn.com

Resistance value of coolant temperature sensor, G62

Coolant temperature in °C (°F) at installation location	Diagnostic display (Diagnostic channel 6)	Resistance value of coolant temperature sensor (ohms)
−20 (−4)	243	14700
−10 (14)	236	9200
0 (32)	225	5600
5 (41)	219	4635
10 (50)	212	3670
15 (59)	205	3060
20 (68)	195	2450
25 (77)	187	2060
30 (86)	176	1670
35 (95)	167	1415
40 (104)	155	1160
45 (113)	145	995
50 (122)	134	830
55 (131)	124	715
60 (140)	113	600
65 (149)	104	520
70 (158)	94	440
75 (167)	86	380
80 (176)	76	320
85 (185)	71	281
90 (194)	62	242
95 (203)	57	216
100 (212)	52	190
110 (230)	41	143
120 (248)	33	110
130 (266)	27	90

cardiagn.com

Idle speed increase (A/C ON), checking
RPM increase (compressor ON), checking

Note

Idle speed increase (A/C **ON**)
(idle speed increases when A/C is switched **ON**)

- not for vehicles with CIS-E III fuel injection
- for vehicles with CIS fuel injection (check according to wiring diagram whether vehicle is equipped for idle speed increase)
- idle speed increase occurs in all modes (except **OFF**), as soon as high heating performance is required and in the **AUTO**, **DEF**, and **BI-LEV** modes, as soon as high cooling performance is required
- idle speed increase does not occur with blower speed set to **LO**

RPM increase (compressor ON)

- for all vehicles

Vehicle is equipped for idle speed increase (A/C **ON**)?

Yes	No
	Go to Ⓕ five pages following (RPM increase with compressor **ON**)

- start engine
- set mode to **ECON**
- set temperature to **HI**
- adjust blower speed back and forth between **LO** and **HI**

- idle speed increases by 70 to 150 RPM with blower speed preset to **HI** as opposed to blower speed preset to **LO**

Yes	No
Go to Ⓕ five pages following (RPM increase with compressor **ON**)	Go to Ⓐ next page

cardiagn.com

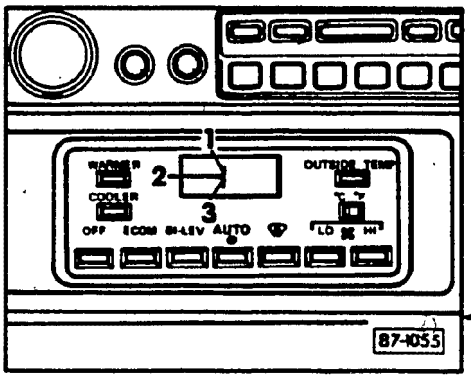

(A)

- switch engine **OFF**
- switch ignition **ON**
- set mode to **ECON**
- set temperature to **HI**
- set blower RPM to **HI**
- start diagnosis on channel 18

- does segment **3** (idle speed increase) light up?

Yes	No

No → replace A/C control head → End

Yes →

- set mode to **ECON**
- set temperature to **HI**
- set blower RPM to **LO**
- start diagnosis on channel 18

- does segment **3** (idle speed increase) light up?

Yes	No

Yes → replace A/C control head → End

No →

- measure voltage between cavities **23** and **25** on A/C control head connector

less than 8V	greater than 8V

- less than 8V → Go to (B) next page
- greater than 8V → Go to (C) two pages following

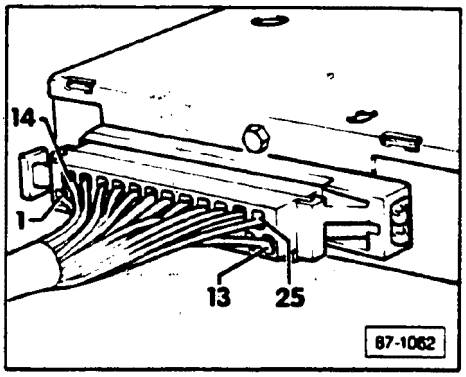

cardiagn.com

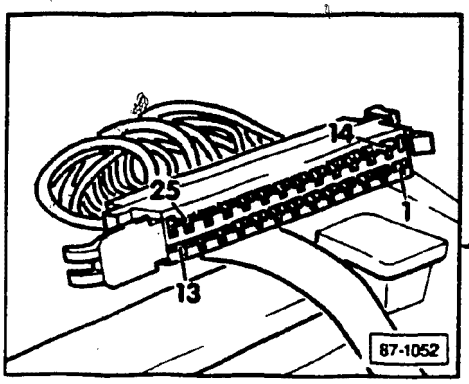

(B)

- remove A/C control head connector
- measure current between cavities **23** and **7** on connector

• greater than 10 mA	• less than 10 mA

- check wiring from cavity **23** on A/C control head connector to cavity **6** of idle stabilizer control unit for open or short circuits according to wiring diagram

• wiring **OK**

No	Yes

- repair as necessary

End

Errors not in the area of climate control (check engine electronics)

- replace A/C control head

End

cardiagn.com

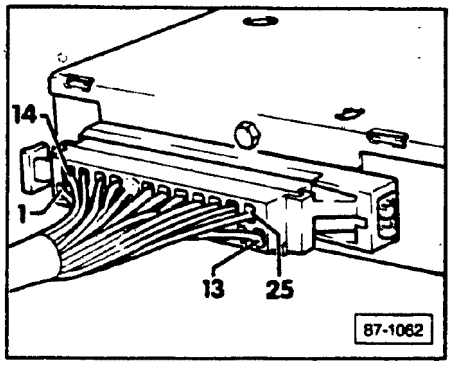

Ⓒ

- set mode to **ECON**
- set temperature to **HI**
- set blower speed to **HI**
- measure voltage between cavities **23** and **25** on A/C control head connector

• less than 3V	• greater than 3V

- check wiring from cavity **23** on A/C control head connector to idle stabilizer control unit cavity **6** for open circuit according to wiring diagram

• open circuit

Yes	No

- repair wiring as necessary

End

Errors not in the area of climate control (check engine electronics)

- separate 2-point connector between A/C control head cavity **23** and idle stabilizer control unit
- measure current between cavity **23** of A/C control head and the idle stabilizer control unit at the disconnected connector according to wiring diagram

• greater than 3 mA	• less than 3 mA

Go to Ⓓ next page

Go to Ⓔ next page

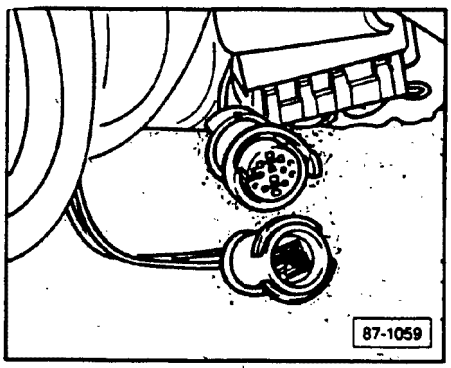

cardiagn.com

(D)

- check wiring from 2-point connector to idle stabilizer control unit cavity **6** for short circuit according to wiring diagram
  - short circuit

Yes	No
repair wiring as necessary → End	Errors not in the area of climate control (check engine electronics)

(E)

- check wiring between 2-point connector and A/C control head connector cavity **23** for ground short circuit
  - short circuit

Yes	No
repair wiring as necessary → End	replace A/C control head → End

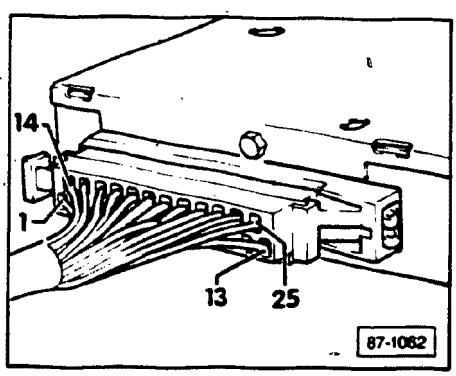

cardiagn.com

Ⓕ

- switch ignition **ON**
- adjust A/C control head back and forth between **AUTO** and **ECON** modes (wait 10 seconds between each change)

- magnetic clutch clicks

Yes	No
	Go to section D8-120 (compressor does not run)

- start engine
- set mode to **AUTO**
- set temperature to **LO**
- set blower speed to **LO**

- RPM increases and decreases as A/C thermostat switches the magnetic clutch **ON** and **OFF**

Yes	No
End	

- switch ignition **OFF**
- remove connector from fuel injection control unit or idle stabilizer control unit (depending on vehicle)

- switch ignition **ON**
- set mode to **AUTO**

On vehicles with CIS-E-III fuel injection

- measure voltage at cavity **33** to ground

or

On vehicles with CIS fuel injection

- measure voltage at cavity **2** to ground

greater than 8V	less than 8V
Go to Ⓖ next page	■ repair wiring as necessary End

cardiagn.com

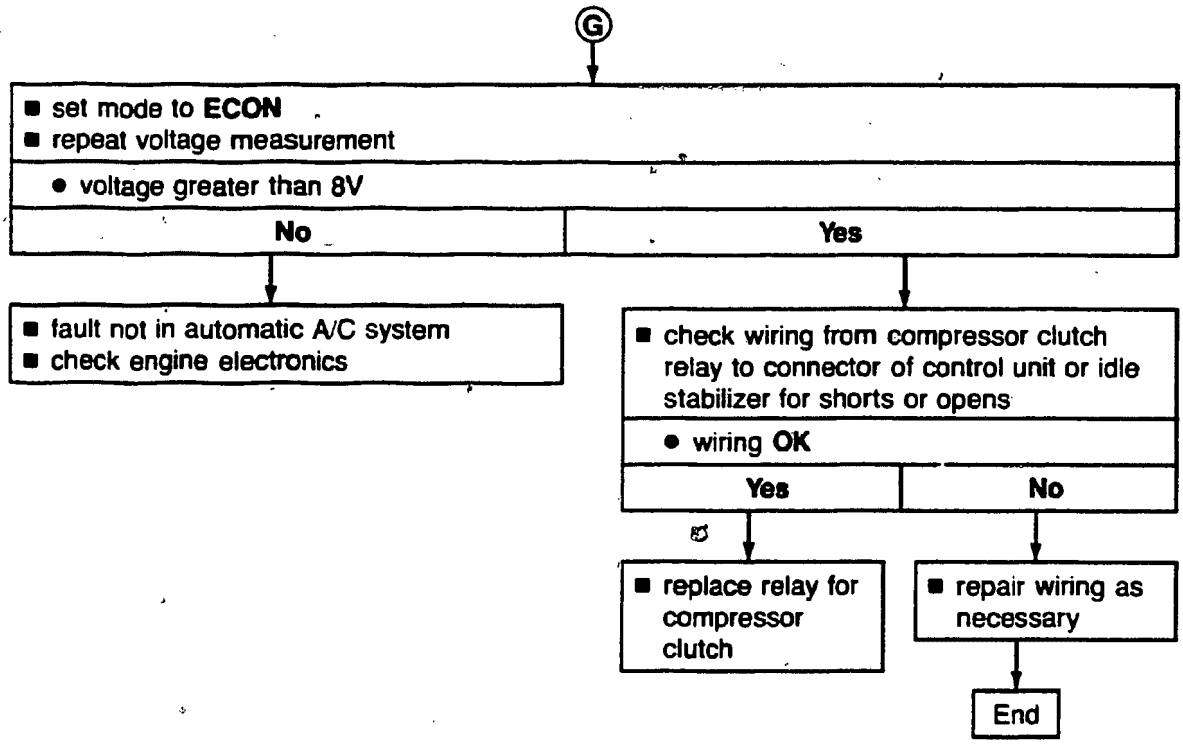

cardiagn.com

A/C cooling performance, checking

Note

Before each new test sequence

- switch ignition **OFF**
- start engine
- set mode to **ECON**
- set temperature to **LO**
- set blower to **HI**
- run in this condition approximately 5 minutes

Test conditions

- all fuses **OK**
- ambient temperature greater than 15°C (59°F)
- condenser and radiator are clean
- V-belts for compressor and alternator are tightened correctly
- all air ducts, covers and seals are **OK** and correctly installed
- vehicle is not exposed to direct sun
- engine warm

With engine running

- set mode to **AUTO**
- set temperature to **LO**
- set blower speed to **HI**
- open instrument panel outlets:
  - compressor is driven or switches **ON**
  - fresh air blower runs
  - radiator cooling fan runs
  - recirculation/fresh air flap goes into "recirculation" position after 1 minute
  - water valve for heating is closed
  - evaporator, heater, and connecting piece between heater and evaporator do not draw any secondary air
  - air comes out of the instrument panel outlets
  - temperature flap is in "cooling" position (see section D8-60)

cardiagn.com

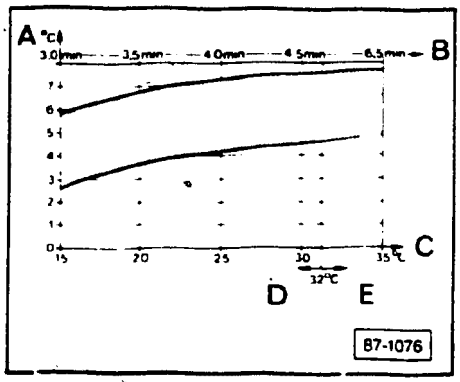

Testing

The temperature of the air coming out of the center instrument panel outlets must be within the tolerance and depends on the ambient temperature and cool-down period.

A — Temperature of air from center instrument panel outlets
B — Time
C — Ambient temperature
D — Doors opened
E — Doors, windows, and sunroof closed

more

cardiagn.com

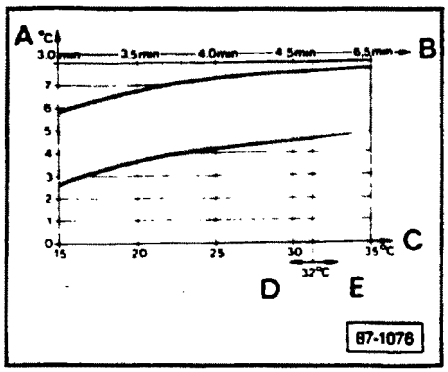

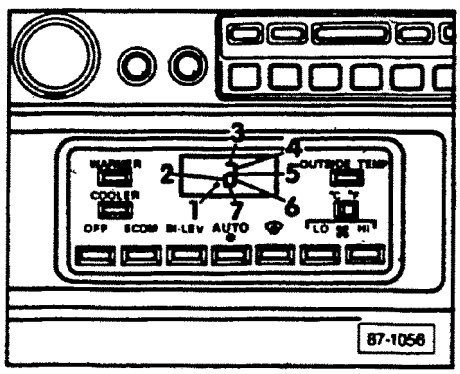

- close hood
- open all instrument panel outlets
- measure outside temperature

• greater than 32°C (89°F)	• less than 32°C (89°F)
■ close windows, doors, and sunroof	■ open doors

- start engine
- set mode to **ECON**
- set temperature to **LO**
- wait 1 minute
- set mode to **AUTO** (start of time measurement)
- set blower speed to **HI**
- start diagnosis on channel 17
- bring engine speed up to 2000 RPM
- measure temperature of air coming out of center instrument panel outlets

- during cooling performance test, the A/C control head switches the A/C compressor **OFF**
- segment **1** erased on display and one of segments **2-7** lights up

Yes	No

- segment **2** lights up
  Go to section D8-230
- segment **3** lights up
  Go to section D8-240
- segment **4** lights up
  Check electrical system voltage
- segment **5** lights up
  Go to section D8-270
- segment **6** lights up
  Go to section D8-280 (through 1990 m.y.) or D8-290 (from 1991 m.y.)
- segment **7** lights up
  Go to section D8-300

- required cooling obtained

Yes	No
End	Go to Ⓐ next page

cardiagn.com

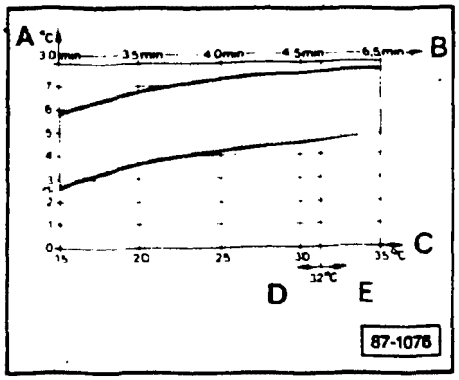

(A)

- switch engine **OFF**
- switch ignition **ON**
- bridge A/C high-pressure switch (green housing)

- radiator cooling fan runs at 2nd speed

Yes	No

Yes

- remove A/C refrigerant high pressure switch (green housing) connector
- bridge A/C thermostat terminals
- connect A/C pressure gauges
- repeat cooling performance test

- the radiator cooling fan is switched to 2nd speed by the high-pressure switch when pressure is maximum 17.5 bar (253.7 psi) (time of activation is a function of ambient temperature and engine speed)

No	Yes

No

- check the following components and their wiring according to wiring diagram:
  - radiator cooling fan series resistance
  - radiator cooling fan
  - radiator cooling fan 2nd speed relay

- repair/replace as necessary

End

- required cooling performance is achieved

No	Yes

No

- replace A/C high-pressure switch (green housing)

End

Yes

- replace A/C thermostat

End

- repair refrigerant system (too little refrigerant in system)
- replace restrictor

cardiagn.com

Index

2-wheel drive

Identification
- engine number location 00.3
- towing 00.14
- transmission (automatic) 00.7
- transmission (manual) 00.10
- type/model 00.2
- VIN location 00.3

Lifting vehicle with hoist/floor jack
★ ■ lifting points 00.15a

Technical data
- engine chart 00.4

Tune-up specifications
- engine code 3A/NG 00.16

Quattro

Identification
- engine number location 00.3
- rear final drive 00.12
- towing 00.15
- transmission 00.11
- type/model 00.2
- VIN location 00.3

Lifting vehicle with hoist/floor jack
★ ■ lifting points 00.15a

Technical data
- engine chart 00.4
- engine chart (Coupe) 00.6
- rear differential chart 00.13

Tune-up specifications
- engine code 7A 00.18

★ NEW INFORMATION since last filming

cardiagn.com

Type and model identifications

Model code	Model years	Designation USA	Designation Canada	Body style	Trans	Engine code*
893 4L4	1988-1989	80		4-Door	5-Spd	3A
893 4L3	1988-1989	80		4-Door	Auto.	3A
894 4B5	1988	80 Quattro		4-Door	5-Spd	NG
893 4B5	1989					
893 5B4	1988-1989	90		4-Door	5-Spd	NG
893 6B4 (Canada)	1989		90			
893 5L3	1988	90	90	4-Door	Auto.	3A
893 5B3	1989					
893 6B3 (Canada)						NG (Canada)
894 5B5	1988	90 Quattro	90 Quattro (1989 M.Y. only)	4-Door	5-Spd	NG
893 5B5	1989					
893 6B5 (Canada)						
8A2 4L3	1990	80		4-Door	Auto. 49-State	3A
8A2 4B8	1991					NG
8A2 4L4	1990	80		4-Door	5-Spd 49-State	3A
8A2 4B4	1991					NG
8A2 4W3	1990	80		4-Door	Auto. Calif	3A
8A2 4N8	1991					NG
8A2 4W4	1990	80		4-Door	5-Spd Calif.	3A
8A2 4N4	1991					NG
8A2 4B5	1990-1991	80 Quattro		4-Door	5-Spd 49-State	NG
8A2 4N5	1990-1991	80 Quattro		4-Door	5-Spd Calif.	NG
8A2 5B4	1990	90		4-Door	5-Spd 49-State	NG
	1990-1991		90		Canada	
8A2 5B3	1990	90		4-Door	5-Spd Calif.	NG
8A2 5B3	1990	90	90	4-Door	Auto. 49-State, Canada	NG
8A2 5B8	1991					
8A2 5N3	1990	90		4-Door	Auto. Calif.	NG
8A2 5N8	1991					
8A2 5T5	1990-1991	90 Quattro	90 Quattro 20V	4-Door	5-Spd 49-State, Canada	7A
8A2 5U5	1990-1991	90 Quattro		4-Door	5-Spd Calif.	7A
8B3 4T5	1990-1991	Coupe Quattro 20V	Coupe Quattro 20V	2-Door	5-Spd 49-State, Canada	7A
8B3 4U5	1990-1991	Coupe Quattro 20V		2-Door	5-Spd Calif.	7A

* Engine Code	KW @ RPM (BHP)
3A (4-Cyl)	83 @ 5300 (108)
NG (5-Cyl)	100 @ 5700 (130)
7A (5-Cyl 20V)	125 @ 6000 (162)

cardiagn.com

Assemblies	Type	Code letters	BHP net (SAE)	RPM
Engine 2.0 Liter (CIS-Motronic)	—	3A	108	5300
Engine 2.3 Liter (CIS-E III)	—	NG	130	5700
Engine 2.3 Liter (MPI)	—	7A	162	6000
5-Speed Manual Transmission (Audi 80)	012	AKL AUF	— —	— —
5-Speed Manual Transmission (Audi 90)	012	ALP	—	—
Automatic Transmission (Audi 90)	087	RBP	—	—
Automatic Transmission (Audi 80)	089	KAU	—	—
4-Speed Automatic Transmission (Audi 90-1991 m.y.)	097	AEL	—	—
5-Speed Manual Transmission (80 Quattro)	01A	AKT	—	—
5-Speed Manual Transmission (90 Quattro)	01A	AKU	—	—
5-Speed Manual Transmission (Coupe Quattro)	01A	ASZ	—	—

CAUTION
QUATTRO TRANSMISSIONS

When checking engine performance, only use dynamometer designed to brake all four wheels at the same time.

cardiagn.com

Vehicle identification

Vehicle Identification Number (VIN)

- on instrument panel on driver's side visible from the outside through the windshield
- on identification label in luggage compartment

Engine number, 4-cylinder

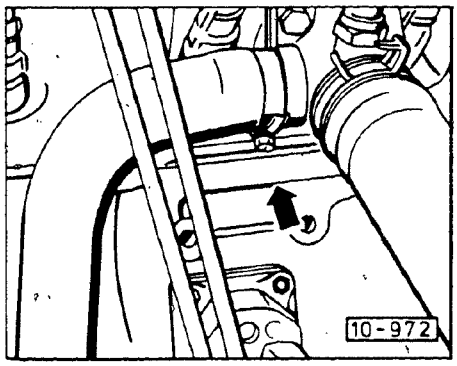

- the engine number is stamped on the left-hand side of the cylinder block (**arrow**)

Engine number, 5-cylinder

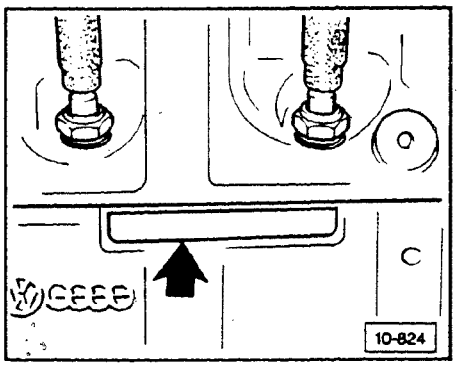

- the engine number is stamped on the left hand side of the cylinder block (**arrow**)

cardiagn.com

Technical data, engine

		2.0L engine — gasoline	2.30L engine — gasoline	2.30L engine — gasoline
Engine code letters		**3A**	**NG**	**NG**
Start of production	from	9/87	10/87	since 4/89
Cylinders	no.	4	5	5
Displacement	liters	2.0	2.30	2.30
Output	KW @ RPM (BHP)	83/5300 (108)	100/5700 (130)	100/5700 (130)
Torque	Nm @ RPM (ft lb)	170/3250 (121)	190/4500 (140)	190/4500 (140)
Bore	bore 0 mm	82.5	82.5	82.5
Stroke	mm	92.8	86.4	86.4
Compression ratio	:1	10.4:1	10.0	10.0
Valve timing at 1mm valve lift and zero clearance	inlet opens Before TDC	After TDC 3°	0°	3.9°
	inlet closes After BDC	43°	41.0°	41.2°
	outlet opens Before BDC	37°	40.0°	45.9°
	outlet closes Before TDC	3°	1.0°	4.9°
AKI (Anti Knock Index) $\frac{R + M}{2}$	minimum	87 (lead-free)	87 (lead-free)	87 (lead-free)
	recommended	91 (lead-free)	91 (lead-free)	91 (lead-free)
Fuel injection		CIS Motronic	CIS-E III	CIS-E III
Exhaust gas recirculation		No	No	No
Catalytic convertor		Yes	Yes	Yes
Oxygen regulation		Yes	Yes	Yes
Turbocharger		No	No	No
Deceleration cutout		Yes	Yes	Yes

cardiagn.com

Technical data, engine

Engine code letters	**7A**
Start of production	4-88
Number of cylinders	5
Cubic displacement	2.3 liters
Bore	82.5 mm (3.25 in)
Stroke	86.4 mm (3.40 in)
Compression	10:1
Firing order	1-2-4-5-3
Horsepower (SAE BHP)	162 at 6000 rpm
Torque	162 ft lb at 4500 rpm
Valve timing Intake valve opens before **TDC** Intake valve closes after **BDC** Exhaust valve opens before **BDC** Exhaust valve closes before **TDC**	 6° 38° 42° 3°
RON (AKI)	95 (91)
Fuel system	**MPI** (Multi Point Injection)

cardiagn.com

Automatic transmission (087), identifying

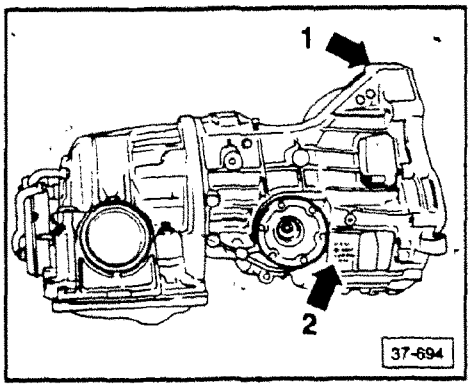

Location

1 = transmission code letters and date of production
2 = transmission type no.

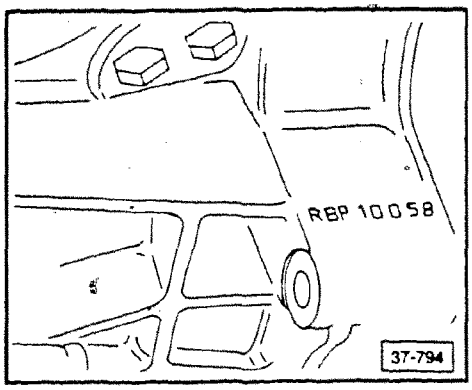

Transmission code letters and date of production

Example:

RBP	**10**	**05**	**8**
code	day	month	year (88)

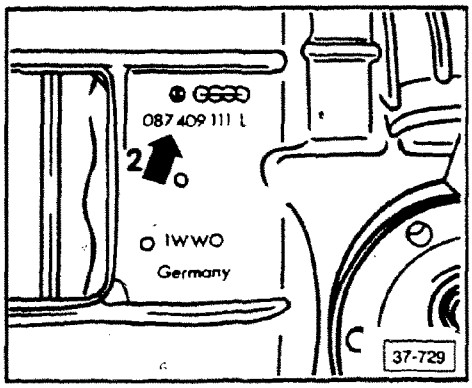

Transmission type no. (arrow)

Note

Transmission code also listed on Vehicle Identification Label.

cardiagn.com

Automatic transmission (089), identifying

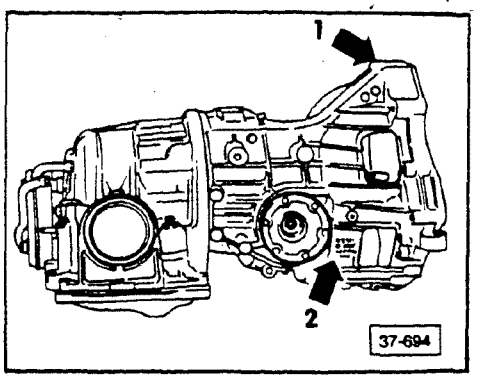

Location

1 = transmission code letters and date of production
2 = transmission type no.

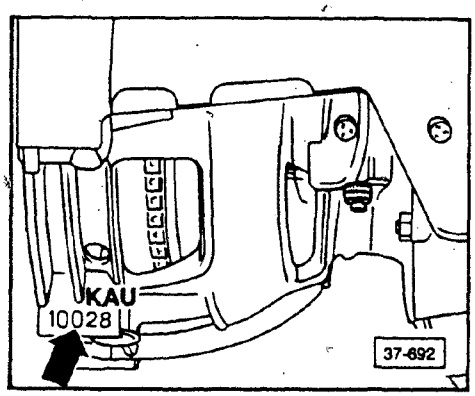

Transmission code letters and date of production

Example:

KAU	10	02	8
code	day	month	year (88)

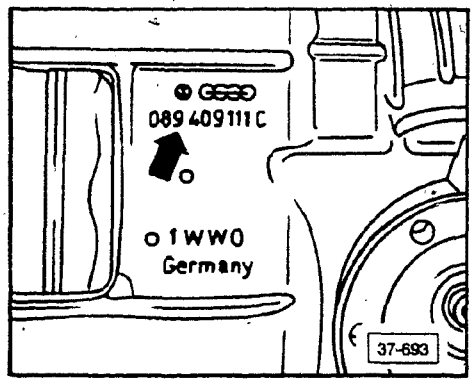

Transmission type no. (arrow)

Note

Transmission code also listed on Vehicle Identification Label.

cardiagn.com

Automatic transmission (097), identifying

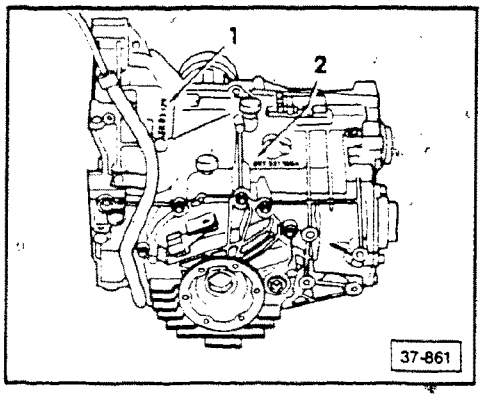

Location

1 = transmission code letters and date of production
2 = transmission type no.

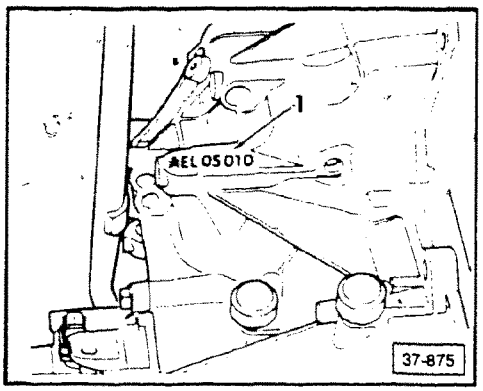

Transmission code letters and date of production

Example:

AEL	**05**	**01**	**0**
code	day	month	year (90)

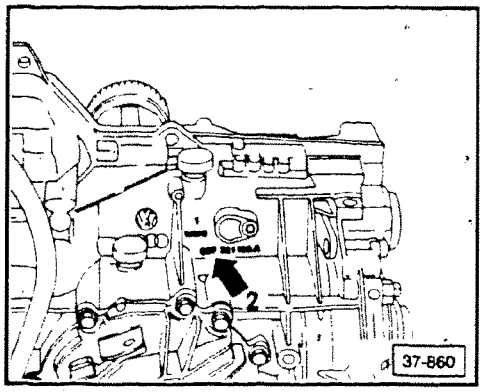

Transmission type no. (arrow)

Note

Transmission code also listed on Vehicle Identification Label.

cardiagn.com

Manual transmission (012), identifying

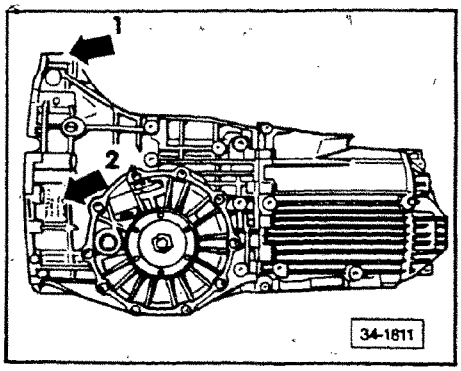

Location

1 = transmission code letters and date of production
2 = transmission type no.

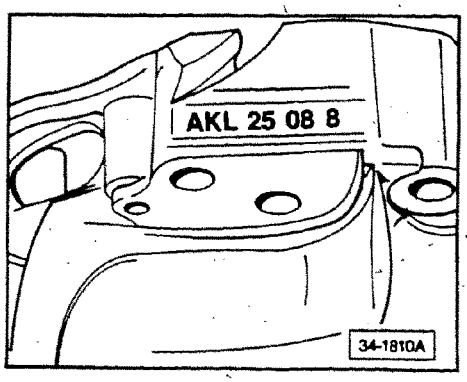

Transmission code letters and date of production

Example:

AKL (or **AUF**) code	**25** day	**08** month	**8** year (88)

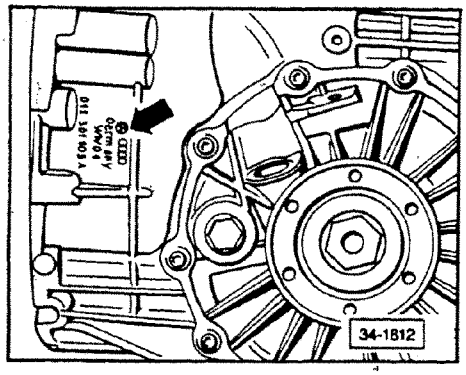

Transmission type no. (arrow)

Note

Transmission code also listed on Vehicle Identification Label.

cardiagn.com

Manual transmission 01A, identifying

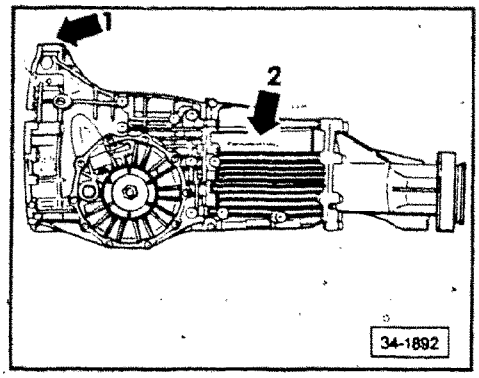

Location

1 = transmission code letters and date of production
2 = transmission type no.

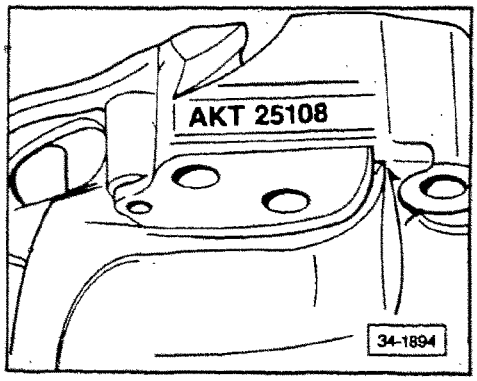

Transmission code letters and date of production

Example:

AKT (or **AKU**) code	**25** day	**10** month	**8** year (88)

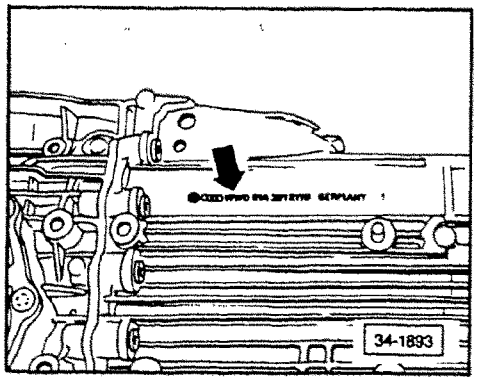

Transmission type no. (arrow)

Note

Transmission code also listed on Vehicle Identification Label.

cardiagn.com

Rear final drive — Quattro, identifying

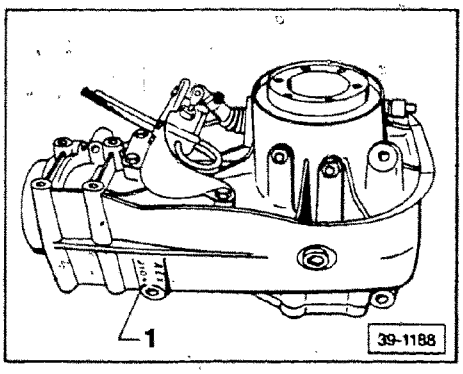

Location

1 = rear final drive code letters and date of production

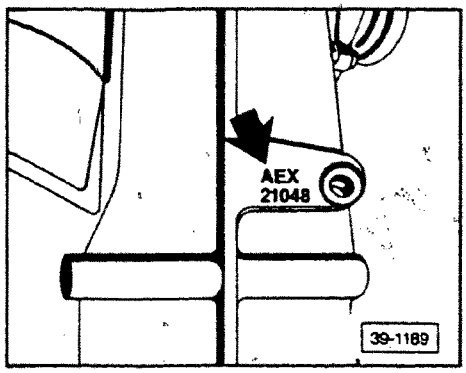

Rear final drive code letters and date of production

Example:

AEX (or **AEC**) code	**21** day	**04** month	**8** year (88)

cardiagn.com

Technical data, rear differential

Code		AEX	AEC
Production	from:	06/86	06/86
Arrangement	Type	Audi 80 Quattro	Audi 90/Coupe Quattro
	Engine	2.0 liter 83 kW (108 hp)	2.3 liter 101 kW 2.3 liter 125 kW (20V)
	Standard Transmission	AKT	AKU ASZ
Ratio	Differential	41:9 = 4.556	37:9 = 4.111
Filler amount		0.75 liter (0.79 qt)	
Specification		Transmission oil GL 5 (MIL-L 2105 B) SAE 90	
Drive shaft flange		90 mm	100 mm

cardiagn.com

Towing

CAUTION

- the Audi 80/90 cannot be towed with conventional sling-type equipment or wheel dollies. Towing with this type of equipment will cause bumper and body panel damage
- if an automatic transmission vehicle must be towed, the front wheels must be lifted to avoid damage to transmission due to lack of lubrication

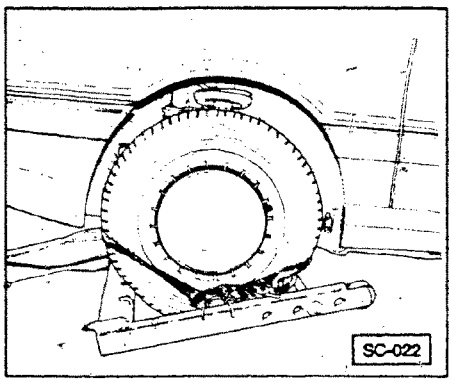

Front hook-up

- attach wheel lift equipment to wheels
- attach safety straps to wheels
- towing clearance: 6-12 inches between tires and ground
- towing speed/miles:
  manual transmission: 50 mph/50 mi
  automatic transmission: 50 mph/50 mi

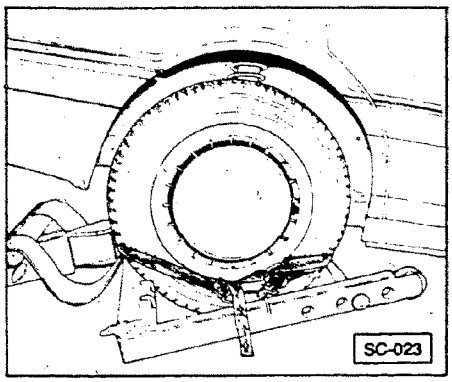

Rear hook-up

- attach wheel lift equipment to wheels
- attach safety straps to wheels
- towing clearance: 6-12 inches between tires and ground
- towing speed/miles:
  manual transmission: 50 mph/50 mi
  automatic transmission: 0 mph/0 mi

cardiagn.com

Towing

CAUTION

- the Coupe Quattro cannot be towed with conventional sling-type equipment or wheel dollies. Towing with this type of equipment will cause bumper and body panel damage
- differential must be unlocked during towing. Consult owners manual for unlocking information
- DO NOT exceed 30 mph or tow further than 30 miles
- if towing distance is more than 30 miles, vehicle must be flat bedded
- use towing loop in tool kit and attach below right front or right rear bumper to load Coupe onto flat bed

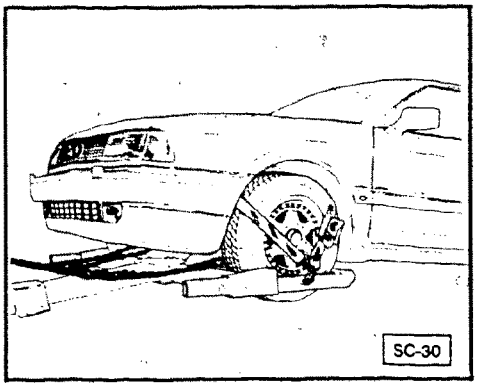

Front hook-up

- attach wheel lift equipment to wheels
- attach safety straps to wheels
- attach safety chains to lower control arms
- towing clearance: 6-12 inches between tires and ground
- towing speed/miles:
  manual transmission: 30 mph/30 miles

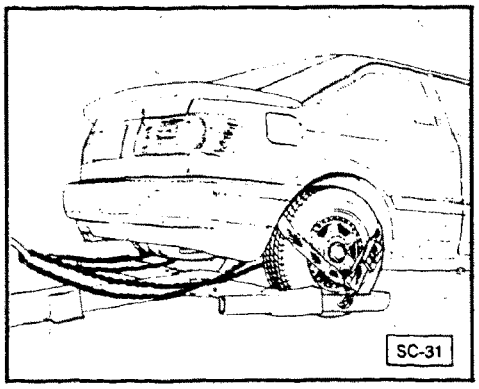

Rear hook-up

- attach wheel lift equipment to wheels
- attach safety straps to wheels
- attach safety chains to subframe
- towing clearance: 6-12 inches between tires and ground
- towing speed/miles:
  manual transmission: 30 mph/30 miles

cardiagn.com

Lifting vehicle with hoist/floor jack

WARNING
When removing components such as rear axle, fuel tank, spare wheel and rear lid, place additional weight on rear end of car or anchor car to hoist to prevent tipping if center of gravity changes.

CAUTION
Before driving onto lift, check for clearance between lifting arms and tires to avoid cutting sidewalls.

Extend arms and check to see if arms are long enough to contact lifting points.

Lift only at points shown.

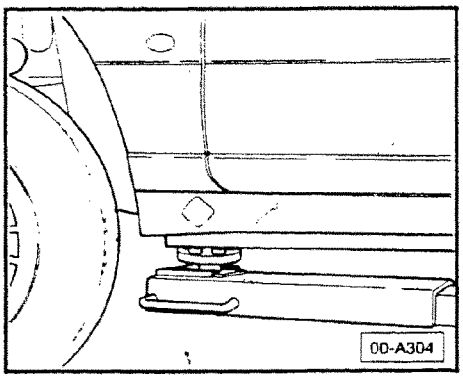

Front

Lift points are located on the underbody, where the door hinge pillar is welded to the chassis frame rail, below the diamond shaped mark.

CAUTION
Do not lift vehicle by engine, transmission, front or rear suspension. Doing so may result in damage to components.

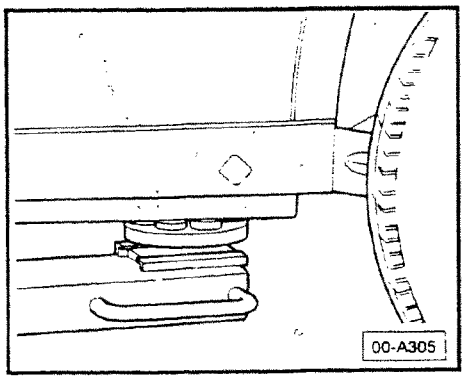

Rear

Lift points are located below the diamond shaped mark in front of the rear wheel well.

Take care to avoid damaging critical componets which are close to the lift points. This applies especially to the electric fuel pump.

Note

Lifting vehicle with floor jack

The same lifting points as illustrated for the hoist also apply when using a floor jack. To avoid damage to the underbody or chassis frame, it is necessary to insert a rubber pad between the floor jack and the lift points.

cardiagn.com

Tuneup specifications

From 1988 m.y.

Engine code		3A
Type fuel/ignition system		CIS-E Motronic
CIS-E Motronic (combined fuel/ignition)		893 907 404
Ignition distributor		053 905 205A
RPM cutoff (upper limit) (via CIS-E Motronic control unit)		6400 ± 100 RPM
Ignition timing	checking value	4° - 8° Before TDC
	adjusting value	6° ± 1° Before TDC see idle adjustment, Group 25
Firing order		cylinders 1-3-4-2
Spark plugs	Bosch	W7DTC
	electrode gap mm (in.)	0.8 ± 0.1 (0.031 ± 0.004)
	tightening torque Nm (ft lb)	20Nm (15 ft lb)
Idle RPM (**NOT** adjustable, controlled by idle stabilization system)		840 ± 60
CO-content (measured at CO tap with oxygen sensor connected)		0.3 - 1.2 vol % Adjustment performed via differential pressure regulator control current adjustment.

CAUTION

Part numbers are for reference only. Always consult with the Parts Department for the latest information.

CAUTION

Idle speed, ignition timing and CO are interrelated and **must** be checked and adjusted together.

cardiagn.com

Tuneup specifications

From 1988 mfg.

Engine code		NG
Fuel injection control unit	49 states**	443 906 264 C
	California**	443 906 264 B
Ignition control unit	49 states**	443 907 397 C
	California**	443 907 397 E
Ignition distributor		034 905 205 H
RPM cutoff (upper limit) (via CIS-E III control unit)		6600 ± 100 RPM
Ignition timing	checking value	13-17° Before TDC
	adjusting value	15 ± 1° Before TDC
Timing mark location: ON flywheel		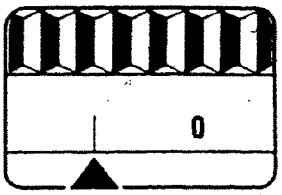 28-400
Firing order		1-2-4-5-3
Spark plugs	Bosch	W7DTC
	electrode gap mm (in.)	0.8 ± 0.1 (0.031 ± 0.004)
	tightening torque Nm (ft lb)	20Nm (15 ft lb)
Idle RPM*	manual transmission RPM	790 ± 70
	automatic transmission RPM	790 ± 70
CO-content (oxygen sensor probe disconnected)	checking value	0.3-3.0 vol. %
	adjusting value	0.6-1.0 vol. %

*Idle speed can **NOT** be adjusted using air screw on throttle body, idle is regulated by CIS-E III idle stabilization system.
**Do not mix 49 states control units with California control units or vise versa.

CAUTION

Part numbers are for reference only. Always consult with the Parts Department for the latest information.

CAUTION

Idle speed, ignition timing and CO are interrelated and **must** be checked and adjusted together.

cardiagn.com

Tuneup specifications

1990-1991 m.y.

Engine code letters		7A
Ignition distributor		034 905 205 J
Ignition distributor basic setting*		TDC
Timing mark, location		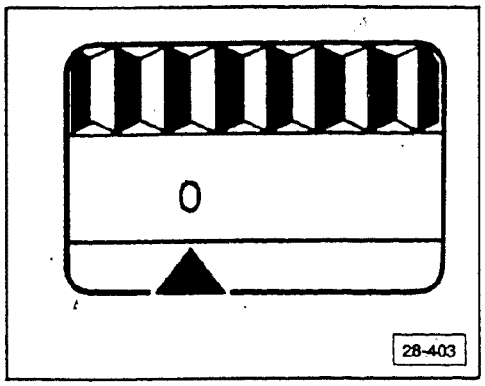
Ignition timing sensor**	resistance	approximately 1000 ohms
Engine speed sensor***	resistance	approximately 1000 ohms
CAUTION It is **NOT** possible to adjust the ignition timing. Ignition timing is determined by the control unit ignition map.		
Spark plugs	part no.	191 905 450 J
		Bosch F 6 DTC
Electrode gap Tightening torque		0.8 + 0.1 mm (0.031 + 0.004 in) 20 Nm (15 ft lb)
Firing order		1-2-4-5-3
RPM limit (cutout)		starts at 7200 RPM, completes at 7400 RPM
Ignition coil	secondary resistance	6500 to 8000 ohms
	primary resistance	approximately 0 to 1 ohm
Ignition distributor rotor	resistance	1000 ohms

*see section 28-250
**Ignition timing sensor, checking, section 28-230
***Engine speed sensor, checking, see Repair Group 24

CAUTION

Part numbers are for reference only. Always consult with the Parts Department for the latest information.

cardiagn.com

Tuneup specifications

1990-1991 m.y.

Engine code		**7A**
Ignition distributor		034 905 205 J
Timing mark location		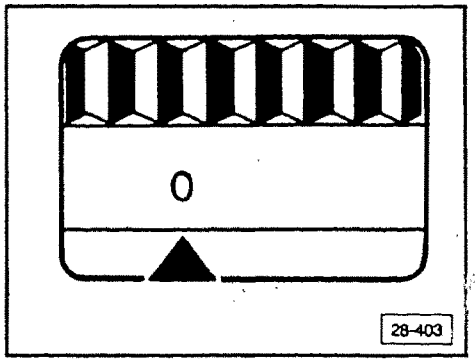
Ignition timing point		TDC
Ignition timing sender checking, section 28-300	resistance checking	approximately 1000 ohms
Engine speed sender checking, see Repair Group 24	resistance checking	approximately 1000 ohms
Spark plugs	part number electrode gap tightening torque	Bosch F 6 DTC 101 000 004 AA 0.8 ± 0.1 mm 20 Nm (15 ft lb)
Firing Order	Cylinder number	1-2-4-5-3
RPM limit		7200 ± 200 rpm
Resistance checking Ignition coil	Secondary resistance	6500 to 8000 ohms
	Primary resistance	0 to 1 ohm
Distributor rotor		approximately 1000 ohms

Note

Ignition timing is determined by the control unit map and feedback signals. Ignition timing is NOT adjustable.

Basic distributor adjustment see section 28-360

CAUTION

Part numbers are for reference only. Always consult with the Parts Department for the latest information.

cardiagn.com

Index

4-cylinder

Corrosion protection
- application **10.6**

Engine
- installing **10.3**
- removing **10.2**
- tightening torques **10.3**

5-cylinder

Corrosion protection
- application **10.6**

Engine
- installing **10.3**
- removing **10.2**
- tightening torques **10.5**

Coupe

Engine
- installing **10.16**
- removing **10.7**
- tightening torques **10.17**

cardiagn.com

NOTE

Remove engine from top without transmission

Do not disconnect

- wire to clutch operating cylinder
- hoses or brackets from power steering pump
- A/C hoses

CAUTION

Coolant/antifreeze **must not** be reused when replacing engine, cylinder head, cylinder head gasket, radiator and heater core.

Engine removing

- disconnect battery ground strap
- remove clutch operating cylinder on manual transmission
- remove radiator
  - save anti-freeze for reuse (see caution)
- remove power steering pump and attach to body
- remove compressor mounting bolts together with mount and move to one side

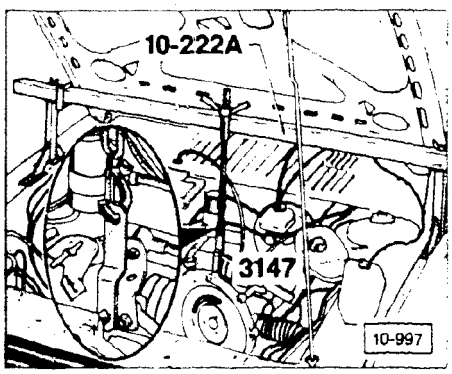

- prop up transmission with support **10-222A** transmission mount **3147**
- insert transmission mount **3147** in the upper hole for the engine/transmission mounting bolt (M 12)

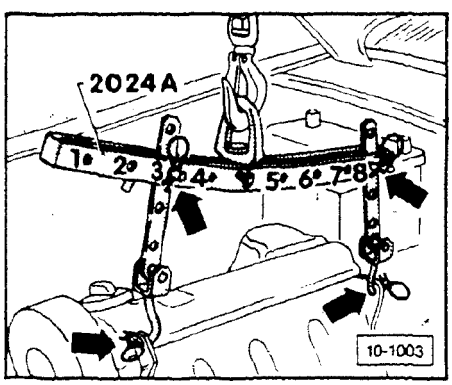

- attach engine sling as shown and take weight with crane

Pulley side lower (**left arrow**)
Third hole in vertical at position **3**

Flywheel side lower (**right arrow**)
Third hole in vertical bar at position **8**

The positions marked 1-4 on the bar must be towards the pulley side. The holes in the hooks are counted **upwards** from the hook.

CAUTION

Use cotter pins on hooks and holding pins (**arrows**) to secure tool.

CAUTION

Guide engine carefully when lifting to avoid damage to body.

cardiagn.com

Tightening Torques	
Cover plate to transmission/engine	10 Nm (7 ft lb)
Exhaust pipe front to transmission bracket	25 Nm (18 ft lb)
Control pressure regulator to engine block	10 Nm (7 ft lb)
Cold start valve to intake manifold	10 Nm (7 ft lb)
Front engine support to cylinder block	25 Nm (18 ft lb)
Engine bearing to engine support	35 Nm (26 ft lb)
Mounting bolts engine/transmission M 12	55 Nm (41 ft lb)
Radiator to rubber bonded bushing lower	10 Nm (7 ft lb)
Exhaust pipe to exhaust manifold	30 Nm (22 ft lb)
A/C compressor — bracket to cylinder block M 8:	25 Nm (18 ft lb)
M 10:	30 Nm (22 ft lb)

Engine, installing

Install in reverse order of removal. Note the following:

- check clutch release bearing for wear, replace if necessary
- lubricate clutch release bearing, driveshaft lightly with MoS_2 grease
- check and ensure that the dowels for centering engine/transmission are in cylinder block
- replace self-locking nuts for engine mounts

- lower engine onto mounts
- loosely install self-locking nuts for engine mounts
- rock or shake engine on mounts to align
- adjust accelerator cable (see repair group 20)
- reconnect all electrical connections (see repair group 97)

- fill coolant (see repair group 19)
- check and adjust engine oil level (see repair group 17)
- adjust engine timing/idle (see repair group 25, 28)
- align exhaust system, without tension (see repair group 26)

cardiagn.com

NOTE

Remove engine from top without transmission.

Do not disconnect

- wire to clutch operating cylinder
- hoses or brackets from power steering pump
- A/C hoses

CAUTION

Coolant/antifreeze **must not** be reused when replacing engine, cylinder head, cylinder head gasket, radiator and heater core.

Engine, removing

- disconnect battery ground strap
- on manual transmission vehicles, disconnect clutch operating cylinder
- remove power steering pump (**with hoses connected**) and attach to body
- remove compressor mounting bolts together with mount and move to one side
- tie compressor back with wire
- disconnect radiator hoses
  - save anti-freeze for reuse (see caution)
- remove radiator, cowling and fan
- remove bumper (see group 63)
- remove center apron, lower crossmember
- remove left upper engine/transmission bolt

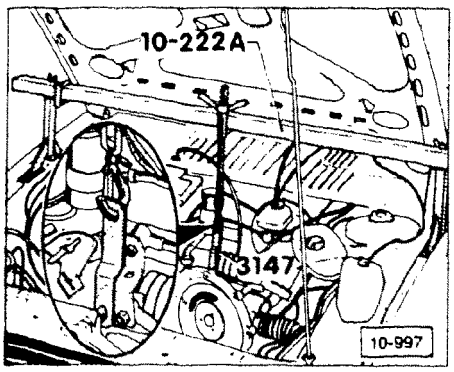

- remove distributor cap, lay to side
- position tool **10-222A**
- place tool **3147** into position without damage to ignition wires
- insert tool **3147** into empty hole
- position support bar **10-222A** on inner fender mounting area
- attach draw hook as shown
- raise/lower transmission with wing nut to desired height

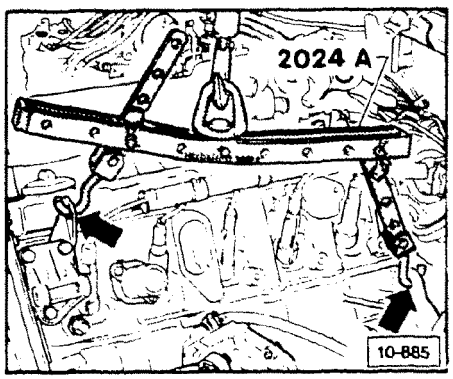

- attach engine sling as shown and take weight with crane

Pulley side (**left arrow**)
First hole in vertical at position 3.

Flywheel side (**right arrow**)
Fourth hole in vertical bar at position 8

The positions marked 1-4 on the bar must be towards the pulley side. The holes in the hooks are counted **upwards** from the hook.

CAUTION

Use cotterpins on hooks and holding pins (**arrows**) to secure tool.

CAUTION

Guide engine carefully when lifting to avoid damage to body.

cardiagn.com

Tightening torques	
Engine to transmission	
M 8	20 Nm (15 ft lb)
M 10	45 Nm (33 ft lb)
M 12	56 Nm (41 ft lb)
Exhaust pipe to transmission bracket	25 Nm (18 ft lb)
Exhaust pipe to exhaust manifold	35 Nm (26 ft lb)
Front engine support to body	70 Nm (53 ft lb)
Torque reactor to engine	45 Nm (33 ft lb)
Engine support to engine bearing	45 Nm (33 ft lb)
Stop collar to cross support lower	45 Nm (33 ft lb)
Alternator to engine M 10	45 Nm (33 ft lb)
Alternator to engine M 8	35 Nm (26 ft lb)
Power steering pump	20 Nm (15 ft lb)

Engine, installing

Install in reverse order of removal. Note the following:

- check clutch release bearing for wear, replace if necessary
- lubricate clutch release bearing, driveshaft lightly with MoS_2 grease
- check and ensure that the dowels for centering engine/transmission are in cylinder block
- replace self-locking nuts for engine mounts

- lower engine onto mounts
- loosely install self-locking nuts for engine mounts
- rock or shake engine on mounts to align
- adjust accelerator cable (see repair group 20)
- reconnect all electrical connections (see repair group 97)

- fill coolant (see repair group 19)
- check and adjust engine oil level (see repair group 17)
- adjust engine timing/idle (see repair group 25, 28)
- align exhaust system, without tension (see repair group 26)

cardiagn.com

Corrosion protection, engine

WARNING

Follow all application and safety instructions on labels.

Note

When washing the engine compartment, only use commercially available grease cutting solvents made especially for this purpose.

If it becomes necessary to steam clean or wash the engine compartment, the wax-based protective coating is usually lost.

Reapply wax-based protective coating using Preservative wax **AKR 321 M15 4** (transparent), **AKR 321 M16 10** (transparent) or equivalent, to all engine compartment panels, seams, flanges, cavities and engine assembly surfaces.

CAUTION

Part numbers are for reference only. Always check with your Parts Department for latest parts information.

cardiagn.com

Engine, removing

- disconnect battery wiring, loosen battery hold down and remove battery
- remove upper radiator trim
- remove sound absorber pan beneath radiator

- remove shroud bracket from transmission mount
- place drain pan under vehicle
- unfasten coolant hose on radiator and drain coolant

> **CAUTION**
>
> Do not re-use engine coolant, replace with a fresh mixture.

- remove radiator grille, see Group **66**
- (vehicles with A/C) unclip the outside temperature sensor from radiator grille

- remove front bumper, see Group **63**
- unhook release cable from hood, see Group **55**

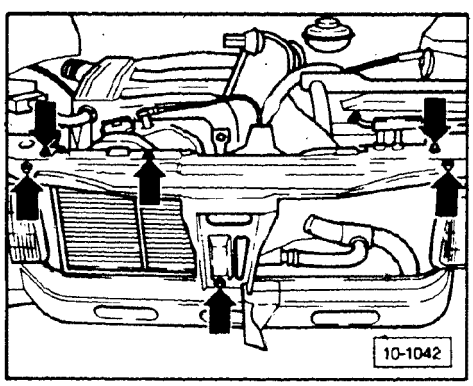

- remove radiator (upper) cross member

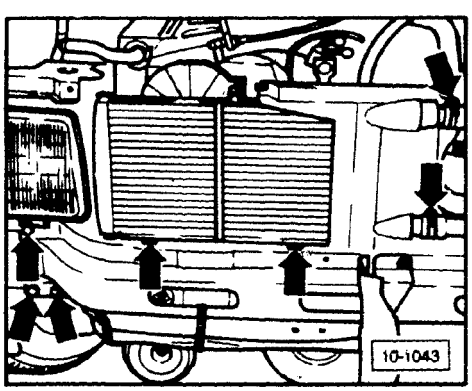

- remove auxiliary coolant radiator
- unclip wiring harness from lower cross member
- remove lower cross member

cardiagn.com

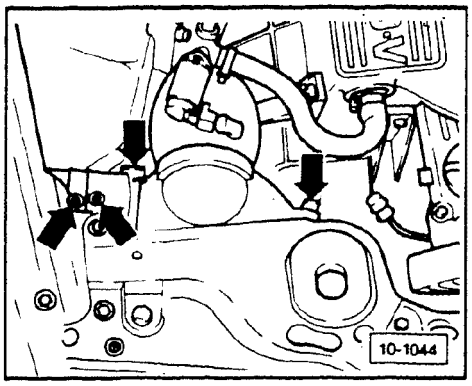

- remove intake hose
- unfasten cover for intake hose housing
- pull out housing from top

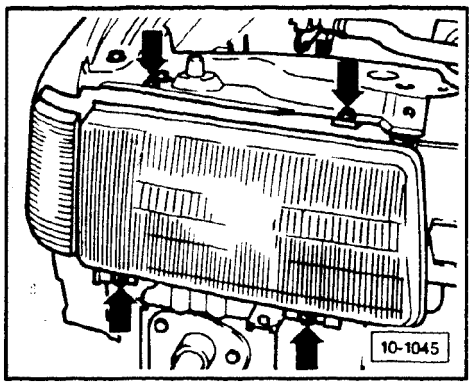

Removing right headlamp

- remove harness connector for turn signal and headlamps, leave wires exposed

Note

When re-assembling headlamp first reconnect harness connectors for the turn signal and headlamp before re-inserting headlamp.

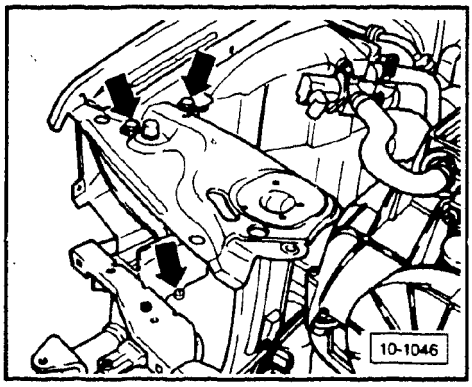

- remove upper radiator support, right

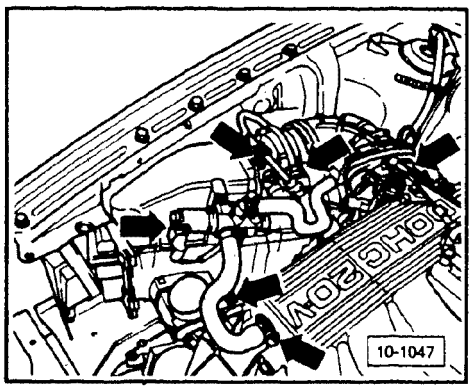

- disconnect clamp from wiring harness to air flow sensor
- disconnect harness connector from air flow sensor
- remove harness connector from idle stabilizer valve

cardiagn.com

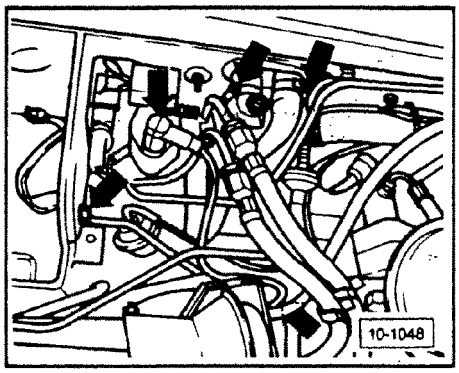

- disconnect pre-heater hose from air filter to heat stove
- loosen hose clamp
- remove air filter housing mounting bolt
- remove air filter housing assembly complete with air flow sensor and intake air boot

- disconnect high tension lead between distributor and ignition coil
- unclip distributor cap

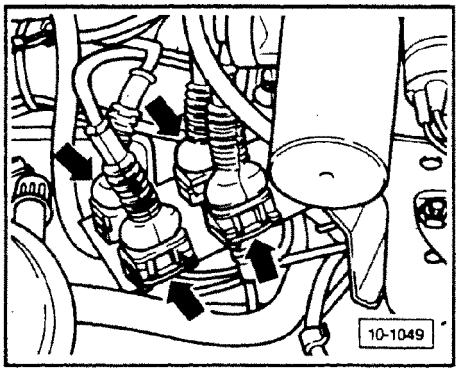

- disconnect Hall sender harness connector at distributor
- remove battery ground cable
- disconnect coolant hoses to heater core

- separate harness connectors on fire wall for engine speed sensor (gray), ignition timing reference sensor (black), and both knock sensors (red, white)

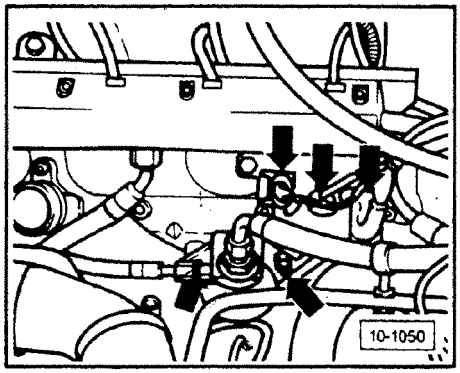

- disconnect harness connectors (upper **arrows**)
- disconnect fuel pressure regulator

cardiagn.com

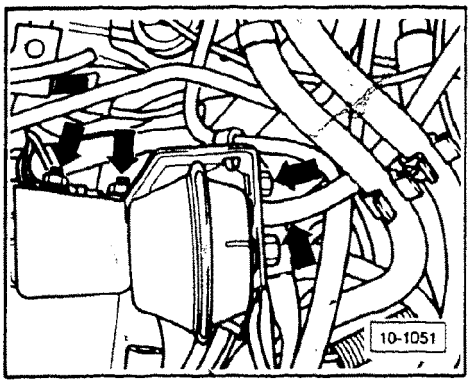

- remove clamp on cruise control bracket
- disconnect ground wires
- remove vacuum hose

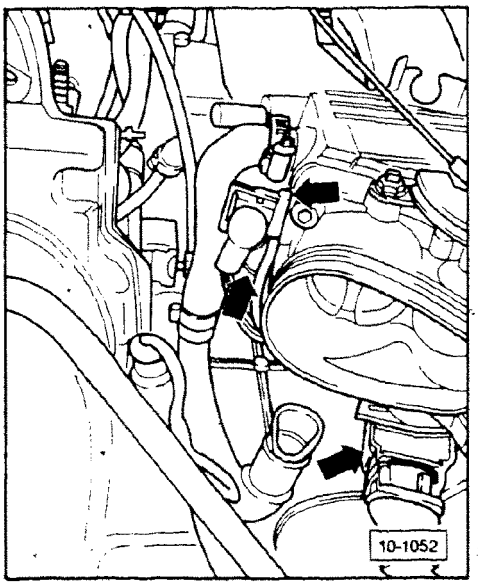

- disconnect throttle potentiometer harness connector, idle switch and thermoswitch fan afterrun

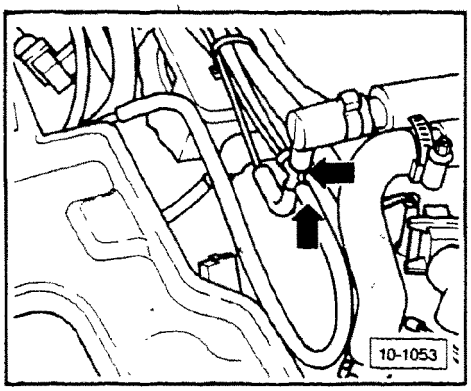

- remove vacuum lines

Note

If tie wraps are removed, new ones must be installed in the original locations.

cardiagn.com

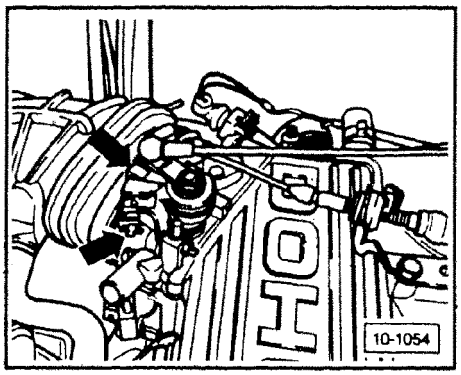

- unclip accelerator cable from throttle and let hang to one side

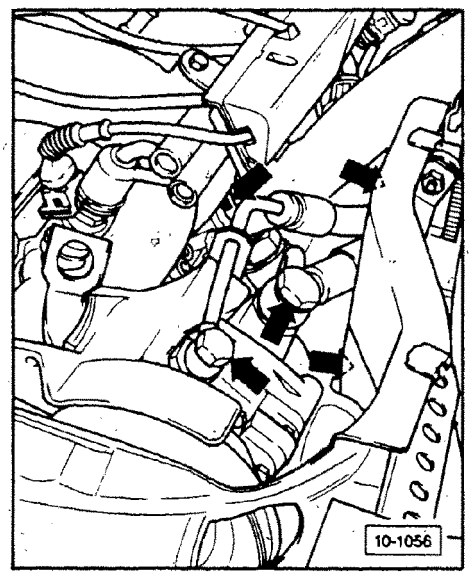

- unfasten feed and return hoses on central hydraulic pump
- disconnect coolant hose on cylinder head
- remove air duct on radiator

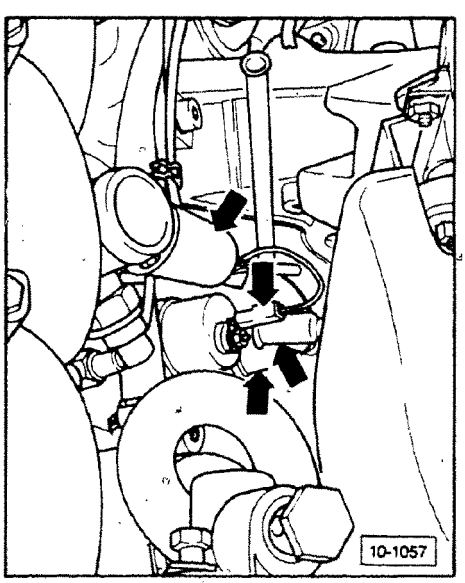

- remove harness connectors for oil pressure switch, oil pressure sender and thermoswitch, leaving wiring harness exposed

cardiagn.com

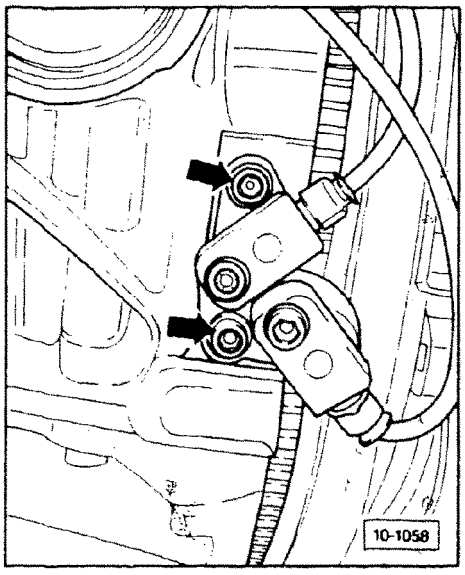

- remove bracket complete with ignition timing reference sender and engine speed sensor (two bolts, **arrows**)

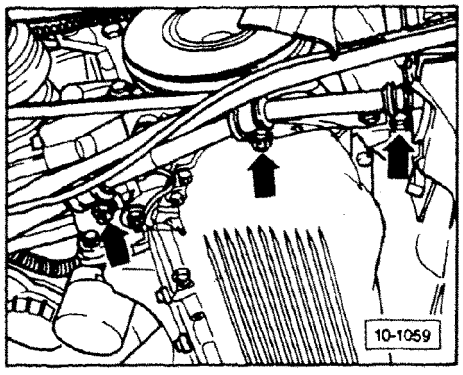

- (vehicles with A/C) loosen clamps for wire from A/C compressor to condenser

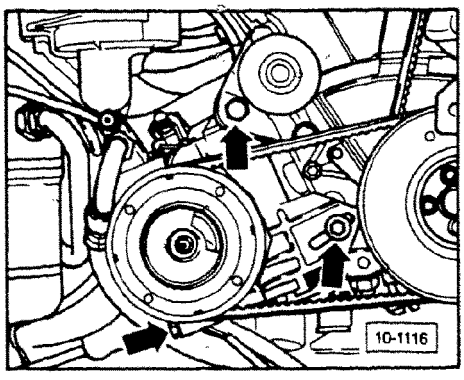

- loosen v-belt tension for A/C compressor
- remove A/C compressor and fasten on right side rail with wire

CAUTION

Do not bend refrigerant lines.

cardiagn.com

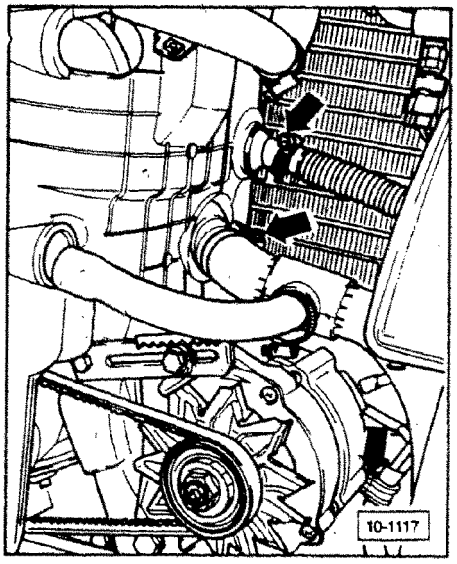

- remove coolant hose.
- loosen hose clamp on oil cooler
- place drain pan under vehicle
- loosen wiring clamp on alternator, disconnect wires and leave hanging

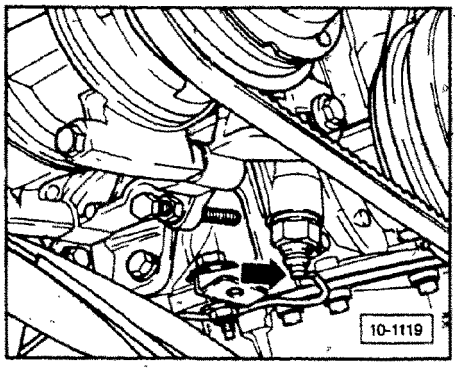

- disconnect wire from oil temperature sender and leave hanging

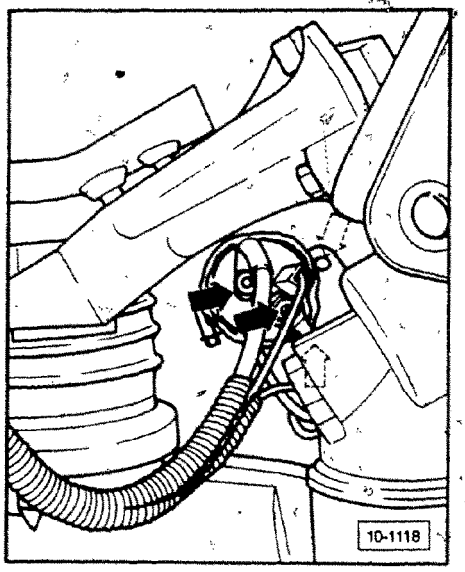

- disconnect wires to starter
- remove starter

cardiagn.com

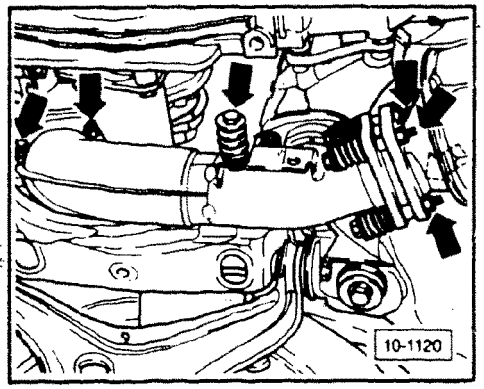

- remove front exhaust pipe

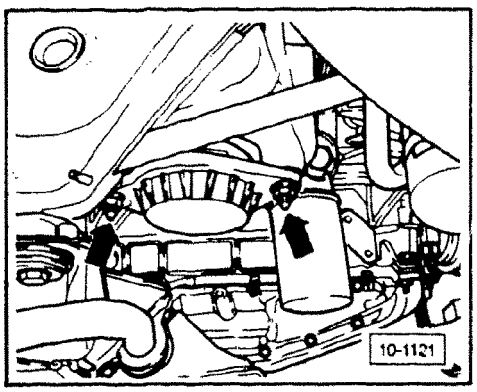

- remove right engine mount

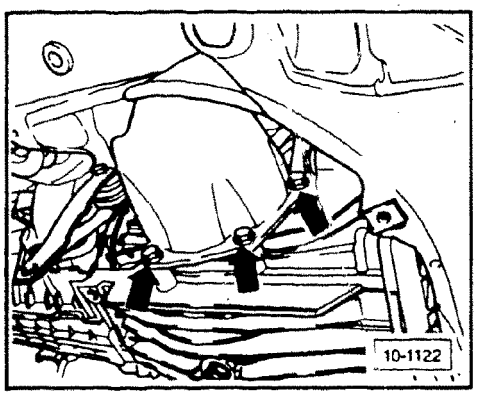

- remove heat shield for transmission drive shaft

Note

The lower starter mounting bolt should be pushed back to the stop on the drive shaft to avoid damaging the bolt during engine installation.

cardiagn.com

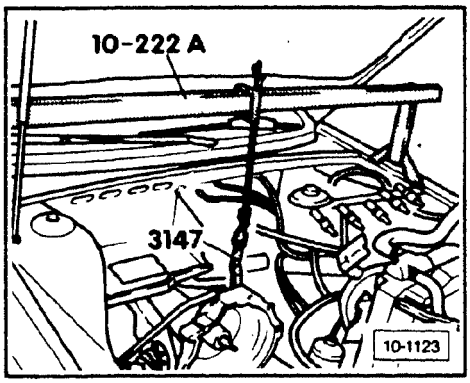

- remove upper most left engine/transmission mounting bolt and attach draw hook **3147**
- place support bar **10-222 A** on inner fender mounting area
- attach **3147** draw hook to support bar **10-222 A**
- raise/lower transmission to desired height by adjusting wing nut

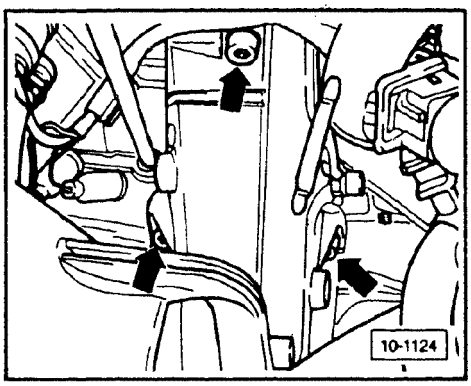

- remove left engine mount
- remove engine-transmission mounting bolts

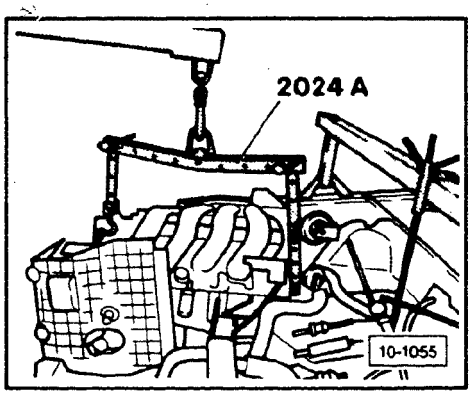

- attach engine sling **2024 A** to engine as shown

Note

To balance the engine assembly at its center of gravity insert the hook into the rail holes as shown in the illustration.

- position crane (watch for A/C compressor)
- attach **2024 A** lifting hook to crane
- ensure that all crane and hook fastening points are tight

- pry engine from transmission
- lift engine and remove from front

CAUTION

Carefully guide the engine while removing, to avoid damaging the drive shaft, clutch and sheet metal.

cardiagn.com

Engine, installing

Note

Installation procedure is the reverse of removal, however; keep the following points in mind:

- ensure that the engine/transmission alignment dowels are installed in cylinder block, install if missing
- always replace self locking nuts
- adjust accelerator cable, see Group **20**
- fill cooling system, see Group **19**
- check engine oil level before starting engine
- check automatic transmission oil level
- adjust exhaust system tension-free see Group **26**

Note

Replace all tie wraps which have been removed in the same location.

To install A/C compressor see Group **87**, removing and installing.

CAUTION

After tensioning the V-belt, turn tensioning bolt approximately 10 mm (0.4 in) from engine block.

cardiagn.com

Tightening Torques:	
Engine to transmission M8	20 Nm (15 ft lb)
M10	45 Nm (33 ft lb)
M12	60 Nm (44 ft lb)
Right and left engine support	45 Nm (33 ft lb)
A/C compressor to bracket	25 Nm (18 ft lb)
Exhaust pipe to transmission bracket	25 Nm (18 ft lb)
Engine mount to engine support	40 Nm (30 ft lb)
Engine mount to body	40 Nm (30 ft lb)

cardiagn.com

Index

4-cylinder

Drive belts
★ ■ assembly 13.3
■ installing 13.4

Drive plate
■ ignition timing mark 13.11
■ installing 13.11

Clutch
■ assembly 13.8

Connecting rod
■ assembly 13.14

Crankcase
■ assembly 13.7

Crankshaft
■ dimensions 13.10
■ oil seal, removing/installing 13.13

Cylinder bore
■ checking 13.16
■ dimensions 13.16

Cylinder head
■ assembly 13.6

Flywheel
★ ■ assembly 13.8 ,13.50
■ removing/installing 13.12

Pilot bearing
■ removing/installing 13.12

Piston
■ assembly 13.14
■ checking 13.15
■ dimensions 13.16
■ identification 13.16
■ rings, checking 13.15

Short block
■ assembly 13.9

Torque converter drive plate
■ removing/installing 13.12

5-cylinder

Connecting rod
■ assembly 13.25
■ bearings, checking 13.24

Crankshaft
■ assembly 13.23
■ dimensions 13.24

Cylinder bore
■ checking 13.27

Cylinder head
■ assembly 13.18

Drive belt
■ installing 13.20
■ pully assembly 13.17
■ removing 13.21

Flywheel
★ ■ assembly 13.23 ,13.50
■ removing/installing 13.24

Piston
■ assembly 13.25
■ checking 13.26
■ identification 13.27
■ rings, checking 13.26

Short block
■ assembly 13.19

Vibration damper
■ removing/installing 13.20

★ NEW INFORMATION since last filming

cardiagn.com

THIS FRAME INTENTIONALLY LEFT

BLANK

cardiagn.com

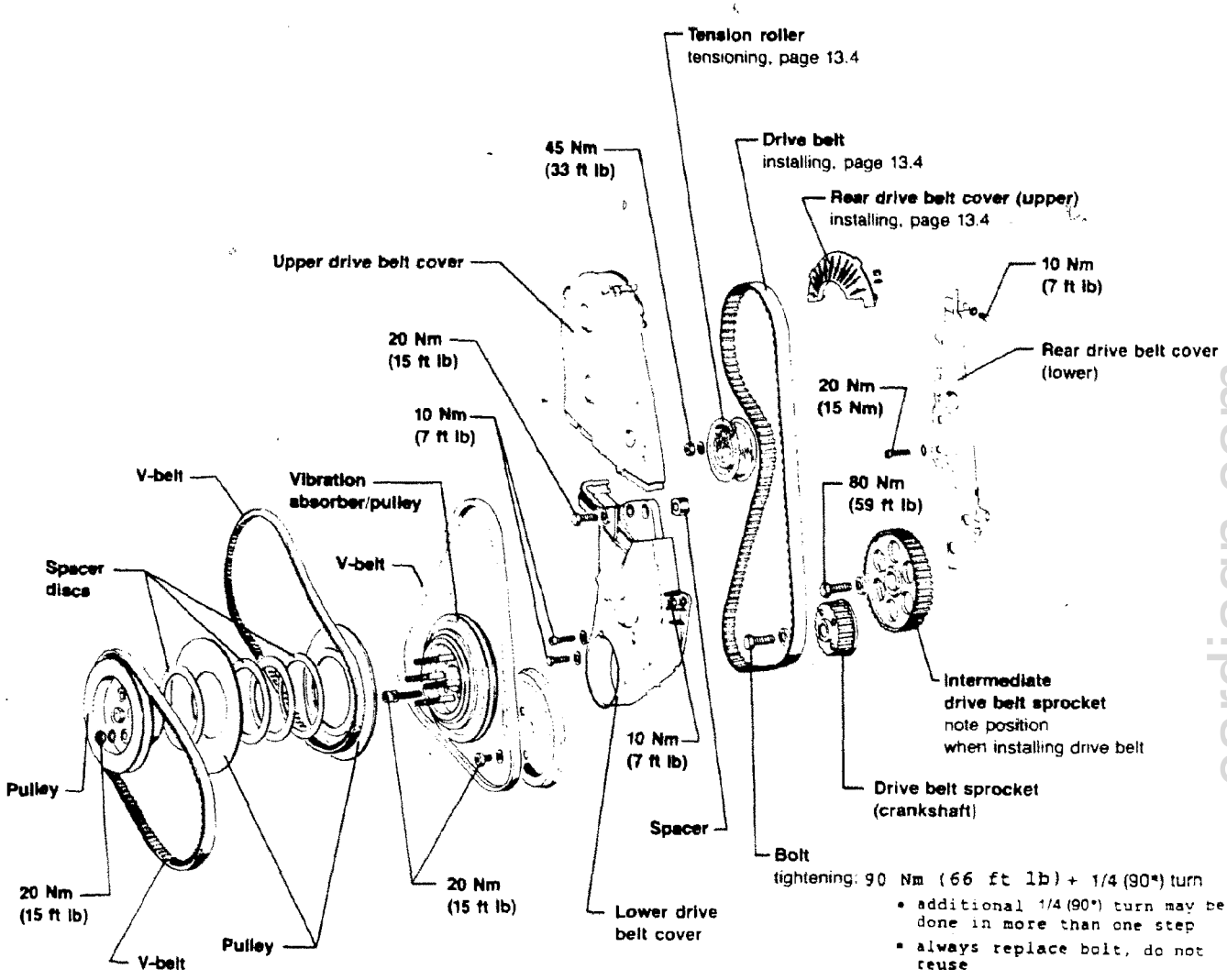

- additional 1/4 (90°) turn may be done in more than one step
- always replace bolt, do not reuse
- use tool 3099 to hold belt sprocket while loosening or tightening bolt
- lightly coat the bolt threads and shoulder with oil prior to installing

CAUTION

Use dial type torque wrench. Damage may result from use of a "click" type wrench.

13-0905

cardiagn.com

Drive belt, installing

(Timing adjustment)

CAUTION

Do not turn crankshaft or camshaft with drive belt removed. Engine may be damaged by valves hitting pistons.

Note

The crankshaft must not be at TDC.

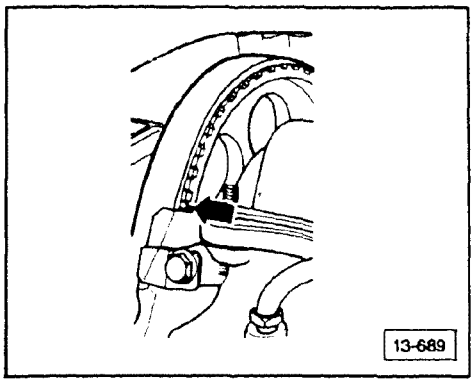

- align mark on camshaft sprocket with cylinder head cover (**arrow**)

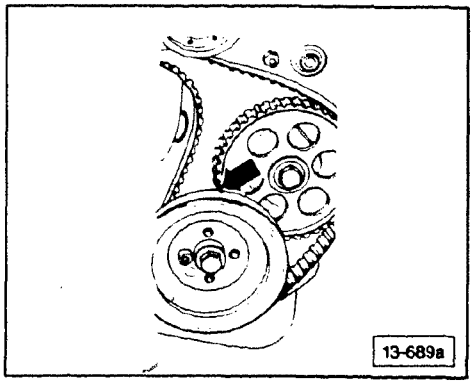

- align mark on crankshaft pulley/vibration dampener with mark on intermediate shaft sprocket (**arrow**) (TDC Cylinder no. 1)
- mount drive belt on crankshaft and intermediate shaft sprockets
- mount pulley and vibration dampener on crankshaft with all four fasteners. Note installation position
- mount drive belt on camshaft sprocket wheel

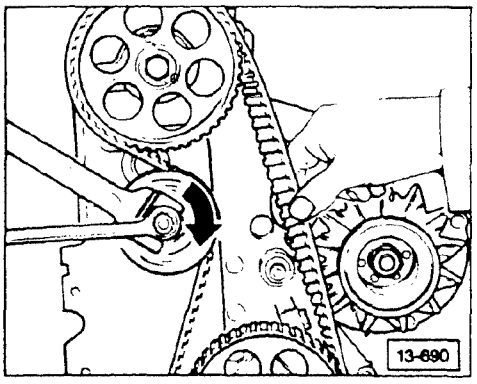

- tighten drive belt by turning tensioner in direction of (**arrow**)
  - torque: 45 Nm (33 ft lb)
  - it must be possible to twist drive belt 90° in center between camshaft and intermediate sprockets
- tighten lock nut on tensioner
- turn crankshaft twice and re-check drive belt tension
- remove crankshaft pulley and vibration dampener
- install lower drive belt cover
- install upper drive belt cover, V-belt pulley, vibration dampener and V-belt
- check ignition timing; if necessary, adjust (see Group 29)

(more)

cardiagn.com

Note

If you've removed the drive belt from the camshaft sprocket, adjust the belt as follows:

- set crankshaft to TDC on cylinder no. 1
- align mark on camshaft sprocket with cylinder head cover
- mount drive belt and tighten
- check if ignition distributor rotor is pointing to marking for cylinder no. 1 on distributor housing. If not, turn distributor until mark and rotor align. If necessary, remove and reinstall distributor
- turn crankshaft twice and check that crankshaft and camshaft marks are aligned with proper reference points
- check ignition timing and if necessary, adjust (see Group 29)

cardiagn.com

CAUTION

Coolant/anti-freeze **must not** be reused when replacing engine, cylinder head, cylinder head gasket, radiator and heater core.

CAUTION

Always replace gaskets and seals.

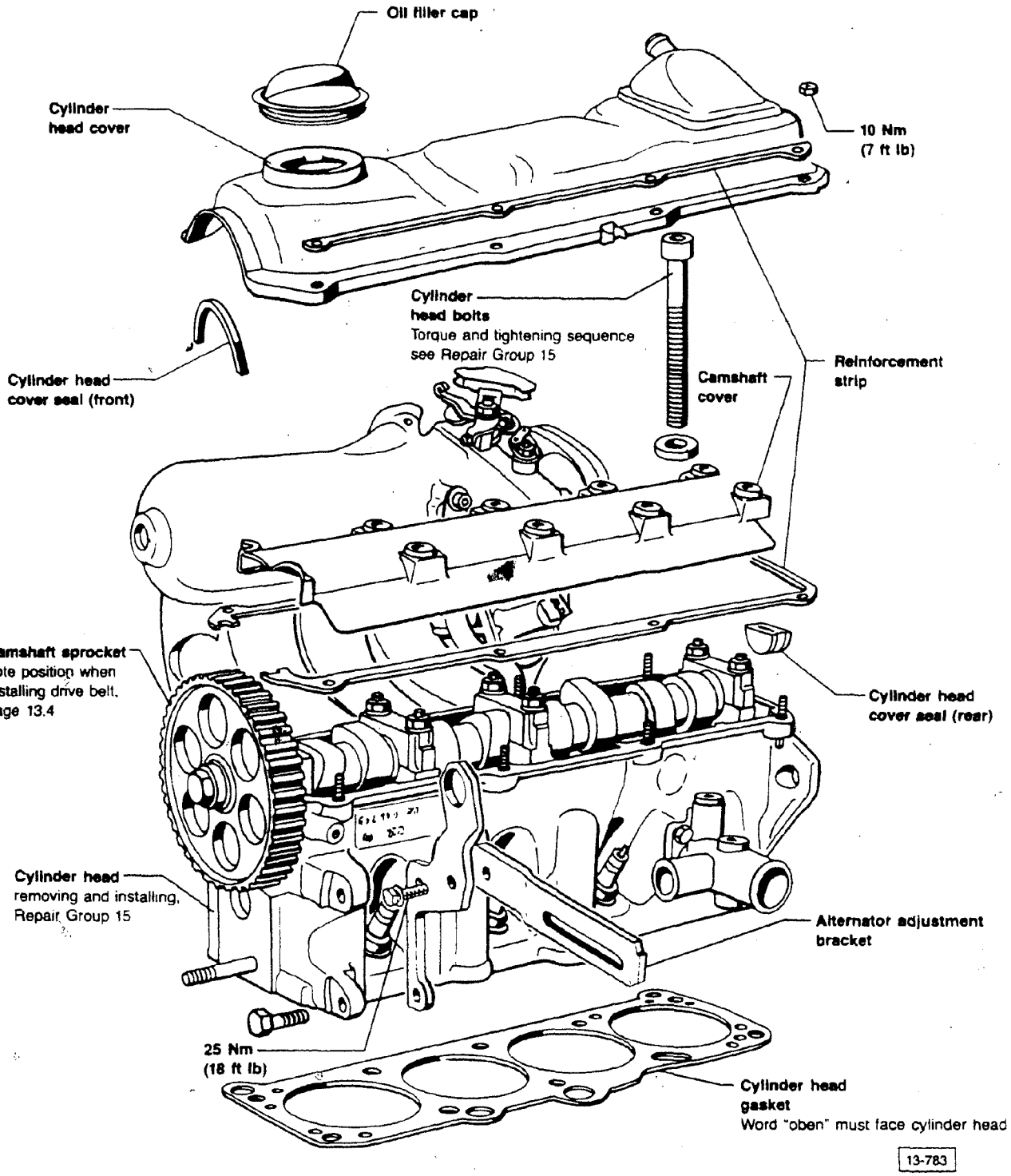

cardiagn.com

CAUTION

If you find metal shavings in the engine oil as a result of engine damage; clean oil passages thoroughly, then replace oil cooler and oil filter.

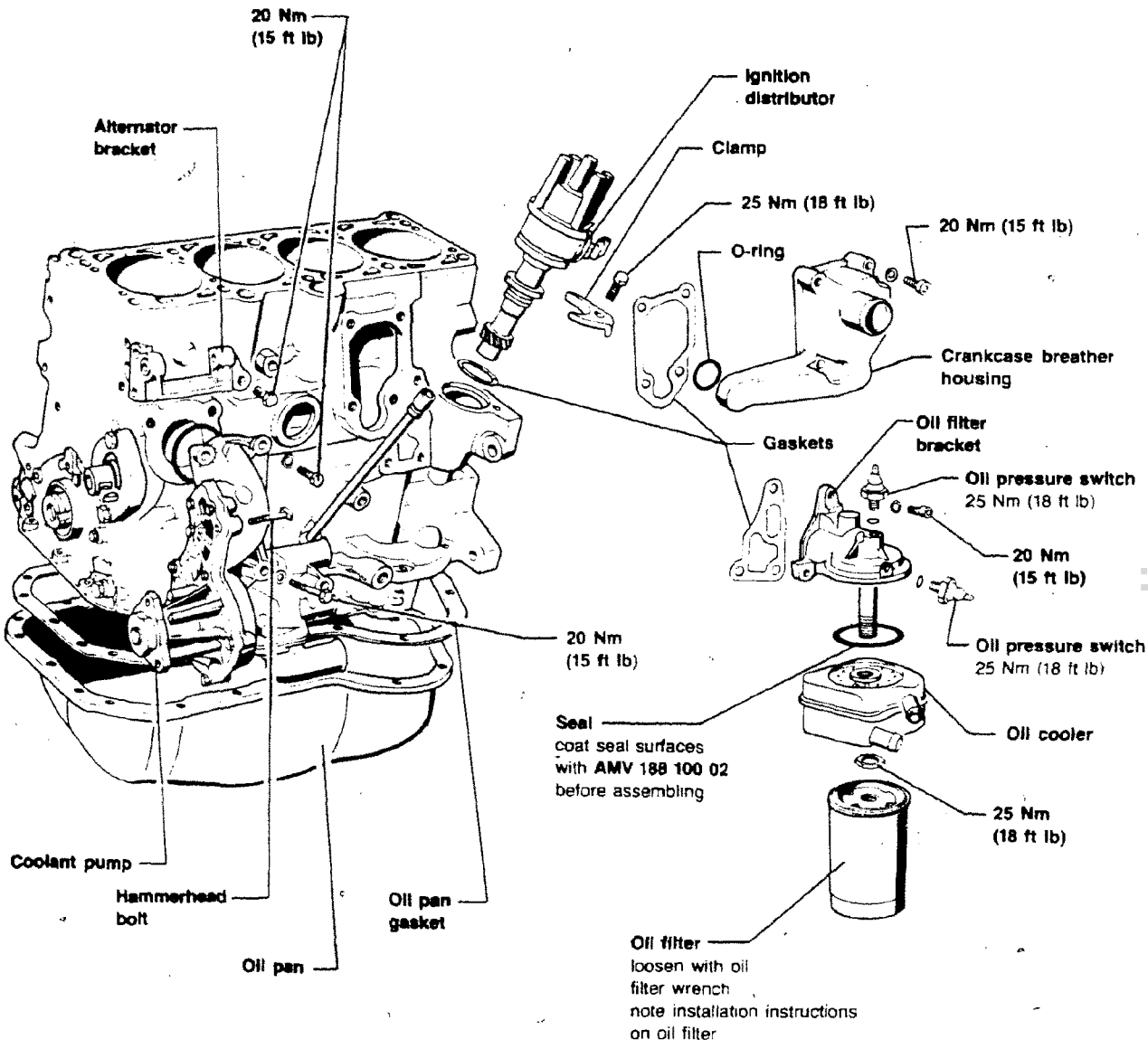

cardiagn.com

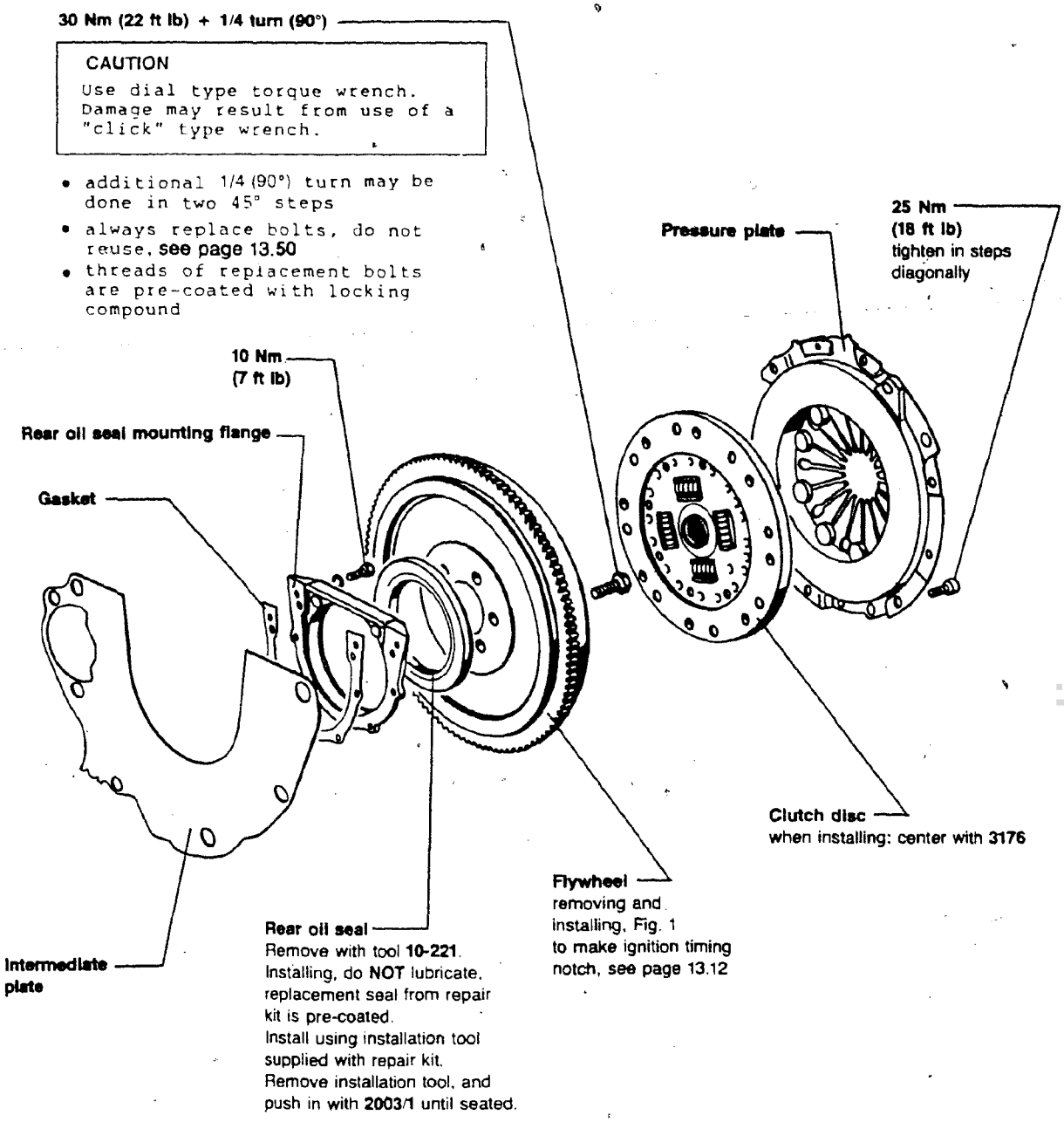

cardiagn.com

CAUTION

Coolant/antifreeze **must not** be reused when replacing engine, cylinder head, cylinder head gasket, radiator and heater core.

CAUTION

Short blocks are supplied with a pilot bearing in the crankshaft. Remove the pilot bearing before installing engine in vehicles with automatic transmissions.

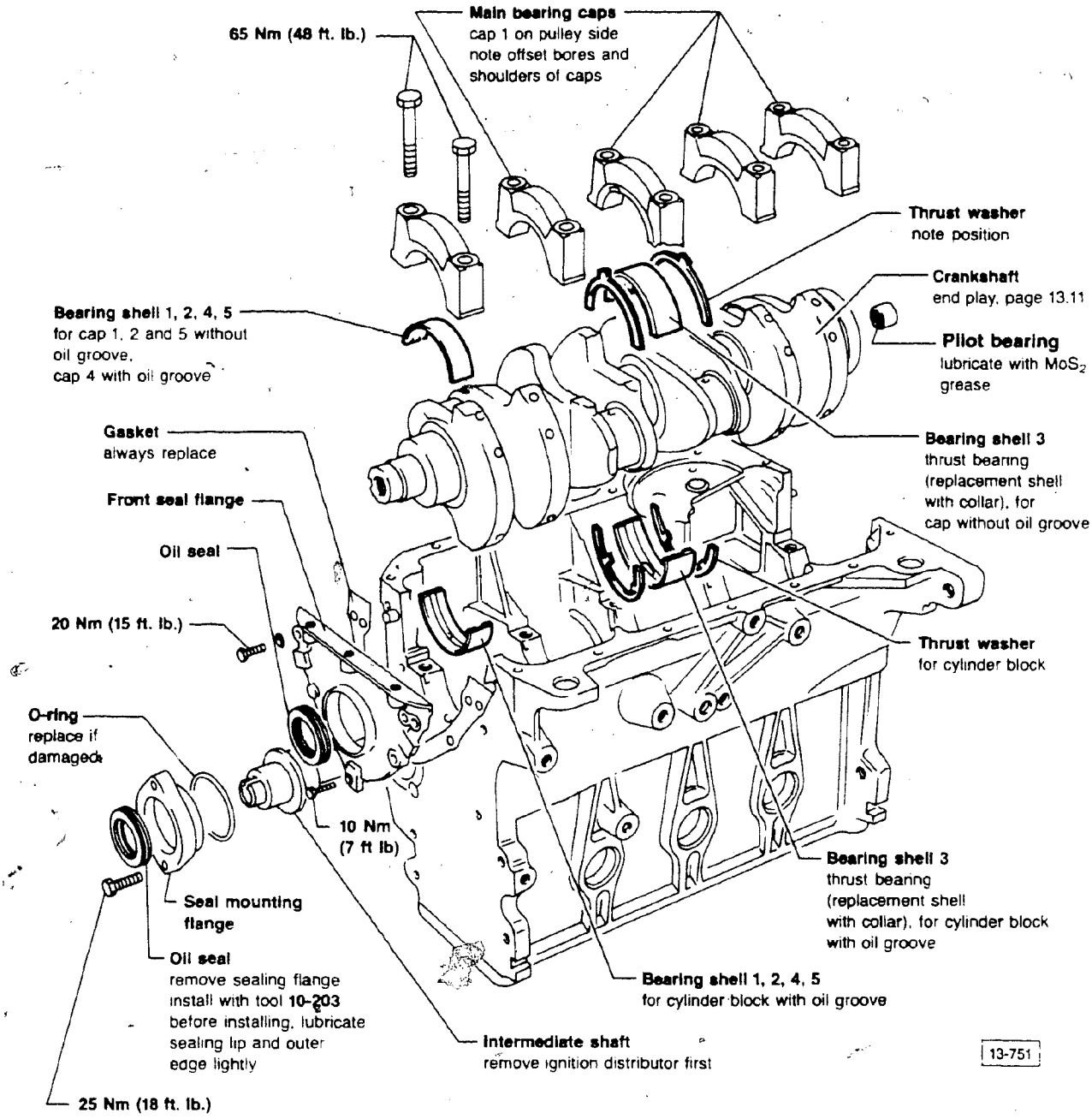

CAUTION

Do not interchange worn bearing shells.

cardiagn.com

Crankshaft dimensions (mm)

	Main bearing journal (mm)	Connecting rod journal (mm)
Basic dimension	54.022-54.042	47.822-47.842
1st undersize	53.772-53.792	47.572-47.592
2nd undersize	53.522-53.542	47.322-47.342
3rd undersize	53.272-53.292	47.072-47.092

cardiagn.com

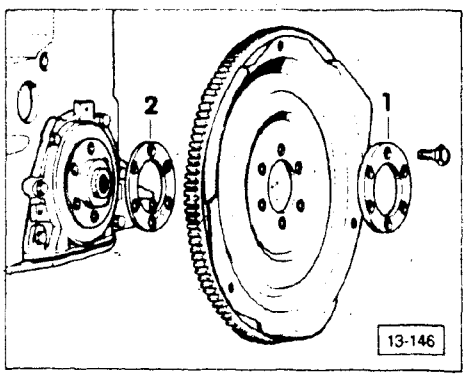

Drive plate, installing

- chamfer of washer **1** must point to drive plate
- install bolts
  - torque: 30 Nm (22 ft lb) + 1/4 (90°) turn

> **CAUTION**
> Use dial type torque wrench. Damage may result from use of a "click" type wrench.

  - additional 1/4 (90°) turn may be done in two 45° steps
  - always replace bolts, do not reuse
  - threads of replacement bolts are pre-coated with locking compound

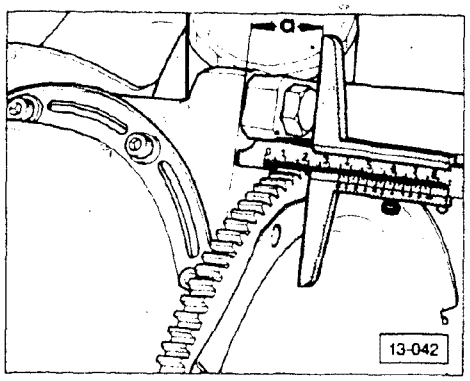

- use shim **2** (shown in above illustration) if necessary
  - **a** = 30.5-32.1 mm (1.20-1.26 in.)

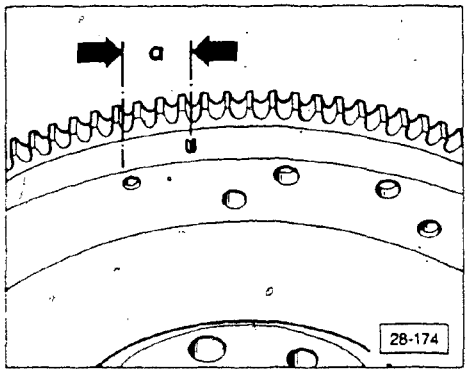

Making ignition timing mark

Note

If you replace the flywheel/drive plate you will have to inscribe the ignition timing mark. Replacement flywheel/drive plates have the zero degree TDC mark only.

Make ignition timing mark at a point in an arc left from center of TDC marking.

- **a** = 14 mm (9/16 in.) along arc

cardiagn.com

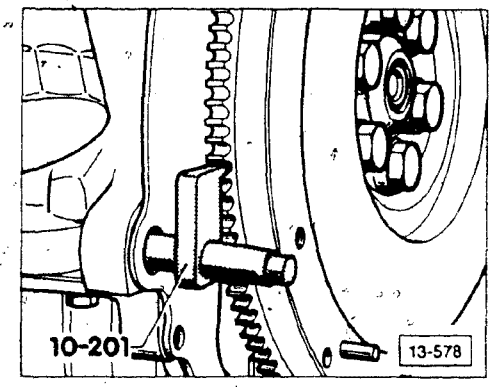

▶ **Fig. 1 Flywheel/torque converter drive plate, removing/installing**

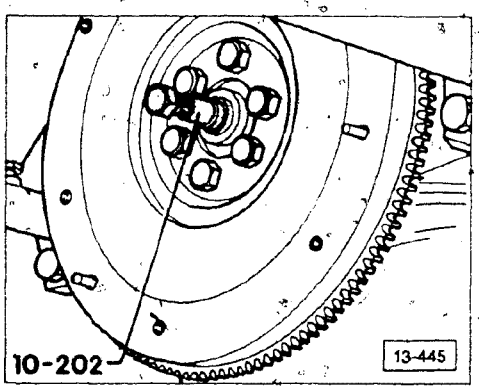

▶ **Fig. 2 Pilot bearing, removing**

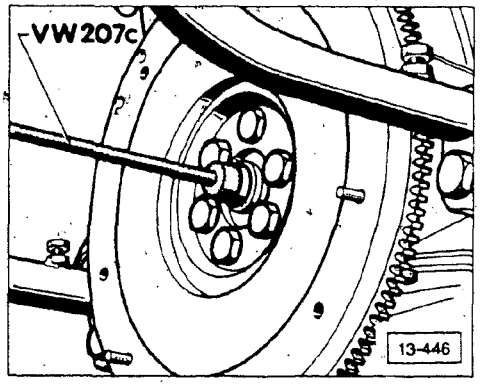

▶ **Fig. 3 Pilot bearing, installing**

With **VW 207 C** or **3176**

Lettered side of bearing must face away from engine

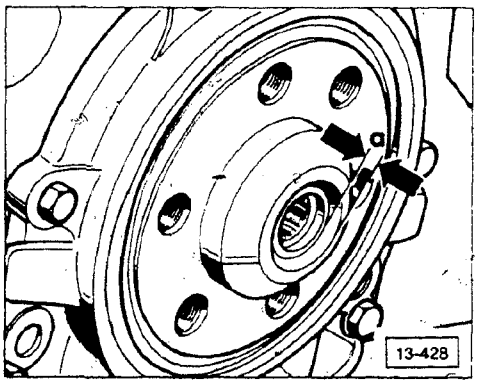

▶ **Fig. 4** Installation depth
- **a** = 1.5 mm (0.060 in.)

cardiagn.com

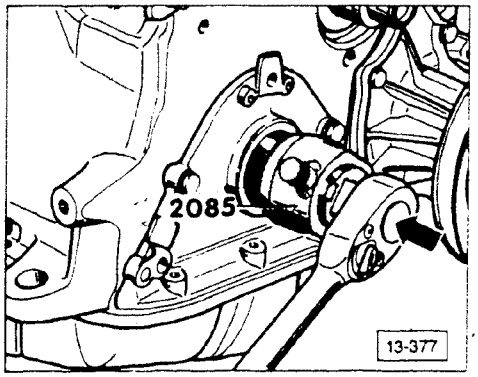

Crankshaft oil seal — drive belt side, removing/installing

Removing

- remove drive belt
- remove drive belt sprocket (use **3099** to loosen mounting bolts)
- unscrew inner part of oil seal extractor **2085** two turns (approximately 3 mm) out of outer part and lock with knurled screw
- to guide extractor, insert cylinder bolt from **3083** into crankshaft until it stops

- lubricate threaded head of oil seal extractor, set in position and push as far as possible into oil seal
- loosen knurled screw and turn inner part against crankshaft until oil seal is pulled out
- clamp extractor in a vise and remove oil seal using pliers

Installing

- lightly lubricate sealing lip and outer edge of new oil seal
- place guide sleeve from **3083** onto crankshaft pin and push oil seal over guide sleeve
- press in oil seal up to stop

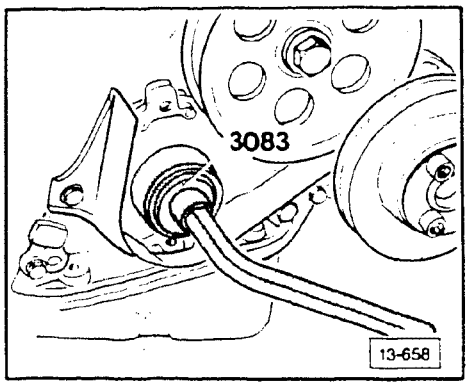

cardiagn.com

THIS FRAME INTENTIONALLY LEFT

BLANK

cardiagn.com

CAUTION

Do not turn crankshaft when measuring radial play.

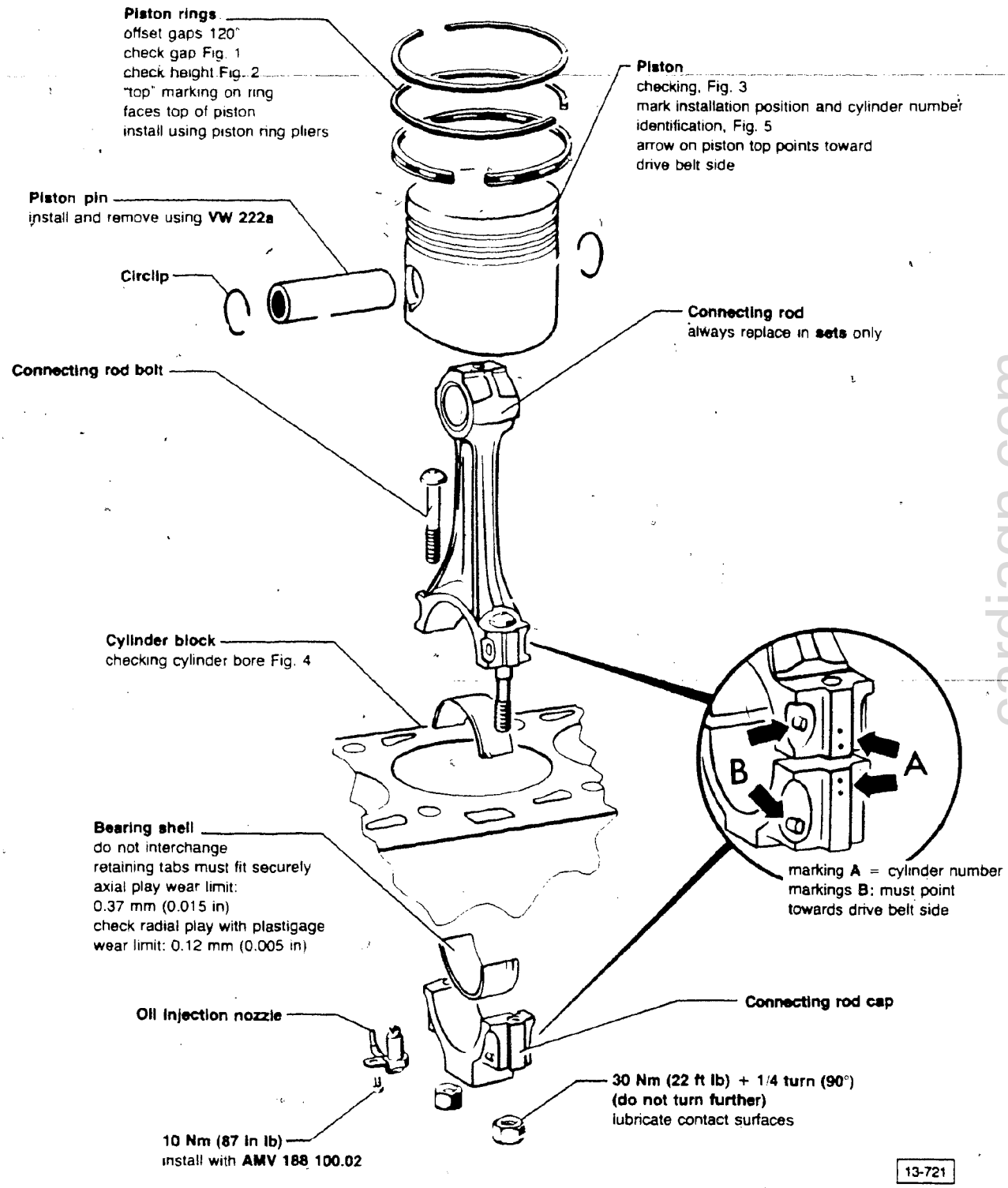

cardiagn.com

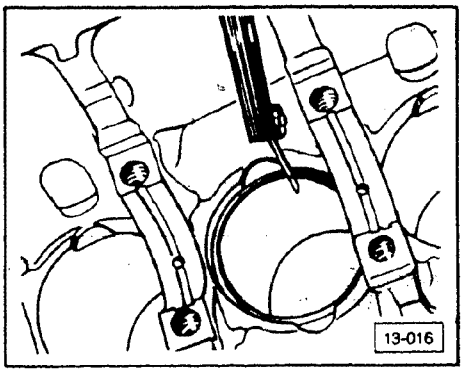

▶ **Fig. 1 Piston rings, checking end gap**

- Insert piston ring squarely into cylinder until it is approximately 15 mm (0.59 in) from bottom edge of cylinder

New:
- compression ring 0.30 to 0.45 mm (0.012 to 0.018 in)
- oil scraper ring 0.25 to 0.45 mm (0.010 to 0.018 in)

Wear limit:
- 1.0 mm (0.04 in)

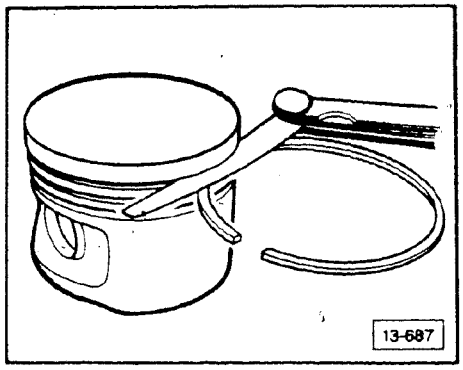

▶ **Fig. 2 Piston ring side clearance, checking**

New:
- 0.02-0.05 mm (0.001 to 0.002 in)

Wear limit:
- 0.15 mm (0.006 in)

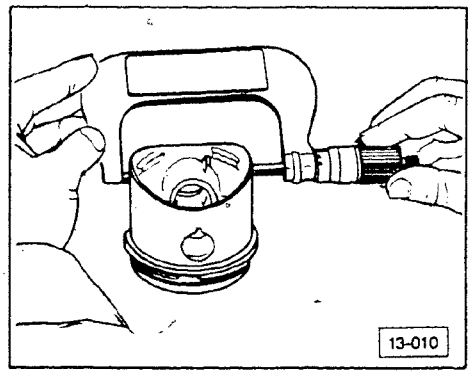

▶ **Fig. 3 Piston, checking**

- Measure approximately 10 mm (0.39 in) from lower edge of skirt at 90° angle to piston pin axis

Nominal dimension tolerance:
- maximum 0.04 mm (0.0016 in)

cardiagn.com

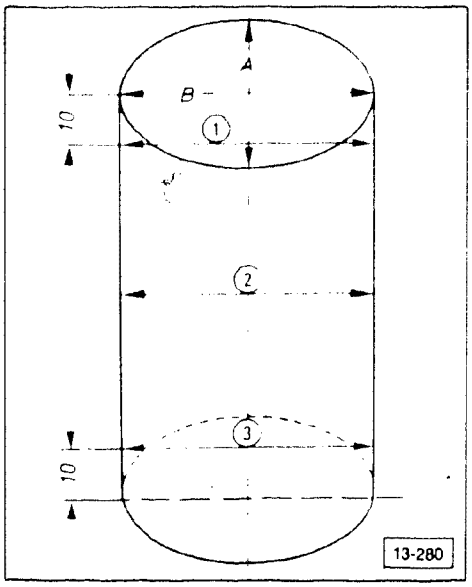

▶ **Fig. 4 Cylinder bore, checking**

- Measure at three points in cross direction **A** and longitudinal direction **B**

  Use inside micrometer 50-100 mm (2 to 4 inches)

  Maximum deviation from nominal dimension:
  - 0.08 mm (0.003 in)

> **CAUTION**
>
> Do not measure cylinder bore when cylinder block is mounted to work bench with engine mount **VW 540**. Engine mounted in fixture can cause distortion affecting measurement.

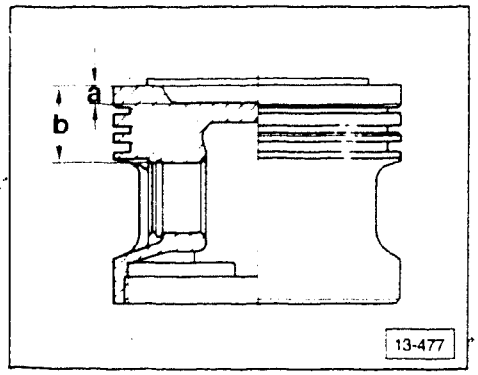

▶ **Fig. 5 Piston identification**

Recess depth a (mm, in)	Recess depth b (mm, in)
4.6 mm (0.181 in)	19.3 mm (0.759)

Piston and cylinder diameters (mm)

Size	Piston	Cylinder Bore
Standard	82.48 mm	82.51 mm
1st oversize	82.73 mm	82.76 mm
2nd oversize	82.98 mm	83.01 mm

cardiagn.com

CONTINUED IN THE

BEGINNING OF NEXT ROW

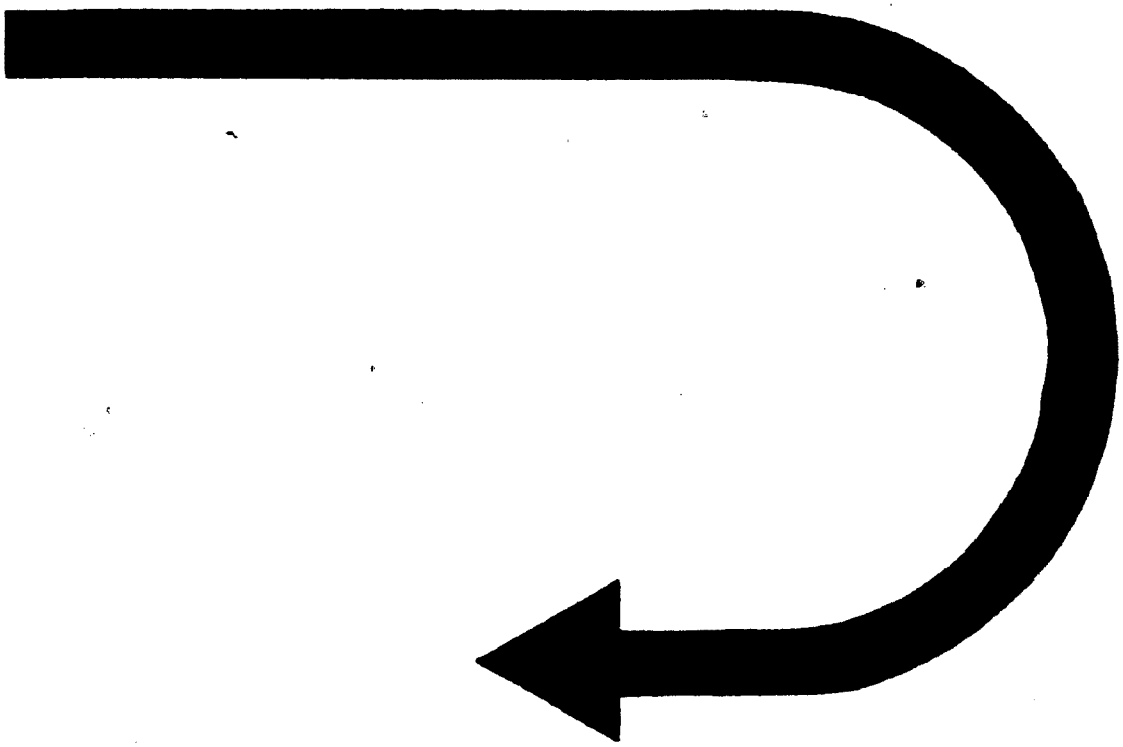

cardiagn.com

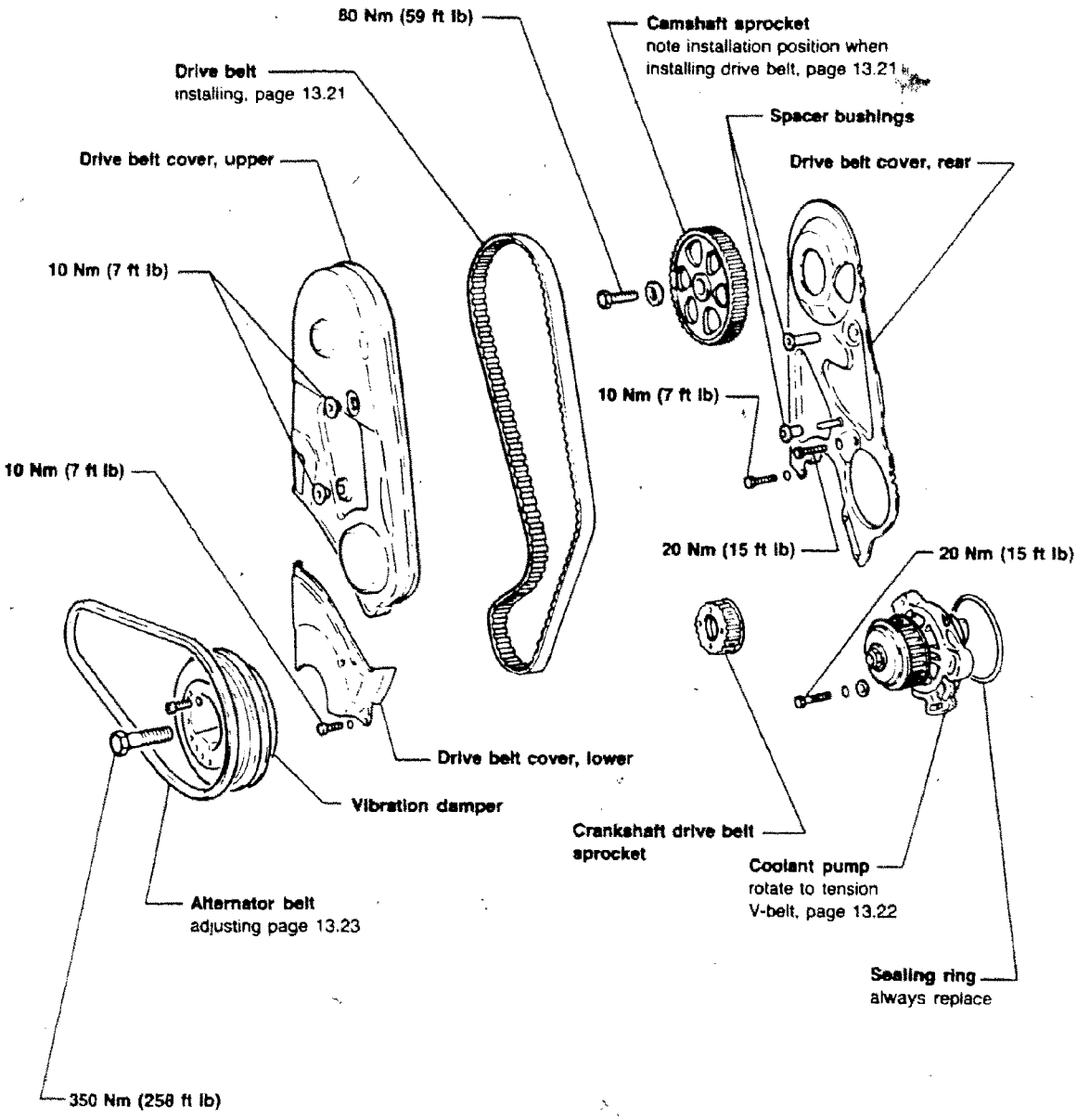

13-795

D-2

cardiagn.com

CAUTION

Always replace gaskets and seals.

CAUTION

Coolant/antifreeze **must not** be reused when replacing engine, cylinder head, cylinder head gasket, radiator and heater core.

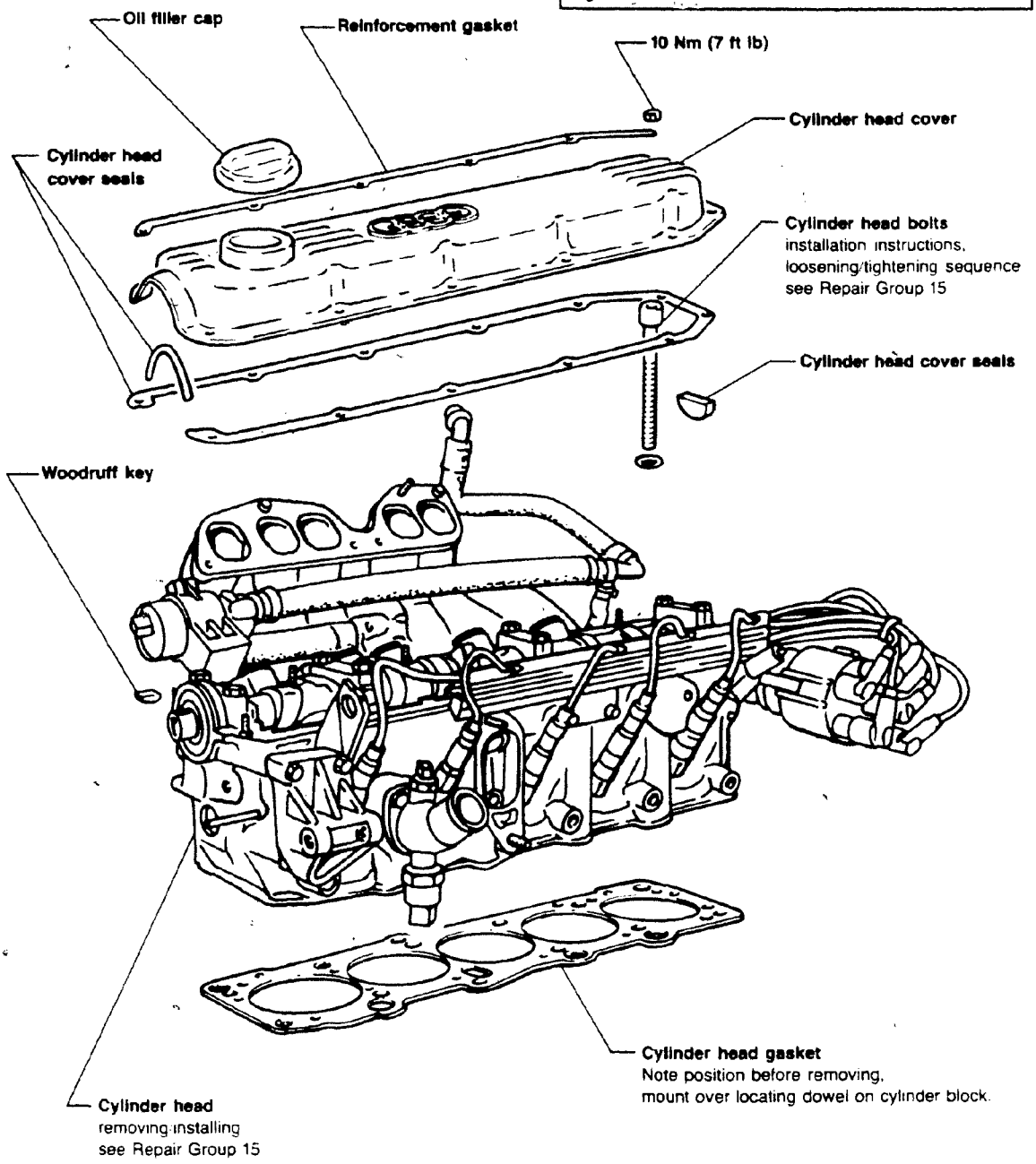

cardiagn.com

CAUTION

Always replace gaskets and seals.

CAUTION

Do not turn crankshaft or camshaft with drive belt removed. Engine may be damaged by valves hitting pistons.

CAUTION

Coolant/antifreeze **must not** be reused when replacing engine, cylinder head, cylinder head gasket, radiator and heater core.

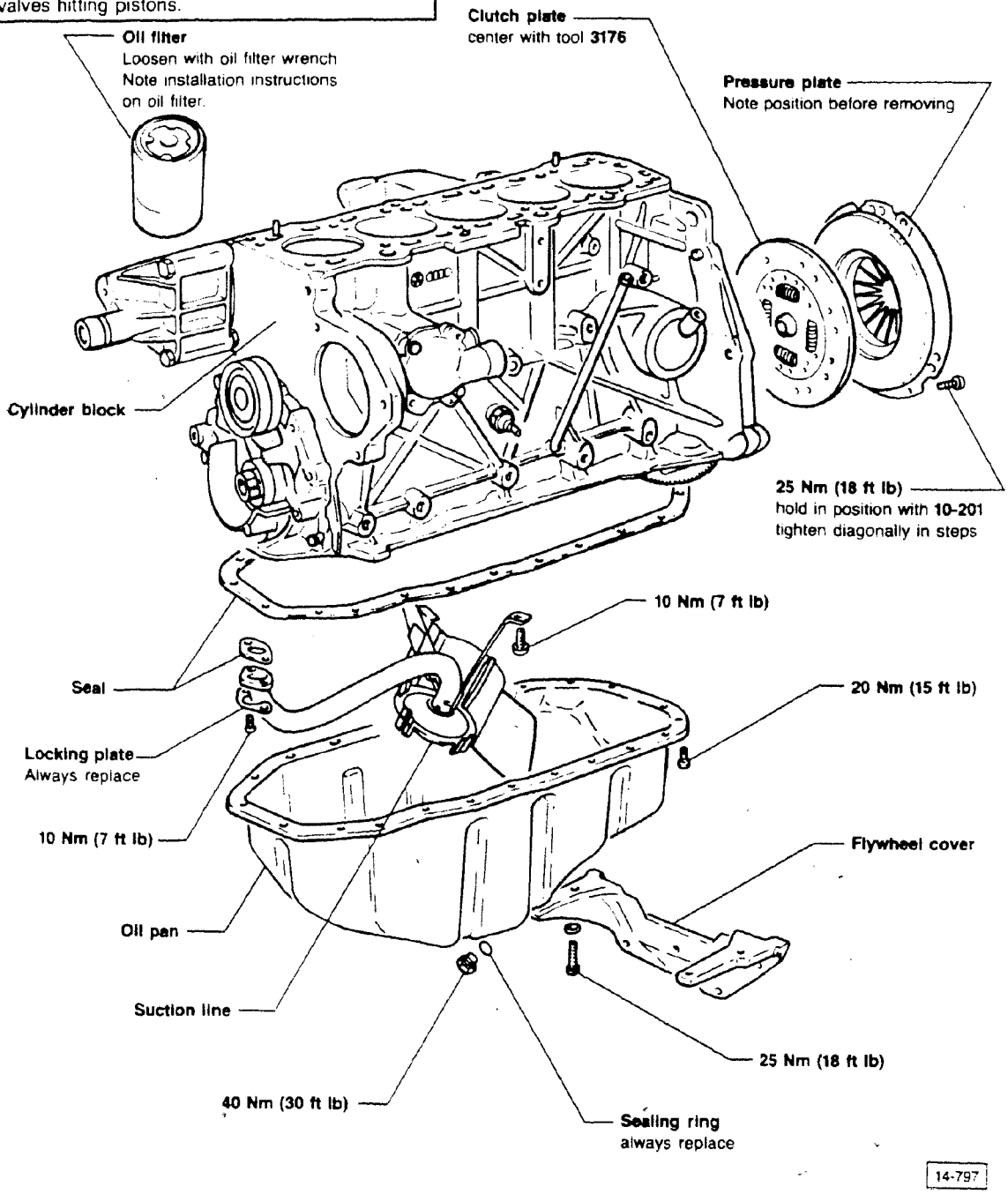

cardiagn.com

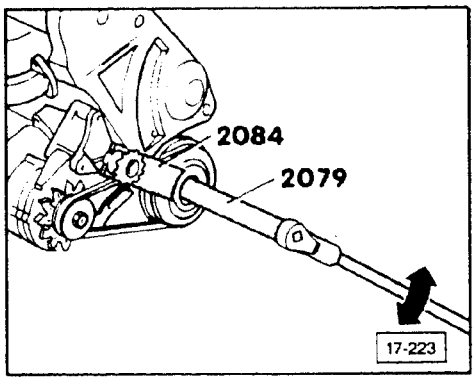

▶ **Fig. 1 Vibration damper, removing/installing**

- apply corrosion inhibitor **AMV 188 001 02** to top thread and bolt contact surface
- install belt and sprocket on crankshaft with vibration damper
- insert retainer **2084** in vibration damper, and torque bolt for vibration damper to 350 Nm (258 ft lb) using extension **2079**
- torque with extension tool **2079**, in alignment with the torque wrench

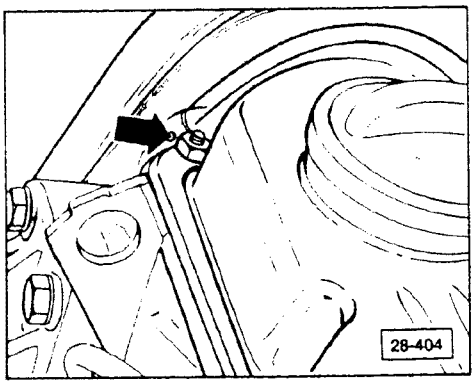

▶ Drive belt, installing

(Setting valve timing)

- align mark on camshaft sprocket with upper edge of cylinder head cover gasket (**arrow**)

> **CAUTION**
>
> Toothed belt must not be jammed between oil pump and sprocket when installing vibration damper.

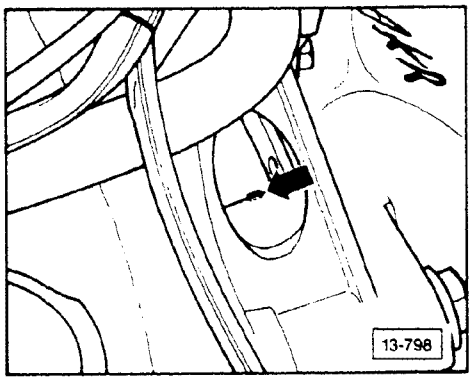

▶

- set crankshaft at TDC

With engine installed:

- align TDC mark **O** with cast mark (**arrow**) on bell housing

cardiagn.com

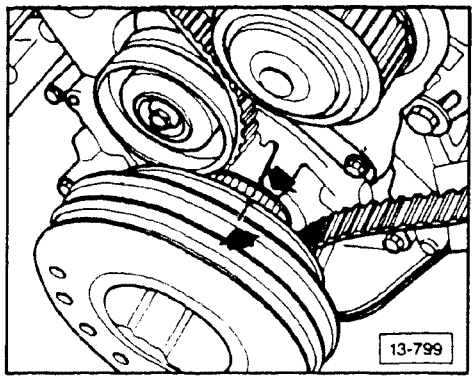

With engine removed:

- align notch on pulley with reference mark on oil pump housing (**arrows**)

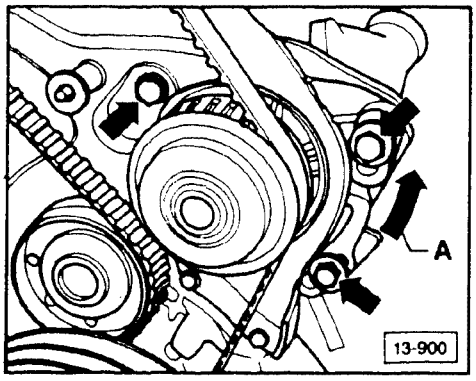

- loosen coolant pump mounting bolts (**arrows**)
- install drive belt
- adjust drive belt tension by turning coolant pump counterclockwise (arrow **A**)
- tighten coolant pump mounting bolts

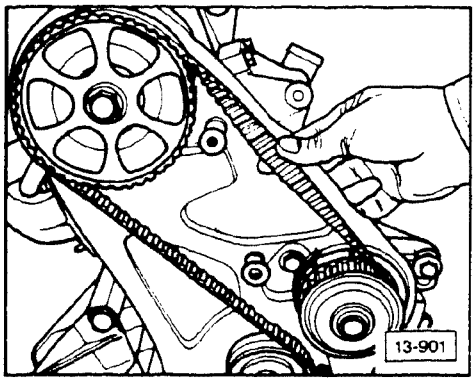

- drive belt is tensioned correctly when belt can be twisted 90° with thumb and index finger mid-way between camshaft sprocket and coolant pump
- recheck adjustment
- install drive belt cover
- install power steering pump (see Repair Group 48)
- install alternator V-belt, page 13.23

cardiagn.com

THIS FRAME INTENTIONALLY LEFT

BLANK

cardiagn.com

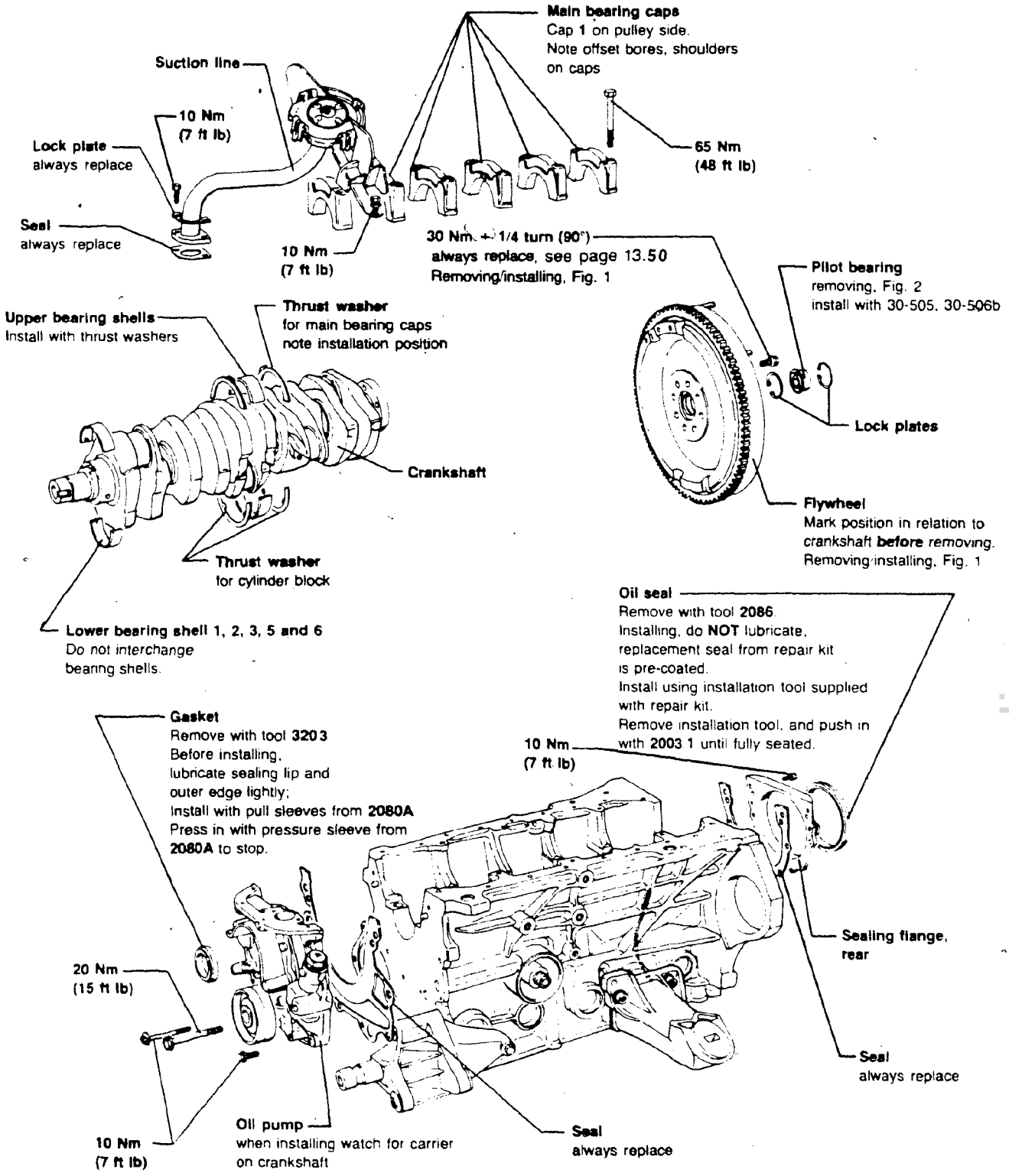

Note

Do not turn crankshaft when measuring end play.

13-794

D-8

cardiagn.com

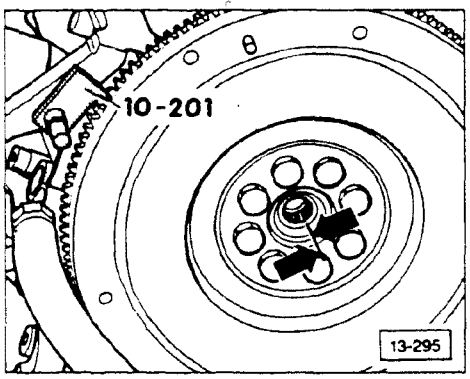

▶ **Fig. 1 Flywheel, removing/installing**

Removing

- mark relationship to crankshaft (as shown)

Installing

- install bolts
  - torque: 30 Nm (22 ft lb) + 1/4 (90°) turn

> **CAUTION**
> Use dial type torque wrench. Damage may result from use of a "click" type wrench.

- additional 1/4 (90°) turn may be done in two 45° steps
- always replace bolts, do not reuse, see page 13.50
- threads of replacement bolts are pre-coated with locking compound

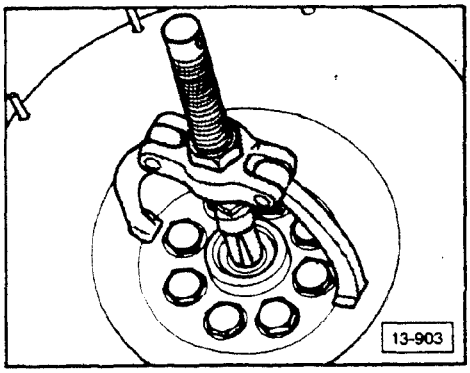

▶ **Fig. 2 Pilot bearing, removing**

- remove needle bearing with extractor (as shown)

Stage	Main bearing journal diameter	Connecting rod journal diameter
Standard	57.958-57.978	47.758-47.778
1st undersize	57.708-57.728	47.508-47.528
2nd undersize	57.458-57.478	47.258-47.278
3rd undersize	57.208-57.228	47.008-47.028

▶ Crankshaft dimensions (mm)

end play
new = 0.07-0.23mm (0.003-0.009 in.)
wear limit = 0.25mm (0.010 in.)
radial play – check with plastigage
new = 0.018-0.058mm (0.001-0.002 in.)
wear limit = 0.16mm (0.006 in.)

Connecting rod bearings, checking

axial play
new: 0.05 to 0.31mm (0.002-0.012 in.)
wear limit: 0.4mm (0.016 in.)

radial play
new: 0.010 to 0.056mm (0.0004-0.002 in.)
wear limit: 0.12mm (0.005 in.)
(check radial play with plastigage)

D-9

cardiagn.com

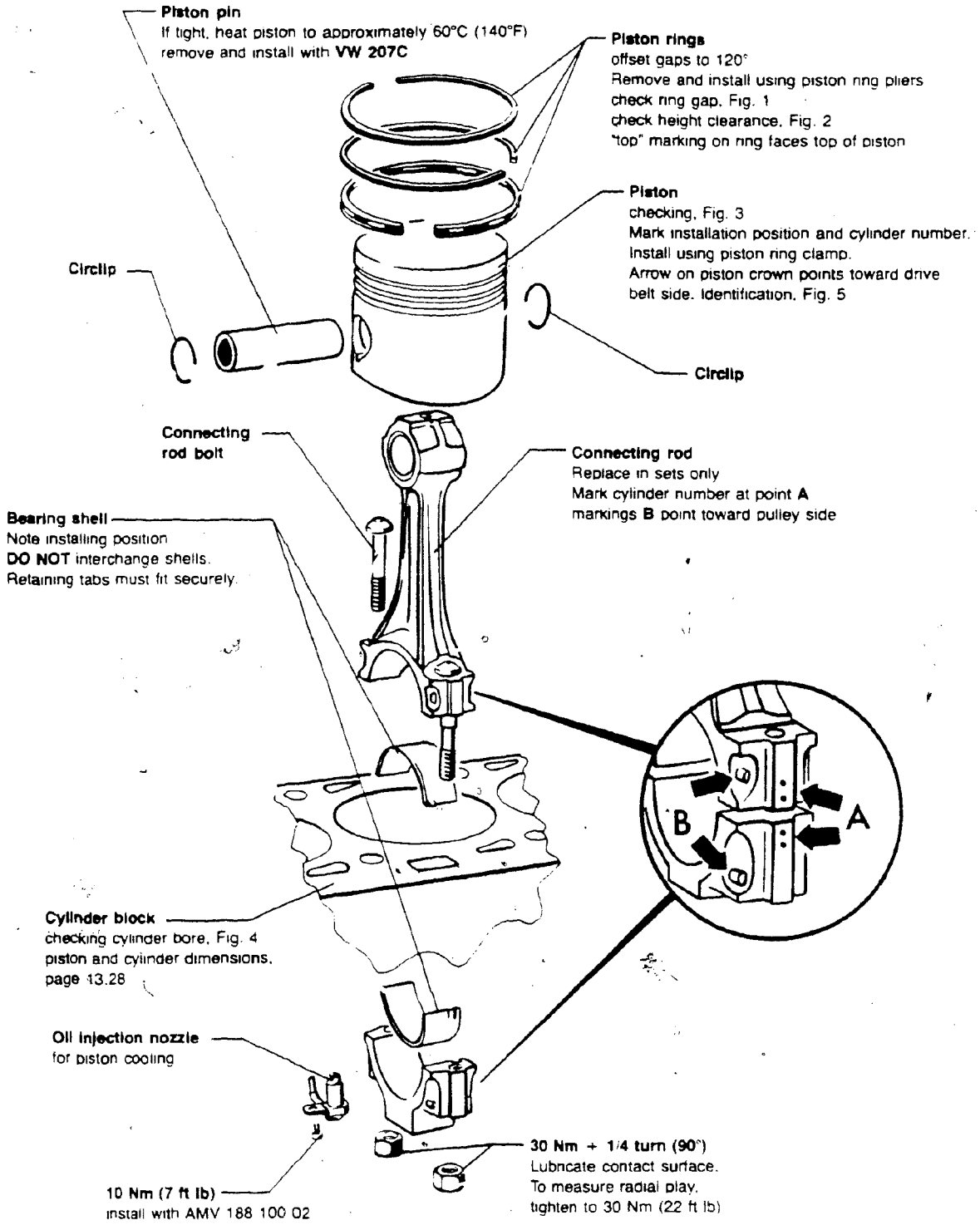

cardiagn.com

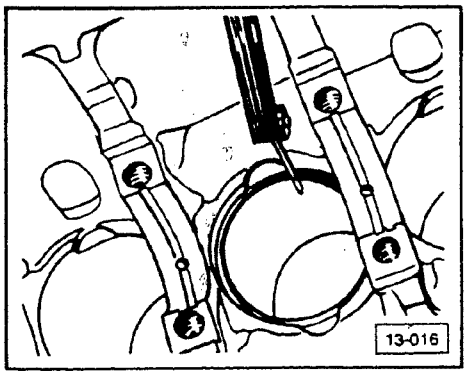

▶ **Fig. 1 Piston rings, checking end gap**

Insert ring squarely into cylinder until it is approximately 15mm from edge of cylinder.

New:
- compression rings: 0.20-0.40mm (0.008-0.016 in.)
- oil scraper ring: 0.25-0.50mm (0.010-0.020 in.)
- wear limit: 1.0mm (0.04 in.)

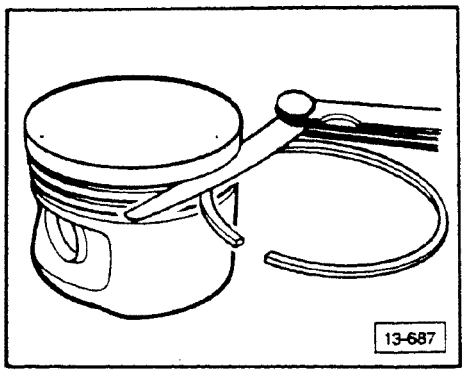

▶ **Fig. 2 Piston rings, checking side clearance**

New:
- compression rings: 0.02-0.07mm (0.001-0.003 in.)
- oil scraper ring: 0.02-0.06mm (0.001-0.002 in.)
- wear limit: 0.15mm (0.006 in.)

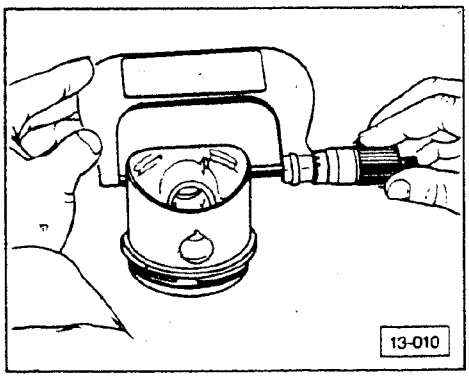

▶ **Fig. 3 Piston, checking**

Measure pistons approximately 10mm (3/8 in.) from the lower edge, at 90° to piston pin axis.

Nominal dimension tolerance:
- maximum 0.04mm (0.0016 in.)

cardiagn.com

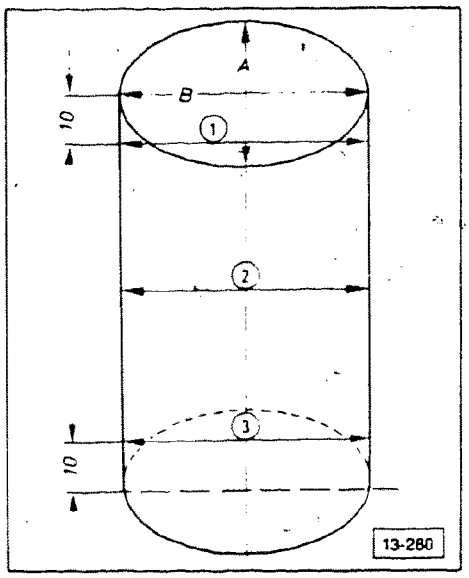

▶ **Fig. 4 Cylinder bore, checking**

Measure at three points in cross direction **A** and longitudinal direction **B**

Use inside micrometer 50-100mm (1.97-3.93 in.)

Nominal dimension deviation:
- maximum 0.08mm (0.003 in.)

CAUTION

Do not measure cylinder bore when cylinder block is mounted to work bench with engine mount **VW 540**. Measuring may be affected because of cylinder block distortion.

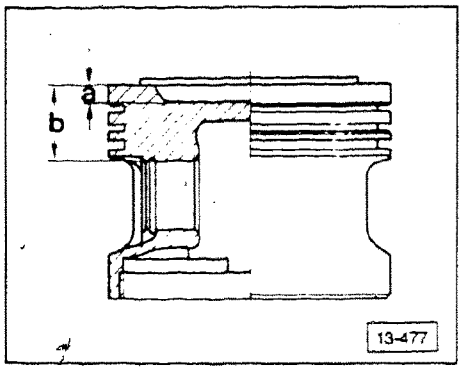

▶ **Fig. 5 Piston identification (in mm)**

a = 4.4mm
b = 22.2mm

Note

Recess depth **a** is measured at deepest point.

▶ **Piston and cylinder dimensions**

Size	Piston diameter	Cylinder bore
Standard	82.48mm	82.51mm
1st oversize	82.73mm	82.76mm
2nd oversize	82.98mm	83.01mm

cardiagn.com

THIS FRAME INTENTIONALLY LEFT

BLANK

cardiagn.com

Index

Coupe

Central hydraulic pump
- v-belt, tensioning 13.36

Components
★ ■ layout 13.30, 13.37, 13.44, 13.50

Connecting rod
- checking 13.49

Crankshaft
- checking 13.41
- end play, checking 13.40
- oil seals, removing/installing 13.39
- oil seal, replacing 13.40

Cylinder bore
- measuring 13.47

Drive belt
- installing 13.34

Engine speed sensor
- installing 13.43

Idle pulley
- removing 13.33

Ignition timing sensor
- installing 13.42

Oil pan
- removing 13.33

Pilot bearing
- removing/installing 13.39

Pistons
- installing 13.48
- measuring 13.47
- pin circlip, removing 13.47
- rings, checking/installing 13.46

Technical data
- chart 13.29

Vibration damper
- removing/installing 13.33

★ NEW INFORMATION since last filming

cardiagn.com

Technical data

Engine code letters	**7A**
Start of production	4-88
Number of cylinders	5
Cubic displacement	2.3 liters
Bore	82.5 mm (3.25 in)
Stroke	86.4 mm (3.40 in)
Compression	10 : 1
Firing order	1-2-4-5-3
Horsepower (SAE BHP)	162 at 6000 RPM
Torque	162 ft lb at 4500 RPM
Valve timing Intake valve opens before **TDC** Intake valve closes after **BDC** Exhaust valve opens before **BDC** Exhaust valve closes before **TDC**	 6° 38° 42° 3°
RON (AKI)	95 (91)
Fuel system	**MPI** (Multi Point Injection)

cardiagn.com

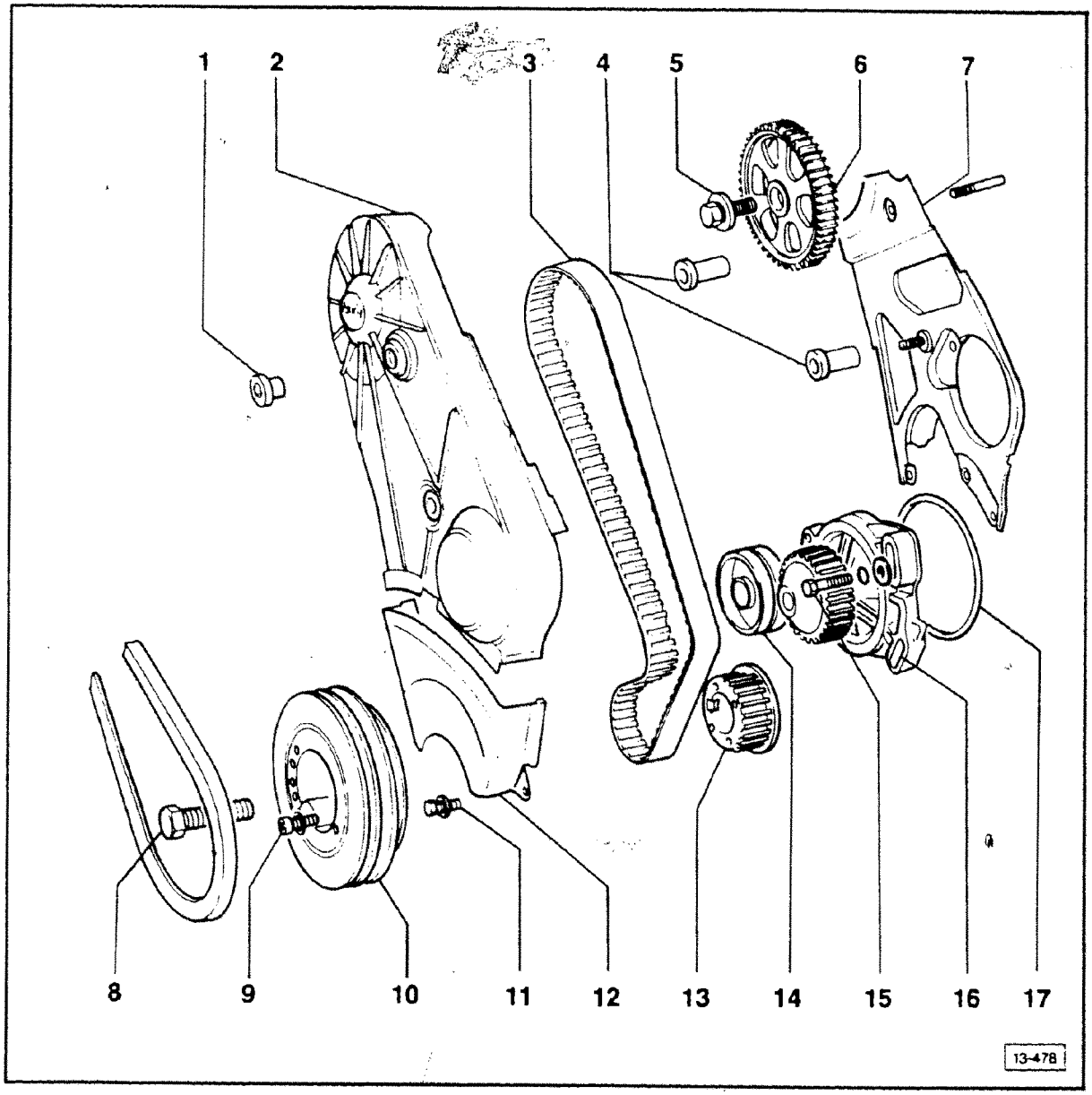

Always replace seals, gaskets, oil seals and O-rings.

Clutch repairs, see Group 30.

Oil pan removal, see Group 17.

Compession checking, see Group 15.

1 — 10 Nm (7 ft lb)

2 — Drive belt cover (upper)

3 — Drive belt
mark running direction before removing
this orientation **MUST** be maintained when reinstalling
installing, see page 13.34

4 — Bushings

5 — 65 Nm (48 ft lb)
use **VW 544** to loosen/tighten

6 — Camshaft drive sprocket

7 — Drive belt cover (lower)

8 — 350 Nm (258 ft lb)
use special tools **2079** and **2084**

9 — 20 Nm (15 ft lb)

cardiagn.com

10 — **Vibration damper**
note position when installing drive belt

11 — **10 Nm (7 ft lb)**

12 — **Drive belt cover (lower)**

13 — **Crankshaft drive belt sprocket**

14 — **Idler pulley**
10 Nm (7 ft lb)

15 — **20 Nm (15 ft lb)**

16 — **Water pump**
turn to left to tension drive belt

17 — **O-ring**
after removing the water pump on older engines it is recommended that the sealing surfaces be cleaned and the O-ring replaced

cardiagn.com

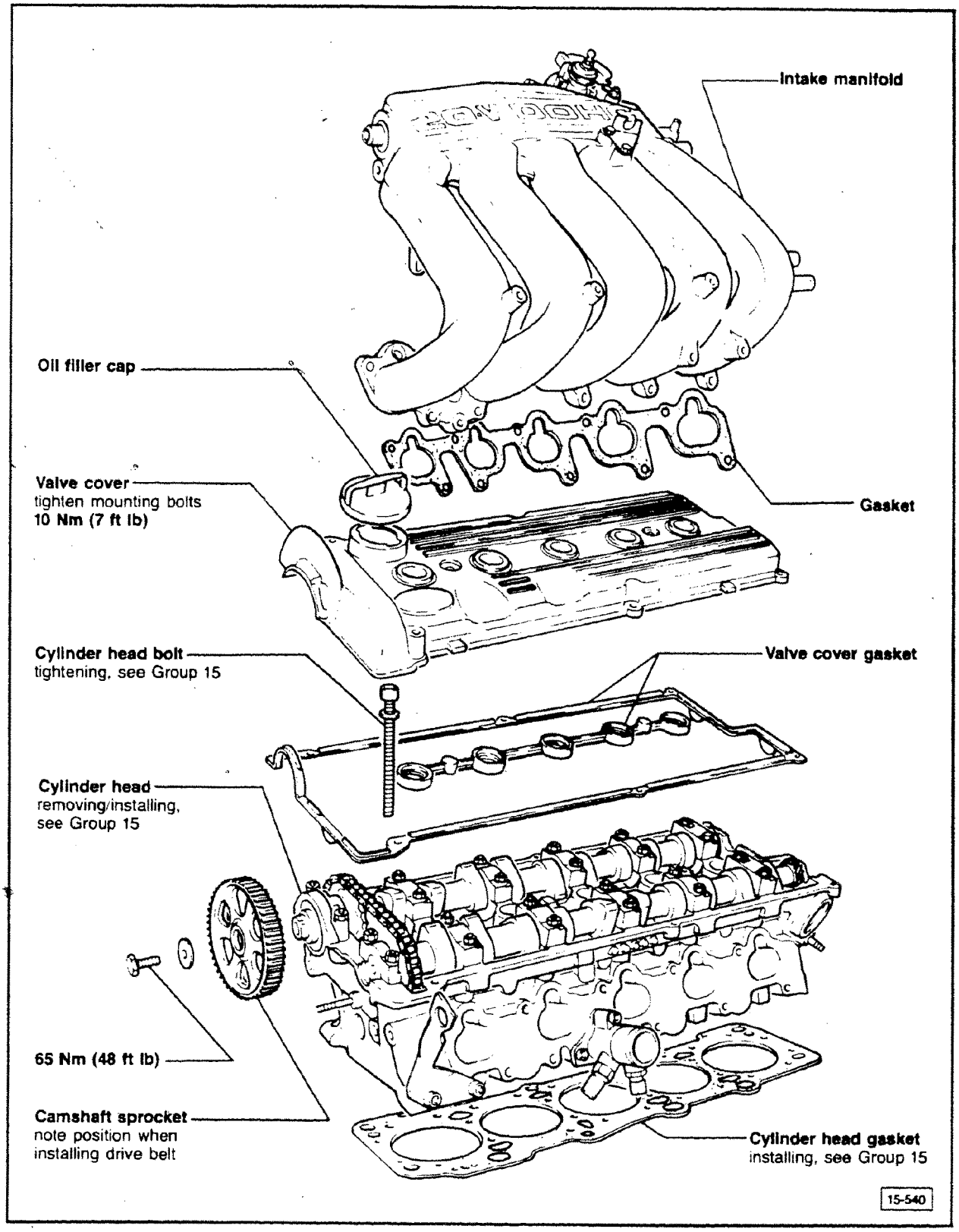

E-5

cardiagn.com

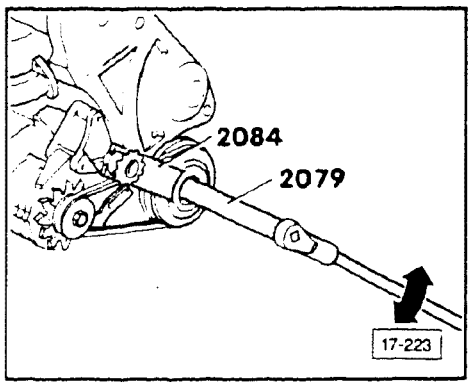

Vibration damper, removing/ installing

Removing

- install vibration damper holding tool **2084**
- break vibration damper center bolt loose using tool **2079**

Installing

- apply sealing compound **AMV 188 001 02** to top thread and bolt contact surface
- install belt and sprocket on crankshaft with vibration damper
- install vibration damper holding tool **2084**
- tighten vibration damper center bolt using tool **2079** and a torque wrench
  - torque to 350 Nm (258 ft lb)

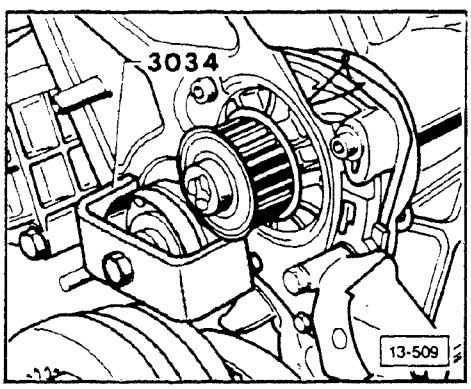

Idler pulley, removing

- remove idler pulley using **3034** puller
  - remove idler pulley only if replacing oil pump or if there is bearing damage to the pulley

Note

To remove the oil pump only the mounting bolt needs to be removed.

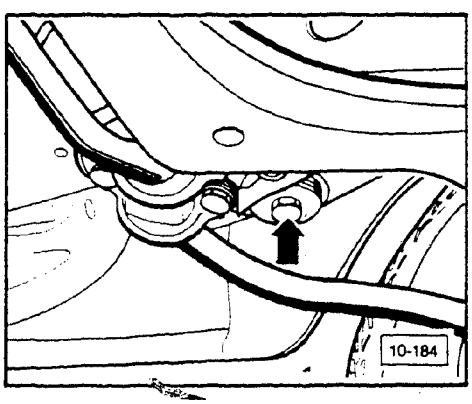

Oil pan, removing

- remove both front bolts (**arrow**) on subframe
- remove oil dip stick
- drain engine oil

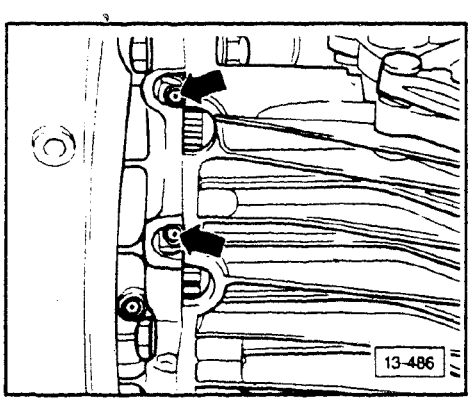

- rotate engine until flywheel recesses align with oil pan bolts
- remove oil pan bolts
- remove oil pan

cardiagn.com

Drive belt, installing

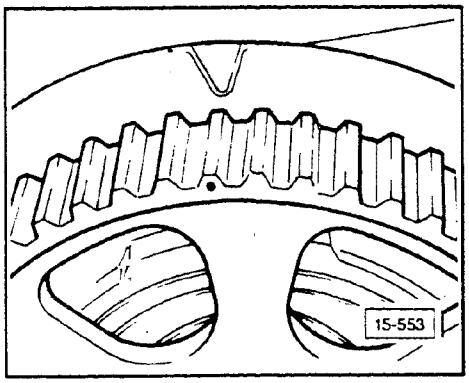

With valve cover installed

- marking on camshaft sprocket must line up with marking on valve cover

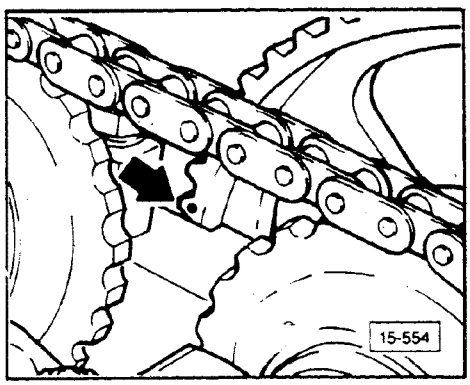

With valve cover removed

- marking on camshaft sprocket (**arrow**) must line up with upper edge of cylinder head

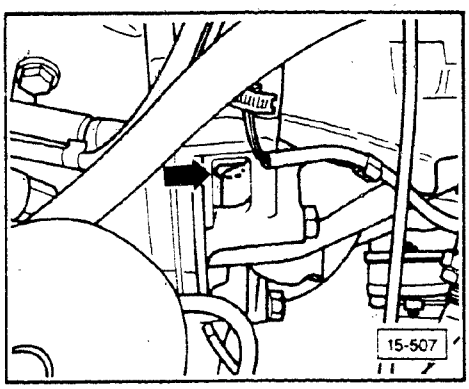

- position crankshaft at **TDC**

With engine installed

- line up **TDC** marking **0** with boss on bell housing (**arrow**)

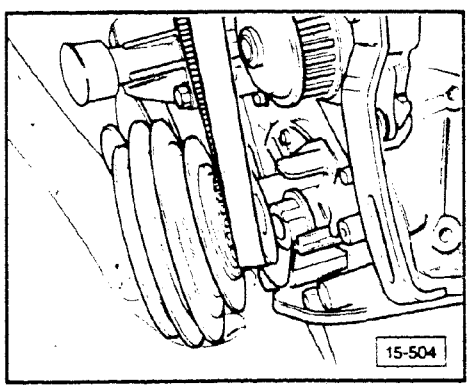

- place drive belt on drive belt sprocket of crankshaft and attach vibration damper to crankshaft

> **CAUTION**
>
> The drive belt must **NOT** get pinched between the oil pump and sprocket when attaching the vibration damper.

E-7

cardiagn.com

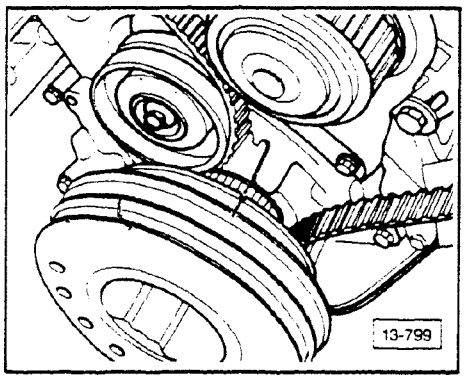

Drive belt, installing with engine removed

- line up notch of vibration damper with adjustment mark on oil pump housing
- install lower drive belt cover (there is an additional adjustment mark)
- install drive belt over idler pulley and water pump on the camshaft sprocket

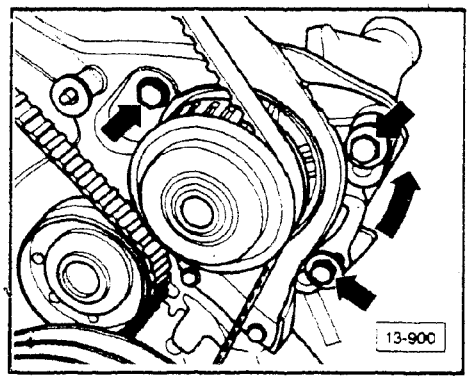

- tighten drive belt by turning loosened water pump to the left

Note

After removing the water pump on older engines it is recommended that the sealing surfaces be cleaned and the o-ring replaced.

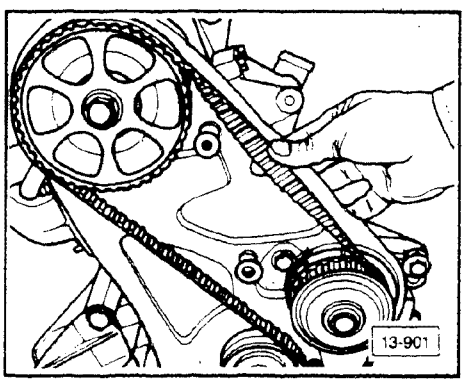

- belt is correctly tensioned when it can be twisted 90° with thumb and index finger between camshaft sprocket and water pump
- tighten water pump
  - 20 Nm (15 ft lb)
- turn crankshaft twice and check setting
- check basic setting of ignition distributor, see Group 28
- install central hydraulic system pump and tension v-belt, see page 13.36

cardiagn.com

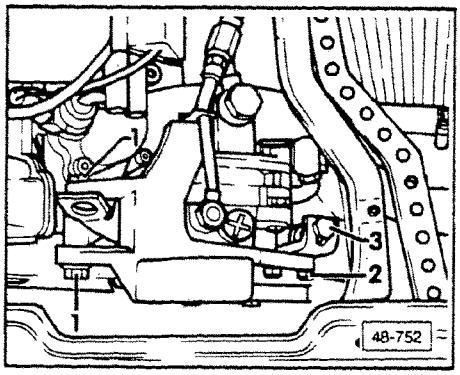

Central hydraulic system pump, v-belt tensioning

- loosen both bolts **1** and lock nut **2**
- turn bolt **3** of tensioner as needed
- check belt tension using thumb
  - must deflect approximately 10 mm (0.4 in.)
- tighten both mounting bolts **1** and lock nut **2**
  - torque to 20 Nm (15 ft lb)

cardiagn.com

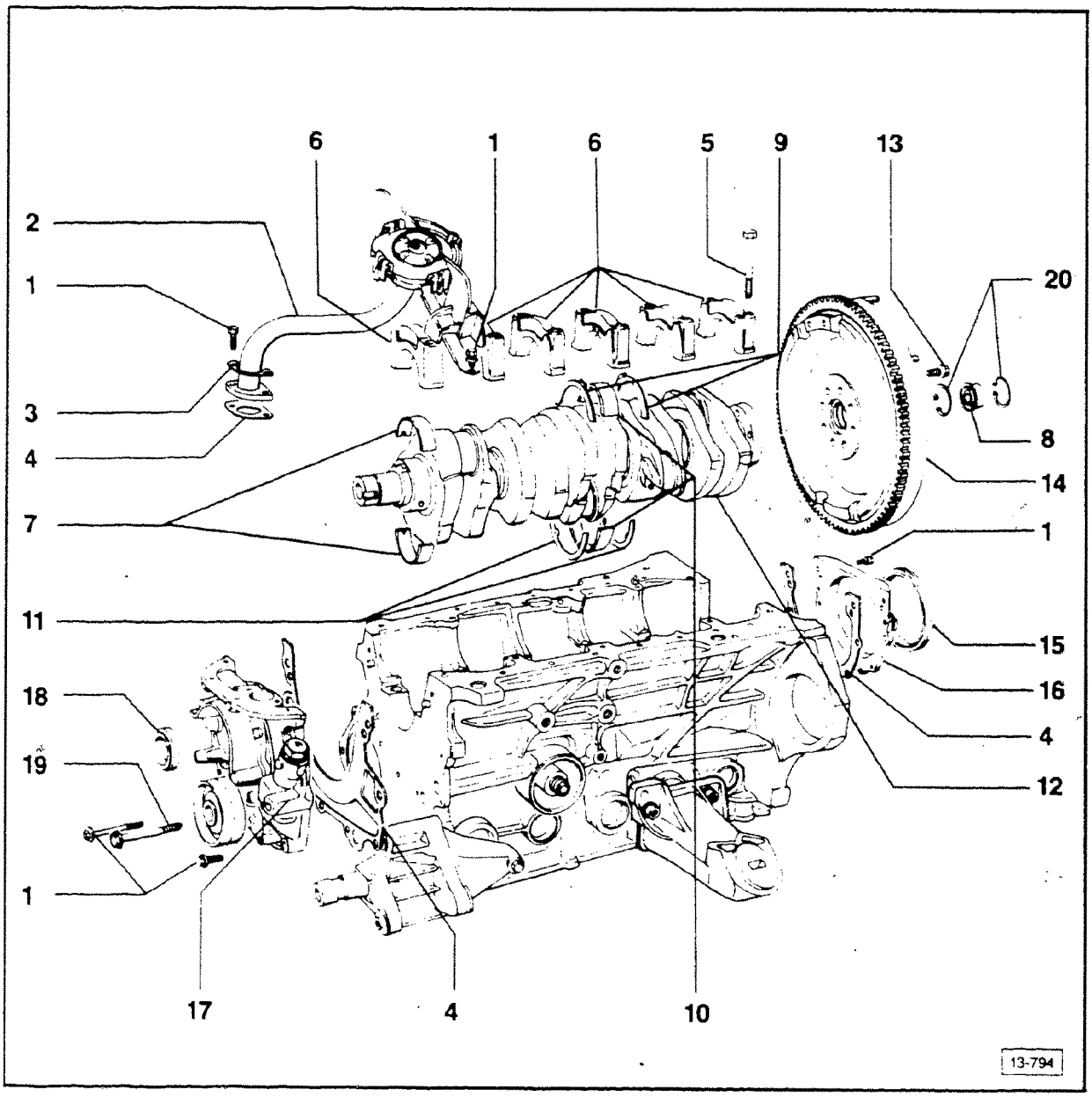

Always replace gaskets, o-rings and oil seals.

Do not turn crankshaft when measuring end play.

1 — **10 Nm (7 ft lb)**

2 — **Suction tube**
tighten to oil pump first

3 — **Lock plate**
always replace

4 — **Gasket**

5 — **65 Nm (48 ft lb)**

6 — **Main bearing caps**
cap #1 — pulley side bearing shell indentations must be positioned next to one another
note center displacement of bores

7 — **Bearing shells 1, 2, 3, 5 and 6**
bearing caps do **NOT** have oil groove. cylinder block side **HAS** oil groove
do **NOT** interchange used bearing shells
retaining tabs must engage in recesses in bearing cap.

8 — **Pilot bearing**
removing/installing, see page 13.39

E-10

cardiagn.com

9 — **Thrust washer**
for bearing cap side, note locating point

10 — **Bearing shell for main bearing #4**
bearing caps do **NOT** have oil groove, cylinder block side **HAS** oil groove

11 — **Thrust washer**
for cylinder block side, note locating point

12 — **Crankshaft**
checking, see page 13.41

13 — **30 Nm (22 ft lb) + 1/4 additional turn (90°)**

> CAUTION
> Use dial type torque wrench. Damage may result from use of a "click" type wrench.

- additional 1/4 (90°) turn may be done in two 45° steps, see page 13.50
- always replace bolts, do not reuse
- threads of replacement bolts are pre-coated with locking compound

14 — **Flywheel**
remove and install using tool **10-201** igntion timing reference pin, see page 13.42

15 — **Rear crankshaft oil seal**
removing/installing, see page 13.39

16 — **Rear oil seal flange**

17 — **Oil pump**
when installing, be sure that shaft engages crankshaft

18 — **Front crankshaft oil seal**
removing/installing, see page 13.39

19 — **10 Nm (7 ft lb)**

20 — **Circlip**

cardiagn.com

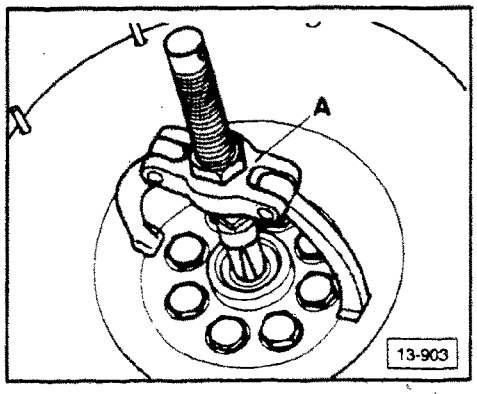

Pilot bearing, removing/installing

- remove circlip
- remove ball bearing with puller and holder (for example, **Kukko 21/2** — 14.5 to 18.5 mm and **Kukko 22-1**)
- install using tools **30-505** and **30-506b**

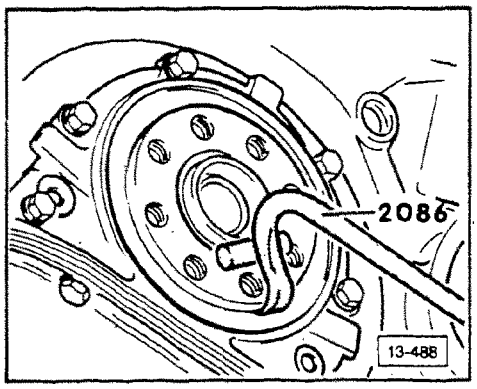

Crankshaft oil seal (flywheel side), removing/installing

- remove oil seal using tool **2086**

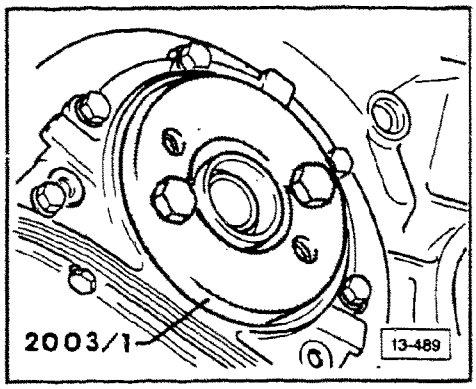

Note

Replacement seal in repair kit is pre-coated. **DO NOT** lubricate.

- install with installation tool supplied with repair kit
- press in oil seal with tool **2003/1** until fully seated

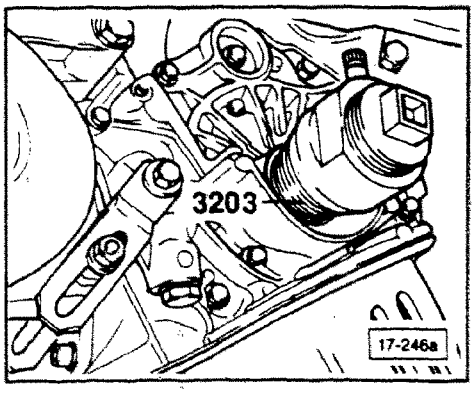

Crankshaft oil seal (vibration damper side), removing/installing

- remove oil seal using tool **3203**

cardiagn.com

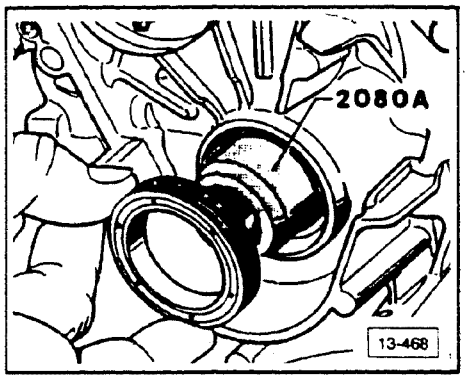

- slip inner seal guide of tool **2080 A** over crankshaft
- coat oil seal lip and outer surface with a light coating of oil
- carefully push seal over seal guide of tool **2080 A**

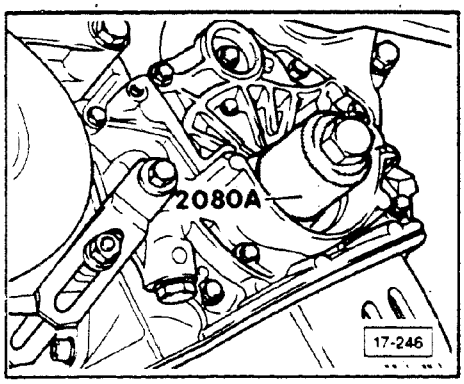

- slide outer sleeve of tool **2080 A** over seal guide/seal
- tighten outer sleeve against seal using vibration damper bolt until seal is seated

Note

If the crankshaft is scored or worn in the area of oil seal contact; press the seal into the casting until it bottoms. If there is no crankshaft wear; press in the seal flush with the surface of the casting.

Crankshaft end play, checking

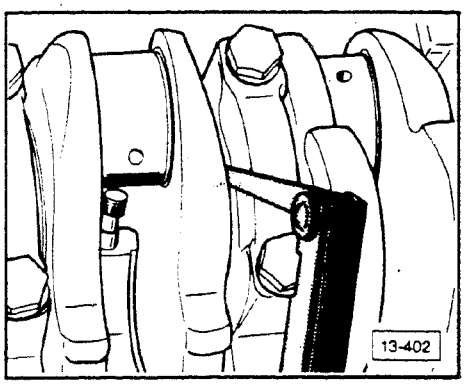

- check with feeler gage on main bearing No. **4**
  - New: 0.07 to 0.23 mm (0.003 to 0.009 in.)
    Wear limit: 0.25 mm (0.010 in.)

cardiagn.com

Stage	Main bearing journal diameter	Connecting rod journal diameter
Standard	57.958-57.978	47.758-47.778
1st undersize	57.708-57.728	47.508-47.528
2nd undersize	57.458-57.478	47.258-47.278
3rd undersize	57.208-57.228	47.008-47.028

Main bearing clearance, checking

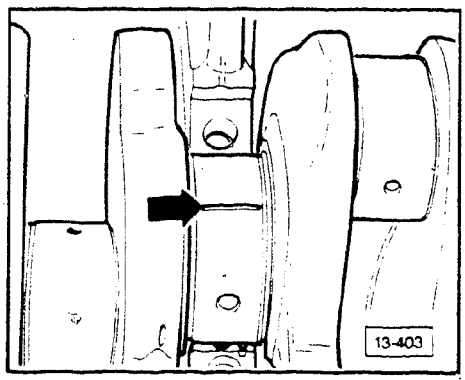

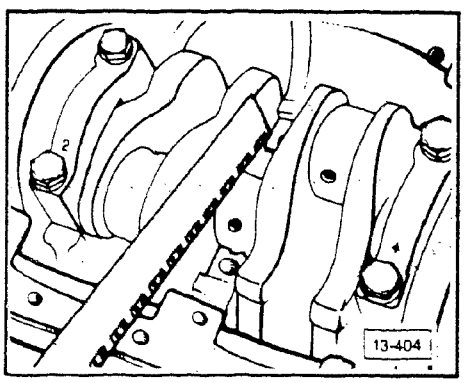

Note

Crankshaft bearing clearance can also be checked with the engine installed.

- remove oil pan
- remove bearing caps
- clean shells and journals
- lay Plastigage® across journal (**arrow**) or in bearing shell
- install bearing caps
  - tighten to 65 Nm (48 ft lb)

CAUTION

Do **NOT** turn crankshaft.

- remove bearing caps again
- compare width of flattened Plastigage® with measuring scale
  - New: 0.018 to 0.058 mm (0.001 to 0.002 in.)
    Wear limit: 0.16 mm (0.006)

cardiagn.com

Ignition timing reference pin, installing

Do **NOT** bend pin when replacing flywheel.

> **CAUTION**
>
> Engine will **NOT** start if reference sensor pin is **NOT** installed in flywheel because control unit will **NOT** receive an impulse.

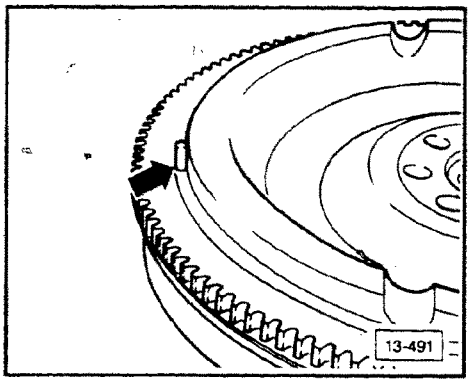

- drive timing sensor pin into flywheel until it is flush with raised surface of flywheel (**arrow**)

Ignition timing reference sensor, installing

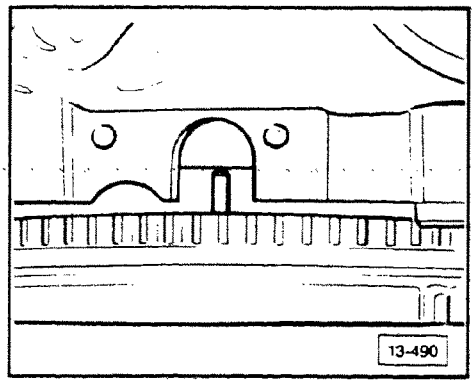

- turn flywheel until reference pin is in center of opening for timing reference sensor

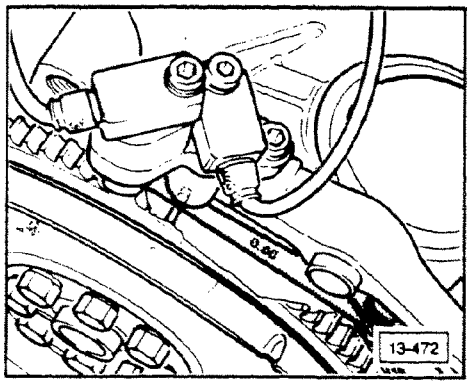

- install sensor
- measure gap between reference pin and timing sensor using feeler gage
  - gap: 0.50 to 1.25 mm (0.020 to 0.049 in.)

cardiagn.com

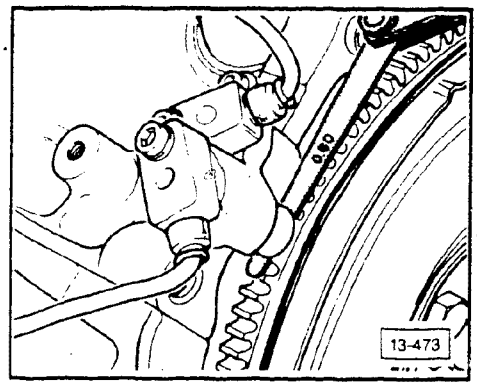

Engine speed sensor, installing

- measure gap between flywheel teeth and engine speed sensor using feeler gage
  - gap: 0.50 to 1.25 mm (0.020 to 0.049 in.)

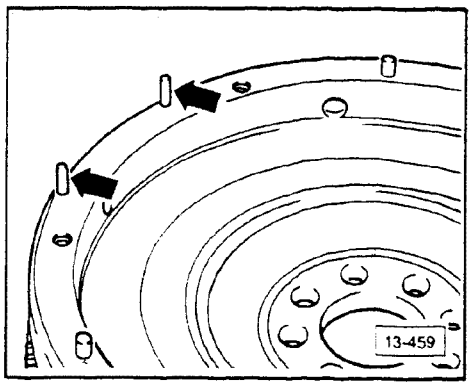

Reference pins for VW 1367 magnetic pickup, installing

- carefully press pins into flywheel
  - pin height: 29.5 mm to 30.5 mm (1.16 to 1.2 in.)

CAUTION

Do **NOT** bend these pins when removing or installing engine or transmission.

cardiagn.com

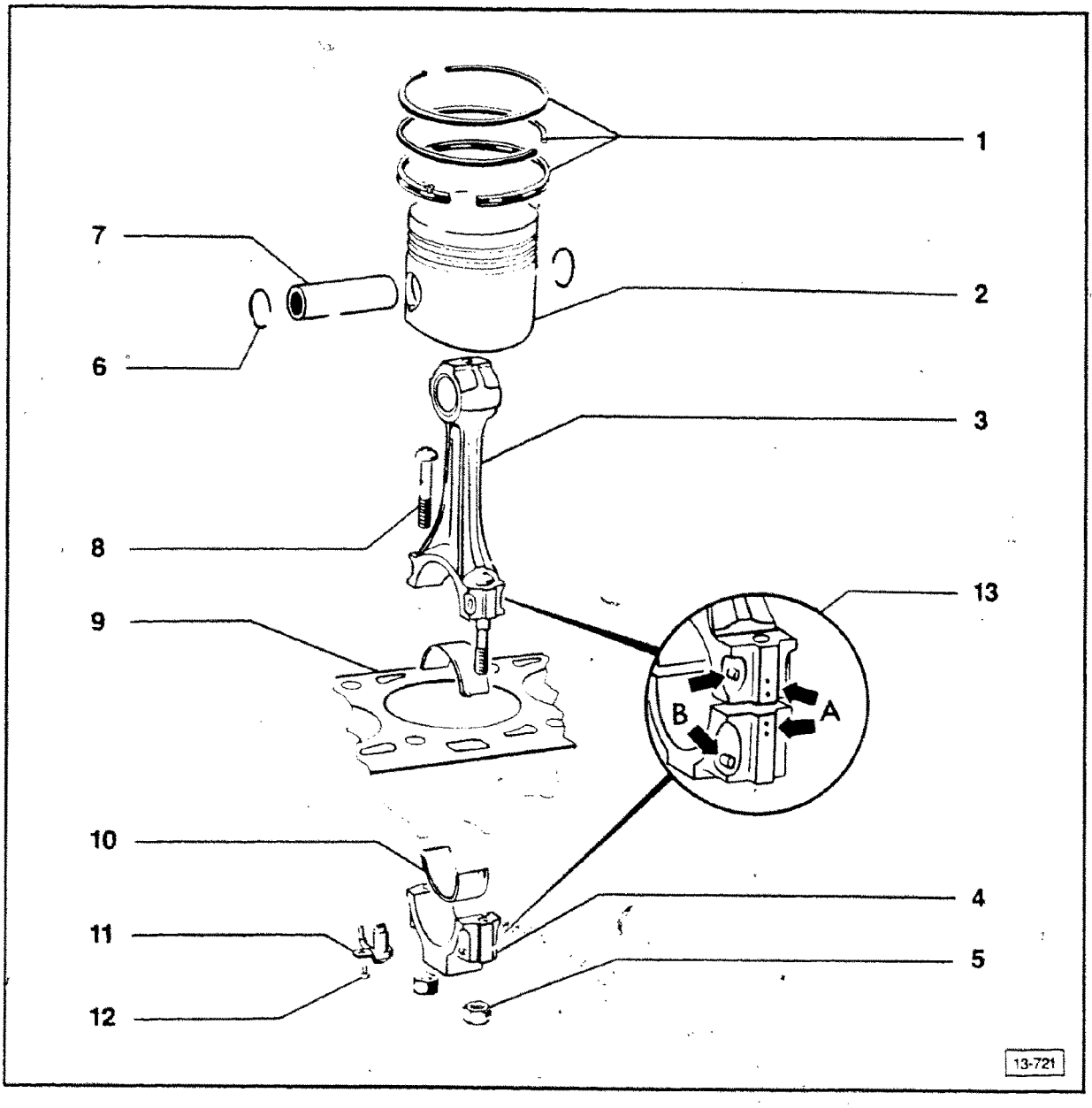

1 — **Piston rings**
checking side clearance, see page 13.46
checking ring end gap, see page 13.46
removing/installing, see page 13.46

2 — **Pistons**
checking, see page 13.47
installing, see page 13.48
dimensions, see page 13.47

3 — **Connecting rod**
matched to bearing cap, do **NOT** intermix.
checking, see page 13.49

4 — **Connecting rod bearing cap**
matched to connecting rod, do **NOT** intermix.

5 — **30 Nm (22 ft lb) + 1/4 additional turn (90°)**
lubricate contact surfaces before torquing.

6 — **Circlip**
removing, see page 13.47

7 — **Piston pin**
if tight, heat piston to approximately 60°C (140°F)
install using tool **2070**

8 — **Connecting rod bolt**

9 — **Cylinder block**
bore checking, see page 13.47

10 — **Bearing shell**
checking, see page 13.49

11 — **Oil jet spray**
for piston cooling

12 — **10 Nm (7 ft lb)**
install using **AMV 188 001 02**
locking compound

13 — **Note assembly relationship**

cardiagn.com

THIS FRAME INTENTIONALLY LEFT

BLANK

cardiagn.com

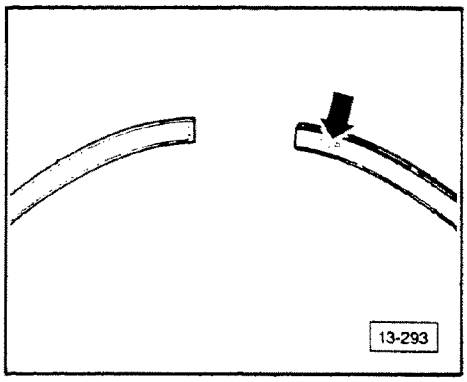

Piston ring, installing

- "**TOP**" inscription must face toward top of piston
- chamfer on plain compression ring must face toward top of piston
- indentation on stepped scraper ring must face toward bottom of piston

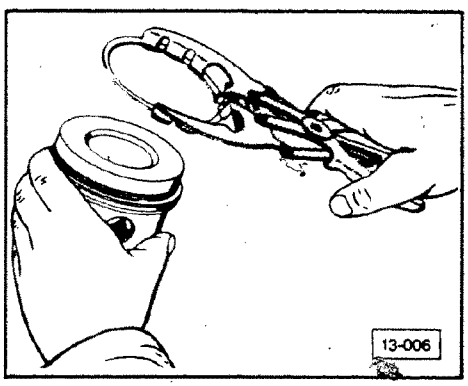

- spread rings (using tool **VW 121B** for example) and install following above orientations

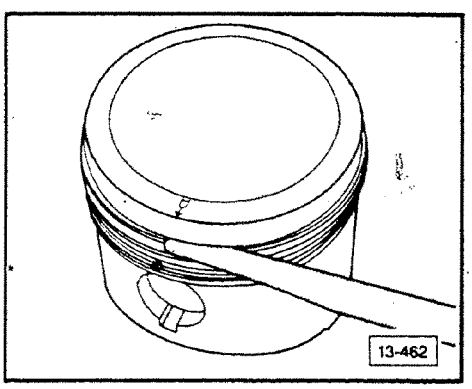

Piston ring side clearance, checking

- insert feeler gage between piston ring and ring groove in piston
  - New: 0.02 to 0.08 mm (0.0008 to 0.003 in.)
    Wear limit: 0.1 mm (0.004 in.)

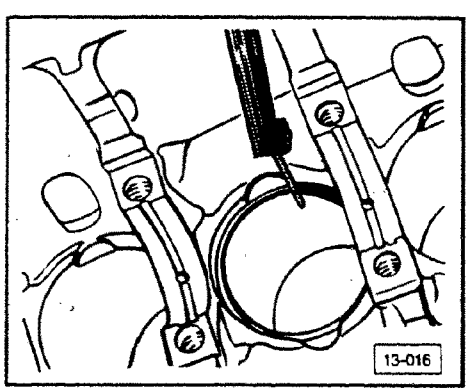

Piston ring end gap, checking

- squarely insert piston ring into cylinder bore approximately 15 mm (0.6 in.) from top
  - New: 0.2 to 0.5 mm (0.008 to 0.020 in.)
    Wear limit: 1.0 mm (0.039 in.)

cardiagn.com

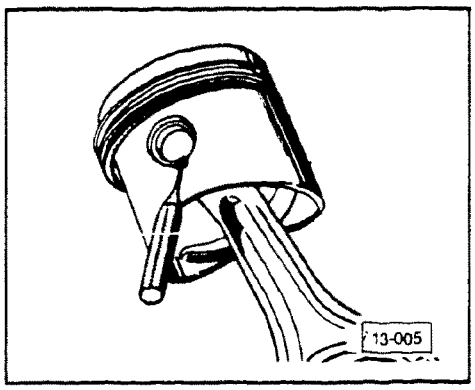

Piston pin circlip, removing

- pry out using tool as shown

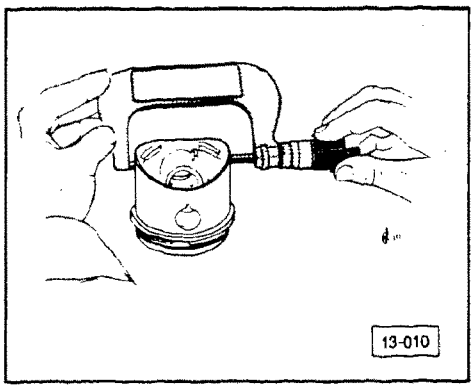

Piston, checking

Dimensions		
Size	Piston diameter	Cylinder bore
Standard	80.98 mm	81.01 mm
1st oversize	81.23 mm	81.26 mm
2nd oversize	81.48 mm	81.51 mm

- measure piston diameter approximately 12 mm (0.47 in.) up from lowest edge of piston skirt, 90° to piston pin axis
  - tolerance: 0.04 mm (0.0016 in.) maximum

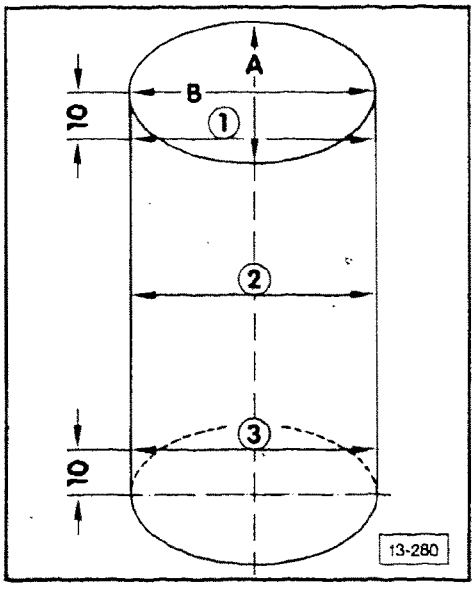

Cylinder bore, checking

Measurement locations (approximate):
1 = 10 mm (.375 in.) from top of cylinder
2 = middle point of cylinder
3 = 10 mm (.375 in.) from bottom of cylinder

- using 50-100 mm inside micrometer; take diameter measurements at cylinder heights **1**, **2** and **3**
- repeat measurements at same cylinder heights but 90° from first measurements
  - tolerance: 0.08 mm (0.003 in.) maximum

CAUTION

Do **NOT** measure cylinder bore when cylinder block is mounted to work bench with engine mount **VW 540**. Measurement accuracy could be affected by cylinder block distortions (block bends slightly when hung from mount).

cardiagn.com

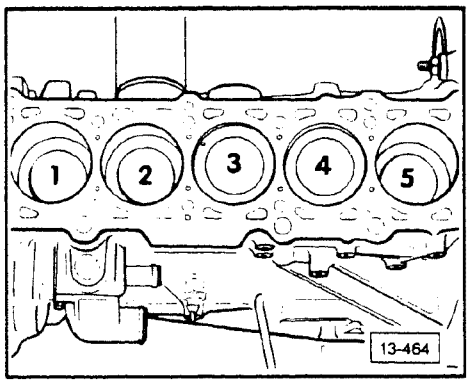

Pistons, installed position

- arrows on tops of pistons **MUST** point toward vibration damper

> **CAUTION**
>
> Clearly identify (mark) each piston assembly before removal. Do **NOT** mix pistons in cylinders, piston **MUST** be re-installed in cylinder it was removed from.

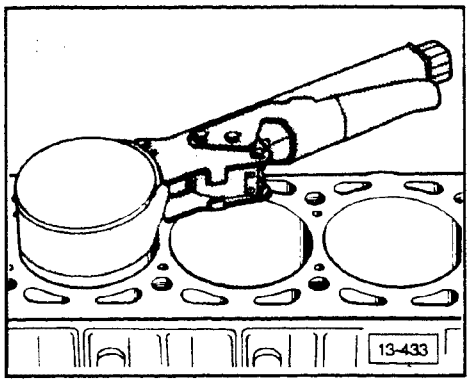

Piston, installing

- with piston ring gaps straggered 120° compress rings (using tool **US 1008 A** for example)
- squarely insert compressed assembly into cylinder bore until tool is flush with top of block and piston is properly aligned
- push piston assembly out of tool and into cylinder until top of piston is at least even with top of block

cardiagn.com

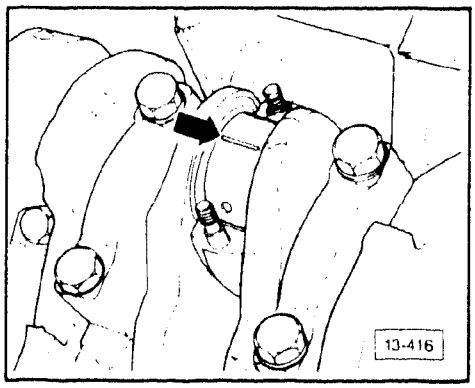

Connecting rods, checking

Note

Connecting rod bearing clearance can be checked with the engine installed.

- remove connecting rod bearing cap
- clean bearing shells and journal
- lay Plastigage® across journal (**arrow**)
- re-install connecting rod bearing cap w/bearing
  - torque to 30 Nm (22 ft lb)

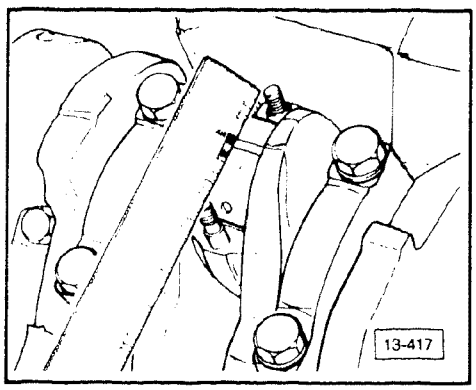

CAUTION

Do **NOT** turn crankshaft.

- remove connecting rod bearing cap again
- compare flattened width of Plastigage® with measuring scale
  - New: 0.010 to 0.058 mm (0.0004 to 0.002 in.)
    Wear limit: 0.12 mm (0.005 in.)

Plastigage measuring ranges:	
Green (PG-1)	0.025 to 0.076 mm (0.001 to 0.003 in.)
Red (PR-1)	0.050 to 0.150 mm (0.002 to 0.006 in.)
Blue (PB-1)	0.100 to 0.230 mm (0.004 to 0.009 in.)

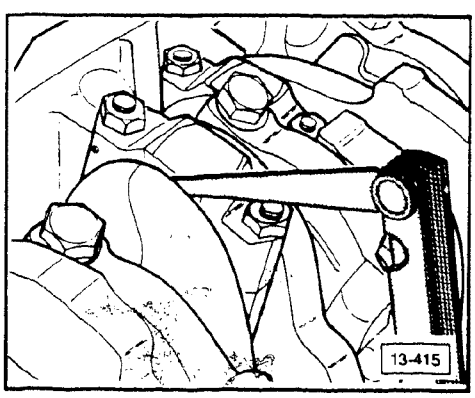

Connecting rod side clearance, checking

- measure clearance between crankshaft throw and rod bearing cap using feeler gage
  - Wear limit: 0.4 mm (0.016 in.)

cardiagn.com

New flywheel mounting bolts, revised tightening torque

> **CAUTION**
>
> Part numbers are for reference only. Always check with your Parts Department for latest information

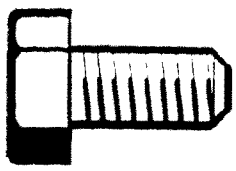

13 A037

Effective immediately, flywheel bolt, Part No. **N 902 061 01 without** shoulder is no longer available.

Old:

100 Nm (74 ft lb)

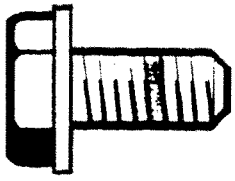

13 A036

The replacement bolt Part No. **N 902 061 03 with** shoulder, requires a revised tightening torque for installation.

New:

30 Nm (22 ft lb) + 1/4 (90°) turn

> **CAUTION**
>
> Use dial type torque wrench. Damage may result from use of a "click" type wrench.

- additional 1/4 (90°) turn may be done in two 45° steps
- always replace bolts, do not reuse
- threads of replacement bolts are pre-coated with locking compound

cardiagn.com

Index

4-cylinder

Camshaft
- assembly 15.5
- bearing cap, installation 15.6
- end play, checking 15.6
- oil seal, removing/installing 15.9
- removing/installing 15.7

Carbon deposits
- fuel quality 15.25

Compression pressure values
- checking 15.4

Cylinder head
- assembly 15.2
- components 15.5
- distortion, checking 15.3
- installing 15.3

Hydraulic valve lifters
- checking 15.8

Valves
- assembly 15.5
- dimensions 15.10
- guides, checking/replacing 15.12
- seats, refacing 15.10
- stem seals, replacing 15.13

5-cylinder

Camshaft
- assembly 15.17
- axial play, checking 15.18
- bearing caps, installing 15.18
- identification 15.18
- oil seal, removing/installing 15.21
- removing/installing 15.22

Carbon deposits
- fuel quality 15.25

Compression pressure
- checking 15.16

Cylinder head
- assembly 15.14
- bolts, removing/installing 15.15
- distortion 15.15
- installing 15.15

Hydraulic valve lifters
- checking 15.20

Valves
- assembly 15.17
- checking for wear 15.23
- dimensions 15.18
- guides, checking 15.23
- guides, replacing 15.23
- seats, refacing 15.19
- stem seal, removing/installing 15.24

Coupe

Camshaft
- axial/radial clearance, checking 15.39
- oil seal, removing/installing 15.38
- removing/installing 15.40

Cylinder compression
- testing 15.29

Cylinder head
- checking/installing 15.28
- component layout 15.27

Hydraulic lifters
- checking 15.37

Valve
- exhaust valves, discarding 15.33
- guides, checking/installing 15.34
- refacing 15.33
- seats, refacing 15.32
- stem seals, installing 15.36
- train, component layout 15.30

cardiagn.com

Notes

- The cylinder head can be removed with the engine installed.
- When installing a rebuilt cylinder head, oil the contact surfaces between the cam lobes and the lifters.

Compression pressures, checking page 15.4

CAUTION

Coolant/antifreeze **must not** be reused when replacing engine, cylinder head, cylinder head gasket, radiator and heater core.

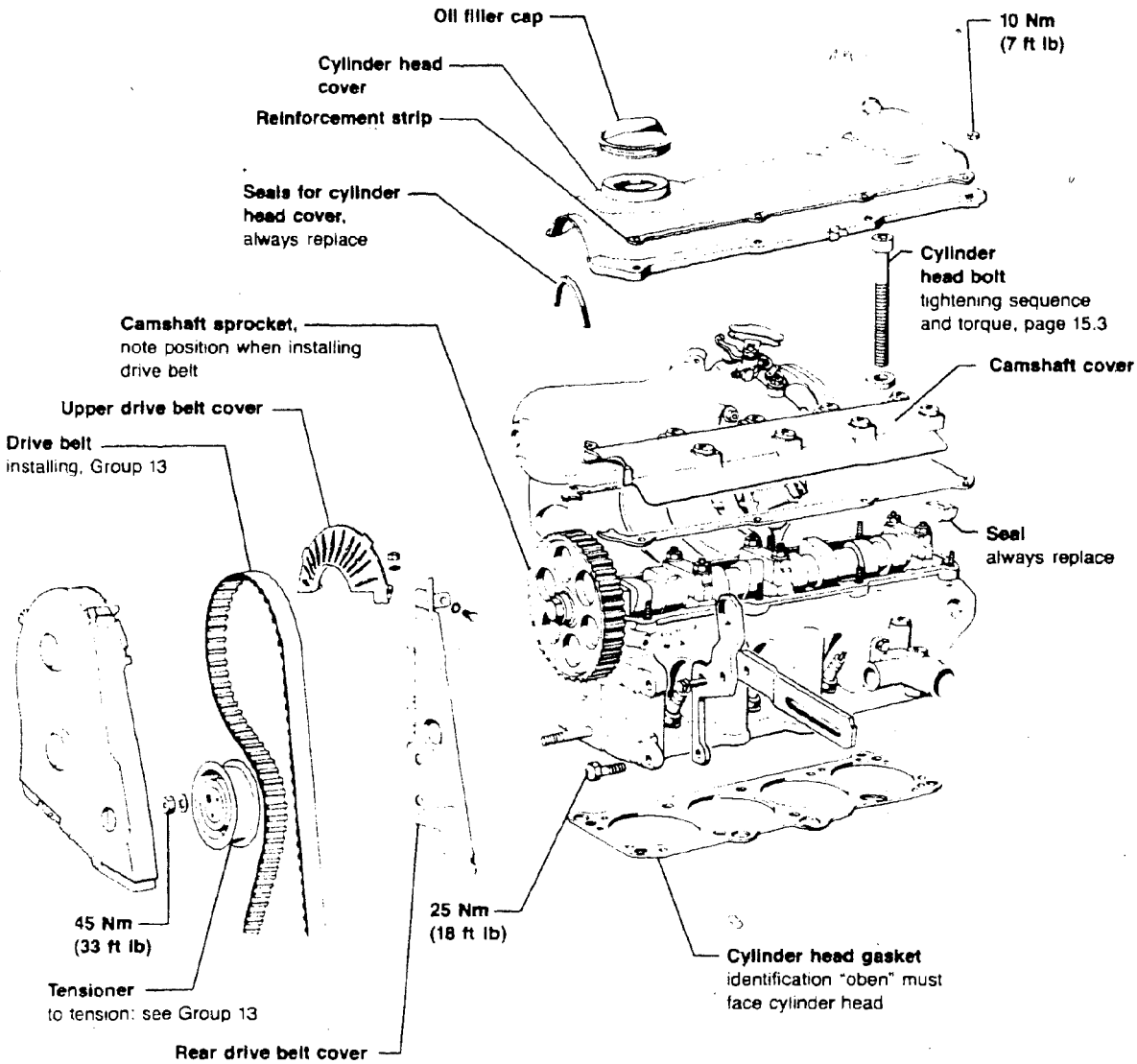

15-703

cardiagn.com

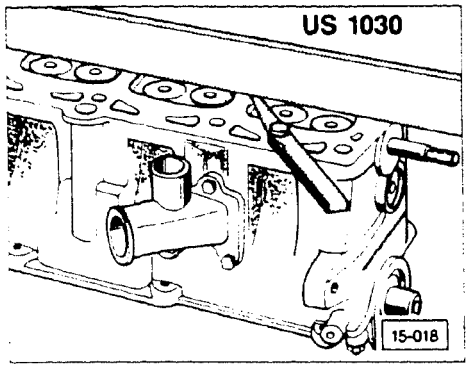

Cylinder head, distortion checking

Note

Cylinder head should be clean and free of gasket material before performing this check.

- use straight edge **US 1030** and feeler gauge to check for distortion
  - maximum permissible distortion allowed: 0.1 mm (0.004 in)

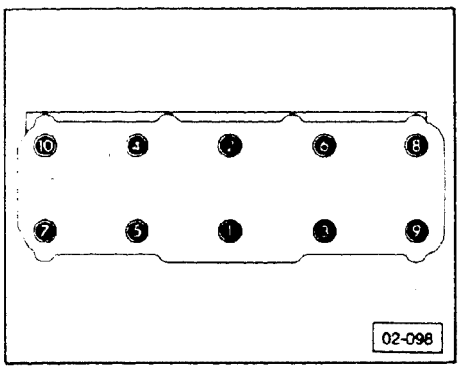

Cylinder head, installing

- position cylinder head on engine block
- install cylinder head
- note proper positioning
- fit all cylinder head bolts
- **hand tighten only**

- tighten cylinder head bolts in three-step sequence as follows:

Tightening torque: Engine cold

- tighten in sequence to 40 Nm (29 ft lb)
- tighten in sequence to 60 Nm (43 ft lb)
- tighten in sequence additional 1/2 turn (180°) further in one movement (two 90° turns are permissible)

- remove cylinder head bolts in reverse sequence

Note

It is not necessary to re-tighten cylinder head bolts during scheduled maintenance or after performing repairs.

cardiagn.com

Compression pressure, checking

Check these first:

- engine oil temperature minimum **30°C (86°F)**
- throttle plate completely open
- ignition coil lead removed from ignition distributor and connected to ground
- all spark plugs removed

■ use pressure recorder **US 1120** to measure compression

Note

See operating instructions for recorder **US 1120**

■ operate starter until recorder shows **NO** further pressure increase

Compression pressure values

Engine code letters	new	wear limit
3A	10.5-13.5 bar (152-196 psi)	7.5 bar (109 psi)

- permissible difference between all four cylinders: 3 bar (44 psi)

cardiagn.com

THIS FRAME INTENTIONALLY LEFT

BLANK

cardiagn.com

Camshaft, cylinder head, valves

Note

Heads with fine cracks between valve seats and plug threads can be installed again without reducing engine service life provided that cracks are small and not more than 0.5 mm wide or when only the first coils of the plug threads are cracked.

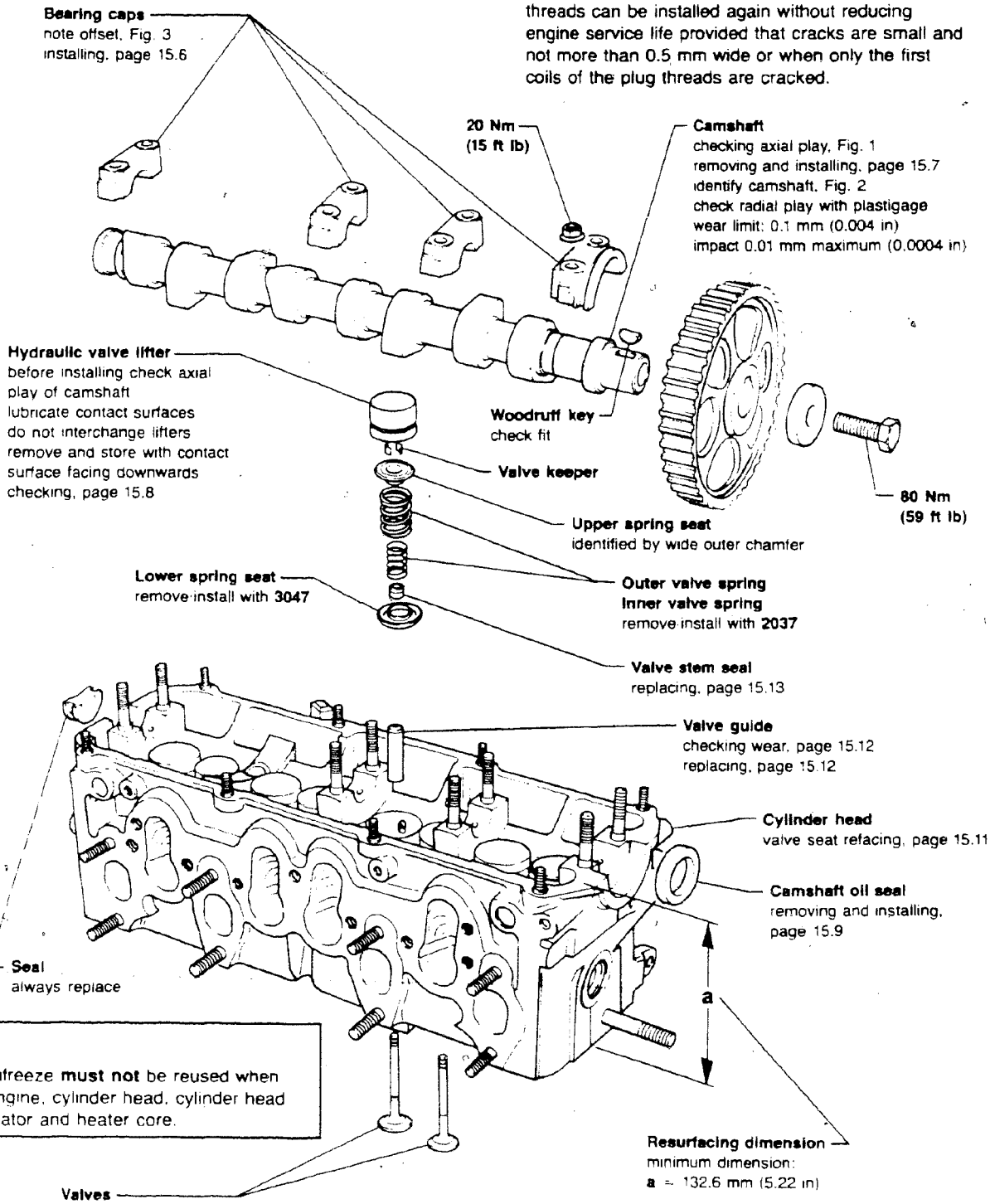

CAUTION

Coolant antifreeze **must not** be reused when replacing engine, cylinder head, cylinder head gasket, radiator and heater core.

F-6

15-696

cardiagn.com

Camshaft

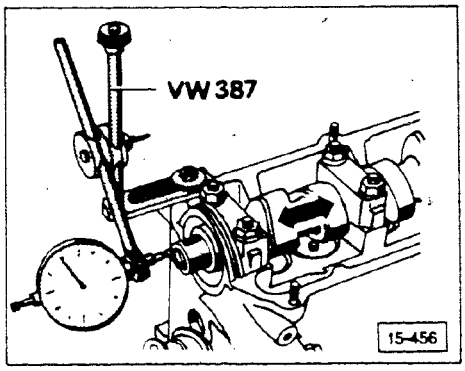

▶ **Fig. 1 Checking axial play**

- measure with lifters removed and with bearing caps **1** and **5** installed.
  Install dial indicator adaptor **VW 387** as shown.
- move camshaft back and forth longitudinally (**arrow**) to measure axial play
  - wear limit 0.15 mm (0.006 in)

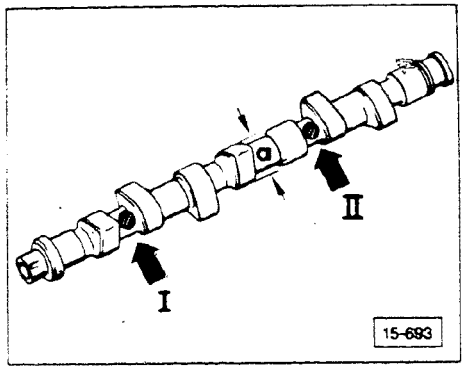

▶ **Fig. 2 Camshaft identification**

- base circle diameter of cam
  a = 34.0 mm (1.3 in)

Engine Code	Arrow I	Arrow II
3A	G	026

Camshaft bearing caps

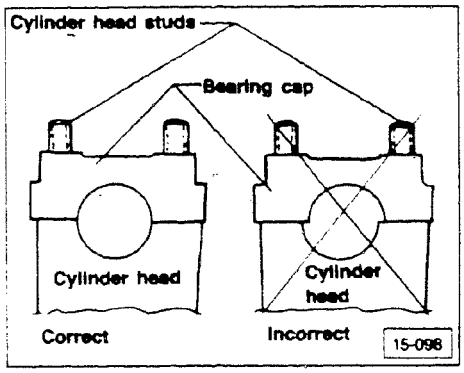

▶ **Fig. 3 Installation position**

- before installing camshaft, place bearing caps into position to determine correct installation position (as shown)

cardiagn.com

Camshaft, installing and removing

Removing

- remove upper drive belt cover
- remove cylinder head cover
- turn crankshaft to TDC on cylinder no. **1**
- slacken and remove drive belt

- remove camshaft sprocket
- remove woodruff key from camshaft

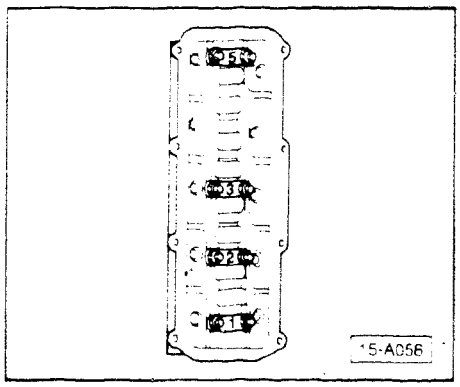

- remove bearing caps **1** and **3**
- remove bearing caps **2** and **5** alternately and diagonally

Installing

Note

Cams lobes for cylinder No. 1 must point upwards when installing camshaft.

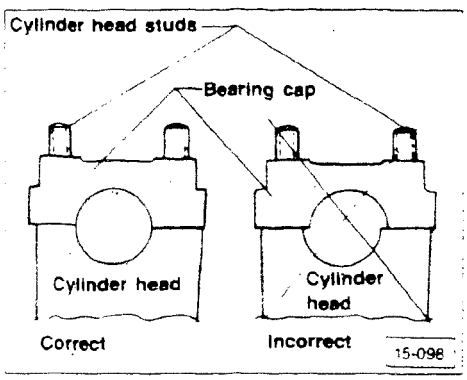

Note

Before you install the camshaft, note the possible offset if the bearing caps are installed backwards. Set in place prior to installation to position properly.

- mount bearing caps **2** and **5**
  - tightening torque: 20 Nm (15 ft lb)
- mount bearing caps **1** and **3**
  - tightening torque: 20 Nm (15 ft lb)
- mount camshaft sprocket
  - tightening torque: 80 Nm (59 ft lb)

cardiagn.com

Hydraulic valve lifters, checking

Note

Always place removed valve lifter on a clean surface with the contact surface (camshaft side) facing downward.

Always replace complete valve lifter (valve lifter cannot be adjusted or repaired).

It is normal if you hear intermittent valve noise when you first start the engine.

- run engine until radiator fan comes on at least once
- bring engine speed to approximately 2500 RPM for 2 minutes

If valve lifter is still noisy, replace as follows:

- remove cylinder head cover
- turn crankshaft pulley bolt clockwise until cam lobes of cylinder to be checked point upward

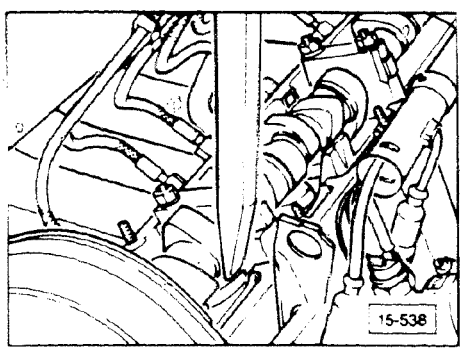

- push down against valve lifter with light pressure using a suitable wood stick. If valve lifter can be pushed down more than 0.1 mm (0.004 in) replace lifter.

CAUTION

After replacing lifters, do not start engine for approximately 30 minutes, because the valves may hit the piston. Lifter must be allowed to bleed down to proper adjustment.

cardiagn.com

Camshaft oil seal, removing and installing

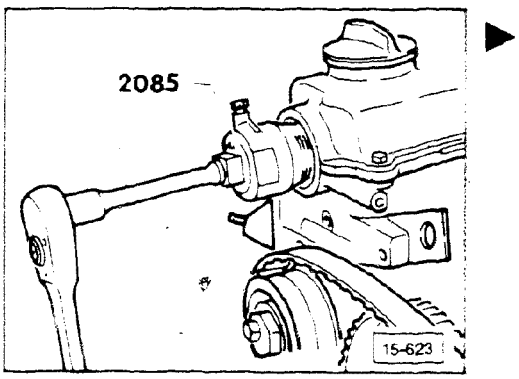

Removing

- remove upper drive belt cover
- set crankshaft to TDC on cylinder no. 1
- slacken drive belt and remove

- remove camshaft sprocket
- remove woodruff key from cam
- install mounting bolt (with washer) for camshaft sprocket up to stop

- remove inner part of oil seal extractor **2085** two turns (approximately 3.0 mm) from outer part of tool and lock with screw
- lubricate threaded head of oil seal extractor
- mount extractor and push in as far as possible into oil ring

- loosen knurled screw and turn inner part of puller against camshaft until oil seal is pulled out
- clamp extractor in vise and remove oil seal with pliers

Installing

- coat seal seat and seal lips lightly with oil
- press oil seal into cylinder head until **flush** using **10-203**

cardiagn.com

Valve dimensions

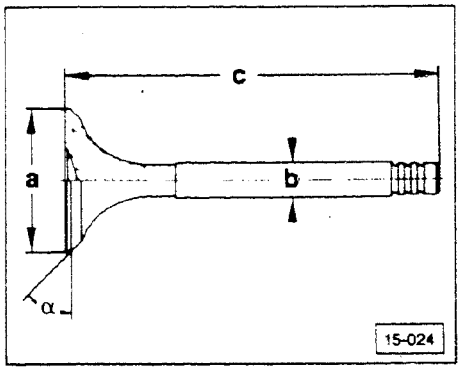

▶ **Fig. 4 Valve dimensions, mm**

	Intake valve	Exhaust valve
Diameter **a**	40.0	33.0
Diameter **b**	7.97	7.95
Length **c**	91.0	90.8
Angle α	45°	45°

CAUTION

Do not reface **valves** on a machine; **lap by hand only if necessary.**

Valve seats, refacing

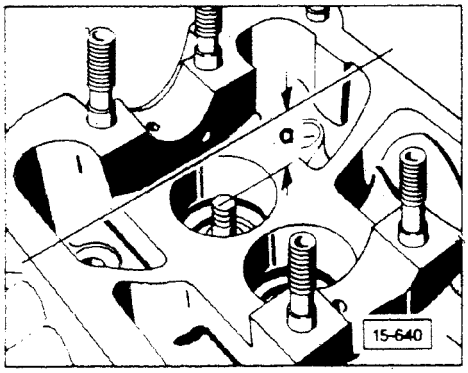

Minimum dimension — intake valve = 33.8 mm Minimum dimension — exhaust valve = 34.1 mm
measure distance **a** – minimum dimension
= maximum permissible refacing dimension **b**

▶ Calculating the maximum permissible refacing dimension

- insert valve and hold firmly against valve seat
- measure distance **a** between end of valve shaft and upper edge of cylinder head
- calculate refacing dimension **b** (see following illustrations) using the measured distance **a** (above) and:

▶ **Minimum dimension**

If the measured distance **a** is smaller than the minimum dimension, the hydraulic valve lifter will not work and the cylinder head must be replaced.

cardiagn.com

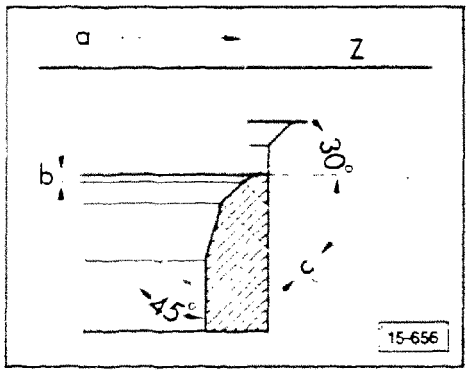

Intake valve seat, refacing

- **a** = 0 39.2 mm (1.543 in)
- **b** = maximum permissible refacing dimension (calculated on page 15.10)
- **c** = approximately 2.0 mm (0.079 in)
- **Z** = cylinder head lower edge
- **30°** = upper correction angle
- **45°** = valve seat angle

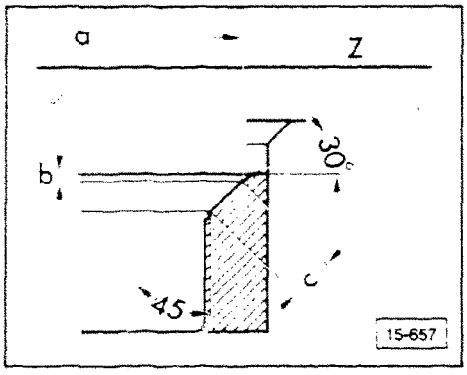

Exhaust valve seat, refacing

- **a** = 32.4 mm (1.275 in)
- **b** = maximum permissible refacing dimension (calculated on page 15.10)
- **c** = approximately 2.4 mm (0.094 in)
- **Z** = cylinder head lower edge
- **30°** = upper correction angle
- **45°** = valve seat angle

Exhaust valve **seats** have a reduced diameter. Take care when refacing the seats to ensure that this dimension is not enlarged beyond the specification.

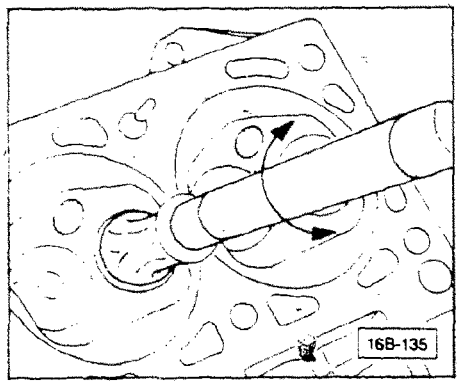

Valve, lapping

Note

Do not reface the valves on a machine; lap by hand only if necessary.

- apply lapping compound to valve seat surface, insert valve and rotate in both directions (**arrow**) using lapstick

CAUTION

After lapping valve, remove all traces of lapping compound.

cardiagn.com

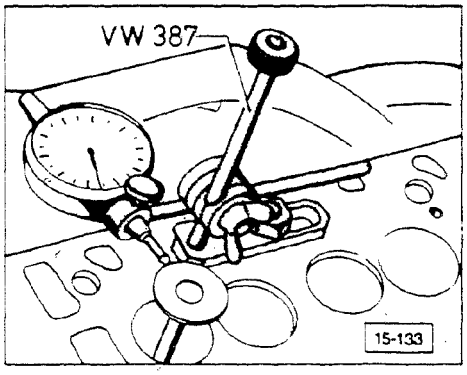

Valve guides, checking

Check these first:
remove any combustion residue with suitable cleaner
use dial indicator adaptor **VW 387**

- insert **new** valve in guide. End of valve stem must be flush with end of valve guide

Note

Install intake or exhaust valves in their respective guides only.

- push-pull valve back and forth against dial indicator. Dial indicator reading shows valve guide wear

	Intake valve	Exhaust valve
Dial indicator reading, maximum	1.0 mm (0.039 in)	1.3 mm (0.051 in)

Valve guides, replacing

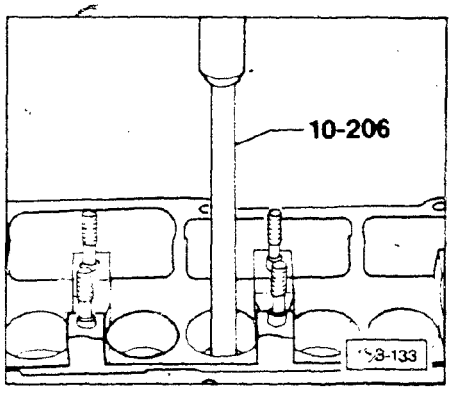

Note

Cylinder heads on which the valve seat surface can no longer be refaced or cylinder heads that have been refaced down to the minimum dimension cannot be repaired further.

- press out worn valve guides from camshaft side of head using **10-206**.

Note

Valve guides with collar version: press out from combustion chamber side of head.

- coat new guides with oil and press into cold cylinder head from camshaft side. Press guides in completely

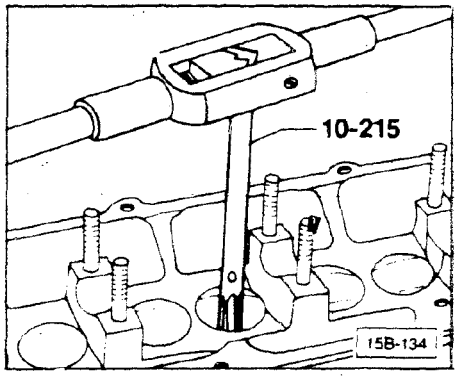

Note

When valve guide shoulder has made contact, do not increase pressure above 1 ton or the valve guide shoulder may shear off

- ream valve guide using cutting oil and hand reamer **10-215**
- reface valve seat

F-13

cardiagn.com

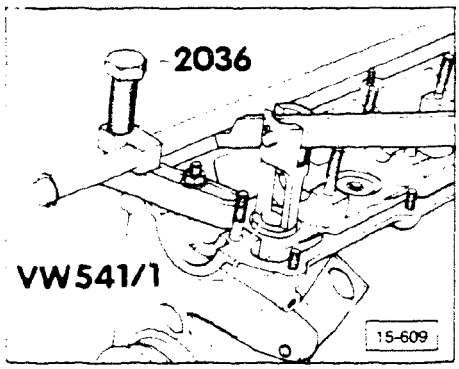

Valve stem seals, replacing (with cylinder head installed)

- remove camshaft and lifters
- remove spark plugs
- set piston of respective cylinder to the bottom dead center position

- insert installation tool **2036** and adjust position of studs
- insert leak down tester **US 1106** or equivalent into spark plug hole and apply steady air pressure of at least 6 bar (87 psi) gauge pressure
- remove valve springs with tool **VW 541/1**

CAUTION

Do not install seal without using plastic seal protector, otherwise seal will be damaged and engine will use excessive oil.

Note

If the valve keepers are hard to remove, loosen them by tapping lightly on the lever of the fitting tool.

- remove valve stem seals using tool **3047A**

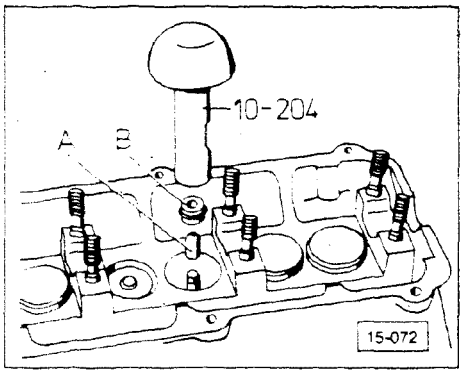

- place plastic sleeve **A** on valve stem
- lubricate valve stem seal **B**, place on fitting tool **10-204** and push carefully on to valve guide

cardiagn.com

CONTINUED IN THE

BEGINNING OF NEXT ROW

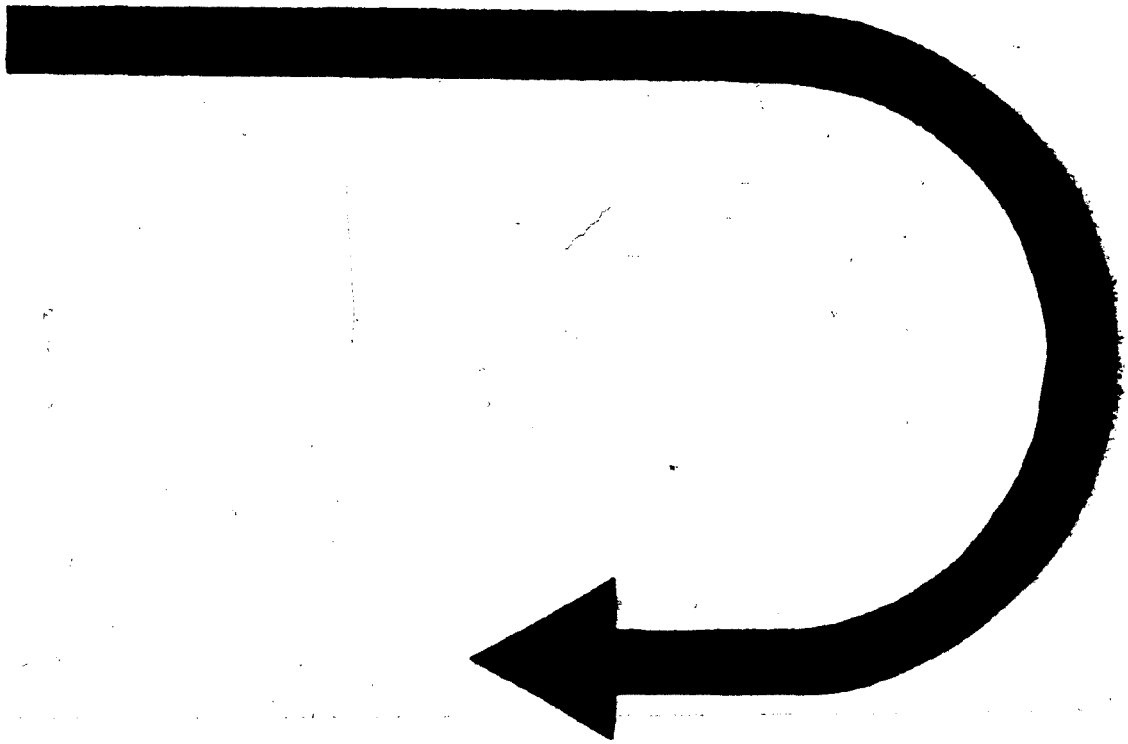

cardiagn.com

Notes

Upper intake manifold, fuel injectors (see Repair Group 25).

Cylinder head can be removed with engine installed.

When installing rebuilt cylinder head, lubricate camshaft lobes, and hydraulic lifters.

CAUTION

Always replace gaskets and seals.

CAUTION

Coolant/antifreeze **must not** be reused when replacing engine, cylinder head, cylinder head gasket, radiator and heater core.

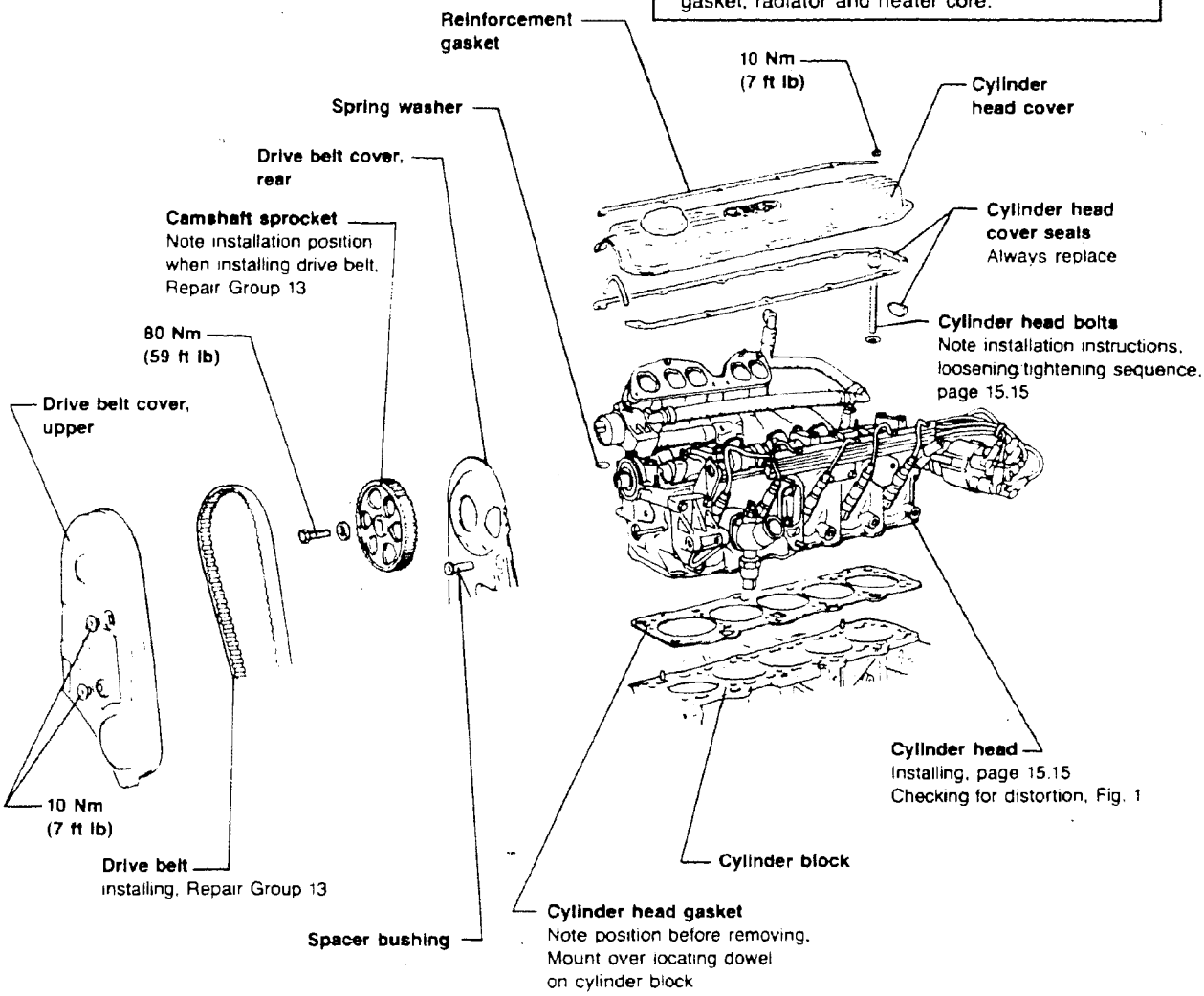

CAUTION

Mounting camshaft sprocket incorrectly will result in valve timing being advanced and possibility of valves hitting pistons.

15-699

G-2

cardiagn.com

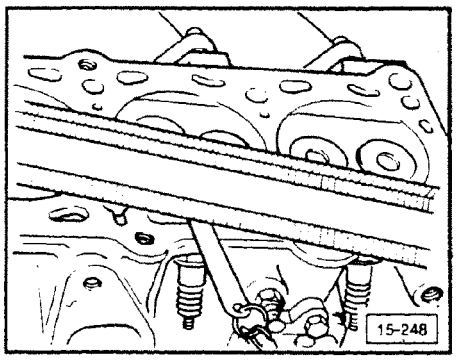

▶ **Fig. 1 Cylinder head, checking for distortion**

- maximum 0.1 mm (0.004 in.)

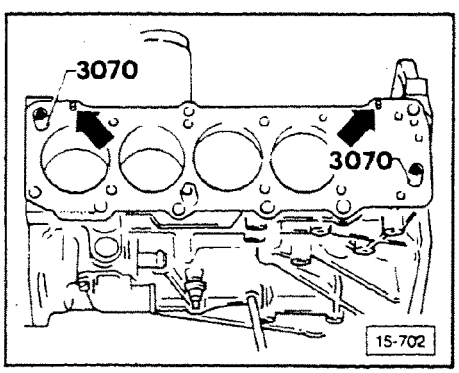

Cylinder head, installing

Note

DO NOT set crankshaft at TDC.

- screw guide pins from tool **3070** into cylinder head bolt holes **9** and **10**
- install cylinder head gasket onto centering pins (**arrows**)

- mount cylinder head to cylinder block
- install remaining 10 cylinder head bolts
- hand tighten only

- with screwdriver from **3070**, remove guide pins from holes **9** and **10**
- install cylinder head bolts into **9** and **10**
- hand tighten only

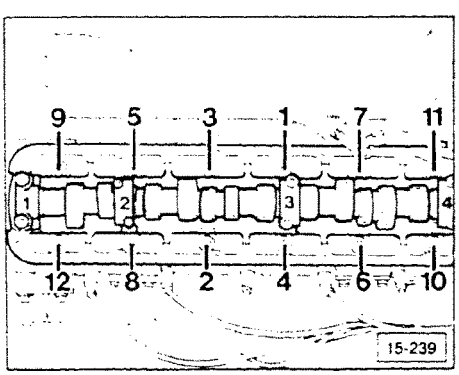

CAUTION

It is not necessary to retorque cylinder head bolts after repairs.

Cylinder head bolts, removing/installing

- tighten in numerical order, loosen in reverse order
- tighten bolts in **three** step sequence — engine cold
  - step **1** = 40 Nm (29 ft lb)
  - step **2** = 60 Nm (44 ft lb)
  - step **3** = 1/2 turn (180°) further without stopping (two 90° turns are OK)

cardiagn.com

Compression pressure, checking

- engine oil temperature minimum **30°C (86°F)**
- throttle plate completely open
- ignition coil lead removed from ignition distributor and connected to ground

- check compression pressure using pressure recorder US1120
- follow operating instructions for recorder
- operate starter until recorder unit indicates no further pressure increase

Compression pressure values

Engine code letters	new	wear limit
NG	10-14 bar (145-203 psi)	8 bar (116 psi)

- permissible difference between all four cylinders: 3 bar (43.5 psi)

cardiagn.com

THIS FRAME INTENTIONALLY LEFT

BLANK

cardiagn.com

Note

Cylinder heads which have cracks between valve seats or valve seat inserts and spark plug threads can be used further without reducing service life, provided the cracks are not wider than 0.5 mm, or when not more than the first spark plug thread is cracked.

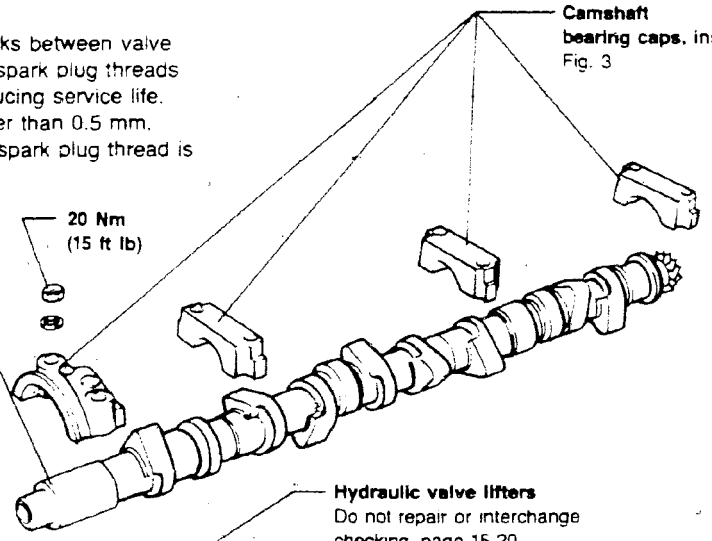

Camshaft bearing caps, installing
Fig. 3

20 Nm (15 ft lb)

Camshaft
checking axial play, Fig. 1
removing and installing, page 15.18
identifying Fig. 2
radial play, check with plastigage
wear limit: 0.1 mm (0.004 in)

Hydraulic valve lifters
Do not repair or interchange
checking, page 15.20
Check camshaft axial play before replacing

Seal
Lubricate sealing lip
and outer edge of seal
removing and installing, page 15.21

Valve spring seat, upper
identification:
wide flatside
faces camshaft

Valve keepers

Valve spring, outer/inner
Remove install with tool **2037**

Cylinder head
Reworking valve seats, page 15.19

Valve guide
replacement parts
have shoulder (**arrow**)

Valve stem seal
replacing, page 15.24

Valve spring seat, lower
Remove install with tool **3047**

Valve guide
original equipment
replacing, check for
wear, page 15.23

Cylinder head
refacing dimension
a = 132.75 mm (5.2 in)

Valves
dimensions, Fig. 4

CAUTION

Coolant antifreeze **must not** be reused when replacing engine, cylinder head, cylinder head gasket, radiator and heater core.

15-700

G-6

cardiagn.com

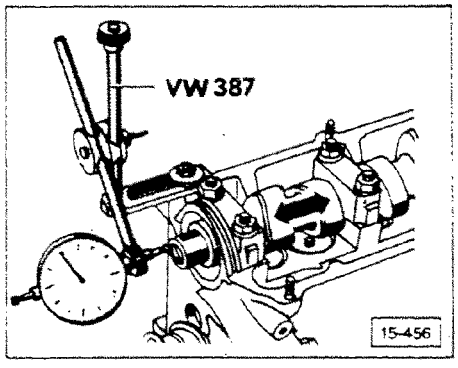

▶ **Fig. 1 Camshaft axial play, checking**

- measure with valve lifters removed, and bearing caps **1** and **4** installed
  - maximum 0.15 mm (0.006 in.)

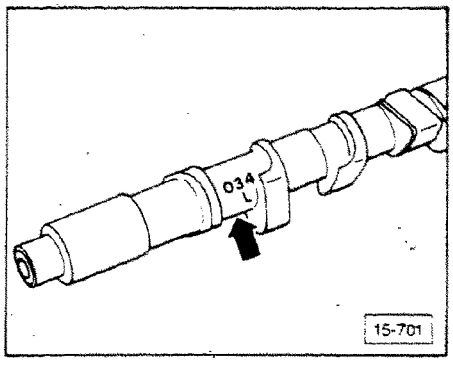

▶ **Fig. 2 Camshaft identification**

Identification between the cam of the 1st cylinder: 034L

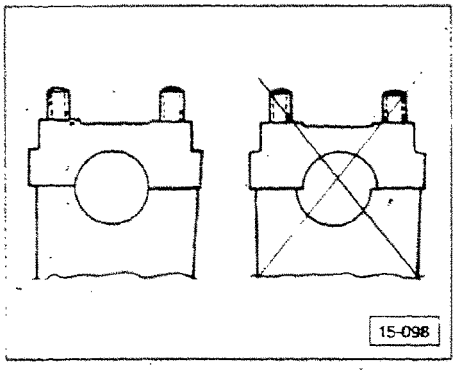

▶ **Fig. 3 Camshaft bearing caps, installing**

- lubricate bearing surfaces and camshaft journals
- install caps in proper order — observe off center bearing position

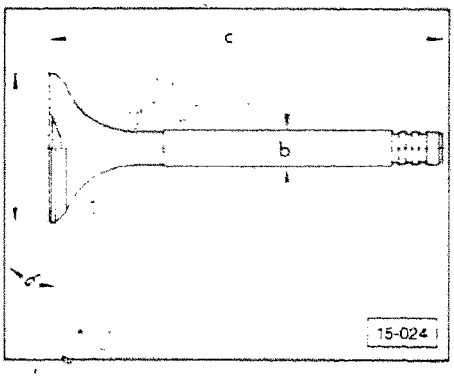

▶ **Fig. 4 Valve dimensions**

	Intake	Exhaust
a	40.0 mm (1.575 in.)	33.0 mm (1.299 in.)
b	7.97 mm (.314 in.)	7.95 mm (.313 in.)
c	91.0 mm (3.582 in.)	90.8 mm (3.575 in.)
α	45°	45°

CAUTION

Do not reface valves, only reface seats.

G-7

cardiagn.com

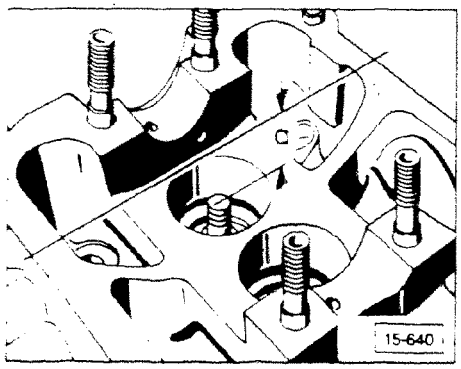

Valve seats, refacing

Calculating the maximum permissible refacing dimension

- insert valve and hold firmly against valve seat
- measure distance **a** between end of valve shaft and upper edge of cylinder head
- calculate refacing dimension **b** (see following illustrations) using the measured distance **a** (above) and:

Minimum dimension — intake valve = 33.8 mm Minimum dimension — exhaust valve = 34.1 mm
measure distance **a** - minimum dimension
= maximum permissible refacing dimension **b**

Minimum dimension

If the measured distance **a** is smaller than the minimum dimension, the hydraulic valve lifter will not work and the cylinder head must be replaced.

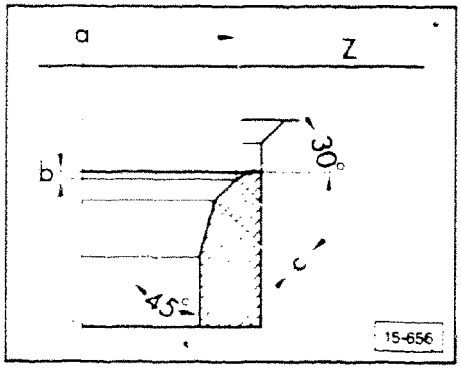

Intake valve seat, refacing

a = 39.2 mm (1.543 in.)
b = maximum permissible refacing dimension
c = approximately 2.0 mm (0.079 in.)
Z = cylinder head lower edge
30° = upper correction angle
45° = valve seat angle

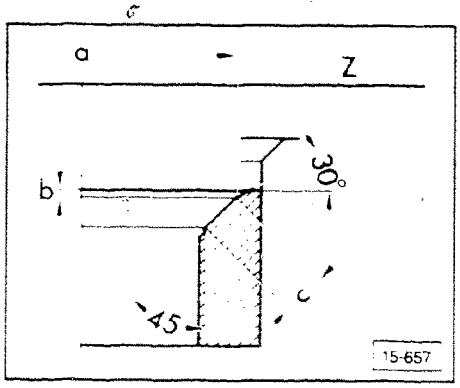

Exhaust valve seat, refacing

a = dia. 32.4 mm (1.276 in.)
b = maximum permissible refacing dimension
c = approximately 2.0 mm (0.079 in.)
Z = cylinder head lower edge
30° = upper correction angle
45° = valve seat angle

Exhaust valve seat rings are also made with a narrowed diameter. When refacing make sure radius of the narrowed diameter is not damaged.

cardiagn.com

Hydraulic valve lifters, checking

CAUTION

After replacing lifters, do not start engine for approximately 30 minutes, otherwise valves may hit piston. Lifter must be allowed to bleed down to proper adjustment.

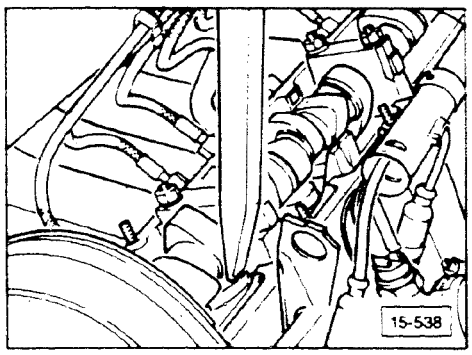

Always place removed valve lifter on a clean surface with the contact surface (camshaft side) facing downward.

Always replace complete valve lifter. Lifter cannot be adjusted or repaired.

Unusual noise from valve lifter while starting is normal.

- run engine until radiator fan comes on at least once
- bring engine speed to approximately 2500 RPM for two minutes

If valve lifter is still noisy, replace as follows:

- remove cylinder head cover
- turn crankshaft pulley bolt clockwise until cam lobes of cylinder to be checked point upward
- push down against valve lifter with light pressure using a suitable wood stick (as shown). If valve lifter can be pushed down more than 0.1 mm, replace lifter.

cardiagn.com

Camshaft oil seal, removing/ installing

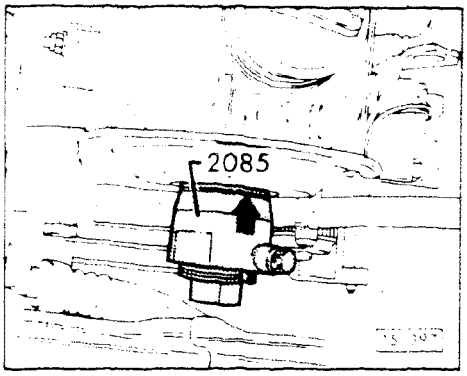

Removing

- remove upper drive belt cover
- set crankshaft to TDC on cylinder no. 1
- slacken drive belt and remove
- remove camshaft sprocket

- remove woodruff key from camshaft
- install mounting bolt for camshaft sprocket with washer up to stop
- remove inner part of oil seal extractor **2085** two turns (approximately 3.0 mm) from outer part of tool and lock with screw

- lubricate threaded head of oil seal extractor. Mount and push in as far as possible into oil ring
- loosen knurled screw and turn inner part of puller against camshaft until oil seal is pulled out
- clamp extractor in vice and remove oil seal with pliers

Installing

- coat oil seal seat and seal lip lightly with oil
- press oil seal into cylinder head until **flush** using **10-203**, with special hex head bolt **10-203/1**

> **CAUTION**
>
> **DO NOT** press oil seal in to stop. The oil return bore will be covered.

cardiagn.com

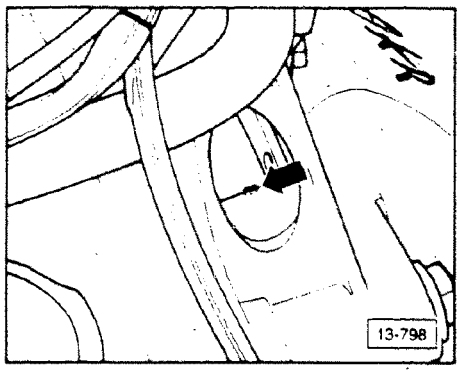

Camshaft, installing and removing

Removing

- remove upper drive belt cover
- remove upper part of intake manifold
- remove cylinder head cover

- turn crankshaft to TDC on cylinder no. 1
- slacken and remove drive belt
- remove camshaft sprocket
- remove woodruff key from camshaft

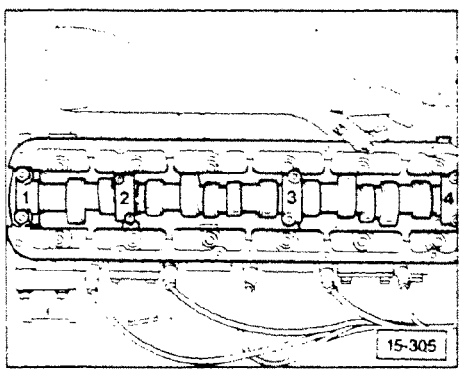

- remove bearing caps **1, 3**
- loosen bearing caps **2** and **4** alternately and diagonally

Installing

When installing the camshaft, the cams for number 1 cylinder must be pointing upwards. When installing bearing caps, note center offset of bore. Before installing caps, place in position and determine installed position.

- tighten bearing caps **2** and **4** alternately and diagonally
  - tightening torque: 20 Nm (15 ft lb)
- install bearing caps **1** and **3**
  - tightening torque: 20 Nm (15 ft lb)
- position camshaft sprocket and tighten
  - tightening torque: 80 Nm (59 ft lb)

cardiagn.com

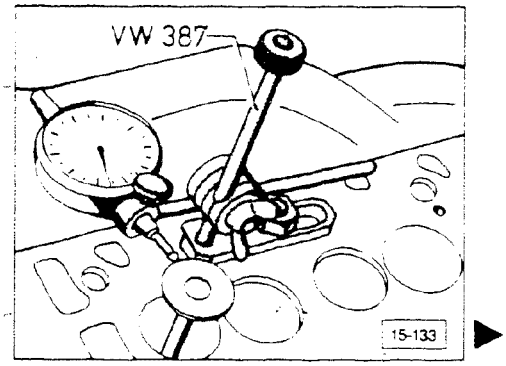

Valve guide, checking for wear

Due to slight difference in stem dimensions, **only** use intake valve in intake guide, and exhaust valve in exhaust guide.

- remove carbon
- install **VW 387** and dial indicator
- insert new valve into valve guide
- valve stem end must be flush with valve guide end
- rock valve back and forth (**arrow**) against dial indicator. Dial indicator reading shows valve guide wear

	Intake valve	Exhaust valve
Maximum dial indicator reading	1.0 mm (0.039 in)	1.3 mm (0.051 in)

Valve guides, replacing

Cylinder heads on which the valve seat surface can no longer be refaced or cylinder heads that have been refaced down to the minimum dimension cannot be repaired further.

- press worn valve guides out from camshaft side with tool **10-206**
  - valve guides with shoulder (service version) must be pressed out from **combustion** side
- coat new guides with oil and press into cold cylinder head to the shoulder from camshaft side with tool **10-206**
- ream valve guides by hand with reamer tool **10-215**
  - use proper cutting lubricant
- reface valve seats

CAUTION

Once guide shoulder is seated do not use more than 1 ton pressure or guide shoulder may break.

cardiagn.com

CAUTION

Once guide shoulder is seated do not use more than 1 ton pressure or guide shoulder may break.

Valve stem seal, removing/installing

Removing
(with cylinder head installed)

- remove spark plugs
- remove camshaft and hydraulic lifters
- turn crankshaft until piston of cylinder concerned is in BDC position

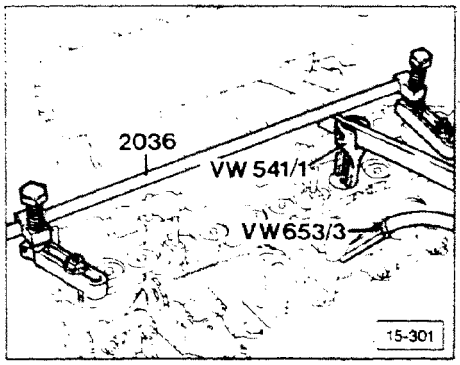

- install tool **2036** and adjust to stud height
- insert pressure hose **US 1106** or **VW653/3** into spark plug threads and apply steady pressure of at least 6 bar (87 psi)
- remove valve springs with lever **VW541/1**

If valve keepers are very hard to come out, they can be loosened by tapping **lightly** on assembly lever with hammer.

- remove valve stem seal with tool **3047**

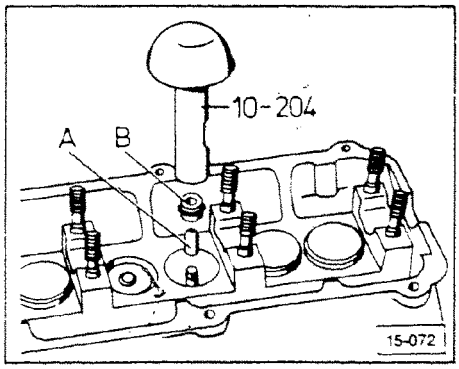

Valve stem seal

Installing

- slide plastic sleeve **A** onto valve stem
- lubricate valve stem seal **B**
- push seal carefully onto valve guide using plastic seal protector

CAUTION

When installing valve stem seals, always use plastic sleeve to prevent damage.

cardiagn.com

Fuel Quality and Carbon Deposits

Research by Audi and other manufacturers has shown that the performance of gasoline engines today is directly related to the type and quality of fuel used.

Fuel without the proper additives can cause carbon deposits to form on intake valves and fuel injectors.

These carbon deposits can cause reduced engine power, unstable idle and hesitation during acceleration after starting a cold engine.

The extent of carbon build-up varies depending on the type of fuel, type of driving and operating conditions.

Intake valves

Moderate to heavy deposits, grades 4–10, (refer to current campaign circular for further description of deposit grading system) can be removed by using the "Kent-Moore Carbon Blaster."

Light deposits (grades 1–3) on intake valves can be removed as follows:

- add one 591 ml. (20 fl. oz.) bottle of "Autobahn Gasoline Additive", P/N: **ZVW 246 001** to fuel tank.
- fill fuel tank completely. Best results are achieved with extended freeway style driving. Do not refill fuel tank until fuel gauge reads 1/4 full.

CAUTION

Do not exceed the following recommendations when using the 591 ml. (20 fl. oz.) bottle of "Autobahn Gasoline Additive":

Normal vehicle oil change interval	Maximum gas additive treatments between oil changes
8000 km (5000 mi.)	2
12000 km (7500 mi.)	4

Fuel injectors

Injectors can be cleaned by using the fuel injection system cleaning kit, **US G16** (see current service literature for instructions outlining use of **US G16** kit).

NOTE

After cleaning injectors, the idle speed (idle valve adjustment) and CO content should be checked and adjusted if necessary.

Prevention

Carbon deposit build-up on intake valves and injectors can be prevented through the use of gasolines containing the proper deposit control additives. U.S. suppliers such as Shell, Exxon, Chevron and Amoco, among others, advertise and sell gasoline which contains these additives. When in doubt, owners should consult with their local service station or oil company about available gasolines with additives that will keep **intake valves and injectors clean**.

In areas where gasoline containing deposit control additives is unavailable, the specially formulated 192 ml. (6.5 fl. oz.) bottle of "Autobahn Additive" should be used as follows:

- add one 192 ml. (6.5 fl. oz.) bottle of "Autobahn Gasoline Additive", P/N: **ZVW 246 003** to fuel tank before every fill up.
- for best results, do not refill fuel tank until the fuel gauge reads 1/4 full.

CAUTION

Part numbers are for reference only. Always check with your Parts Department for latest parts information.

cardiagn.com

THIS FRAME INTENTIONALLY LEFT

BLANK

cardiagn.com

CONTINUED IN THE

BEGINNING OF NEXT ROW

cardiagn.com

- removing installing fuel injectors, Group 24
- drive belt installing, Group 13
- cylinder head can be removed installed with engine installed
- all gaskets are to be replaced during assembly
- when installing a replacement cylinder head, lubricate the surfaces between the lifter and the cam lobe

CAUTION

After installing new lifters, the engine must **NOT** be started for at least thirty minutes or piston damage could occur.

■ check compression pressure, page 15.29

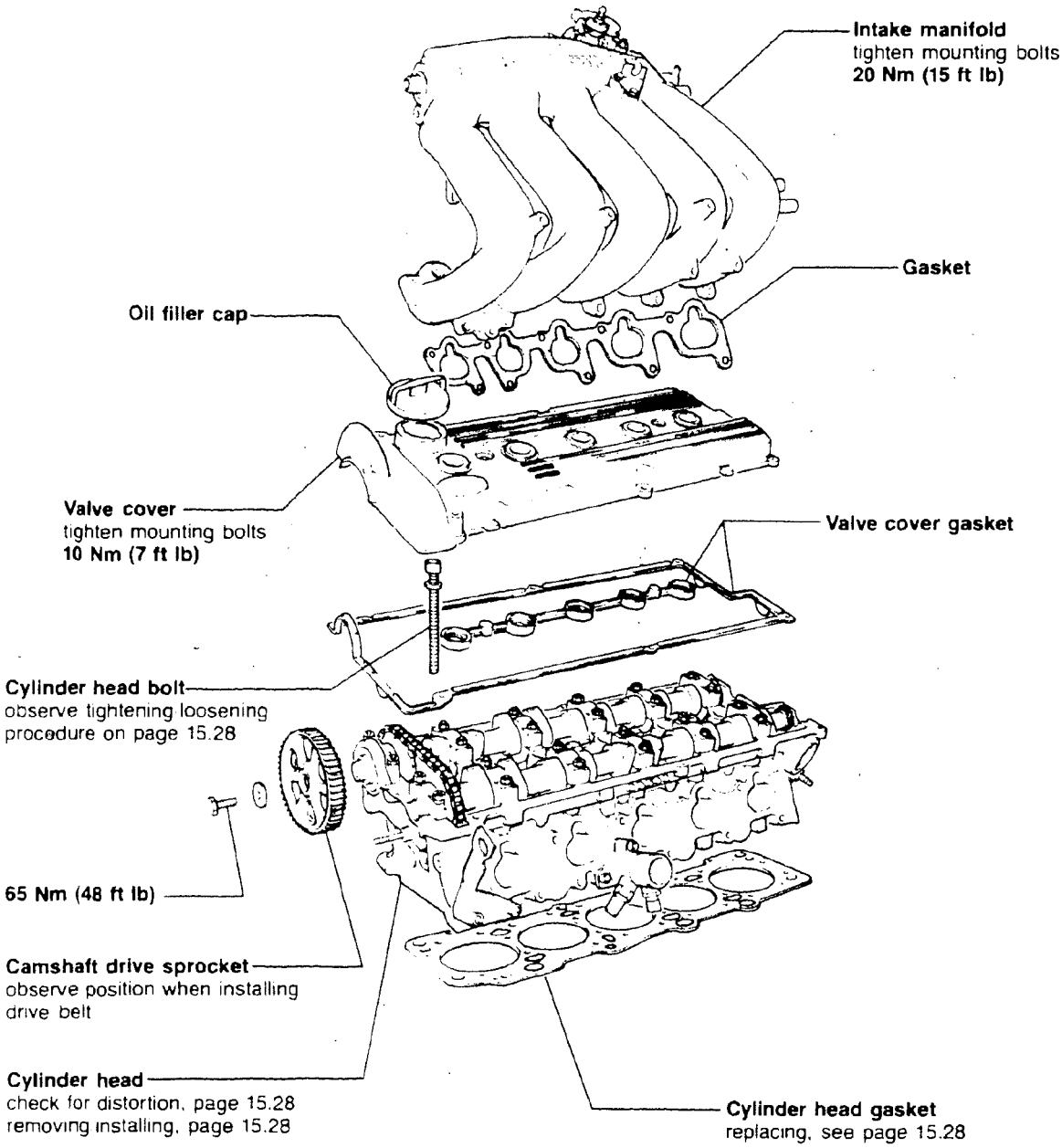

H-2

cardiagn.com

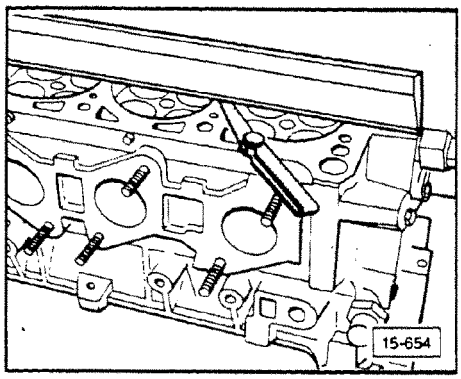

Cylinder head distortion, checking

Note

Cylinder head should be clean and free of gasket material before performing this check.

- use straight edge **US 1030** and feeler gage to check for distortion
  - maximum permissible distortion is 0.1 mm (0.004 in.)

Cylinder head, refacing

- measure distance between cylinder head bolts surface and lower edge of cylinder head
  - minimum dimension 118.1 mm (4.65 in.)

Cylinder head, installing

Note

Prior to installing cylinder head be sure that crankshaft is at **TDC** and that camshaft markings are aligned. Also see Group 13.

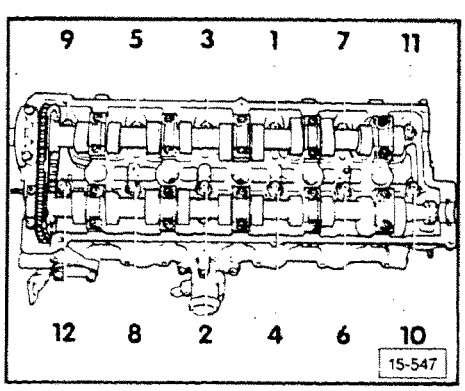

- install cylinder head gasket on locating pins with word **OBEN** (and/or part number) facing cylinder head
- install cylinder head, insert head bolts finger tight
- tighten cylinder head bolts in three step sequence as follows

Tightening torque, engine cold

- Step **I** 40 Nm (29 ft lb)
  Step **II** 60 Nm (44 ft lb)
  Step **III** 1/2 additional turn (180°) to each bolt in one movement
  (two 90° turns are permissible)

- remove cylinder head bolts in reverse sequence

Note

It is not necessary to re-tighten cylinder head bolts during scheduled maintenance or after performing repairs.

cardiagn.com

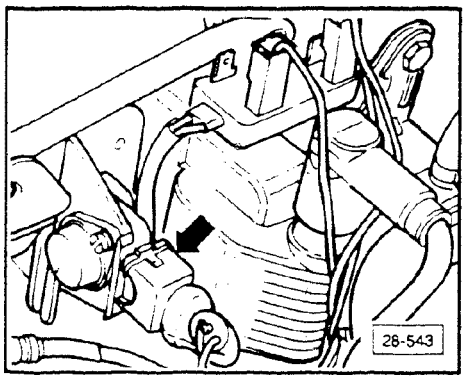

Cylinder compression, testing

Requirements

- engine oil temperature 30°C (86°F) minimum
- throttle valve fully opened
- disconnect power output stage of ignition coil
- remove all spark plugs
- remove fuse **13**

- check compression pressure using **US 1120** recorder tester
- operate starter until recorder shows **NO** further increase in pressure

Engine code letters	Compression values	
	New	Wear limit
7A	10 to 14 bar (145 to 203 psi)	8 bar (116 psi)

Maximum permissible difference between all cylinders: 3 bar (44 psi)

cardiagn.com

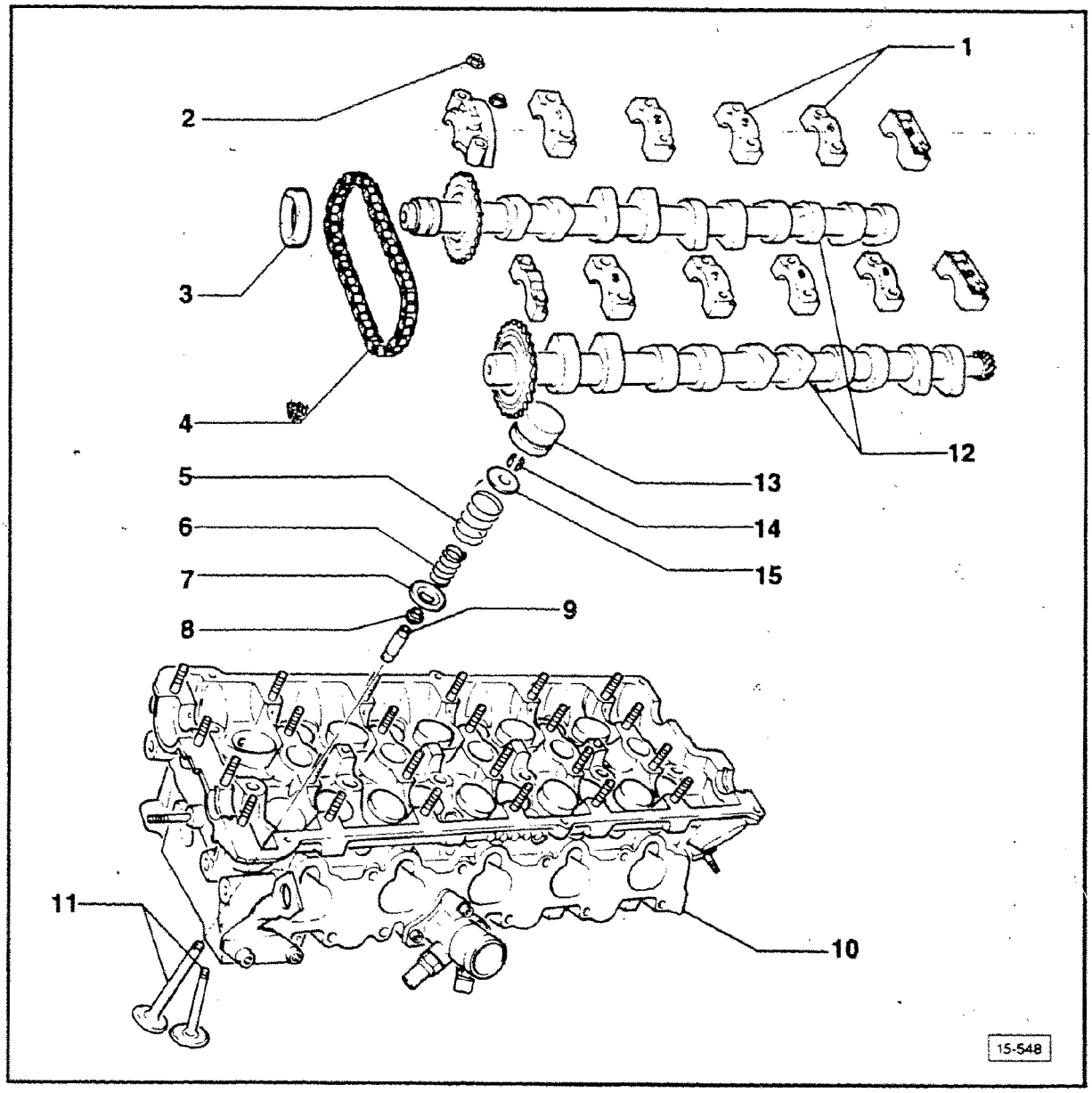

Note

Heads with fine cracks between valve seats and spark plug threads can be installed again without reducing engine service life provided that the cracks are small and not more than 0.5 mm wide or when only the first of the spark plug threads is cracked.

1 — **Bearing caps**

2 — **15 Nm (11 ft lb)**

3 — **Oil seal**
replacing, see page 15.38

4 — **Drive chain**

5 — **Valve spring, outer**
removing/installing: use tool **2037** and/or mounting tool **2036** along with **VW 541/1** and thrust piece **VW 541/5**

6 — **Valve spring, inner**
removing/installing: use tool **2037** and/or mounting tool **2036** along with **VW 541/1** and thrust piece **VW 541/5**

7 — **Valve spring seat, lower**
remove and install using **3047 A**

8 — **Valve stem seal**
replacing, page 15.36

cardiagn.com

9 — **Valve guide**
checking, page 15.34
installing, page 15.35

10 — **Cylinder head**
refacing valve seats, page 15.32
checking for distortion, page 15.28
refacing, page 15.28

11 — **Intake and exhaust valves**
lap only, do **NOT** grind

12 — **Camshafts**
axial clearance, checking page 15.39
radial clearance, checking page 15.39
removing installing, page 15.39

13 — **Valve lifters**
checking, page 15.37

14 — **Valve keepers**

15 — **Valve spring retainer, upper**

CAUTION

Exhaust valve is sodium filled, see page 15.33 for disposal procedures.

cardiagn.com

Valve seats, refacing

CAUTION

Only rework the valve faces enough to achieve a suitable contact. Calculate the maximum permissible refacing dimension prior to refacing.

If the refacing dimension is exceeded, proper function of the hydraulic lifter will not be assured and the cylinder head will have to be replaced.

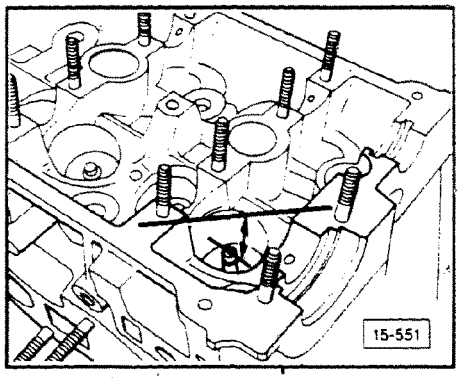

Calculating the maximum permissible refacing dimension

- insert valve into seat and push valve firmly against seat
- measure distance between center of valve stem end and upper edge of cylinder head

The measured distance minus the minimum dimension results in the maximum permissible refacing dimension.

Minimum dimensions:

Intake valve = 36.0 mm
Exhaust valve = 36.3 mm

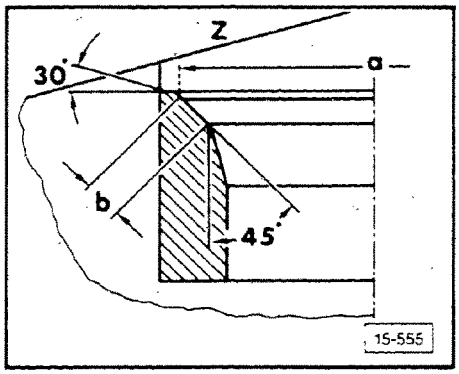

Intake valve seat, refacing

a = 31.2 mm
b = 1.5 to 1.8 mm (if necessary, rework valve seat with a 75° correcting cutter)
z = cylinder head lower edge
30° = upper correcting angle
45° = valve seat angle *

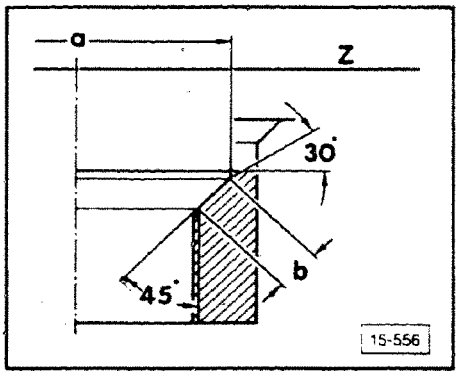

Exhaust valve seat, refacing

a = 27.6 mm
b = approximately 1.8 mm
z = cylinder head lower edge
30° = upper correcting angle
45° = valve seat angle *

*Pay attention to permissible refacing dimension

cardiagn.com

Intake and exhaust valves, refacing

> **CAUTION**
>
> Do **NOT** reface valves. Only lapping is permitted.

Exhaust valve, discarding

Before discarding exhaust valves read this warning:

> **WARNING**
>
> Exhaust valves are sodium filled. Before discarding these valves neutralize the sodium to avoid possible injury to people in the recycling chain.

Before discarding observe the following:

- always wear protective goggles or glasses
- note that sodium reacts violently with water
- when cutting valves, valves must not come into contact with water
- use grinding equipment which does not use water or other liquids for lubrication and/or cooling
- to neutralize sodium, drop cut-off valve stems into a bucket of water and move quickly away from water bucket
- do not drop more than 10 valve stems at a time into water bucket

Discarding procedure

- use grinding stone or grinding disc to cut valve stem off near head of valve
- drop cut-off valve stems into bucket of water (sodium will now react with water!)
- once reaction has stopped (water stops bubbling) scrap valve stems
- water is bio-degradeable and may be discarded accordingly

cardiagn.com

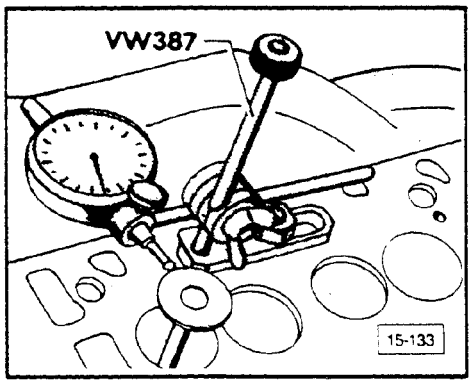

Valve guide wear, checking

Note

When repairing engines with leaking valves, it is insufficient to merely replace the valves and machine the seats. The valve guides must also be checked for wear, a condition which increases with higher mileage.

- insert **NEW** valve into cylinder head/guide to depth where stem end is flush with guide

CAUTION

There are differences in intake and exhaust valve stem diameters. Be sure to insert intake valves **ONLY** into intake guides and exhaust valves **ONLY** into exhaust guides.

- install tool **VW 387** onto cylinder head, adjacent to guide being checked
- rock valve back and forth (**arrow**) against dial indicator and note total travel

Wear limits

Dial indicator reading (max.)	Intake valve	Exhaust valve
	1.0 mm (0.039 in.)	1.3 mm (0.051 in.)

cardiagn.com

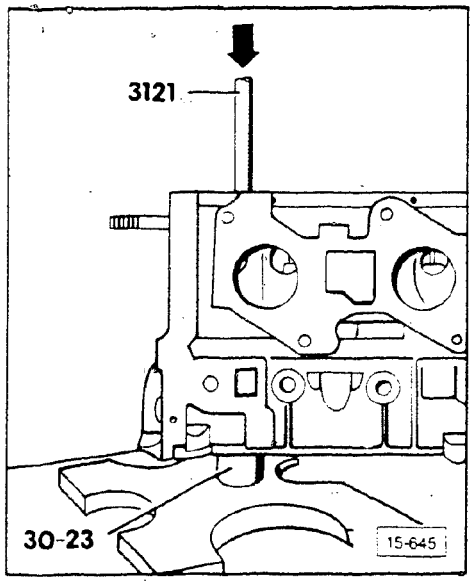

Valve guides, removing/installing

Removing

- insert tool **3121** into valve guide from combustion chamber side
- push out worn valve guide from combustion chamber side using sleeve **30-23** as support

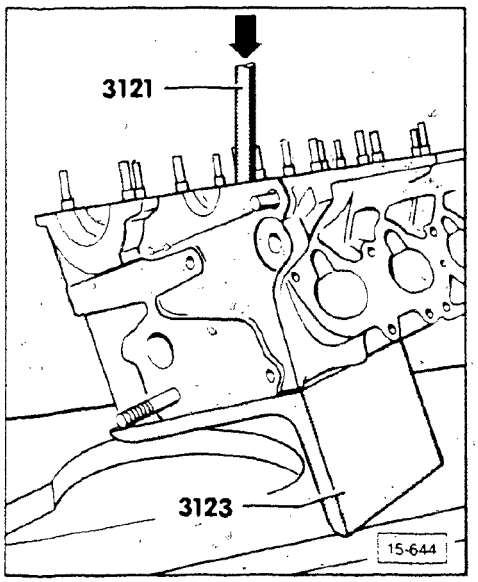

Installing

- coat new guide with oil and using tool **3121** press guide into (cold) cylinder head (from camshaft side) up to shoulder of guide

> **CAUTION**
>
> Once guide shoulder is seated do **NOT** apply more than 1 ton of pressure or shoulder of guide may break.

- ream valve guides to size using tool **3120** and proper cutting lubricant
- machine valve seats

> **CAUTION**
>
> Only rework the valve seats enough to achieve a suitable contact. Calculate the maximum permissible refacing dimension **PRIOR** to refacing. (Procedure, page 15.32.)
>
> If the refacing dimension is exceeded, proper function of the hydraulic lifter will not be assured and the cylinder head will have to be replaced.

cardiagn.com

Valve stem seals, installing

(with cylinder head installed)

- remove camshaft and valve lifters
- remove spark plugs
- rotate crankshaft until piston of cylinder to be repaired is at Bottom Dead Center position
- install pressure hose **VW 653/3** (or equivalent) into spark plug hole and apply continual pressure of at least 6 bar (87 psi)
- install tool **2036** and adjust bearing to height of stud
- remove valve springs using tool **541/1** in combination with spacer **541/5**

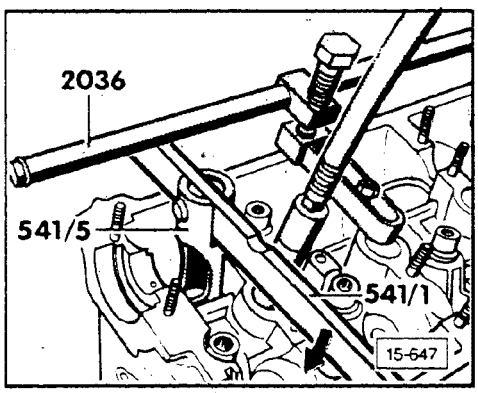

Note

Tight valve keepers can be loosened by tapping lightly on tool lever.

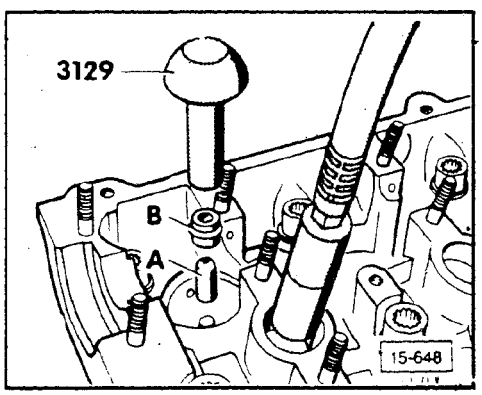

- remove valve stem seals using tool **3047 A**
- slide plastic seal protector **A** onto valve stem
- lubricate valve stem seal **B**
- carefully push seal onto valve guide using tool **3129**

> **CAUTION**
>
> Do **NOT** install seal without using plastic seal protector, otherwise seal will be damaged.

cardiagn.com

Hydraulic valve lifters, checking

- store hydraulic valve lifters upside down
- always mark before removing to ensure re-installation in original location
- prior to installing, check axial clearance
- prior to installing, lubricate cam/lifter contact surfaces

CAUTION

Hydraulic valve lifters are **NOT** adjustable.

Noisy lifters may be replaced after the following checks:

- run engine until radiator fan comes on at least once
- bring engine speed to approximately 2500 RPM for 2 minutes
  - if valve lifter is still noisy; replace
- remove intake manifold
- remove valve cover
- turn crankshaft pulley bolt clockwise until cam lobes of cylinder to be checked are pointing up
- push down with suitable wood stick against valve lifter as shown
  - if valve lifter can be pushed down, lifter must be replaced

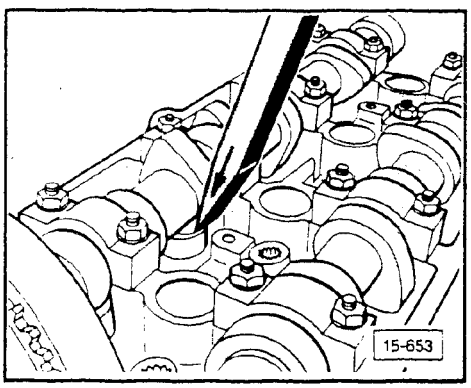

CAUTION

After replacing lifters **DO NOT** start engine for approximately 30 minutes to allow the lifters to bleed down.

cardiagn.com

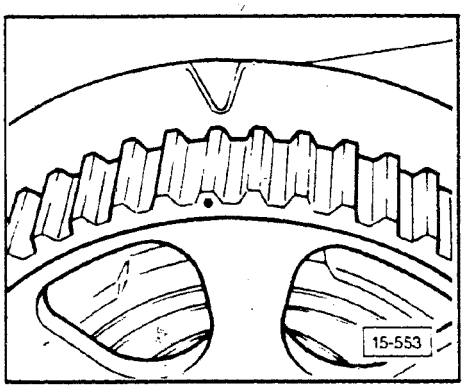

Camshaft oil seal, removing

- remove upper drive belt cover
- set crankshaft to **TDC** for cylinder **1**
- slacken drive belt on water pump and remove

- remove camshaft drive sprocket
- screw mounting bolt for camshaft sprocket (including washer) onto camshaft up to stop

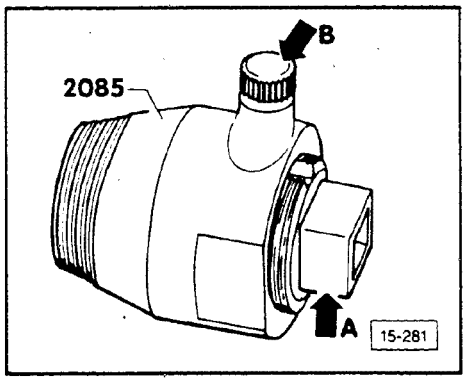

- unscrew inner part (**arrow A**) 3 to 4 turns
- lock in position with setscrew (**arrow B**)

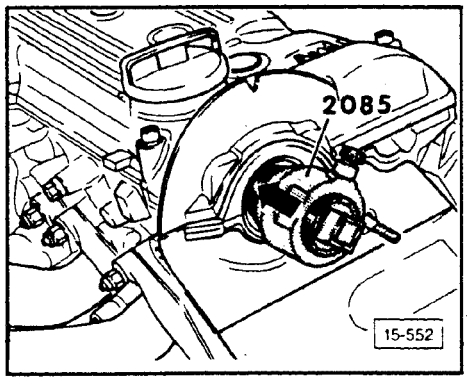

- coat threaded end of puller with oil
- set puller into oil seal and turn clockwise while pushing toward cylinder head as far as it will go (**arrow**)

- loosen knurled screw on tool and turn inner part of puller against camshaft until oil seal is pulled out
- clamp oil seal puller in vise and remove seal with pliers

Camshaft oil seal, installing

- lightly coat oil seal lip and oil seal seat with oil
- push seal over sleeve of tool **10-203**
- press oil seal into cylinder head until flush with chambered edge

Note

Do **NOT** press in oil seal any farther than flush, otherwise oil hole will be blocked.

cardiagn.com

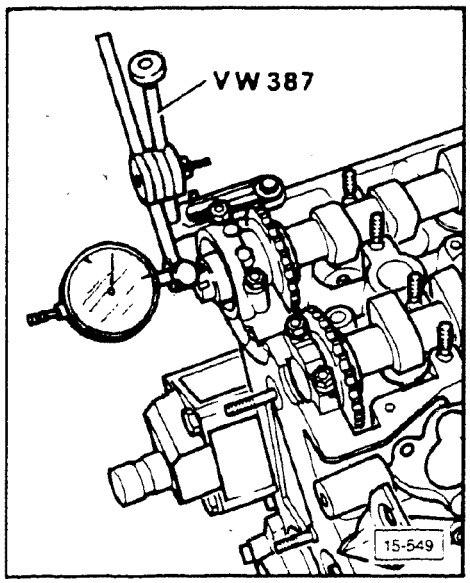

Camshaft axial clearance, checking

- measure with valve lifters and drive chain removed, first and last bearing caps installed
  - wear limit 0.2 mm (0.008 in.)

Camshaft radial clearance, checking

Requirement
- valve lifters removed

- carefully clean camshaft bearing caps, seats and journals
- install camshaft on cylinder head so cam lobes do not touch valve spring retainers or valves
- lay "Plastigage"* across journal
- install bearing caps in correct position and tighten to 20 Nm (15 ft lb)

CAUTION

Do **NOT** rotate camshaft.

- remove bearings caps
- compare width of flattened "Plastigage"* with scale
  - wear limit 0.2 mm (0.008 in.)

If limit exceeded
- install new camshaft for trial measurement and measure again

If clearance still exceeds limit
- replace cylinder head

cardiagn.com

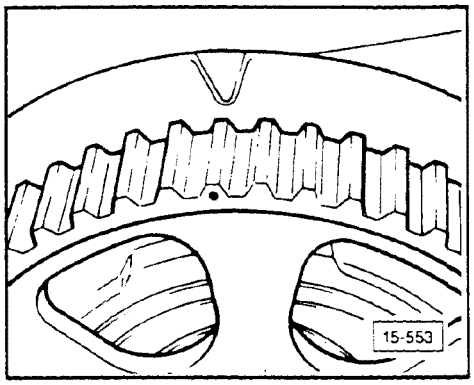

Camshafts, removing

- remove upper drive belt cover
- remove intake manifold
- remove valve cover

- set camshaft to **TDC** for cylinder **1**
- slacken drive belt on water pump and remove
- remove camshaft drive sprocket

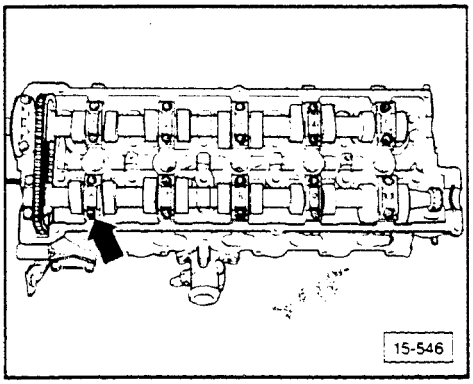

Exhaust camshaft

- remove bearing cap in front of chain as well as bearing caps **2** and **4**
- loosen bearing caps **1**, **3** and **5** alternately and diagonally

Intake camshaft

- remove bearing cap in front of chain as well as bearing caps **7** and **9**
- loosen bearing caps **6**, **8** and **10** alternately and diagonally

Camshafts, installing

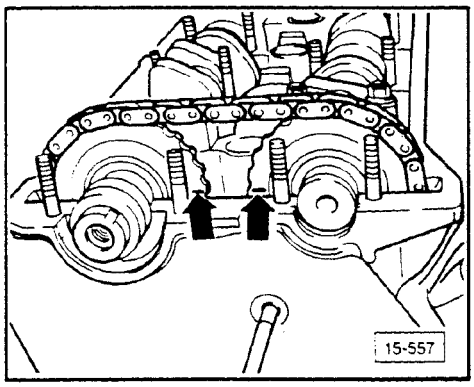

Intake camshaft

- install camshaft with chain so that marking on cam sprockets (**arrows**) line up

cardiagn.com

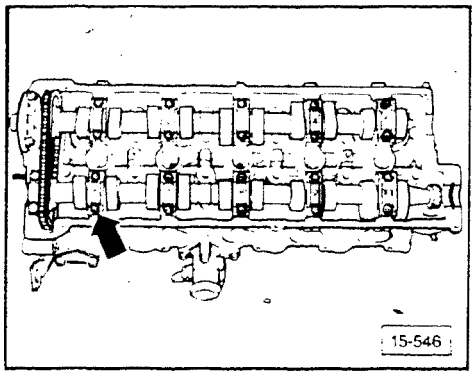

- install bearing caps with recessed corners pointing toward intake side of cylinder head (**arrow**)

Note

The ignition distributor must be removed when installing the camshaft.

- tighten bearing caps **6**, **8** and **10** alternately and diagonally
  - torque to 15 Nm (11 ft lb)
- install remaining bearing caps
  - torque to 15 Nm (11 ft lb)

Exhaust camshaft

- tighten bearing caps **1**, **3** and **5** aternately and diagonally
  - torque to 15 Nm (11 ft lb)
- install remaining bearing caps
  - torque to 15 Nm (11 ft lb)
- install camshaft drive sprocket
  - torque to 65 Nm (48 ft lb)
- install drive (timing) belt, see Group 13 for timing procedures

CAUTION

After replacing lifters do **NOT** start engine for approximately 30 minutes to allow the lifters to bleed down.

After working on the valve train, turn the engine over slowly and carefully by hand several times to be sure that the valves do **NOT** contact the pistons for any reason.

cardiagn.com

Index

4-cylinder

Oil
- capacity, specifications 17.3
- cooler, filter 17.2
- pan 17.2
- pressure, checking 17.4
- pump, axial play 17.3
- pump, backlash 17.3

5-cylinder

Oil
- capacity, specifications 17.7
- filter 17.6
- pan 17.6
- pressure relief valve 17.5
- pressure switch, checking 17.8
- pressure switches 17.6
- pump, drive belts 17.5

Vibration damper
- lowering subframe 17.7
- removing/installing 17.7

Coupe

Components
- layout 17.10

Crankshaft
- oil seal, installing 17.15
- oil seal, removing 17.14

Oil
- pressure switch, checking 17.15
- pump, removing 17.13

cardiagn.com

CAUTION

Always replace gaskets and seals.

CAUTION

If, as a result of engine damage, large quantities of metal shavings are found in the engine oil, oil passages should be cleaned and the oil filter replaced.

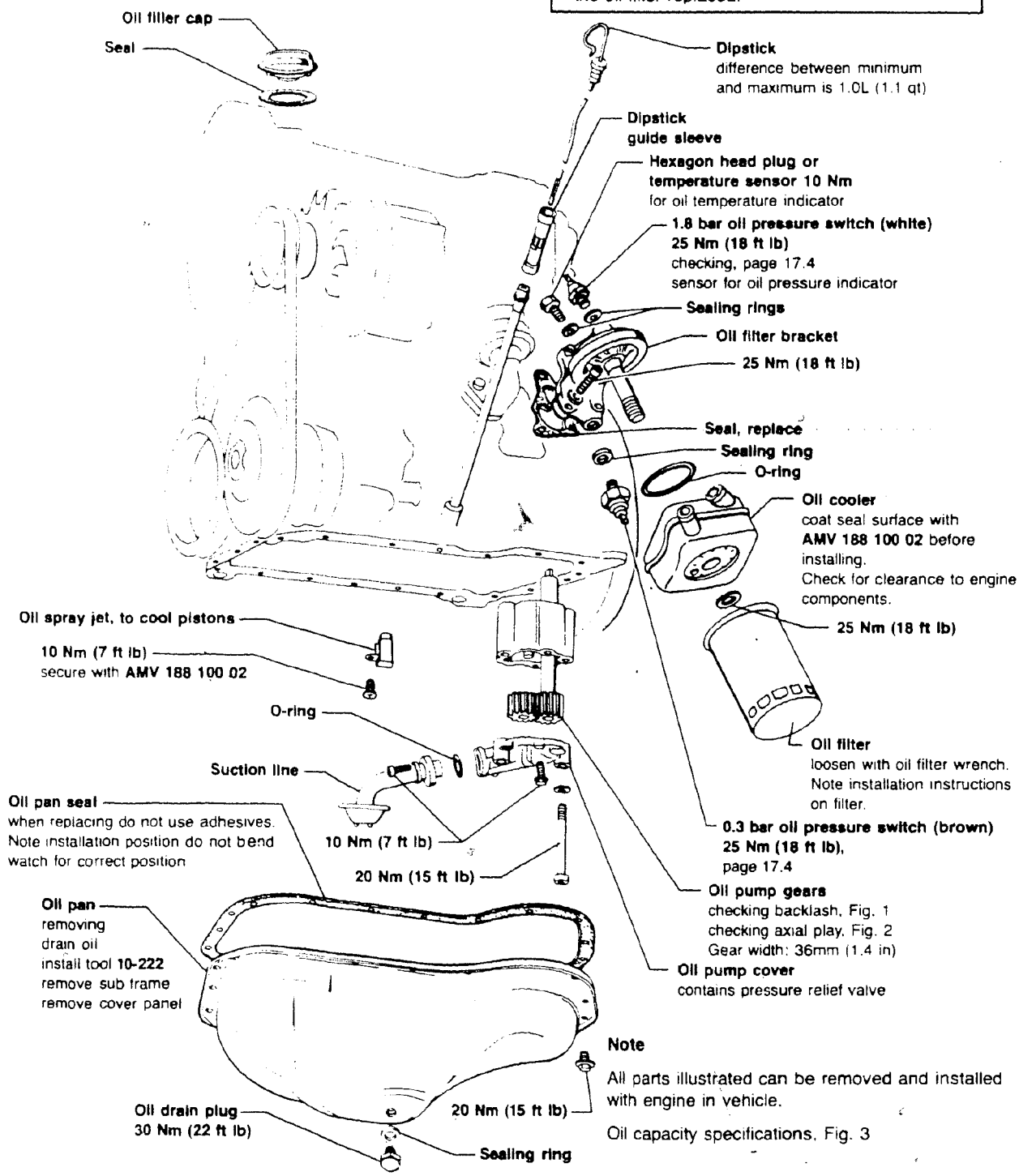

Note

All parts illustrated can be removed and installed with engine in vehicle.

Oil capacity specifications, Fig. 3

I-2

cardiagn.com

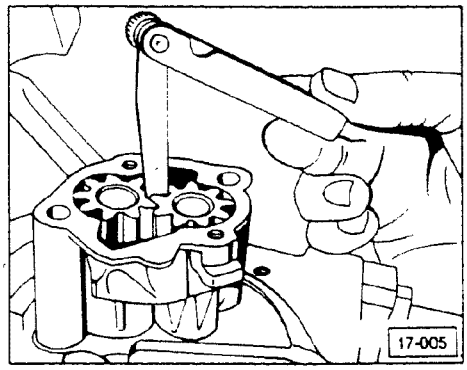

▶ **Fig. 1 Oil pump, checking backlash**

New: 0.05 mm (0.002 in)
Wear limit: 0.20 mm (0.008 in)

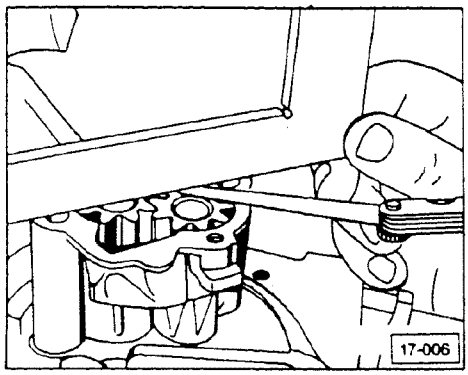

▶ **Fig. 2 Oil pump, checking axial play**

Wear limit: 0.15 mm (0.006 in)

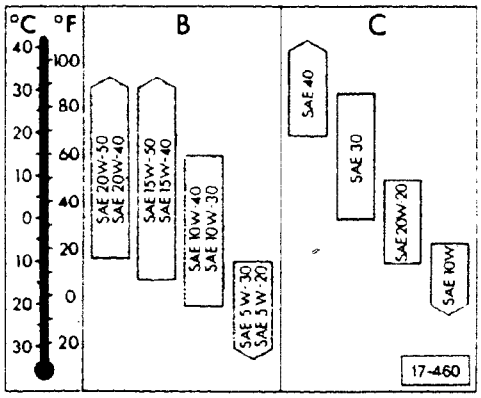

Oil capacity, specifications

▶ **Fig. 3 Oil specification**

Use only oil marked **SF**.

B = Multi-grade oil
C = Single-grade oil

Engine oil capacity

- With oil filter 3.0L (3.2 qts)
- Without oil filter 2.5L (2.7 qts)

cardiagn.com

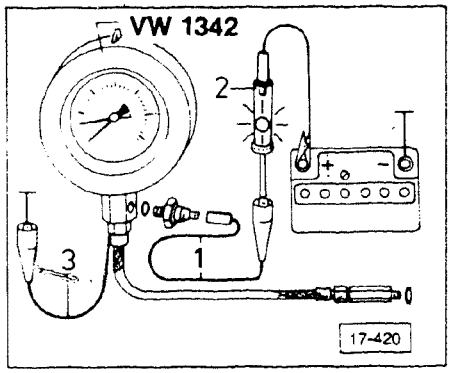

Oil pressure switch brown (0.3 bar), checking

- remove 1.8 bar (26 psi) oil pressure switch (white insulation) and install into test gauge
- install **VW 1342** in place of 1.8 bar (26 psi) oil pressure switch
- remove wire to 0.3 bar (4 psi) oil pressure switch, and install blue wire **1** from test device

- connect test lamp **2** to wire **1** and battery **plus** terminal
- connect wire **3** (brown) to suitable ground point on car
  - test light must come on
- start engine and increase RPM slowly
  - at a pressure of 0.15-0.45 bar (2.2-6.5 psi) test light must go out

If **NO**
replace switch

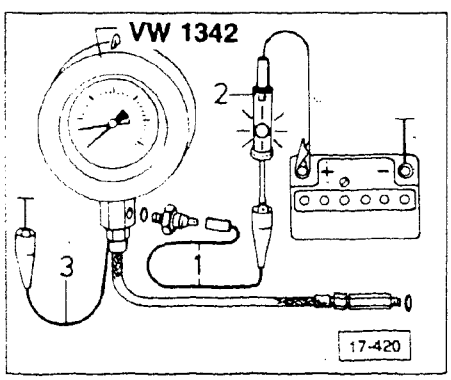

Oil pressure switch white (1.8 bar), checking

- remove wire **1** from 0.3 bar (4 psi) oil pressure switch, and connect to 1.8 bar (26 psi) oil pressure switch (white insulation)
- start engine and increase RPM slowly
  - at a pressure of 1.6-2.0 bar (23-29 psi) test light must come on.

If **NO**
replace switch

- continue to increase RPM
  - at 2000 RPM, minimum pressure must be **at least** 2.0 bar (29 psi)

cardiagn.com

THIS FRAME INTENTIONALLY LEFT

BLANK

cardiagn.com

CAUTION

Always replace gaskets and seals.

Note

All parts illustrated can be removed and installed with engine in vehicle.

Oil capacity specifications
Fig. 3

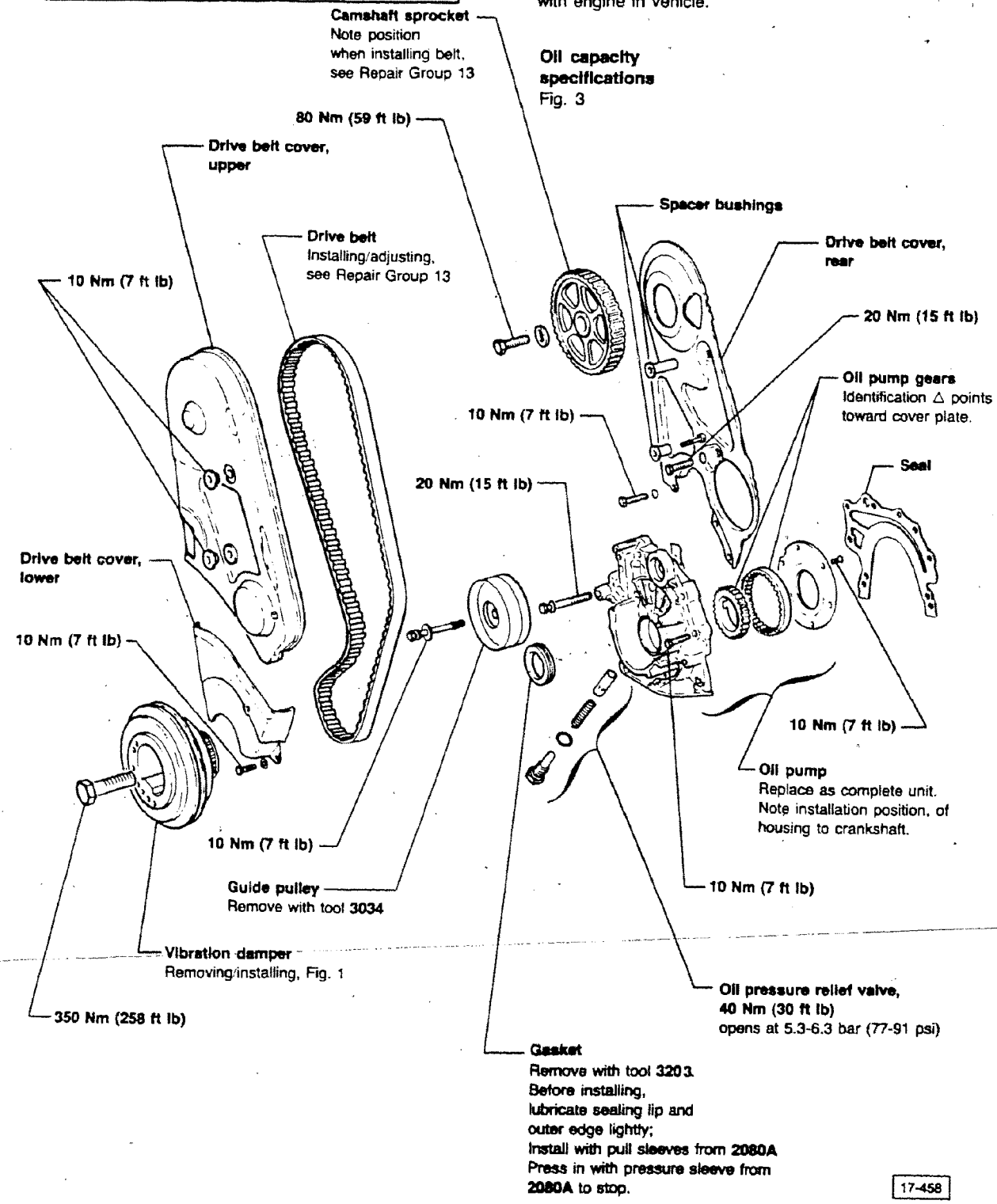

cardiagn.com

CAUTION

If, as a result of engine damage, large quantities of metal shavings are found in the engine oil, oil passages should be cleaned and the oil filter replaced.

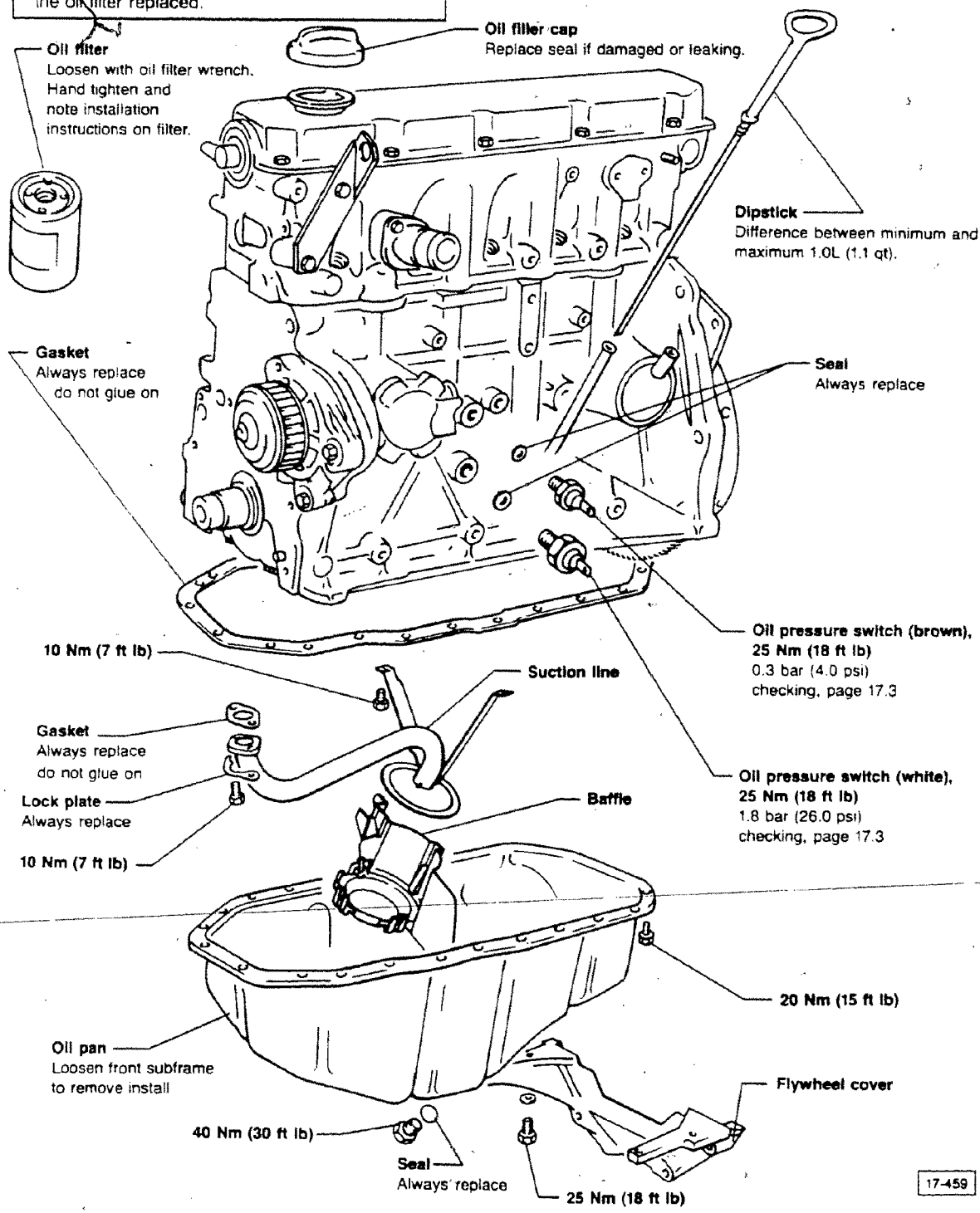

cardiagn.com

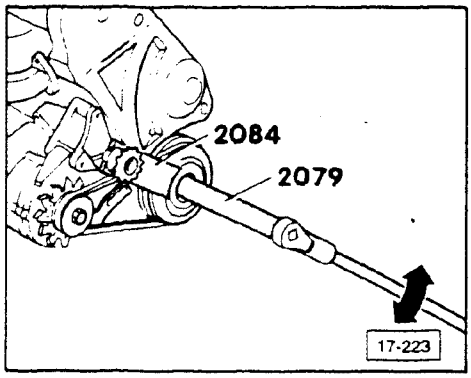

▶ **Fig. 1 Vibration damper, removing/installing**

- torque 350 Nm (258 ft lb)

- tighten with extension **2079** in alignment with torque wrench
- coat threads and contact surfaces of bolt head with anti-corrosion compound **AMV 188 001 02**

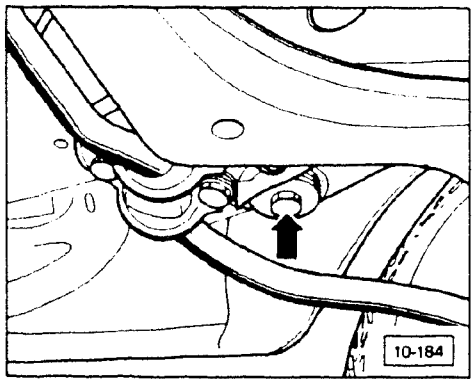

▶ **Fig. 2 Lowering subframe**

- remove both screws of subframe (**arrow**)

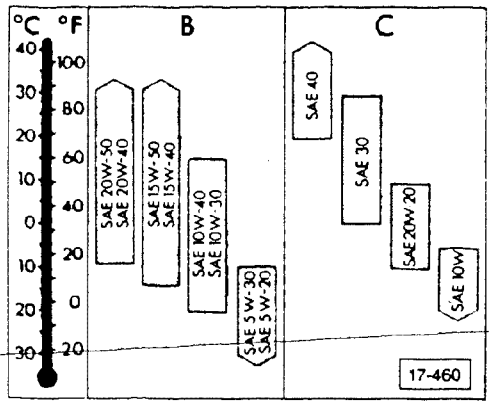

▶ **Fig. 3 Oil capacity, specifications**

Oil specifications

Use only oil marked **SF**
B = multi-grade oil
C = single grade oil

Oil capacity

with filter 3.5L (3.7 qts)
without filter 3.0L (3.2 qts)

cardiagn.com

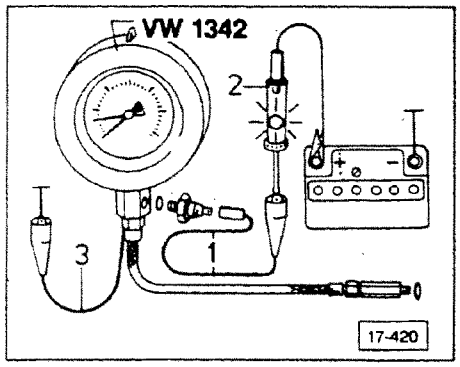

Oil pressure switch brown (0.3 bar), checking

- remove 1.8 bar (26 psi) oil pressure switch (white insulation) and install into test gauge
- install **VW1342** in place of 1.8 bar (26 psi) oil pressure switch
- remove wire to 0.3 bar (4 psi) oil pressure switch, and install blue wire **1** from test device

- connect test lamp **2** to wire **1** and battery **plus** terminal
- connect wire **3** (brown) to suitable ground point on car
  - test light must come on

- start engine and increase RPM slowly
  - at a pressure of 0.15-0.45 bar (2.2-6.5 psi) test light must go out, if **no**, replace switch

Oil pressure switch white (1.8 bar), checking

- remove wire **1** from 0.3 bar (4 psi) oil pressure switch, and connect to 1.8 bar (26 psi) oil pressure switch (white insulation)
- start engine and increase RPM slowly
  - at a pressure of 1.6-2.0 bar (23-29 psi) test light must come on, if not replace switch

- continue to increase RPM
  - at 2000 RPM, minimum pressure must be **at least** 2.0 bar (29 psi), if **no**, replace switch

cardiagn.com

THIS FRAME INTENTIONALLY LEFT

BLANK

cardiagn.com

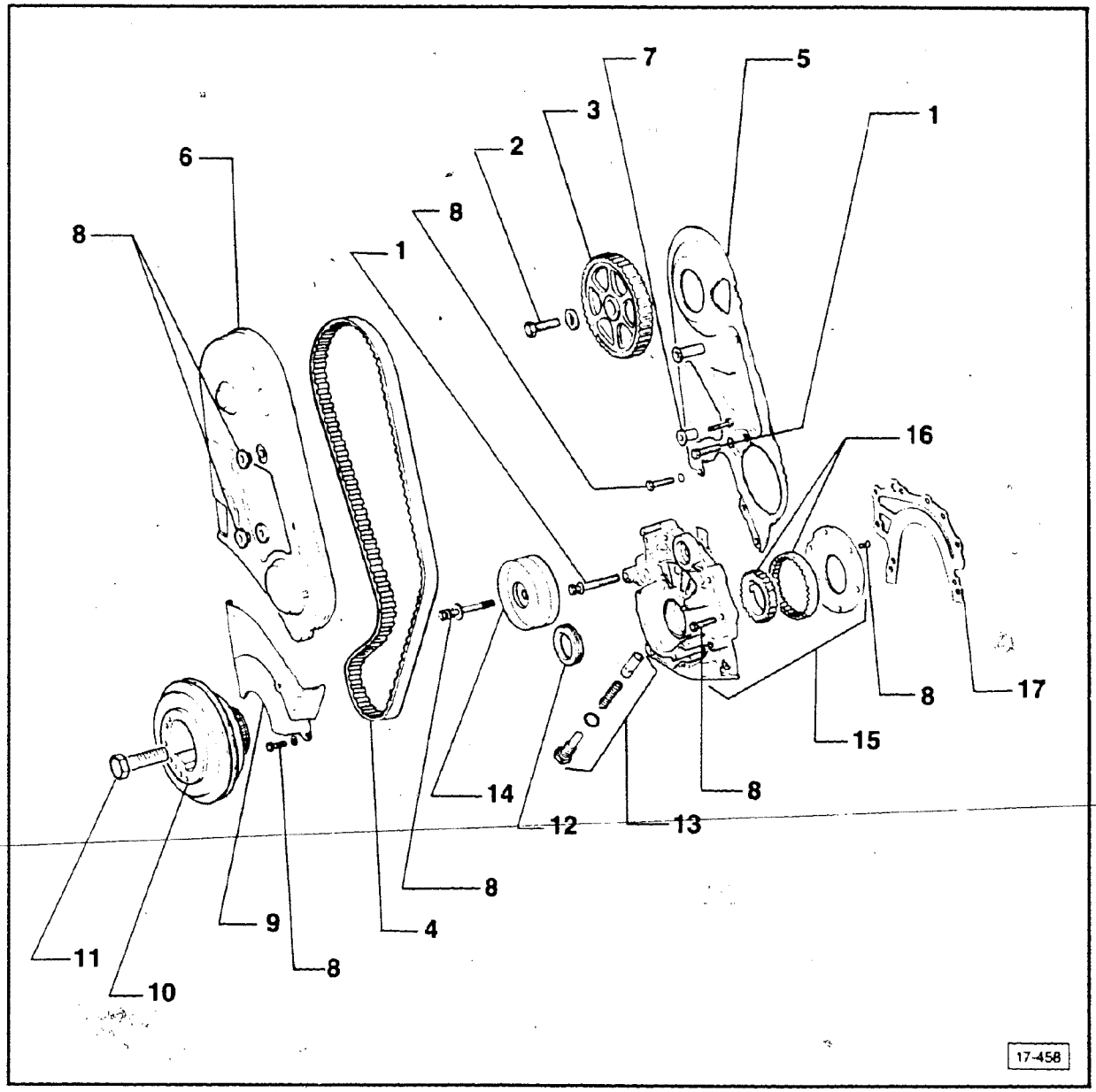

Note

All of the components in this illustration can be removed/installed with the engine installed.

1 — **10 Nm (7 ft lb)**

2 — **65 Nm (48 ft lb)**

3 — **Camshaft sprocket**
- note position when installing drive belt
also see Group 13

4 — **Drive belt**
Also see Group 13

5 — **Drive belt cover** (rear)

6 — **Drive belt cover** (upper)

7 — **Spacer bushings**

8 — **10 Nm (7 ft lb)**

9 — **Drive belt cover** (lower)

10 — **Vibration damper**
also see Group 13

cardiagn.com

11 — **350 Nm**
Tighten only by using tool **2079** and **2084** (see Group 13)
Coat threads and contact surfaces of screw head with sealing paste **AMV 188 00102**

12 — **Oil Seal**
removing/installing see page 17.14

13 — **Oil pressure relief valve with oil temperature sensor**
opening pressure: **5** to **8** bar (73 to 116 psi)

14 — **Idler pulley**
removing, page 17.14

15 — **Oil Pump**
removing, page 17.13
Replace only as an assembly
Watch for alignment pin on crankshaft when installing

16 — **Oil pump gears**
triangular symbol faces in direction of cover

17 — **Gasket**
replace

cardiagn.com

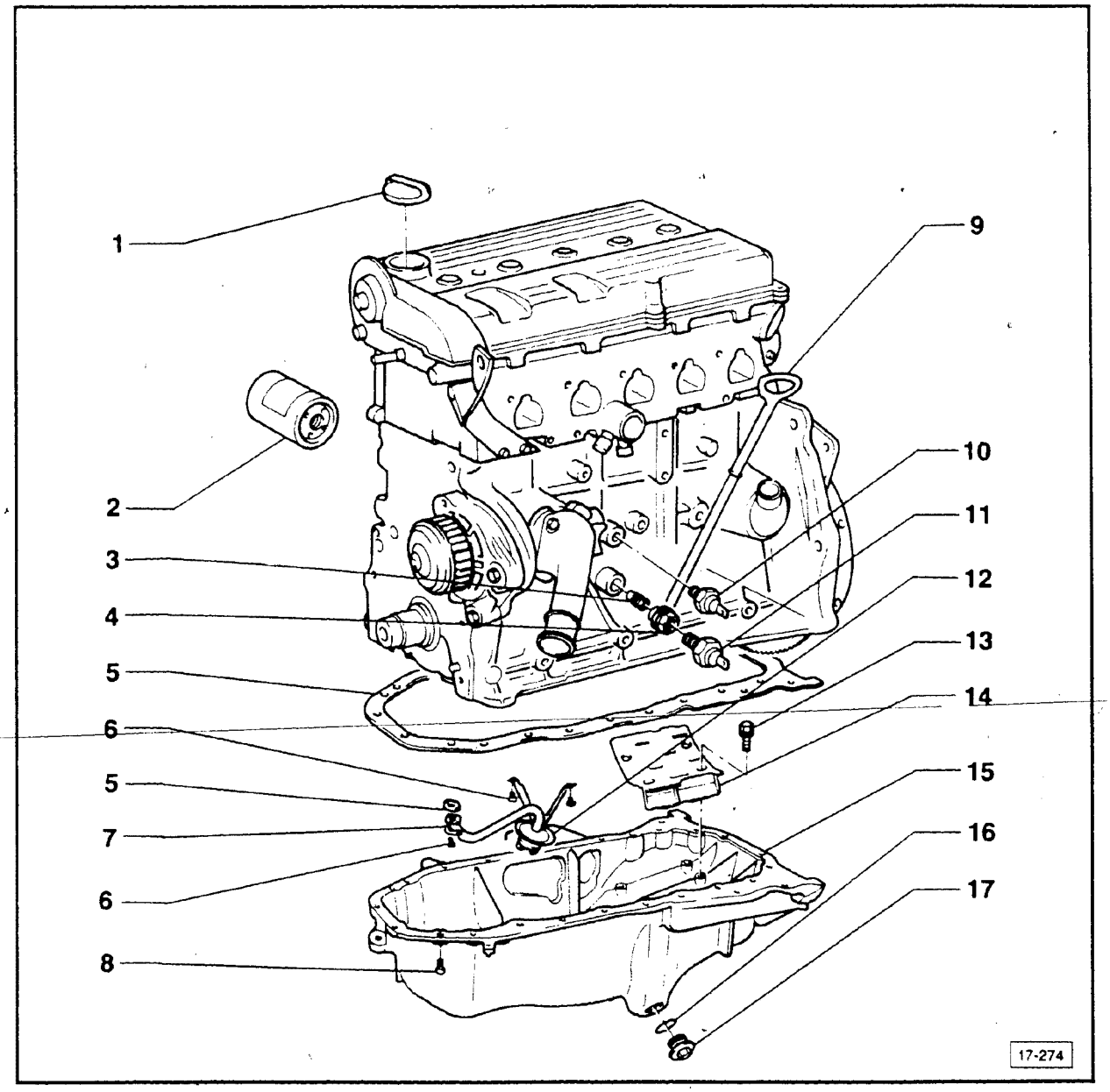

CAUTION

If, as a result of engine damage, large quantities of metal shavings are found in the engine oil, thoroughly clean the oil passages and replace the oil filter.

1 — **Oil filler cap**
replace seal if damaged

2 — **Oil filter**
Loosen with wrench
Tighten by hand
Follow instructions on filter

3 — **Oil check valve**
6 Nm (53 in lb)
install using D6 locking compound

4 — **Adaptor**
50 Nm (37 ft lb)

5 — **Seal**
replace
do not attach with adhesives

6 — **10 Nm (7 ft lb)**

7 — **Lock tab**
replace

cardiagn.com

8 — **M6 10 Nm (7 ft lb)**
M8 20 Nm (15 ft lb)

9 — **Oil dip stick**

10 — **Oil pressure switch** (white)
1.8 bar (26 psi)
25 Nm (18 ft lb)
checking, page 17.16

11 — **Oil pressure switch** (brown)
0.3 bar (4.4 psi)
25 Nm (18 ft lb)
checking, page 17.15

12 — **Oil pickup tube**
tighten at oil pump first

13 — **10 Nm (7 ft lb)**

14 — **Baffle**

15 — **Oil pan**
Loosen front mount to remove/install oil pan, page 17.13
Clean the sealing surfaces before installation

16 — **Seal**
replace

17 — **30 Nm (22 ft lb)**

cardiagn.com

Oil pump, removing

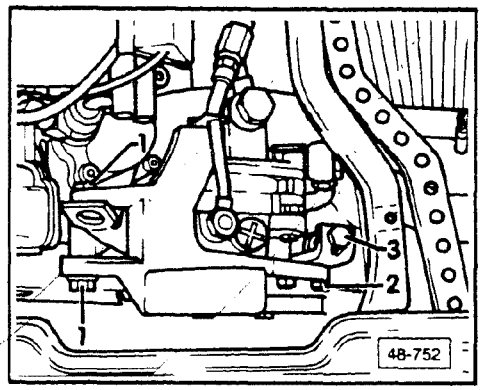

- loosen and remove V-belt for alternator, A/C compressor and Central Hydraulic System pump by loosening both bolts **1** and both nuts **2**
- remove Central Hydraulic System pump and lay to one side (hoses left connected)
- remove vibration damper bolt (see Group 13)
- remove drive belt cover

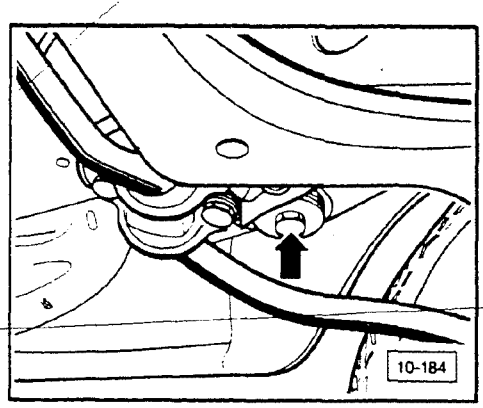

- remove both front bolts (**arrow**) on subframe
- remove oil dip stick
- drain engine oil

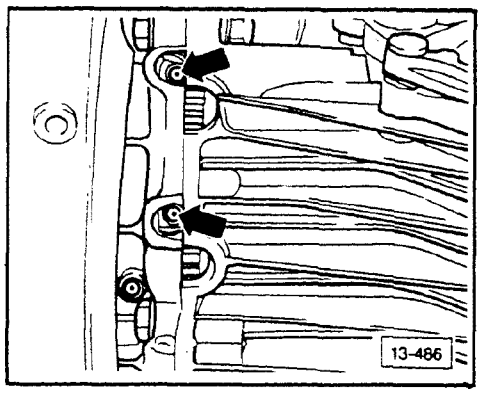

- rotate engine until flywheel recesses align with oil pan bolts (**arrows**)
- remove oil pan bolts
- remove oil pan

- rotate engine to **TDC** (align with marking on drive belt sprocket, also see Group 15)

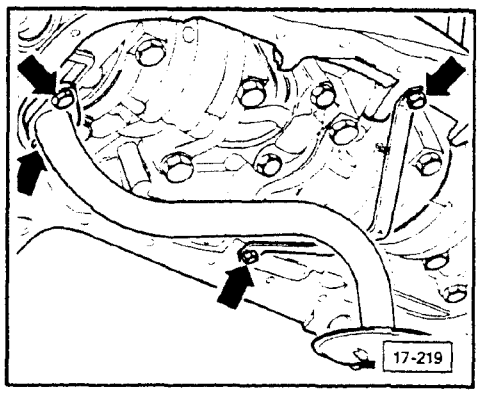

- remove oil pickup tube (**arrows**)

cardiagn.com

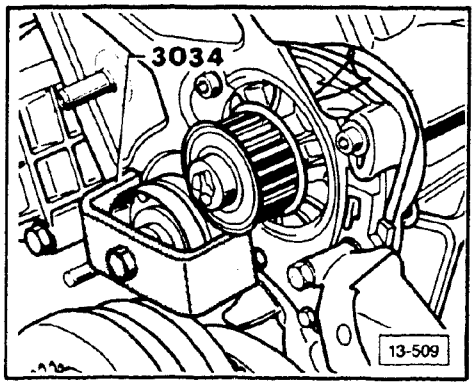

- remove idler pulley using **3034** puller
  - remove idler pulley only if replacing oil pump or if there is bearing damage to the pulley

Note

To remove the oil pump only the mounting bolt needs to be removed.

- remove oil pump

Crankshaft oil seal, removing

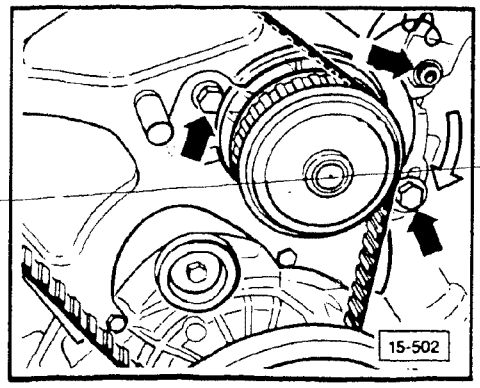

- turn coolant pump in direction of arrow **A** to remove drive belt, sprocket and pulley

> **CAUTION**
>
> Crankshaft must **NOT** be turned.

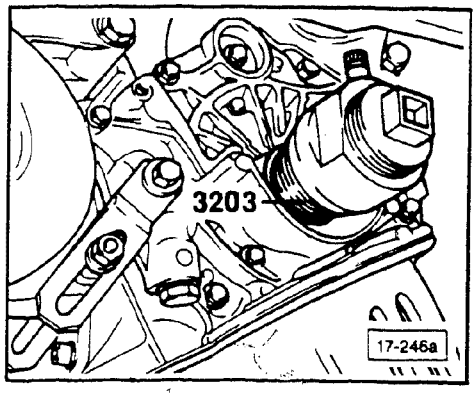

- remove vibration damper assembly, see page 17.7
- remove oil seal using tool **3203**

cardiagn.com

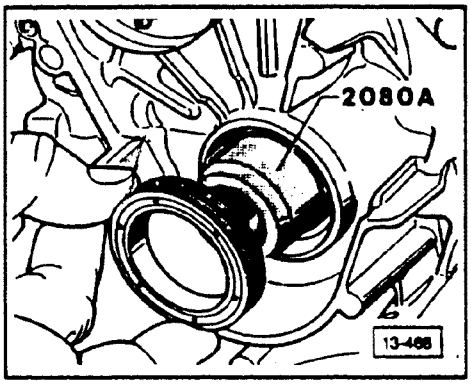

Crankshaft oil seal, installing

- slip inner seal guide of tool **2080 A** over crankshaft
- coat oil seal lip and outer surface with a light coating of oil
- carefully push seal over seal guide of tool **2080 A**

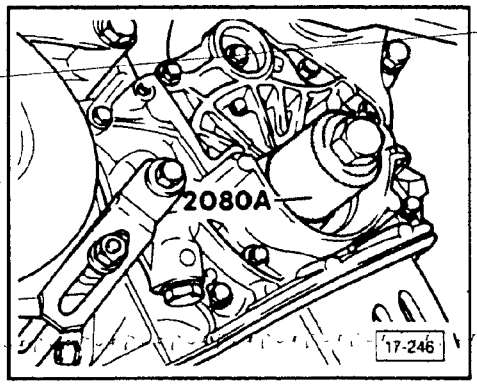

- slide outer sleeve of tool **2080 A** over seal guide/seal
- tighten outer sleeve against seal using vibration damper bolt until seal is seated

Note

If the crankshaft is scored or worn in the area of oil seal contact; press the seal into the casting until it bottoms. If there is no crankshaft wear; press in the seal flush with the surface of the casting.

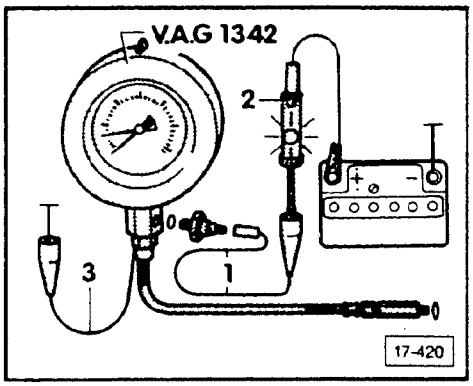

Oil pressure switch (0.3 bar), checking

- remove oil pressure switch, install in gauge and connect wire **1** (blue) to switch
- install pressure tester **VW 1342** (**arrow**) in place of oil pressure switch
- connect test lamp **2** to wire **1** (blue) and battery positive
- connect wire **3** (brown) to suitable ground point
  - test lamp must light up

If **NO**

- replace oil pressure switch
- start engine and slowly increase engine speed
  - light must go out when pressure exceeds a minimum of 0.15 bar to a maximum of 0.45 bar (2.2 to 6.5 psi)

If **NO**

- replace 0.3 bar oil pressure switch

Note

It may be necessary to check the switching point while cranking the engine.

I-17

cardiagn.com

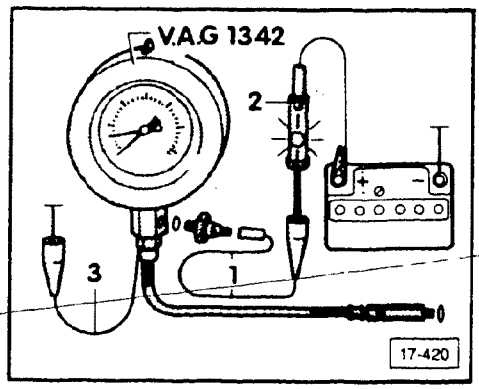

Oil pressure switch (1.8 bar), checking

- remove oil pressure switch, install in gauge and connect wire **1** (blue) to switch
- install pressure tester **VW 1342** (**arrow**) in place of oil pressure switch
- connect test lamp **2** to wire **1** (blue) and battery positive terminal
- connect wire **3** (brown) to suitable ground
  - test lamp must **NOT** light up

- start engine and slowly increase engine speed
  - at a pressure of 1.6 to 2.0 bar (23 to 29 psi) test lamp must light up

If **NO**
- replace 1.8 bar oil pressure switch
- increase engine speed to 2000 RPM
  - oil pressure should be 2.0 bar (29 psi) minimum

- increase engine speed until pressure relief valve opens
  - minimum of 5.0 bar and maximum of 8.0 bar (73 to 116 psi)

Note

The hydraulic valve lifters are subjected to excess pressure if the oil pressure is significantly increased (pressure relief valve is stuck or improperly installed). The engine will then shut down shortly after starting, next when attempting to restart, the engine turns over extremely fast during cranking as a result of low compression (extended lifters).

cardiagn.com

Index

4-cylinder

Antifreeze hydrometer
- checking 19.6

Coolant
- hoses 19.3
- pump 19.3
- thermostat 19.3

Cooling system
- draining/refilling 19.4

Radiator
- assembly 19.2
- cooling fan 19.5
- fan, thermoswitch 19.5

5-cylinder

Antifreeze hydrometer
- checking 19.9

Cooling system
- draining/refilling 19.10

Coolant
- hoses 19.8
- pump 19.8
- thermostat 19.8

Radiator
- assembly 19.7
- fan, thermoswitch 19.9

Coupe

Components
- layout 19.11

Cooling system
- draining 19.15

Radiator
- removing 19.16

Thermoswitch
- checking 19.16

cardiagn.com

CAUTION

Always replace gaskets and seals.
Always secure hoses with hose clamps.

CAUTION

Coolant/antifreeze **must not** be reused when replacing engine, cylinder head, cylinder head gasket, radiator and heater core.

Note

Perform cooling system checking with Snap-On® **SVT 362** and **US 4467**

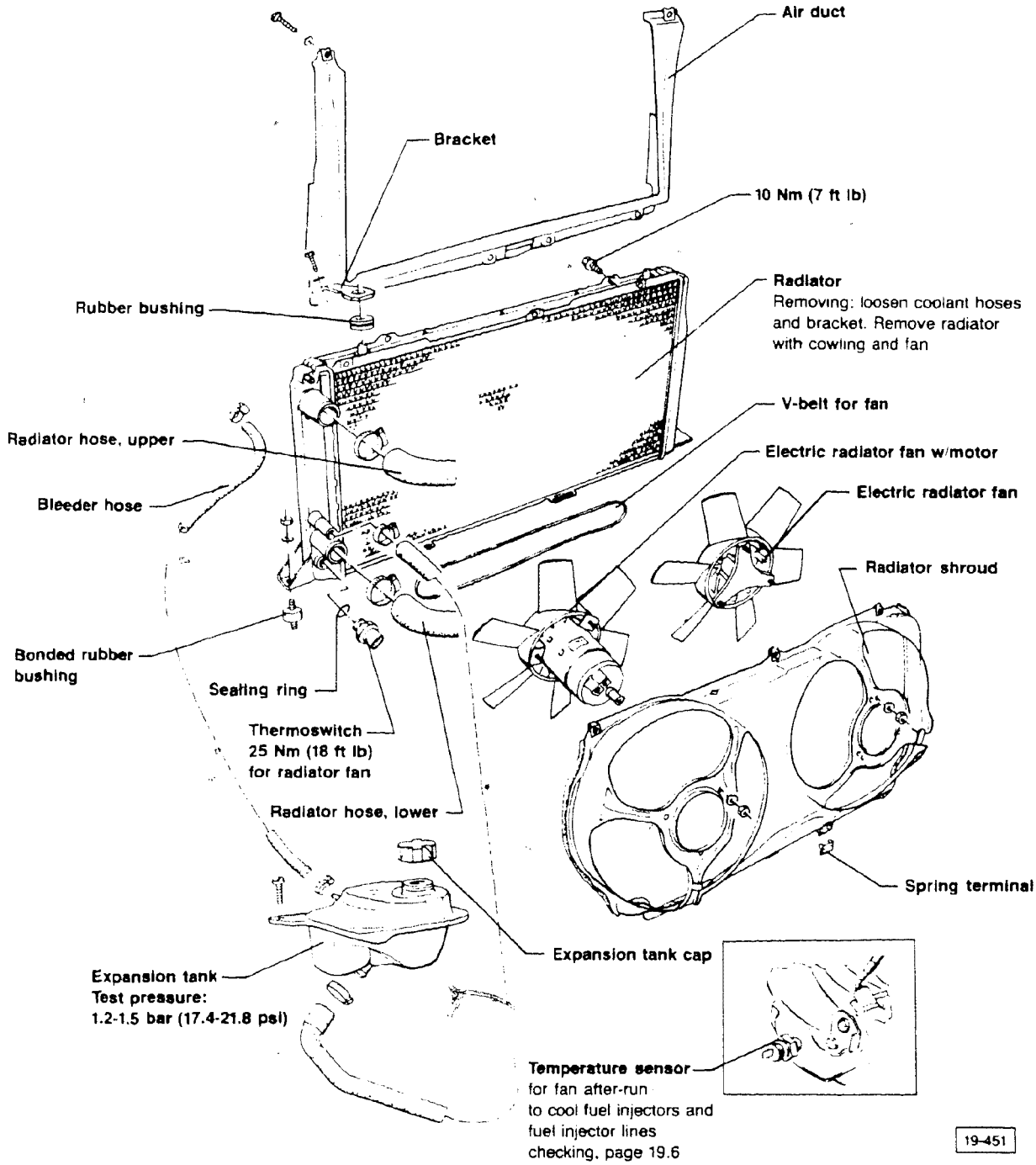

J-2

cardiagn.com

CAUTION

Always replace gaskets and seals. Always secure hoses with hose clamps.

CAUTION

If engine is internally damaged and as a result large quantities of metal shavings are found in the engine oil, oil passages must be cleaned and the oil filter, oil cooler replaced.

Note

Components shown can be removed/installed with engine in vehicle.

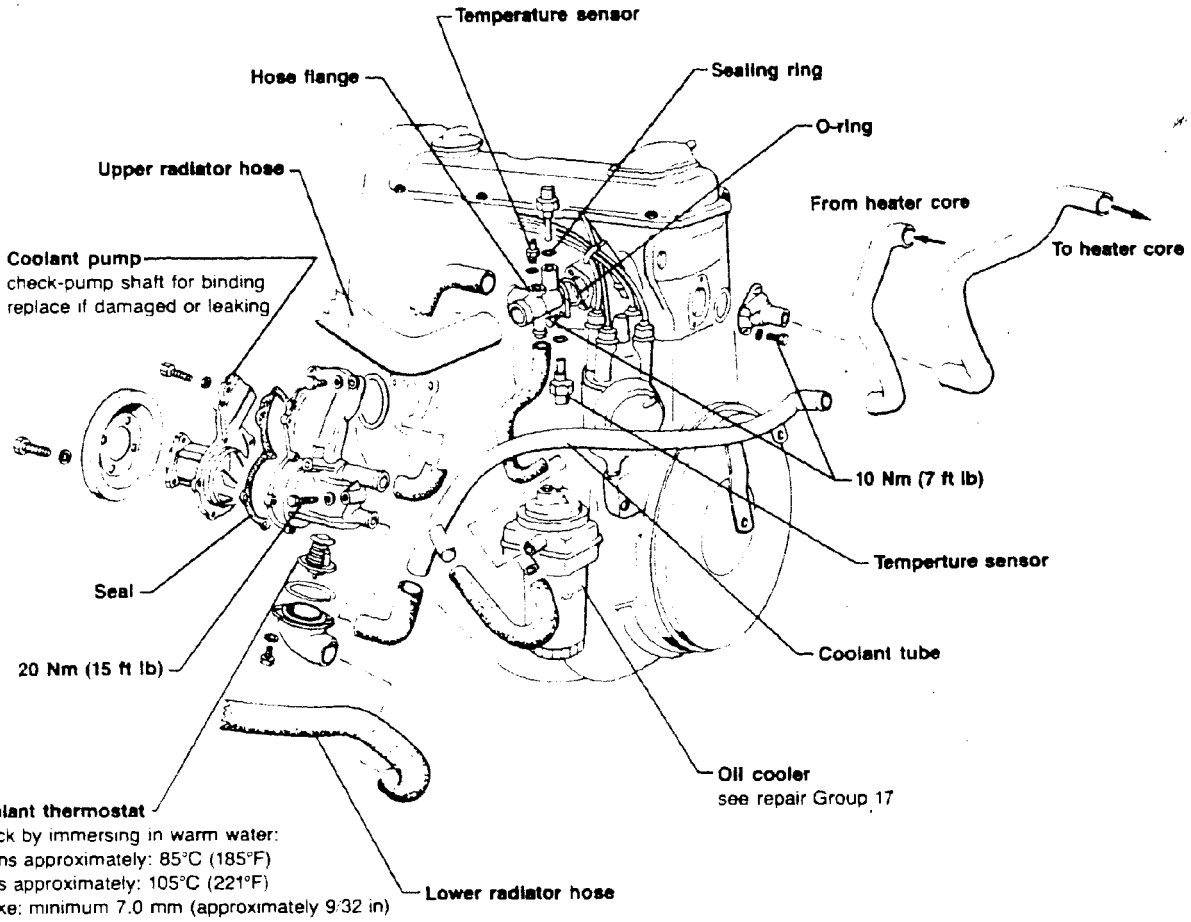

19-435

cardiagn.com

CAUTION

Coolant antifreeze **must not** be reused when replacing engine, cylinder head, cylinder head gasket, radiator and heater core.

CAUTION

Part numbers are for reference only. Always check with your Parts Department for latest information.

Recommended mixtures

Protection	Anti-freeze	Water
–25°C (–13°F)	2.8L (3.0 qts)	4.2L (4.5 qts)
–35°C (–31°F)	3.5L (3.7 qts)	3.5L (3.7 qts)

Cooling system, draining/refilling

The cooling systems of **all** Audi vehicles are filled at the factory with a mixture of water and an antifreeze solution (G 11) with corrosion inhibitors. This coolant mixture should be used year-round.

Phosphate-free antifreeze prevents frost and corrosion damage, the formation of chalk and in addition, it raises the boiling point of water. Due to the higher boiling point the coolant is an aid to operational efficiency, when the engine is operating under full load, particularly in tropical climates.

When replacing coolant/antifreeze solution in all Audi models, all model years, use phosphate-free coolant/antifreeze ZVW237 102.

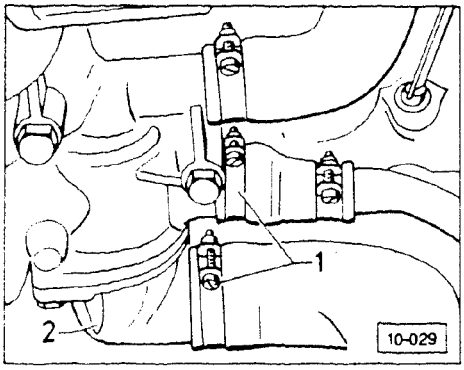

Draining

- set heater control to **warm**
- remove expansion tank cap
- drain coolant either at coolant hoses **1**, or thermostat flange **2**

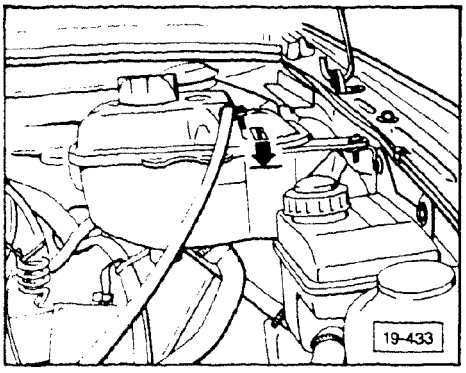

Refilling

- reinstall and secure all hoses
- fill expansion tank with coolant to **maximum** mark
- reinstall expansion tank cap
- run engine until electric fan comes on
- check coolant level, and top up as necessary

Note

When the engine is at normal operating temperature, coolant level in expansion tank should be slightly above the **maximum** mark. When engine is cold, the coolant level should be between **minimum** and **maximum** marks.

cardiagn.com

WARNING

Never touch the radiator fan blades.
They will rotate spontaneously when the time relay turns the fan on. Heat in engine compartment may cause repeat of this cycle more than once after the ignition is turned off.

Radiator cooling fan timed run-on

Vehicles are now equipped with a radiator cooling fan timed run-on system to cool fuel lines and injectors after the engine is turned off to improve hot start characteristics.

How the system works

When the underhood temperature is higher than 110°C (230°F) after the ignition is turned off, the thermo switch will trigger the time relay to switch on the radiator cooling fan.

When the temperature falls below 103°C (217°F) the relay will turn off the radiator cooling fan. This cycle will repeat once or more for maximum of 10-12 minutes.

Components

Thermo switch

Mounted on bracket on cylinder head (injector side) between cylinders one and two.

Time relay

After thermo switch is grounded, operate radiator fan at first speed for 10-12 minutes after ignition is turned off.

Radiator fan thermoswitch, switching values

Switch	Cut in/out temperatures	
	in	out
three cavity B+ first speed	92-97°C (198-207°F)	84-91°C (175-196°F)
second speed	99-105°C (210-221°F)	91-98°C (196-208°F)

cardiagn.com

Troubleshooting

Time relay

Located on auxiliary relay carrier, under left side of instrument panel.

- switch ignition on and off
- connect thermo switch wire to ground. Make sure fan runs on first speed

Note

Because the time relay is only operational for 10-12 minutes after the ignition is turned off, testing must be done within this time period.

Thermo switch

ON = Grounded when engine compartment temperature is over 110°C (230°F)

OFF = **NOT** grounded when engine compartment temperature is below 103°C (217°F)

Electrical wiring

For electrical troubleshooting see applicable wiring diagram.

Antifreeze hydrometer, checking

Calibration of hydrometer must be checked frequently to ensure accuracy.

- mix a 50/50 mixture of antifreeze and water together in a small container
- hydrometer should read −35°C (−30°F)
  - if not, put a mark (paint dot) to indicate where −35°C (°30°F) should be.

cardiagn.com

THIS FRAME INTENTIONALLY LEFT

BLANK

cardiagn.com

CAUTION

Always replace gaskets and seals. Always secure hoses with hose clamps.

CAUTION

Coolant/antifreeze **must not** be reused when replacing engine, cylinder head, cylinder head gasket, radiator and heater core.

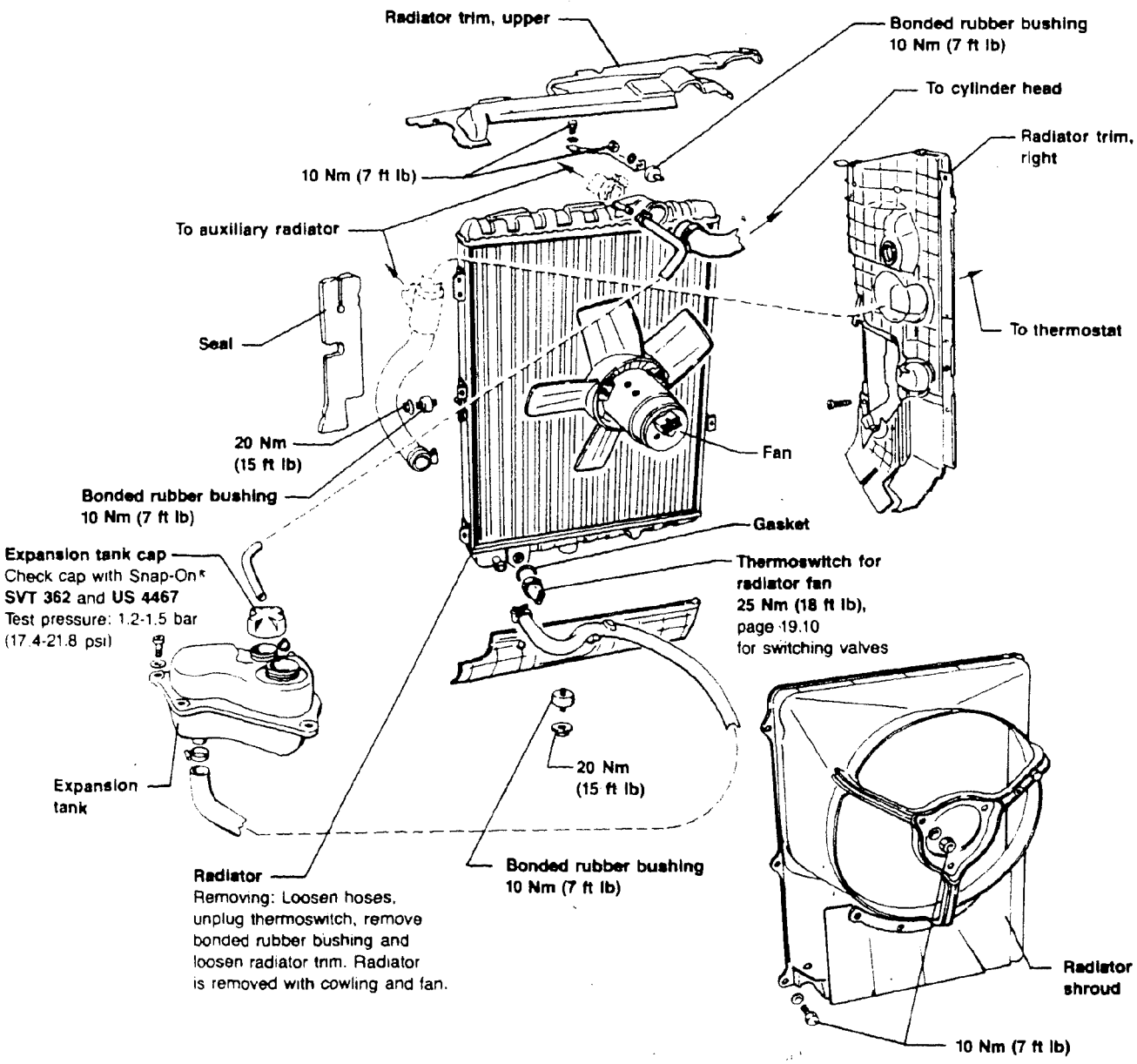

J-8

cardiagn.com

CAUTION

Always replace gaskets and seals.
Always secure hoses with hose clamps.

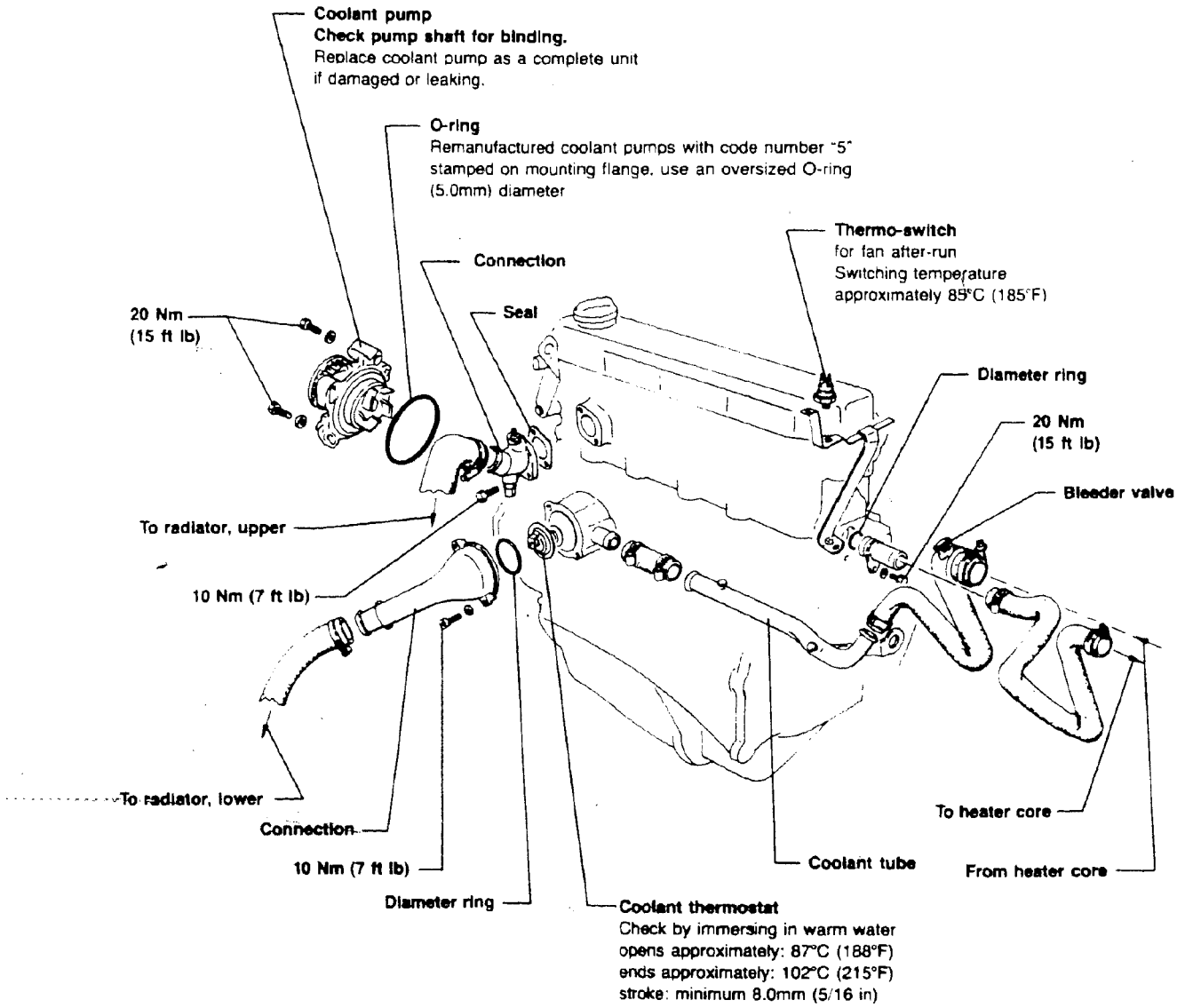

19-449

J-9

cardiagn.com

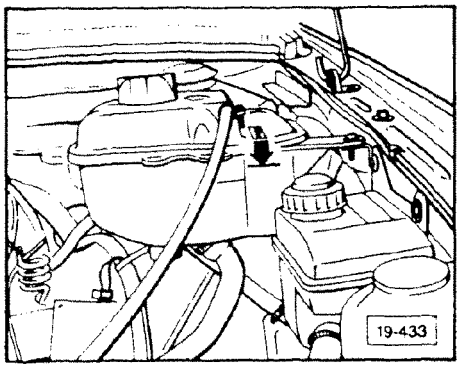

Coolant level, checking

When the engine is at operating temperature, coolant level in expansion tank should be slightly above the **maximum** mark (**arrow**). When engine is cold, the coolant level should be between **minimum** and **maximum** marks.

Switch	Cut in/out temperatures	
	in	out
two cavity	92-97°C (198-207°F)	84-91°C (175-196°F)
three cavity with B+		
first speed	92-97°C (198-207°F)	84-91°C (175-196°F)
second speed	99-105°C (210-221°F)	91-98°C (196-208°F)

Radiator fan thermoswitch, switching values

Antifreeze hydrometer, checking

Calibration of hydrometer must be checked frequently to ensure accuracy.

— mix a 50/50 mixture of antifreeze and water together in a small container
— hydrometer should read −35°C (−30°F)
- if not, put a mark (paint dot) to indicate where −35°C (−30°F) should be.

cardiagn.com

CAUTION

Coolant/antifreeze **must not** be reused when replacing engine, cylinder head, cylinder head gasket, radiator and heater core.

CAUTION

Part numbers are for reference only. Always check with your Parts Deaprtment for latest parts information.

Cooling system, draining/refilling

The cooling systems of **all** Audi vehicles are filled at the factory with a mixture of water and an antifreeze solution (G 11) with corrosion inhibitors. This coolant mixture should be used year-round.

Phosphate-free antifreeze prevents frost and corrosion damage, the formation of chalk and in addition, it raises the boiling point of water. Due to the higher boiling point the coolant is an aid to operational efficiency, when the engine is operating under full load, particularly in tropical climates.

When replacing coolant/antifreeze solution in all Audi models, all model years, use phosphate-free coolant/antifreeze ZVW237 102.

Recommended mixtures

Protection	Anti-freeze	Water
−25°C (−13°F)	3.2L (3.4 qts.)	4.8L (5.1 qts.)
−35°C (−31°F)	4.0L (4.2 qts.)	4.0L (4.2 qts.)

Draining

- remove expansion tank cap
- disconnect coolant hose for heater at engine block
- loosen hose to coolant tube (**arrow**)

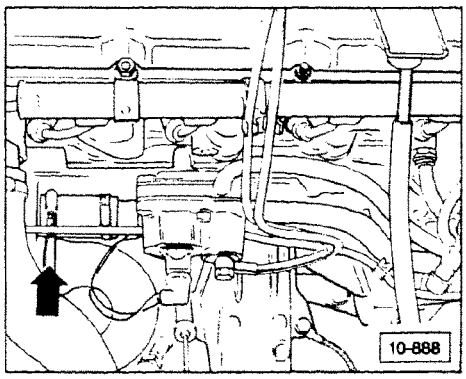

Refilling

- reinstall and secure all hoses
- open bleeder screw (**arrow**)
- fill with coolant to **maximum** mark on expansion tank
- close bleeder screw when coolant starts to come out
- reinstall expansion tank cap
- run engine until radiator fan comes on

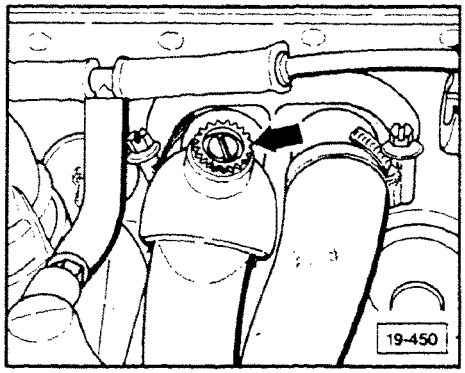

cardiagn.com

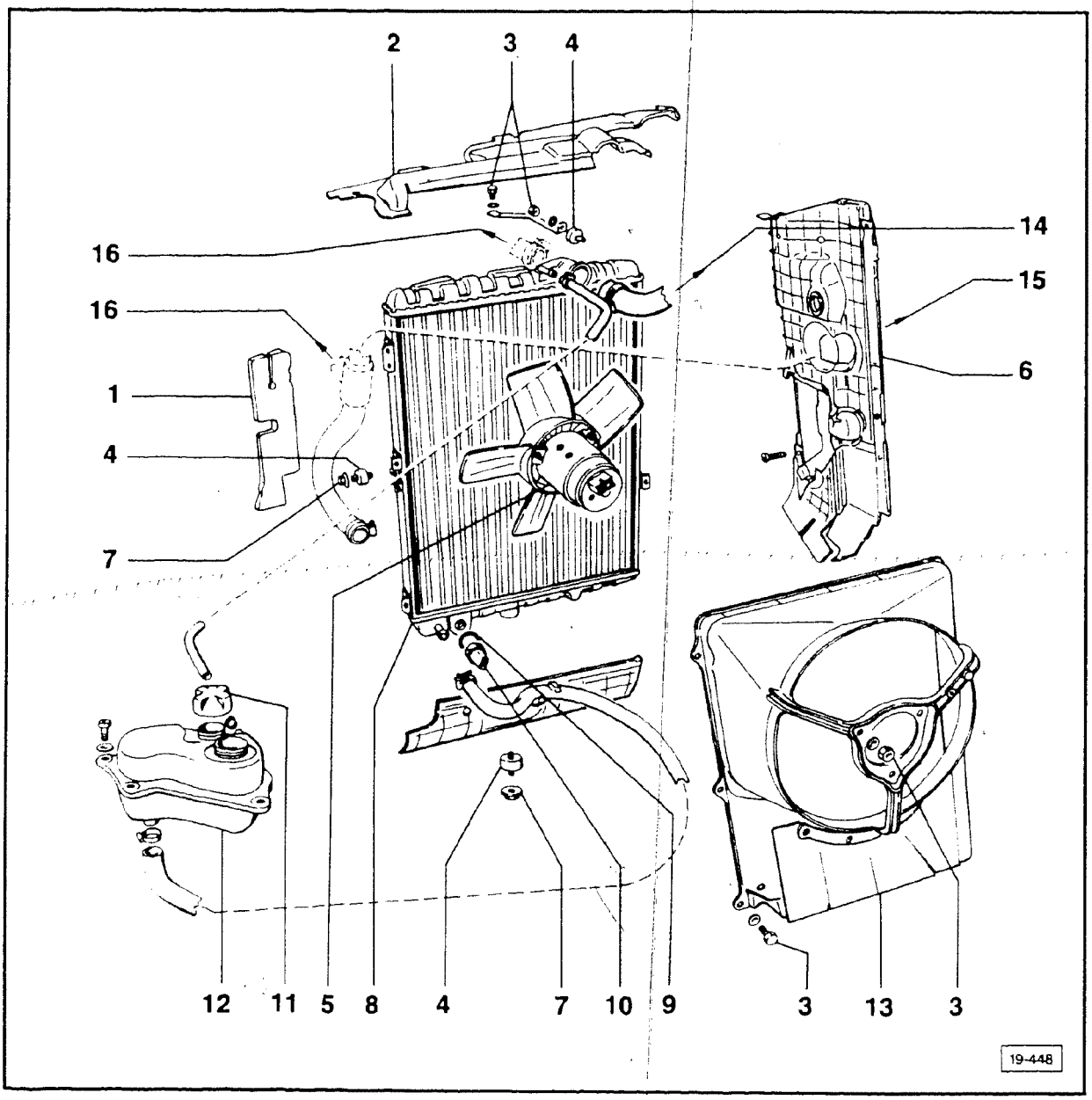

Note

Check cooling system for leakage using **VAG 1274** and **VAG 1274/1A**
Draining filling coolant, see page 19.15
Coolant mixture ratio, page 19.15
Replace gaskets and seals
All hose connections must be secured using screw type clamps

1 — **Seal**

2 — **Radiator cowl,** upper section

3 — **10 Nm (7 ft lb)**

4 — **Bushing** (rubber bonded type) **10 Nm (7 ft lb)**

5 — **Radiator cooling fan**

6 — **Radiator cowl,** right side

7 — **20 Nm (15 ft lb)**

8 — **Radiator** Removing, page 19.16

9 — **Seal**

cardiagn.com

10 — **Thermoswitch**
25 Nm (18 ft lb)
Checking, page 19.16

11 — **Cap**
for coolant expansion tank
Checking:
using tool **VAG 1274** and
VAG 1274/1A check pressure
- must be 1.2 to 1.5 bar
  (17.4 to 21.8 psi)

12 — **Coolant expansion tank**

13 — **Fan shroud**

14 — to connection at cylinder head

15 — to connection at thermostat

16 — to auxiliary radiator

cardiagn.com

THIS FRAME INTENTIONALLY LEFT

BLANK

cardiagn.com

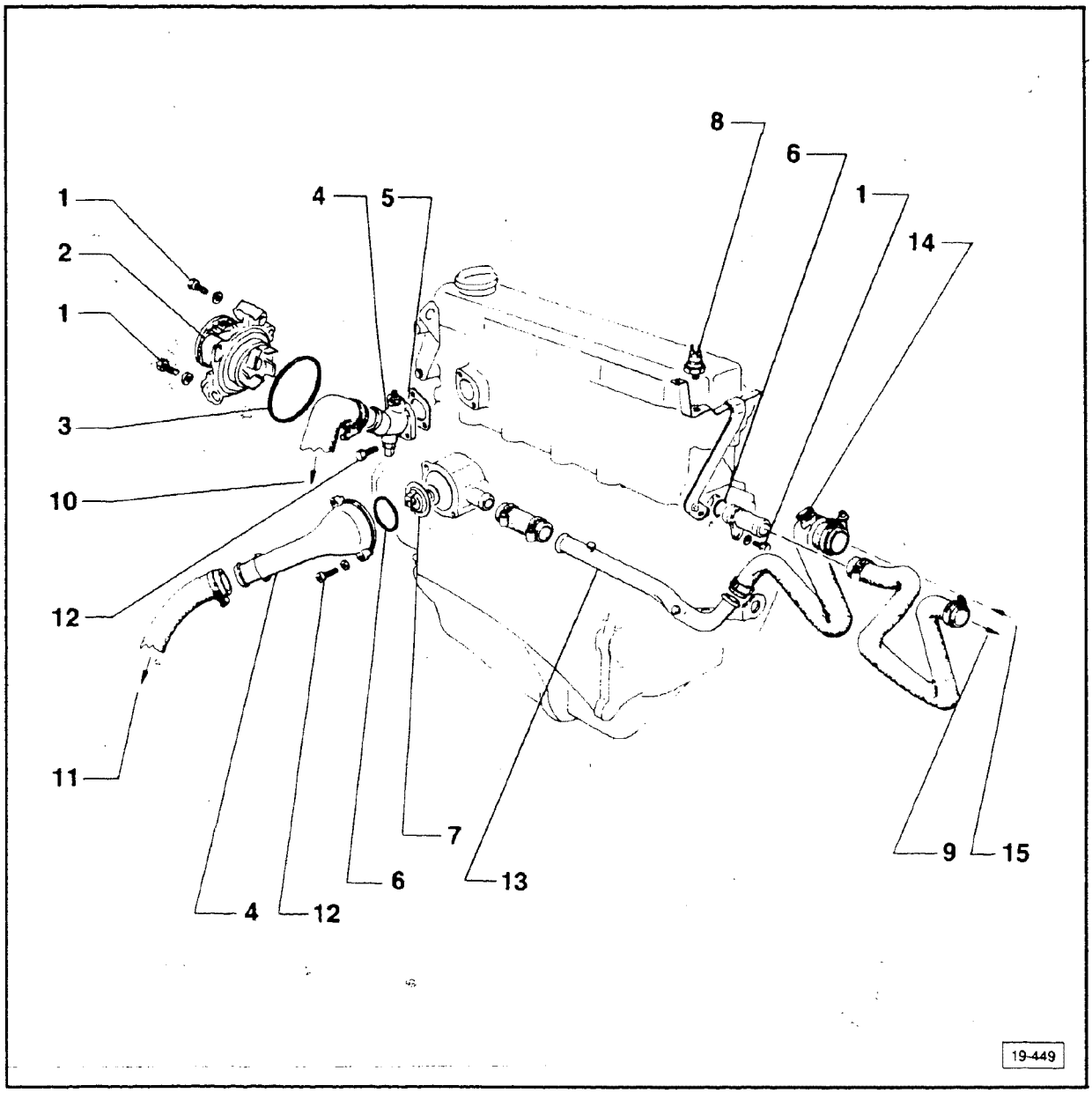

Note

Replace gaskets and seals
All components shown in illustration can be removed and installed with engine installed
All hose connections are secured with screw type clamps

1 — **20 Nm (15 ft lb)**

2 — **Water pump**
Check pump shaft for binding, replace if damaged or leaking

3 — **O-ring**
Replace if damaged or leaking using oversize seal (0.5 mm, part number **069 121 043**)

4 — **Hose flange**

5 — **Gasket**

6 — **O-ring**

7 — **Thermostat**
Checking: heat in water bath
Starts to open @ 87°C (189°F)
Full open @ 102°C (216°F)
Opening distance: 8.0 mm minimum (0.3 in.)

8 — **Thermoswitch**
For fan after-run
Switching temperature: approximately 85°C (185°F)

9 — to heater core

10 — to upper radiator

11 — to lower radiator

12 — **10 Nm (7 ft lb)**

13 — **Coolant tube** (metal)

14 — **Vent valve**

15 — from heater core

J-15

cardiagn.com

Coolant, draining/filling

Note

The cooling system of all Audi vehicles is filled at the factory with a mixture of water and antifreeze solution (**G11**) containing corrosion inhibitors designed for year round use.

Phosphate-free antifreeze prevents frost, corrosion damage, the formation of chalk and in addition raises the boiling point of the mixture. Due to the higher boiling point operational efficiency is improved under full load, particularly in tropical climates.

Use phosphate-free coolant/antifreeze part number **ZVW237 102** whenever replacing or topping up. This applies to **ALL** Audi models for **ALL** model years.

Recommended mixture ratios:	
Outside temperature (down to)	**Antifreeze Water** (G11)
– 13°F (– 25°C)	**3** parts to **2** parts
– 31°F (– 35°C)	**1** part to **1** part

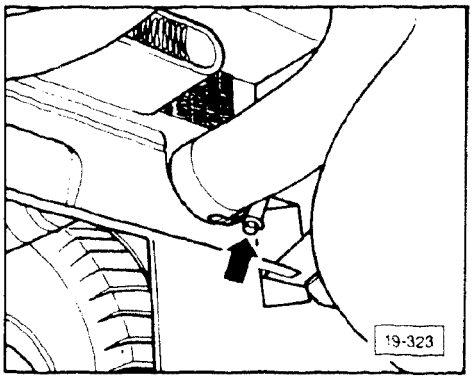

Coolant, draining

- remove cap on expansion tank
- drain coolant
- loosen coolant hose to heater on rear of engine block
- loosen lower radiator hose

cardiagn.com

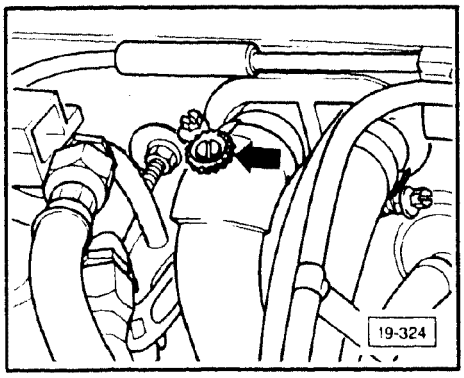

Cooling system, filling

- open vent valve screw (**arrow**)
- fill coolant up to "**max**" mark on expansion tank
- observe vent valve; close when coolant starts to come out

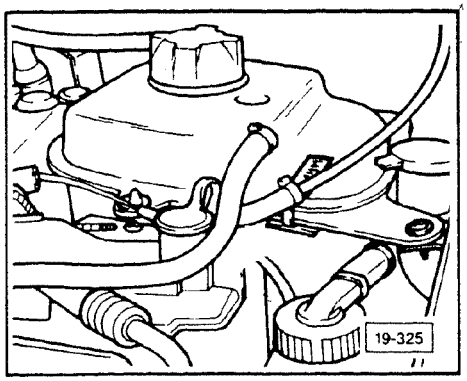

- put cap on expansion tank
- run engine until electric fan comes on
- check coolant level and top up if necessary

Note

When the engine is at normal operating temperature, coolant level in the expansion tank should be slightly above the **maximum** mark. When the engine is cold, the coolant level should be between the **minimum** and the **maximum** marks.

Radiator, removing

- loosen hoses, harness connector to thermoswitch, rubber bonded bushing and A/C condenser
- loosen right radiator cowl from radiator and remove radiator complete with fan shroud and fan

Note

Vehicles with ABS, the fan motor also has to be loosened and pushed forward.

Radiator fan thermoswitch, switching values

Switch	Cut In/Out temperatures In	Out
1st speed	92 to 97°C 198 to 207°F	84 to 91°C 175 to 196°F
2nd speed	99 to 105°F 210 to 221°F	91 to 98°C 196 to 208°F

cardiagn.com

Index

index continues on next row down

4-cylinder

Carbon canister
- component layout 20.4
- frequence valve, checking 20.5

Fuel pump
- checking 20.9
- check valve 20.10
- delivery quantity 20.11
- relay 20.8
- remote control, connecting 20.7
- system components 20.2

Rules of cleanliness
- chart 20.7

5-cylinder

Carbon canister
- component layout 20.6

Fuel pump
- checking 20.9
- check valve 20.10
- delivery quantity 20.11
- relay 20.8
- remote control, connecting 20.7
- system components 20.2

Rules of cleanliness
- chart 20.7

90 Quattro 20V

Carbon canister shut-off valve
- checking 20.21

Fuel pump
- checking 20.17
- relay, checking 20.20

Fuel pump check valve
- checking 20.21
- replacing 20.22

Fuel pump delivery rate
- checking 20.18

Fuel system
- component layout 20.12

Fuel tank
- removing/installing 20.23

Rules of cleanliness
- chart 20.16

cardiagn.com

WARNING

Fire hazard. Do not smoke or have anything in area that can ignite fuel.

Note

- always replace all seals and clamps
- always observe rules of cleanliness — page 20.7

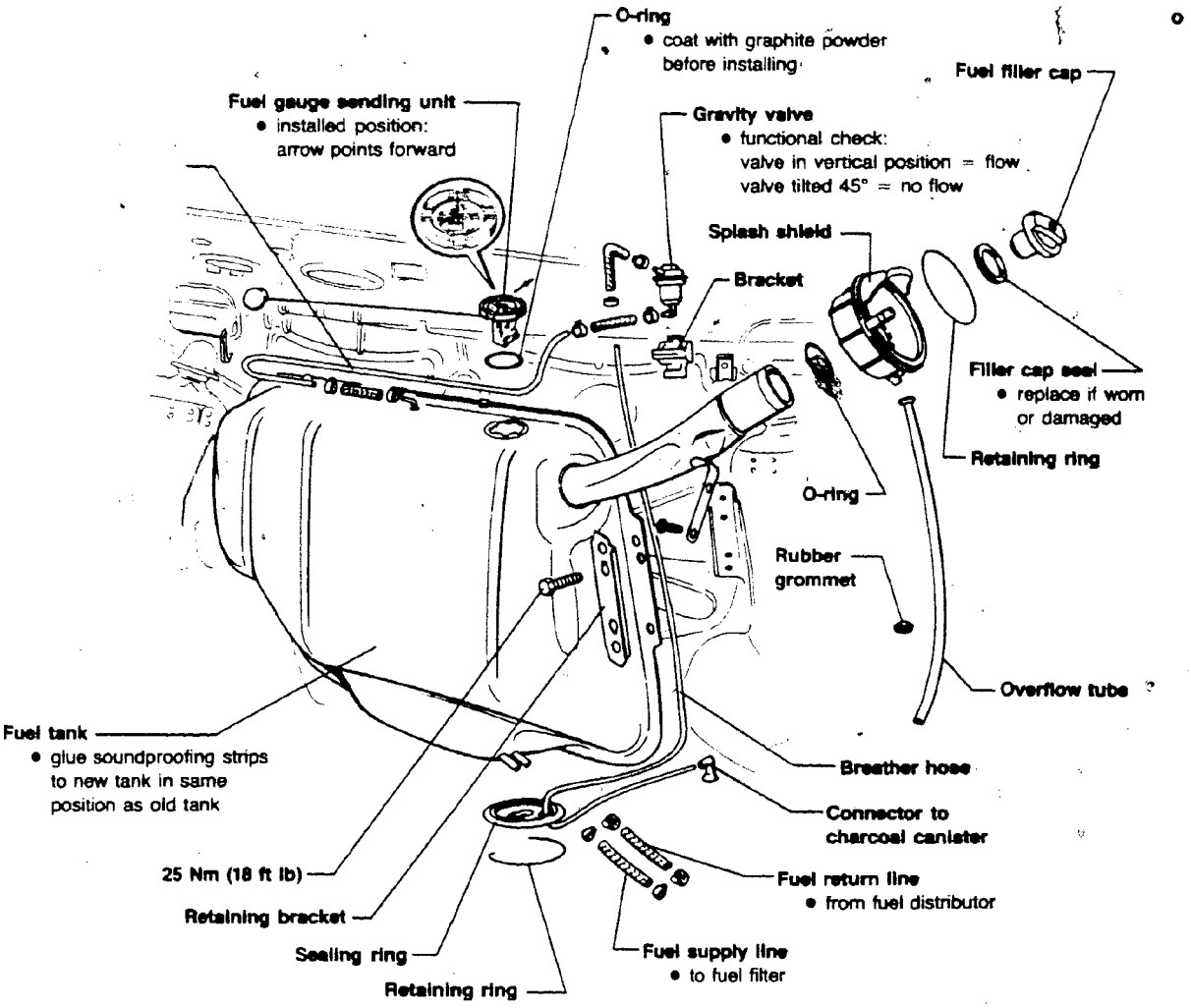

cardiagn.com

WARNING

Fire hazard. Do not smoke or have anything in area that can ignite fuel.

Note

- always replace all seals and clamps
- always observe rules of cleanliness — page 20.7

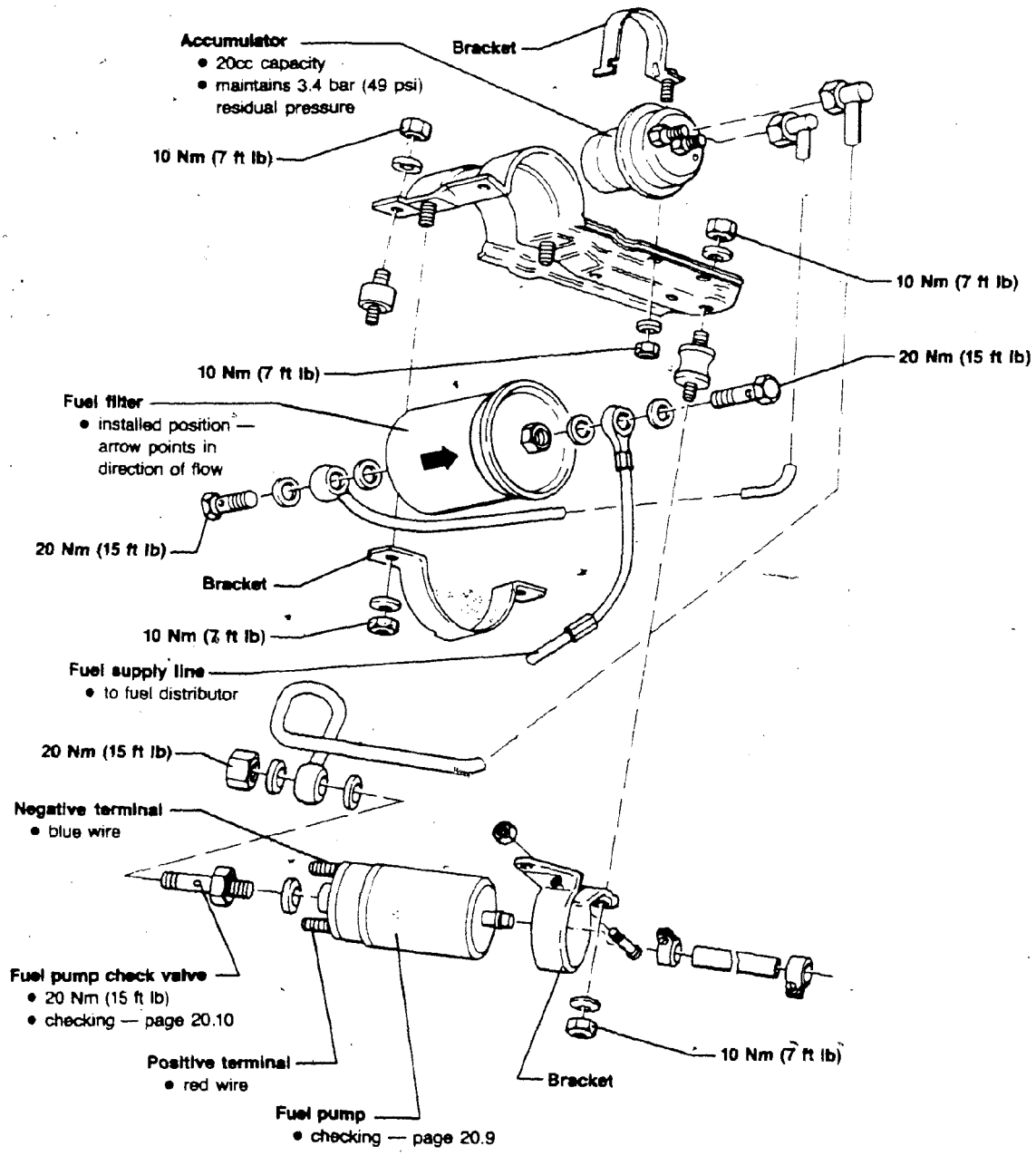

20-555

cardiagn.com

WARNING

Fire hazard. Do not smoke or have anything in area that can ignite fuel.

Note

- always replace all seals and clamps
- always observe rules of cleanliness — page 20.7

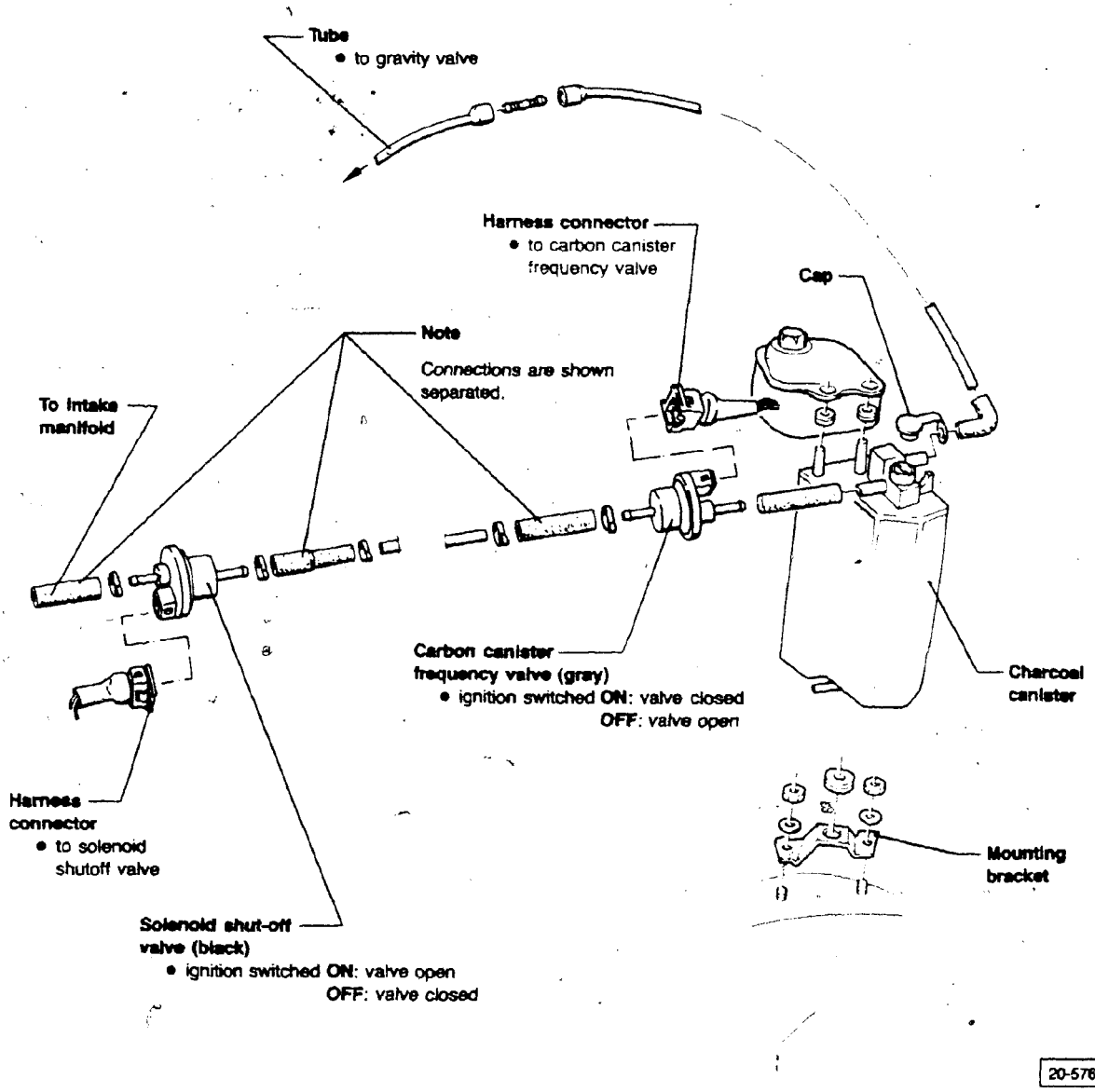

cardiagn.com

Carbon canister

Frequency valve, checking

- remove hose to activated charcoal canister from valve
- start engine and let idle

If coolant temperature under 60°C (140°F):

- valve must not operate
  - there must be no, or very little vacuum to the connection

If coolant temperature over 60° (140°F):

- valve must cycle
  - valve operates for 120 seconds with very noticeable vacuum to connection

Then
  - valve **STOPS** operating for 90 seconds with no or very little vacuum to the connection

Note

If the frequency valve is operating properly it will repeat this pattern of 120 seconds **ON** and 90 seconds **OFF** for as long as the engine is running.

cardiagn.com

WARNING

Fire hazard. Do not smoke or have anything in area that can ignite fuel.

Note

- always replace all seals and clamps
- always observe rules of cleanliness — page 20-7

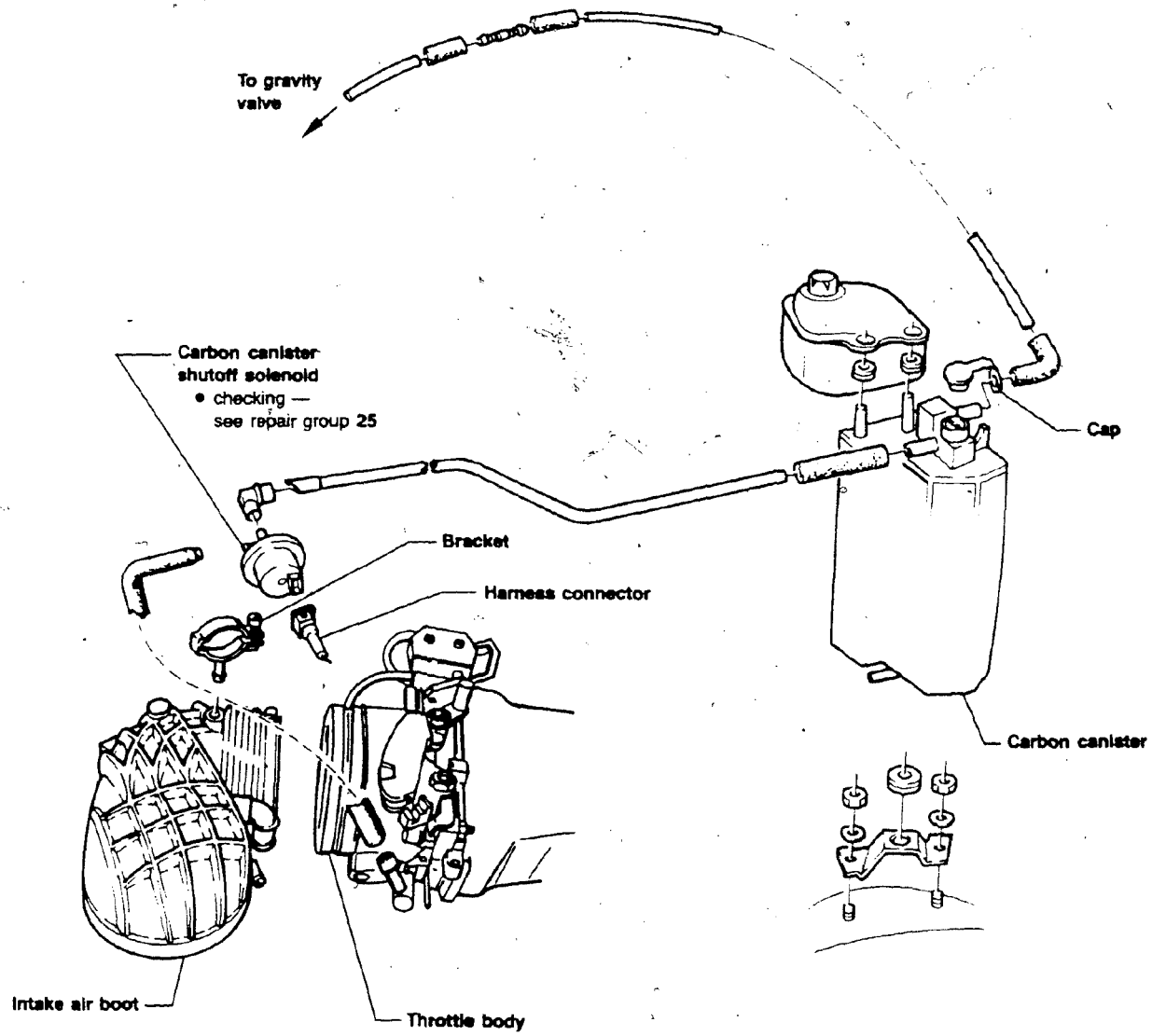

cardiagn.com

CAUTION

First:

- clean connecting points before loosening

When fuel system is open

- do not use compressed air if you don't need it
- move vehicle only if you must
- if you cannot finish repairs, carefully cover parts with plastic or paper — not with rags

Use clean parts only

- do not unwrap new parts before needed
- only use new parts, not loose or unwrapped parts from tool box
- lay removed parts on clean surface. Cover with plastic or paper — not with rags

Rules of cleanliness

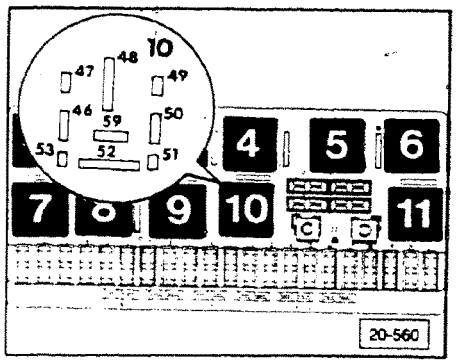

Connecting remote control US 4480/3

- remove fuel pump relay from position **10** on the fuse/relay panel

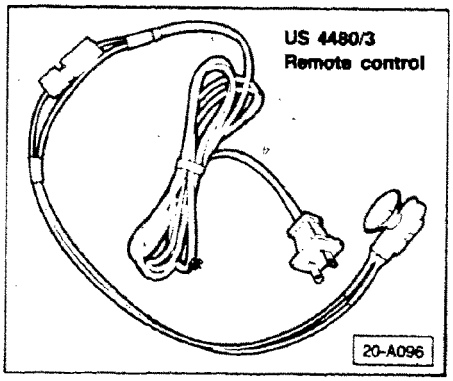

- switch **US 4480/3** remote control to **OFF** position
- plug **US 4480/3** remote control into socket **10** of fuse/relay panel

cardiagn.com

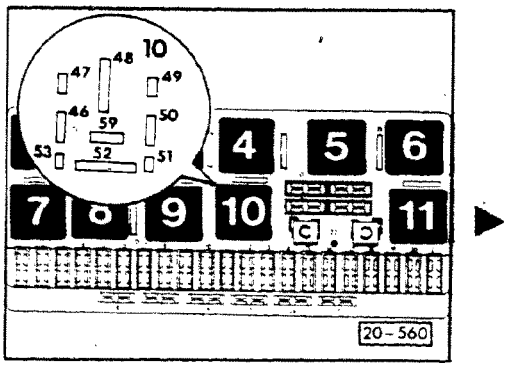

Fuel pump relay, checking

Symptom: pump is not switched ON (not audible) while starting

- remove cover from fuse relay box
- remove fuel pump relay from location number **10**
- connect **US 1115** LED tester between terminals **48** and ground, between terminals **46** and ground
- switch **ON** ignition
  - **US 1115** LED tester must light up
- switch ignition **OFF**

If **NO**
- locate and repair break in wiring using wiring diagram
- connect **US 1115** LED tester between terminals **46** and **47**
- switch ignition **ON**
  - LED must light up for about one second

If **NO**
- * perform vehicle self diagnosis

  or
- locate open or disconnected wire to ignition control unit,** repair as necessary

If **NO** break or disconnection
- replace control unit

If **NO** defect found
- replace fuel pump relay

* 4-cylinder **ONLY**

** If 4-cylinder; this refers to the Motronic control unit

cardiagn.com

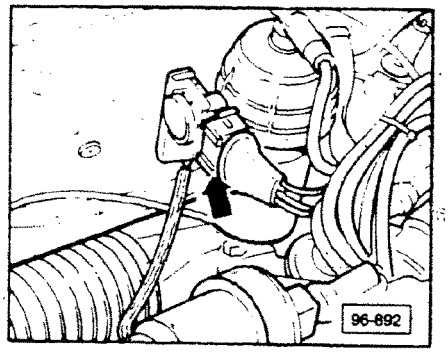

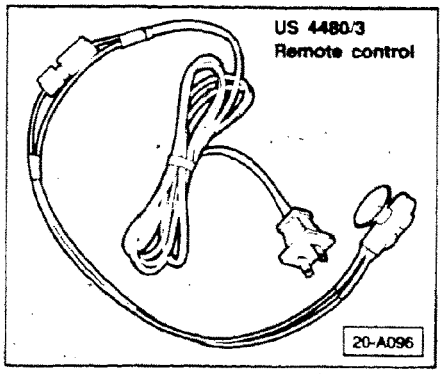

Fuel pump, checking

Requirements

- Fuse number **13 OK**
- *Fuse number **24 OK** (in the additional fuse box)
- Harness connector for the power output stage of the ignition coil, disconnected (**arrow**)

■ operate starter briefly
- fuel pump must run audibly

If **NO**
■ connect remote control **US 4480/3** (page 20.7)
■ activate remote control switch

If fuel pump runs
■ check fuel pump relay page 20.8

If fuel pump does **NOT** run
■ check voltage supply at fuel pump electrical connections using **US 1115** LED tester

Checking supply voltage

■ disconnect terminal at fuel pump and connect **US 1115** LED tester
■ activate remote control switch
- **US 1115** LED tester must light up

If **NO**
■ locate and repair break in wiring using wiring diagram

If voltage supply **OK**
■ replace fuel pump

* 5-cylinder **ONLY**

cardiagn.com

WARNING

Fire hazard. Do not smoke or have anything in area that can ignite fuel.

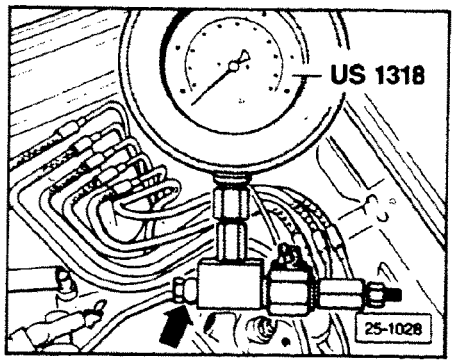

Fuel pump check valve, checking

Note

Performing this check will simultaneously check connections from the fuel pump to the fuel distributor test connection point.

Requirement

- Fuse number **13 OK**

▶ ■ connect **US 1318** pressure tester to the fuel pre-feed line (**arrow**)

Note

Shut off valve on **US 1318** must be in closed position (lever perpendicular to direction of flow)

- ■ remove fuel pump relay from fuse/relay box, location number **10**
- ■ connect remote control **US 4480/3**
- ■ activate remote control in intervals until a pressure of approximately 5 bar (73 psi) is built up

WARNING

Danger of fuel spray when opening shut off valve. Hold a cloth in front of the opening on the **US 1318**.

▶ **Note**

If gauge pressure indication exceeds 5 bar reduce the pressure by short, careful openings of the shut off valve.

- ■ record or note gauge pressure

Note

If after one minute the 5 bar (73 psi) pressure has not been achieved, either the fuel line connections are leaking or the fuel pump check valve is leaking, or both.

- ■ observe pressure drop:
  - 4-cylinder specification: pressure must **NOT** drop below 2.6 bar (38 psi) after 10 minutes
  - 5-cylinder specification: pressure must **NOT** drop below 3.4 bar (49 psi) after 10 minutes

If pressure drops below specification

- ■ check fuel line connections for leakage or replace fuel pump check valve

cardiagn.com

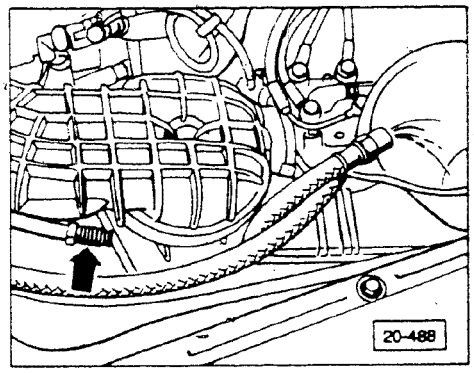

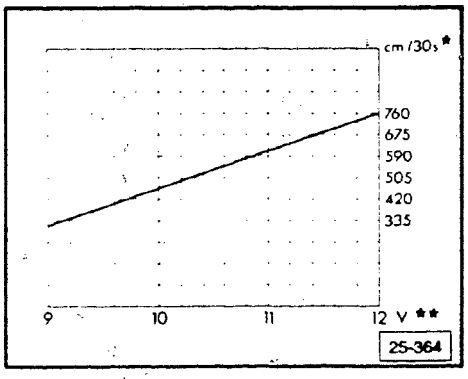

Note

The chart is expressed in units of cubic centimeters (cc's). It is also acceptable to substitute milliliters (ml) for cc's.

This will allow you to use containers calibrated in cc's or ml's with equal results.

- 1 milliliter = 1 cubic centimeter

Fuel pump delivery rate, checking

Requirements

- Free flow through fuel filter and associated fuel lines
- Voltage supply **OK** (checking page 20.9)
- Remote control **US 4480/3** connected (see page 20.6)

- remove fuel filler cap
- detach fuel return line at connection (**arrow**) and place into a measuring container (if necessary use an extension hose)

- activate remote control switch for 30 seconds
- using chart, compare amount of fuel delivered

If **NOT** within range specified on chart:
- check fuel filter for blockage, replace if necessary

If **OK**
- replace fuel pump
  - recheck delivery rate

If still **NOT OK** (low delivery)
- problem is not with fuel pump but probably a result of a restriction in the fuel circuit
- look for:
  - pinched lines or hoses
  - rust, scale, or foreign material lodged in the lines or connector orifices

- clean or repair as necessary until flow matches chart

* minimum delivered quantity in ccs per 30 seconds

** voltage at fuel pump with engine not running and pump on (using **US 4480/3**) with pump voltage approximately 2 volts less than battery voltage

cardiagn.com

CONTINUED IN THE

BEGINNING OF NEXT ROW

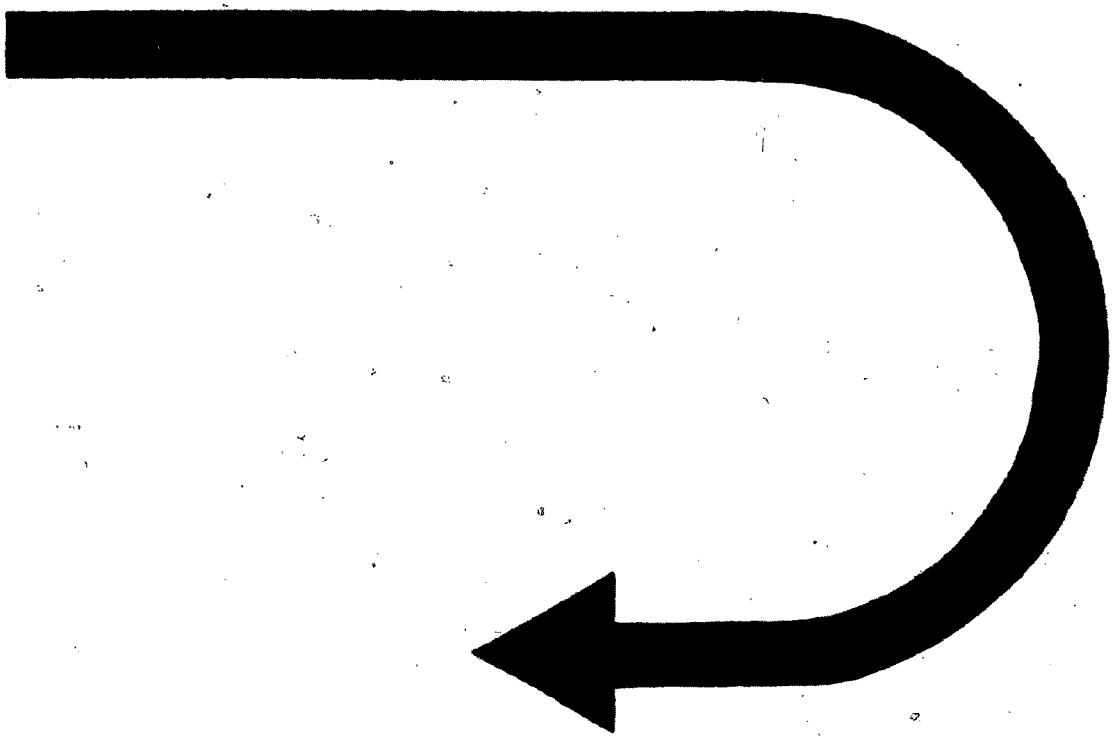

cardiagn.com

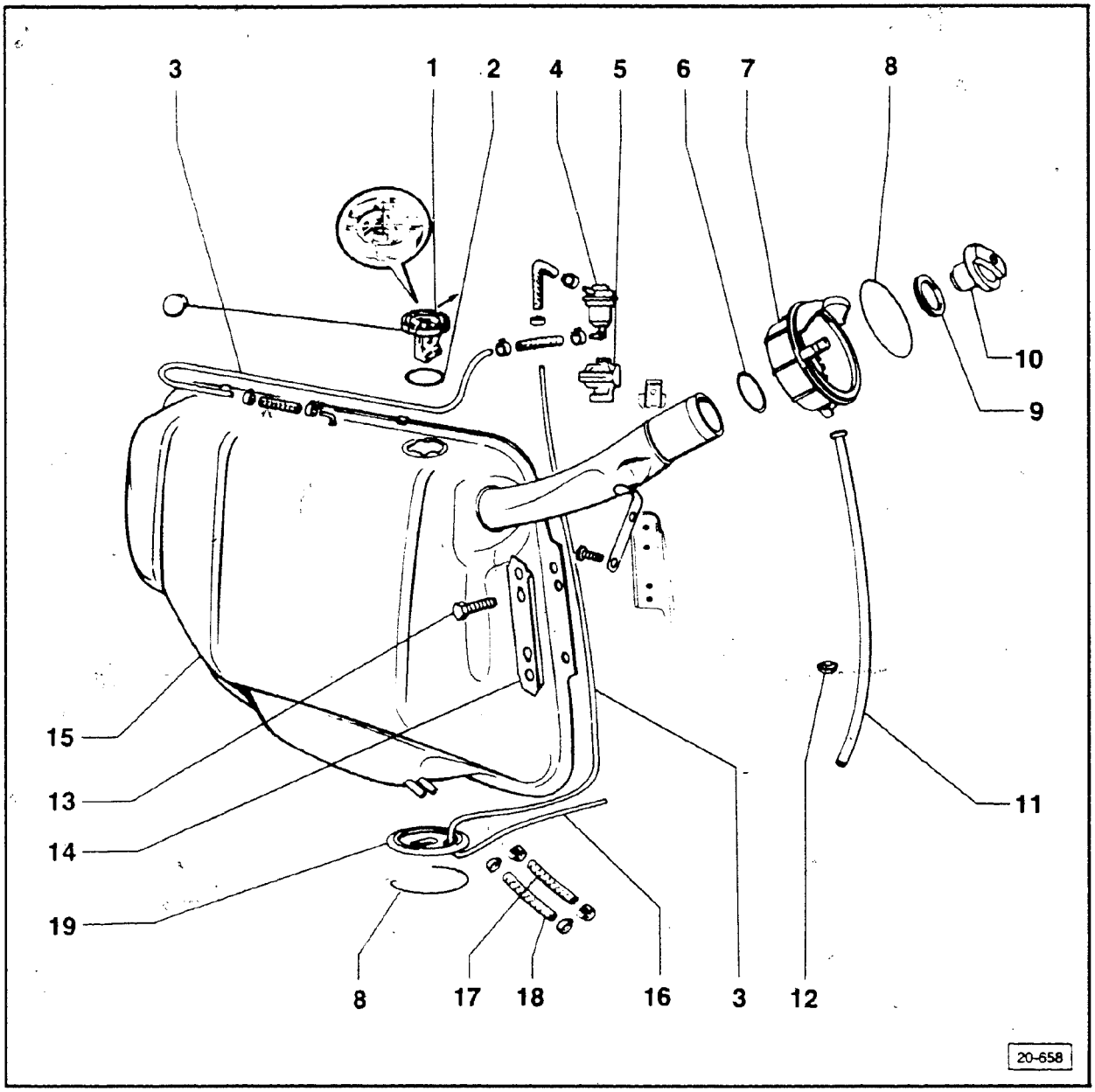

WARNING

Fire hazard. Do not smoke or have anything in area that can ignite fuel.

Note

- Always replace seals when installing new parts
- hose connections are secured with either screw-type or lock-type clamps, always replace lock-type clamps
- Follow Rules of Cleanliness, page 20.16
- Connect remote control, page 20.17

1 — **Fuel gauge sending unit**
removing:
- disconnect battery ground strap
- remove cover and harness connector from sending unit
- release bayonet lock on sender by turning unit with tool **VAG 2012 A**

Installation position:

- arrow points in driving direction

2 — **O-ring**
coat with oil before installing

3 — **Vent line**

cardiagn.com

4 — **Gravity/Vent valve**
removing:
- pull valve up and out of bracket
checking flow:
  - valve vertical — flow
    valve tipped 45° — **NO** flow

5 — **Bracket**

6 — **O-ring**

7 — **Splash shield**

8 — **Retaining ring**

9 — **Gasket**
replace

10 — **Fuel filler cap**

11 — **Overflow line**

12 — **Rubber grommet**

13 — **25 Nm (18 ft lb)**

14 — **Bracket**

15 — **Fuel tank**
removing, see page 20.23

16 — **Vent line**
to carbon canister

17 — **Return line**
from pressure regulator

18 — **Supply line**
to fuel rail

19 — **Dust seal**

cardiagn.com

Note

Always replace seals when installing components.

WARNING

Fire hazard. Do not smoke or have anything in area that can ignite fuel.

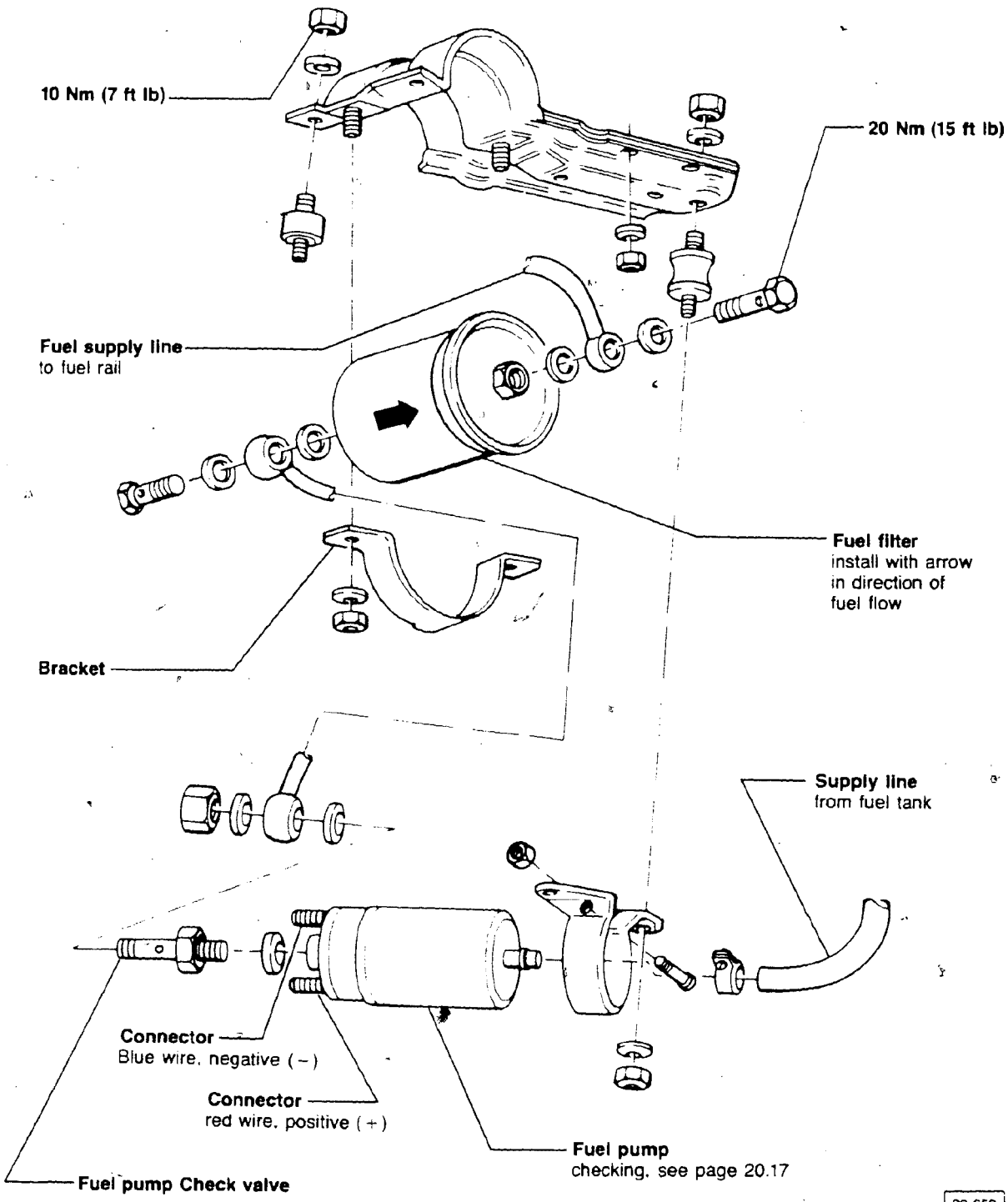

cardiagn.com

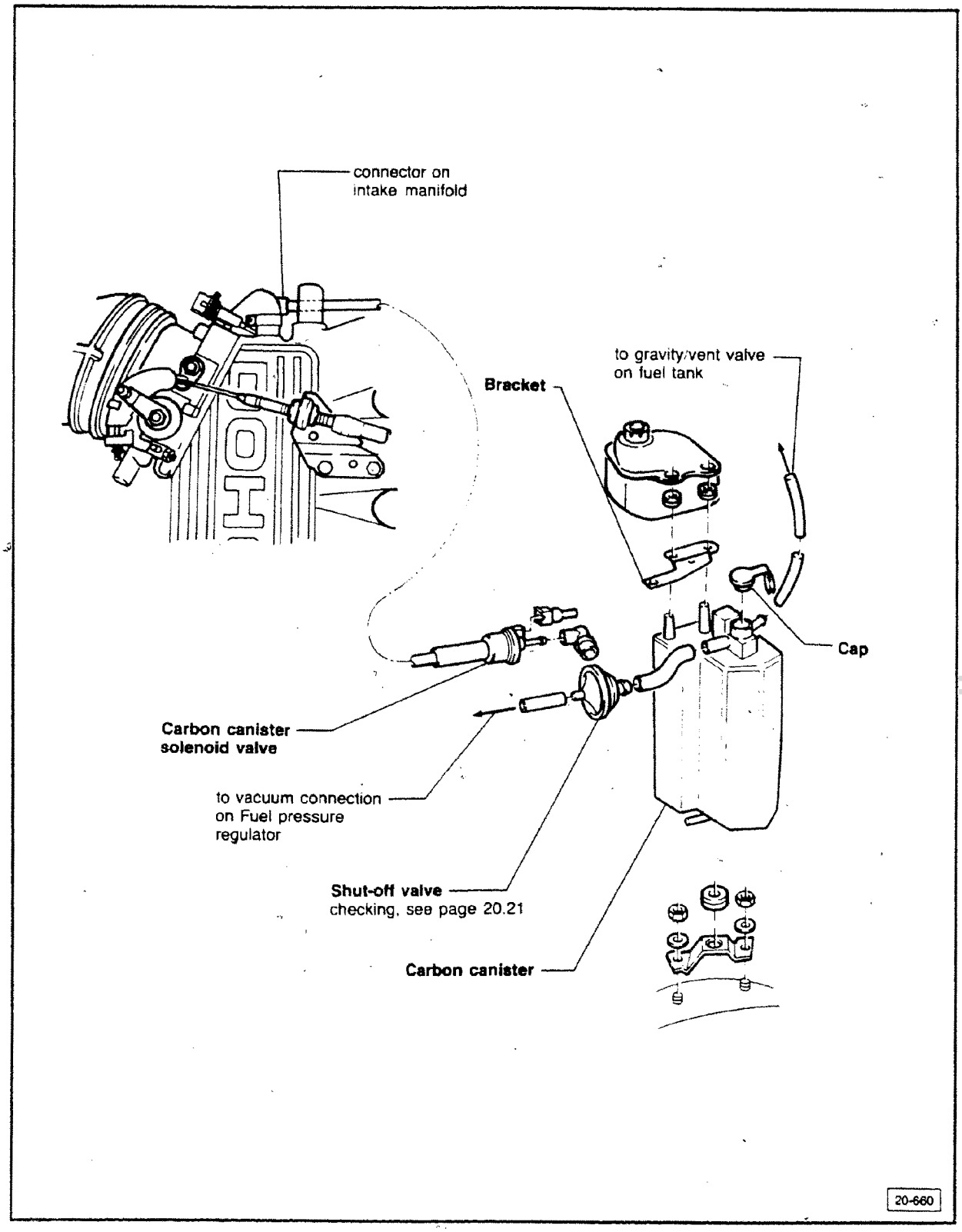

cardiagn.com

Rules of Cleanliness

CAUTION

When working on the fuel supply/ injection system, carefully observe the following rules:

1 — thoroughly clean connection and surrounding areas before loosening connection

2 — after removing components, place in clean area and cover with foil or paper. Avoid using rags

3 — components which have been opened or disassembled must be carefully covered or sealed if repair cannot be carried out immediately

4 — install clean parts only
- remove replacement parts from package just before installing
- do **NOT** use spare parts that were stored loose or unpackaged (e.g. in toolboxes, etc.)

5 — when fuel system is open:
- avoid using compressed air whenever possible
- avoid moving the vehicle whenever possible

cardiagn.com

Fuel pump, checking

Voltage supply, checking

Requirement
- fuse number 13 **OK**

- disconnect coil wire from ignition coil and connect to ground using jumper from **VAG 1594** adaptor set
- activate starter briefly
  - fuel pump must be audible (running) for a brief period

WARNING

Fire hazard. Do not smoke or have anything in area that can ignite fuel.

Note

If ambient noise levels are high in the vicinity of the vehicle being tested, it may require a second person to verify that the fuel pump is running.

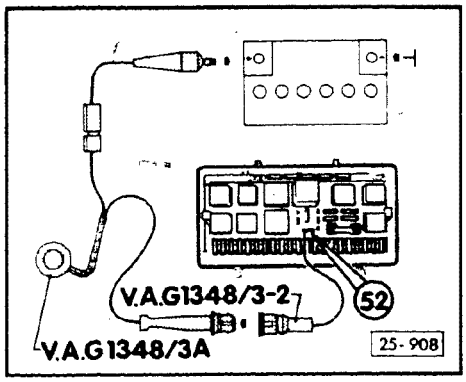

If fuel pump is **NOT** running
- remove fuel pump relay from fuse/relay panel location **10**

- connect remote control **VAG 1348/3A** to terminal **52** (of relay location **10**) and to battery positive using adaptor lead **VAG 1348/3-2**
- activate remote control

If fuel pump **RUNS**
- check fuel pump relay, see page 20.20

If fuel pump does **NOT** run
- disconnect fuel pump wires
- connect **US 1115** LED tester to fuel pump wires using adaptor set **VAG 1594**
- activate remote control
  - LED tester must light up

If **YES**
- replace fuel pump

If **NO**
- check wiring for open circuit using wiring diagram, replace or repair wiring as necessary

cardiagn.com

Fuel pump delivery rate, checking

Requirements
- free flow through fuel filter and associated fuel lines
- voltage supply **OK**
- remote control **US 1348/3A** connected, see page 20.20

WARNING

Fire hazard. Do not smoke or have anything in area that can ignite fuel.

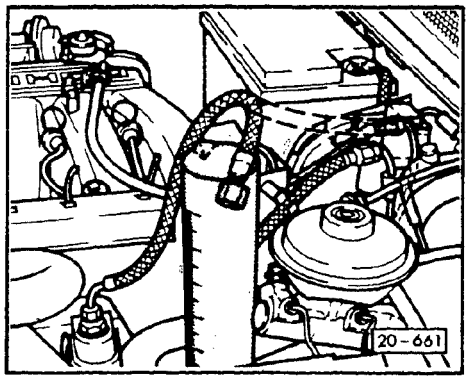

- remove fuel filler cap
- separate fuel return line at connector on plenum
- place fuel line into measuring container (attach an extension hose or tubing if necessary)
- activate remote control for 15 seconds

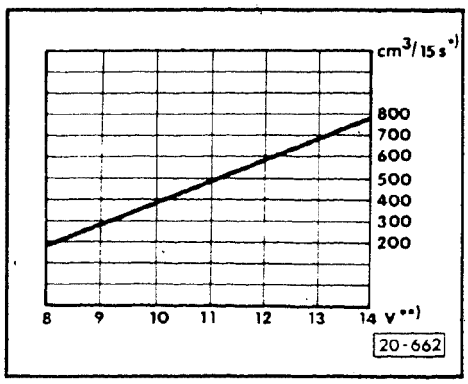

- using chart compare amount of fuel delivered

If **NOT** within range specified on chart
- check fuel filter for restriction, replace if necessary

If **NO** restriction
- trial replace fuel pump then recheck delivery rate

CAUTION

If trial replacements do **NOT** result in acceptable measurements, re-install the original component.

If still **NOT OK** (low delivery)
- problem is not with fuel pump but probably a result of a restriction in the fuel circuit
- look for
  - pinched lines or hoses
  - rust, scale or foreign material lodged in lines or connector orifices

Note

The chart is expressed in units of cubic centimeters (cc's). It is also acceptable to substitute milliliters (ml) for cc's.

This will allow you to use containers calibrated in cc's or ml's with equal results.

- 1 milliliter = 1 cubic centimeter

cardiagn.com

- clean or repair as necessary until flow matches chart
  - *) minimum delivery rate in cc's per 15 seconds
  - **) voltage at fuel pump with engine **NOT** running and pump turned **ON** (using remote control)

Note

Fuel pump voltage should be approximately 2 volts less than battery voltage.

cardiagn.com

Fuel pump relay, checking

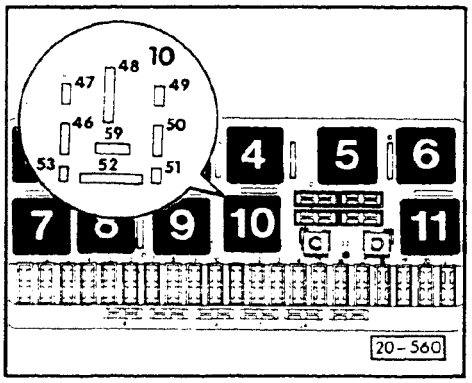

Requirement
- fuse number **13 OK**

- connect **US 1115** LED tester to fuse **13** and ground
- briefly energize starter
  - LED tester must light up and the fuel pump relay must pull up (listen for click or verify by touching)

If relay does **NOT** pull up
- check fuel pump relay control

If control is **OK**
- replace fuel pump relay

Fuel pump relay control, checking

- remove fuel pump relay from fuse relay panel, cavity **10**
- switch **ON** ignition
- switch **US 1119** multimeter to 20 volt range
- connect multimeter between terminal **46** and ground then terminal **48** and ground
  - each must be approximately 12 volts

If voltage value is **NOT** obtained
- eliminate open circuit in wiring using wiring diagram
- switch **OFF** ignition
- connect **US 1115** LED tester between terminals **46** and **47**
- switch **ON** ignition
  - LED tester must light up for approximately 1 second

If **NO**
- check wiring for open circuit using wiring diagram, repair as necessary

cardiagn.com

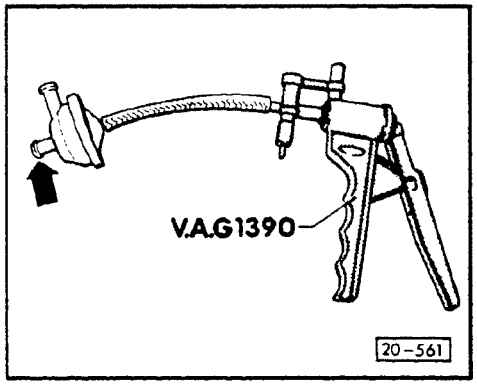

Carbon canister shut-off valve, checking

- install vacuum pump on small port
- blow into large port (**arrow**)
  - should be **NO** flow

If **FLOW**
- replace valve

If **NO** flow
- operate **US 1390** vacuum pump
  - valve must open (flow)

If **NO** flow
- replace valve

Fuel pump check valve, checking

Requirement
- fuse **13 OK**

> **WARNING**
>
> Fire hazard. Do not smoke or have anything in area that can ignite fuel.

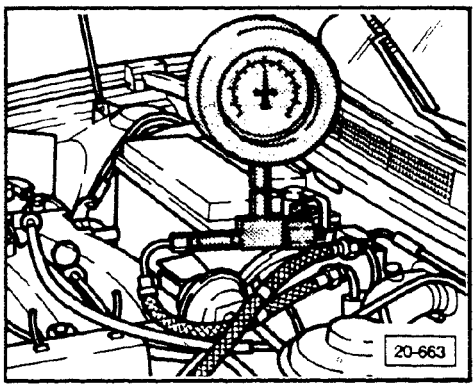

Note

Performing this check will simultaneously check connections from the fuel pump to the test connection point on the **VAG 1318** tester.

- connect **VAG 1318** tester to fuel supply line
- **OPEN** shut-off valve on **VAG 1318** tester (lever parallel to direction of flow)

- remove fuel pump relay from location **10** of fuse/relay panel

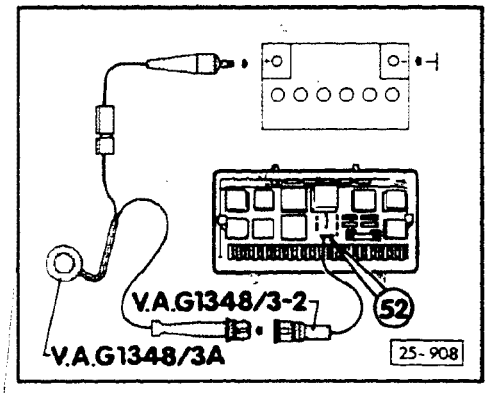

- connect remote control **VAG 1348/3A** to terminal **52** (of relay location **10**) and to battery positive using **VAG 1348/32** adaptor
- briefly actuate remote control until fuel begins to flow
- close shut-off valve on **VAG 1318** tester (lever perpendicular to direction of flow)
- activate remote control in intervals until pressure of approximately 5 bar (73 psi) is established
- note or record gauge pressure at this time

more

cardiagn.com

Note

If gauge pressure indication exceeds 5 bar, reduce the pressure by briefly and carefully opening the **VAG 1318** shut-off valve.

> **WARNING**
>
> Danger of fuel spray when opening shut-off valve. Hold a cloth in front of the opening on the **VAG 1318** tester.

> **WARNING**
>
> Fire hazard. Do not smoke or have anything in area that can ignite fuel.

If gauge does **NOT** reach 5 bar after approximately 10 seconds of remote control operation

- examine fuel lines for leakage, replace or repair as necessary, repeat check

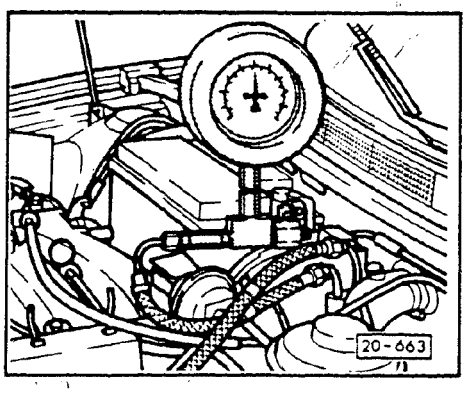

After 10 minutes

- observe pressure reading on **VAG 1318**
  - must **NOT** be less than 3.4 bar (49 psi)

If **YES**

- check fuel line connections for leakage, replace or repair as necessary

If **NO** leakage

- replace fuel pump check valve

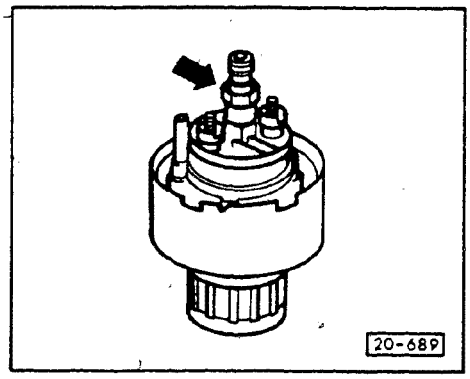

Fuel pump check valve, replacing

- remove check valve from fuel pump housing
- replace check valve and install new seal
  - tighten to 20 Nm (15 ft lb)

> **CAUTION**
>
> Do **NOT** clamp fuel pump in a vise.

cardiagn.com

Fuel tank, removing/installing

Emptying fuel tank

- disconnect fuel supply line in engine compartment
- extend length of supply line by attaching a section of extension hose
- insert extension hose into a suitable container to temporarily store fuel

WARNING

Fire hazard. Do not smoke or have anything in area that can ignite fuel.

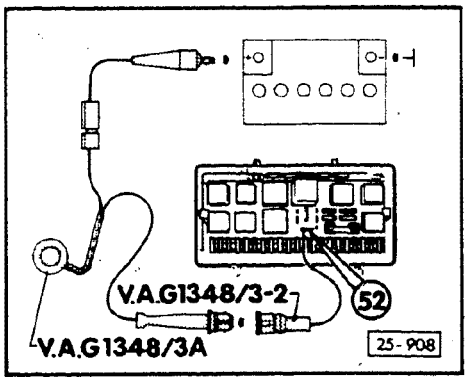

- remove fuel pump relay from location **10** of fuse/relay panel
- connect remote control **VAG 1348/3A** to terminal **52** (of relay location **10**) and to battery positive using adaptor lead **VAG 1348/3-2**

- operate remote control until fuel tank is empty

CAUTION

Do **NOT** overfill collecting container.

Removing

- disconnect battery ground strap
- empty fuel tank
- loosen rubber boot and overflow line from body

- remove trunk panel
- remove harness connector from sending unit
- remove vent line from fuel line

- remove supply and return lines
- loosen dust seal and vent line from body
- loosen fuel tank from body and lift out

- install sound deadening strips on new tank in same position as old tank

cardiagn.com

Note

Attach sound proofing strips and fuel line attachments on new fuel tank in same position as original tank.

Installing

- installation is reverse sequence of removal procedures

cardiagn.com

CONTINUED IN THE

BEGINNING OF NEXT ROW

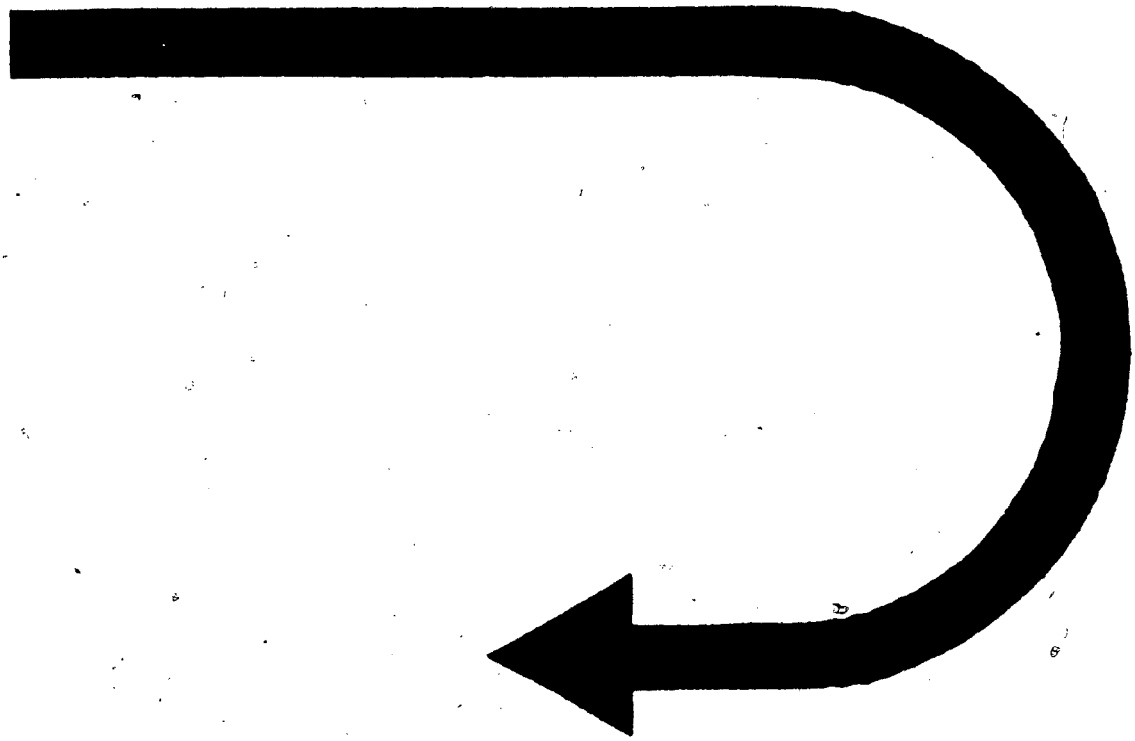

cardiagn.com

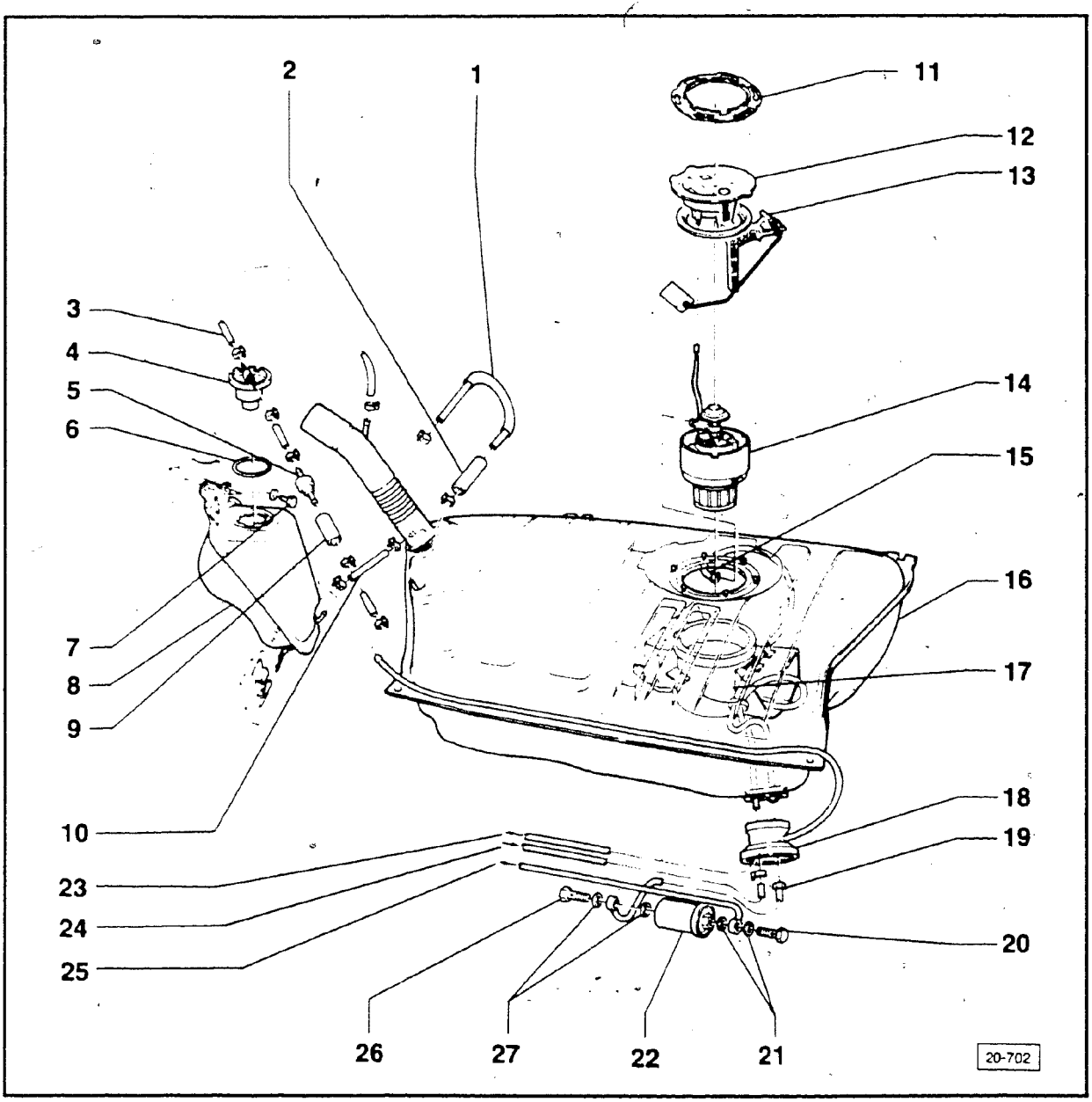

1 — **Vent line**

2 — **Foam tube**

3 — **Vent line**

4 — **Float valve**

5 — **Pressure regulating valve**

6 — **O-ring**
Replace
Coat with oil before installing

7 — **5 Nm (44 in lb)**

8 — **Expansion tank**

9 — **Foam tube**

10 — **Vent line**

11 — **Lock ring**

12 — **Fuel gauge sending unit**
Removing/installing see page 20.32

13 — **Gasket**
Replace

14 — **Fuel pump**
Removing/installing page 20.30
Checking page 20.28
Delivery rate, checking page 20.35
Disassembling/assembling page 20.27

cardiagn.com

15 — **Fuel supply line connection**
20 Nm (15 ft lb)

16 — **Fuel tank**
Removing/installing page 20.37

17 — **Baffle**

18 — **Grommet**

19 — **Fuel supply line connection**
20 Nm (15 ft lb)

20 — **Banjo bolt**
20 Nm (15 ft lb)

21 — **Seal**
Replace

22 — **Fuel filter**
Install with flow in direction of **arrow**

23 — **Vent line**
to charcoal canister on **7A** engine

24 — **Fuel return line**
from pressure regulator

25 — **Fuel supply line**
to fuel line at engine

26 — **Banjo bolt**
20 Nm (15 ft lb)

27 — **Seal**
Replace

cardiagn.com

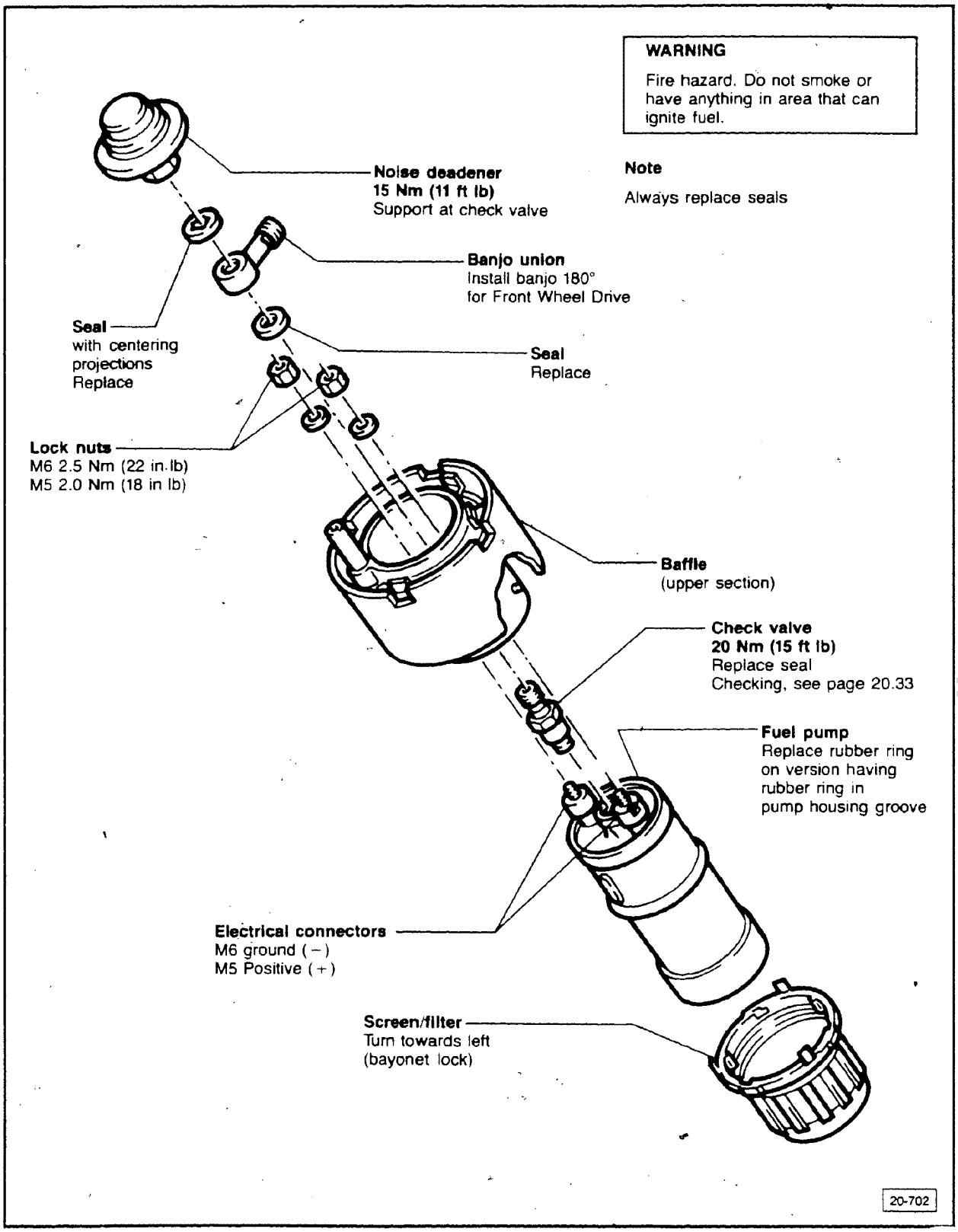

cardiagn.com

Fuel pump, checking

Voltage supply, checking

Requirement
- Fuse number **13 OK**

> **WARNING**
>
> Fire hazard. Do not smoke or have anything in area that can ignite fuel.

- disconnect coil wire from ignition coil and connect to ground using jumper from **VAG 1594** adaptor set
- activate starter briefly
  - fuel pump must be audible (running) for a brief period

Note

If ambient noise levels are high in the vicinity of the vehicle being tested, it may require a second person to verify that the fuel pump is running.

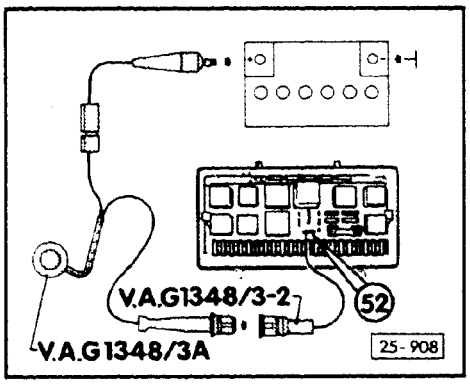

If fuel pump is **NOT** running
- remove fuel pump relay from fuse/relay panel location **10**
- connect remote control **VAG 1348/3A** to terminal **52** (of relay location **10**) and to battery positive using adaptor lead **VAG 1348/3-2**
- activate remote control

If fuel pump **RUNS**
- check fuel pump relay control, see page 20.31

If fuel pump does **NOT** run
- remove trunk floor panel
- remove fuel tank cover
- remove fuel gauge sender harness connector

more

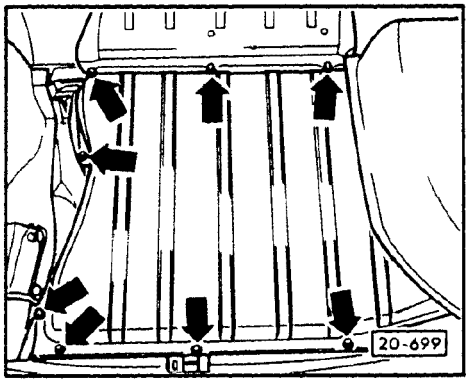

cardiagn.com

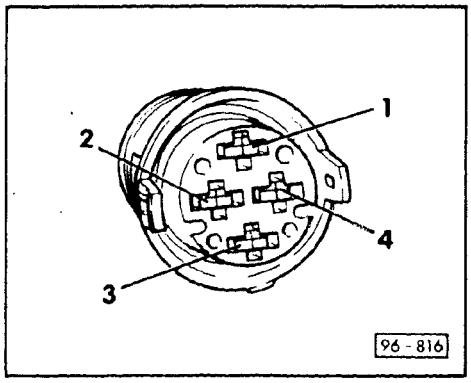

- connect LED tester **US 1115** to terminals **1** and **4** of harness connector using adaptor set **VAG 1594**
- operate remote control
  - LED tester must light up

WARNING

Fire hazard. Do not smoke or have anything in area that can ignite fuel.

If **NO**
- check wiring for open circuit using wiring diagram

If **YES**
- remove fuel gauge sender unit
- empty fuel tank as much as necessary, see page 20.37
- switch multimeter **US 1119** to resistance range
- check continuity of wires between sensor housing and fuel pump

If continuity is **NOT** obtained
- check wiring for open circuit using wiring diagram, repair as necessary

If continuity **IS** obtained
- replace fuel pump

cardiagn.com

Fuel pump, removing/installing

Removing

- remove fuel gauge sending unit, page 20.32
- remove fuel supply line on fuel pump (support on banjo connection)

WARNING

Fire hazard. Do not smoke or have anything in area that can ignite fuel.

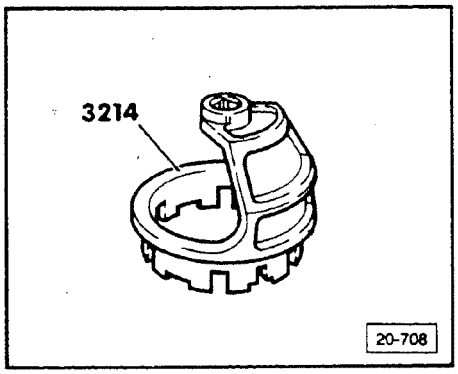

- turn outer circumference of pump housing approximately 15mm to the left using tool **VAG 3214**
- pull up pump to remove

Fuel pump, installing

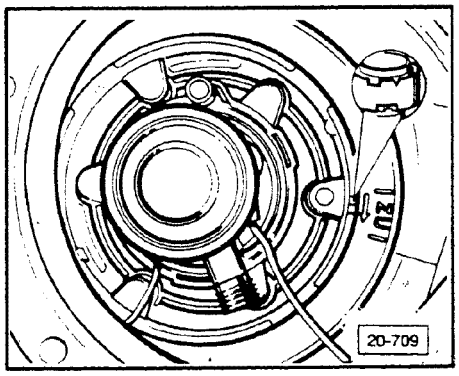

- vehicles with Front Wheel Drive install pump in baffle so that **single V** marking lines up with marking on baffle

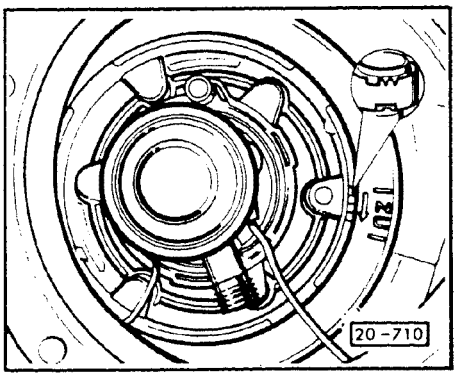

- vehicles with All Wheel Drive install pump in baffle so that **double V** marking lines up with marking on baffle
- turn pump housing (outer circumference) approximately 15mm to right (lock) using **VAG 3214**

cardiagn.com

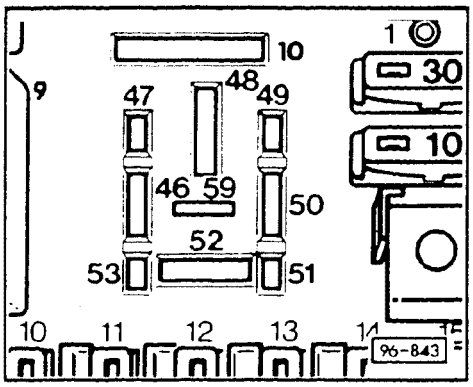

Fuel pump relay control, checking

- remove fuel pump relay from fuse relay panel, cavity **10**
- switch **ON** ignition

- switch **US 1119** multimeter to 20 volt range
- connect multimeter between terminal **46** and ground then terminal **48** and ground
  - each must be approximately 12 volts

If voltage value is **NOT** obtained
- eliminate open circuit in wiring using wiring diagram

- switch **OFF** ignition
- connect **US 1115** LED tester between terminals **46** and **47**
- switch **ON** ignition
  - LED tester must light up for approximately 1 second

If **YES**
- replace fuel pump relay

If **NO**, check wiring as follows
- expose MPI control unit by removing foot well cover beneath glove box
- remove control unit harness connector **A**

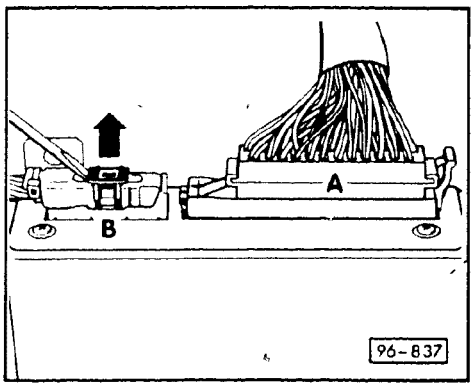

- switch multimeter **US 1119** to resistance range

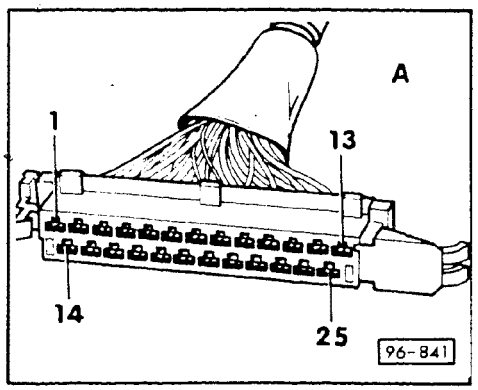

- check continuity between terminal **7** of control unit harness connector **A** and terminal **47** of relay cavity **10** on fuse relay panel
  - must be 0.0 to 0.8 ohms (continuity)

If continuity is **NOT** obtained from **BOTH** measurements
- eliminate open circuit in wiring using wiring diagram

If continuity **IS** obtained from **BOTH** measurements
- replace MPI control unit

cardiagn.com

Fuel gauge sending unit, removing/installing

Note

Fuel tank must be 3/4 full or less. Empty fuel tank as much as necessary, see page 20.37

WARNING

Fire hazard. Do not smoke or have anything in area that can ignite fuel.

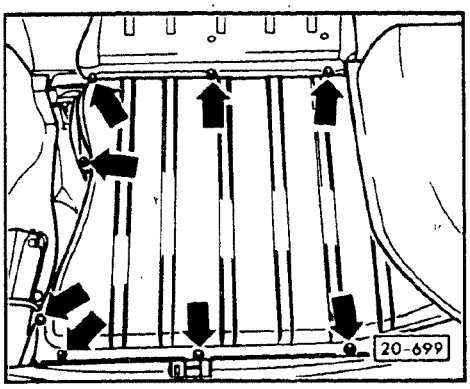

Removing

- remove trunk floor panel
- remove fuel tank cover
- disconnect battery ground strap

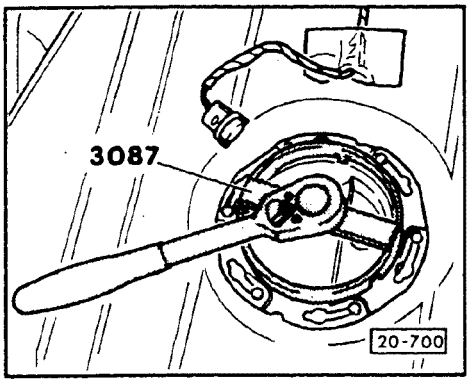

- remove harness connector from fuel gauge sending unit
- turn lock to left using tool **VAG 3087** and remove
- lift sending unit housing out of fuel tank and remove fuel pump harness connector
- remove fuel gauge sending unit

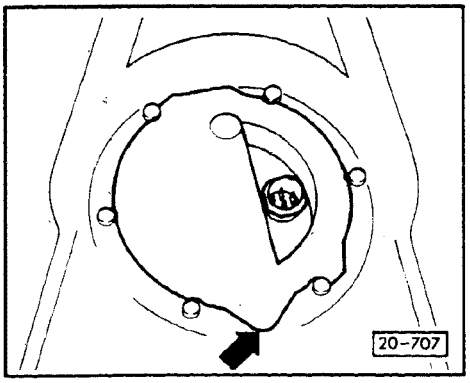

Installing

- install seal in opening
- connect fuel pump harness connector to fuel pump
- install fuel gauge sending unit with projection (**arrow**) pointing towards rear of tank
- carefully press down fuel gauge sending unit (against spring located in lower section of sender) until lock ring can be installed
- turn lock ring to right using tool **VAG 3087**

cardiagn.com

Fuel pump check valve, checking

Requirement
- Fuse **13 OK**

Note

Performing this check will simultaneously check connections from the fuel pump to the test connection point on the **VAG 1318** tester.

WARNING

Fire hazard. Do not smoke or have anything in area that can ignite fuel.

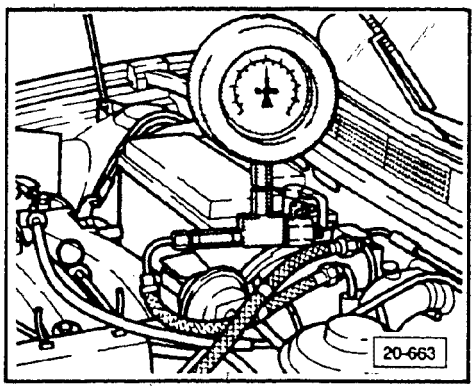

- connect **VAG 1318** tester to fuel supply line
- **OPEN** shut-off valve on **VAG 1318** tester (lever parallel to direction of flow)

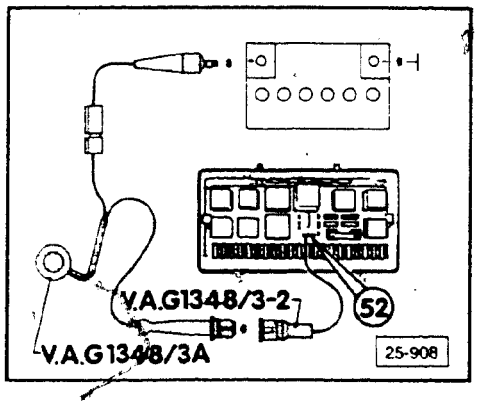

- remove fuel pump relay from location **10** of fuse/relay panel
- connect remote control **VAG 1348/3A** to terminal **52** (of relay location **10**) and to battery positive using **VAG 1348/3-2** adaptor
- briefly actuate remote control until fuel begins to flow
- close shut-off valve on **VAG 1318** tester (lever perpendicular to direction of flow)
- activate remote control in intervals until pressure of approximately 5 bar (73 psi) is established
- note or record gauge pressure at this time

more

cardiagn.com

Note

If gauge pressure indication exceeds 5 bar, reduce the pressure by briefly and carefully opening the **VAG 1318** shut-off valve.

> **WARNING**
>
> Danger of fuel spray when opening shut-off valve. Hold a cloth in front of the opening on the **VAG 1318** tester.

> **WARNING**
>
> Fire hazard. Do not smoke or have anything in area that can ignite fuel.

If gauge does **NOT** reach 5 bar after approximately 10 seconds of remote control operation

- examine fuel lines for leakage, replace or repair as necessary, repeat check

After 10 minutes

- observe pressure reading on **VAG 1318**
  - must **NOT** be less than 3.4 bar (49 psi)

If **YES**

- check fuel line connections for leakage, replace or repair as necessary

If **NO** leakage

- replace fuel pump check valve

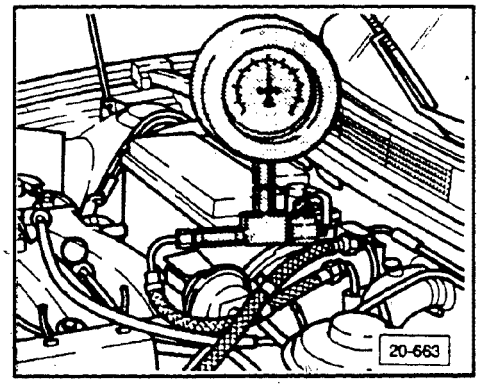

Fuel pump check valve, replacing

- remove check valve from fuel pump housing
- replace check valve and install new seal
  - tighten to 20 Nm (15 ft lb)

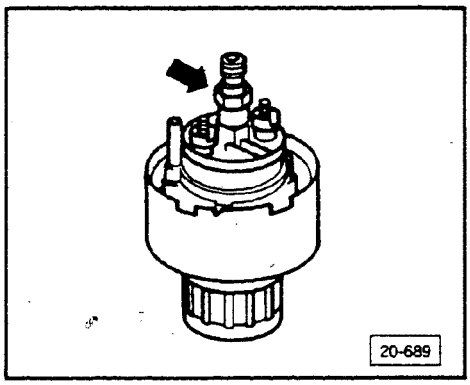

> **CAUTION**
>
> Do **NOT** clamp fuel pump in a vise.

cardiagn.com

Fuel pump delivery rate, checking

Requirements
- Free flow through fuel filter and associated fuel lines
- Voltage supply **OK**
- Remote control **US 1348/3A** connected, see page 20.28

WARNING

Fire hazard. Do not smoke or have anything in area that can ignite fuel.

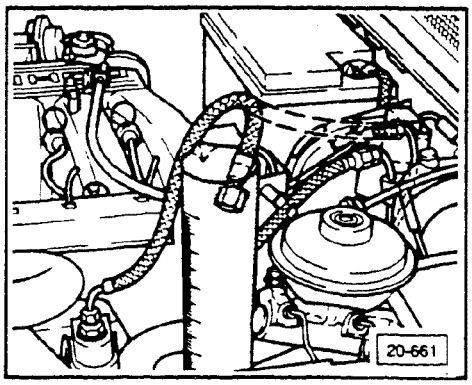

- remove fuel filler cap
- separate fuel return line at connector on plenum
- place fuel line into measuring container (attach an extension hose or tubing if necessary)
- activate remote control for 15 seconds

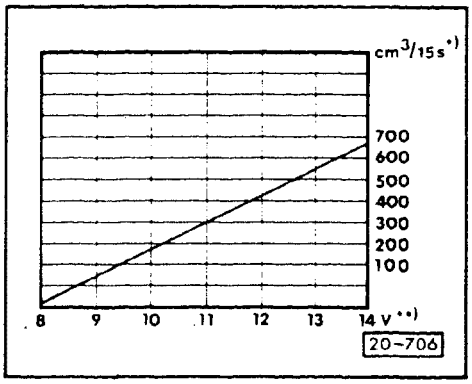

- using chart compare amount of fuel delivered

If **NOT** within range specified on chart
- check fuel filter for restriction, replace if necessary

If **NO** restriction
- trial replace fuel pump then recheck delivery rate

CAUTION

If trial replacements do **NOT** result in acceptable measurements, re-install the original component.

If still **NOT OK** (low delivery)
- problem is not with fuel pump but probably a result of a restriction in the fuel circuit
- look for
  - pinched lines or hoses
  - rust, scale or foreign material lodged in lines or connector orifices

Note

The chart is expressed in units of cubic centimeters (cc's). It is also acceptable to substitute milliliters (ml) for cc's.

This will allow you to use containers calibrated in cc's or ml's with equal results.

- 1 milliliter = 1 cubic centimeter

cardiagn.com

- clean or repair as necessary until flow matches chart

*) minimum delivery rate in cc's per 15 seconds

) voltage at fuel pump with engine **NOT running and pump turned **ON** (using remote control)

Note

Fuel pump voltage should be approximately 2 volts less than battery voltage.

cardiagn.com

Fuel tank, removing/installing

Emptying fuel tank

- disconnect fuel supply line in engine compartment
- extend length of supply line by attaching a section of extension hose
- insert extension hose into a suitable container to temporarily store fuel

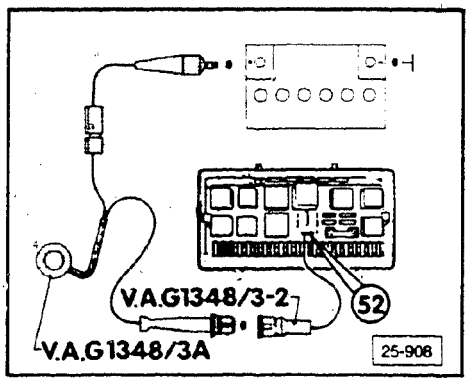

WARNING

Fire hazard. Do not smoke or have anything in area that can ignite fuel.

- remove fuel pump relay from location **10** of fuse/relay panel
- connect remote control **VAG 1348/3A** to terminal **52** (of relay location **10**) and to battery positive using adaptor lead **VAG 13483-2**
- operate remote control until fuel tank is empty

CAUTION

Do **NOT** overfill collecting container.

Removing

- disconnect battery ground strap
- loosen rubber grommet from floor panel
- remove wires from underside of fuel tank

- wipe up any residual fuel using rag
- remove filler cap
- loosen splash shield on filler neck from side panel

- remove trunk trim as necessary, see Group 70
- remove fuel tank cover
- vehicles with All Wheel Drive, remove expansion tank

- remove fuel tank mounting nuts (2 on front side of tank)
- remove fuel tank

cardiagn.com

Note

Attach sound proofing strips and line attachments on new fuel tank in same position as original tank.

Installing

- installation is reverse sequence of removal procedures

cardiagn.com

Index

Evaporative system leakage
- troubleshooting 26-40

4-cylinder

Exhaust system
- component layout 26-10-1

5-cylinder

EGR system (California ONLY)
- checking 26-30

Exhaust system
- component layout 26-10-2

Vacuum circuit
- connections layout 26-20-2

Coupe

Exhaust system
- component layout 26-10-3

Vacuum circuit
- connections layout 26-20-1

Quattro

Exhaust system
- component layout 26-10-4

20-valve

EGR system (California ONLY)
- checking 26-30-9

Exhaust system
- component layout 26-10-5

Vacuum circuit
- connections layout (49-state) 26-20-3
- connections layout (California) 26-20-4

cardiagn.com

Note

After working on the exhaust system, check that system is not preloaded and that there is sufficient clearance between the system and the body. If necessary, loosen the retaining clamps and adjust the muffler and exhaust pipe by turning and pushing in a longitudinal direction so that there is sufficient space and so mounting rings are equally loaded.

- always replace all self-locking nuts

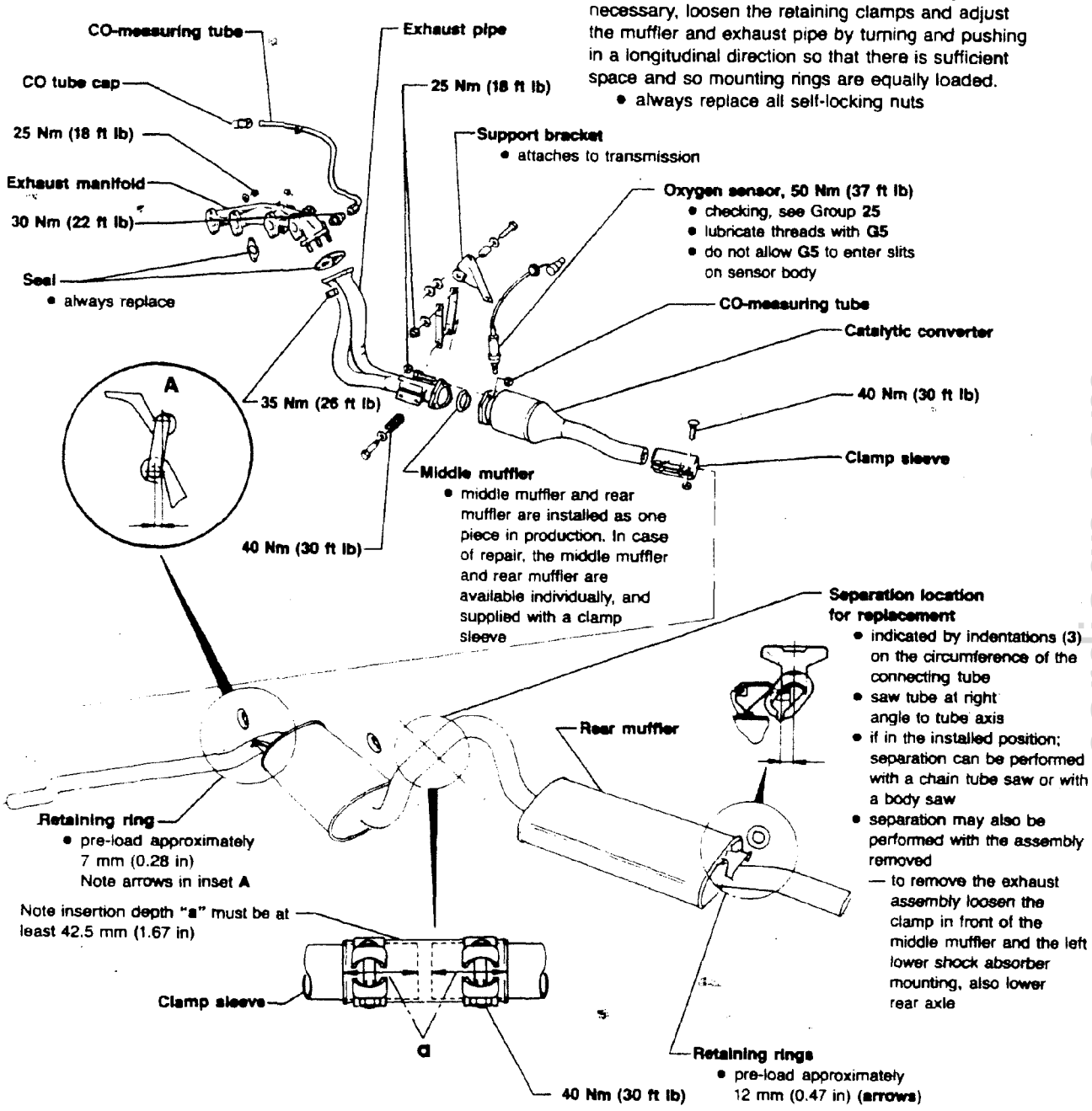

cardiagn.com

Note

After working on the exhaust system, check that system is not preloaded and that there is sufficient clearance between the system and the body. If necessary, loosen the retaining clamps and adjust the muffler and exhaust pipe by turning and pushing in a longitudinal direction so that there is sufficient space and so mounting rings are equally loaded. Always replace all self-locking nuts.

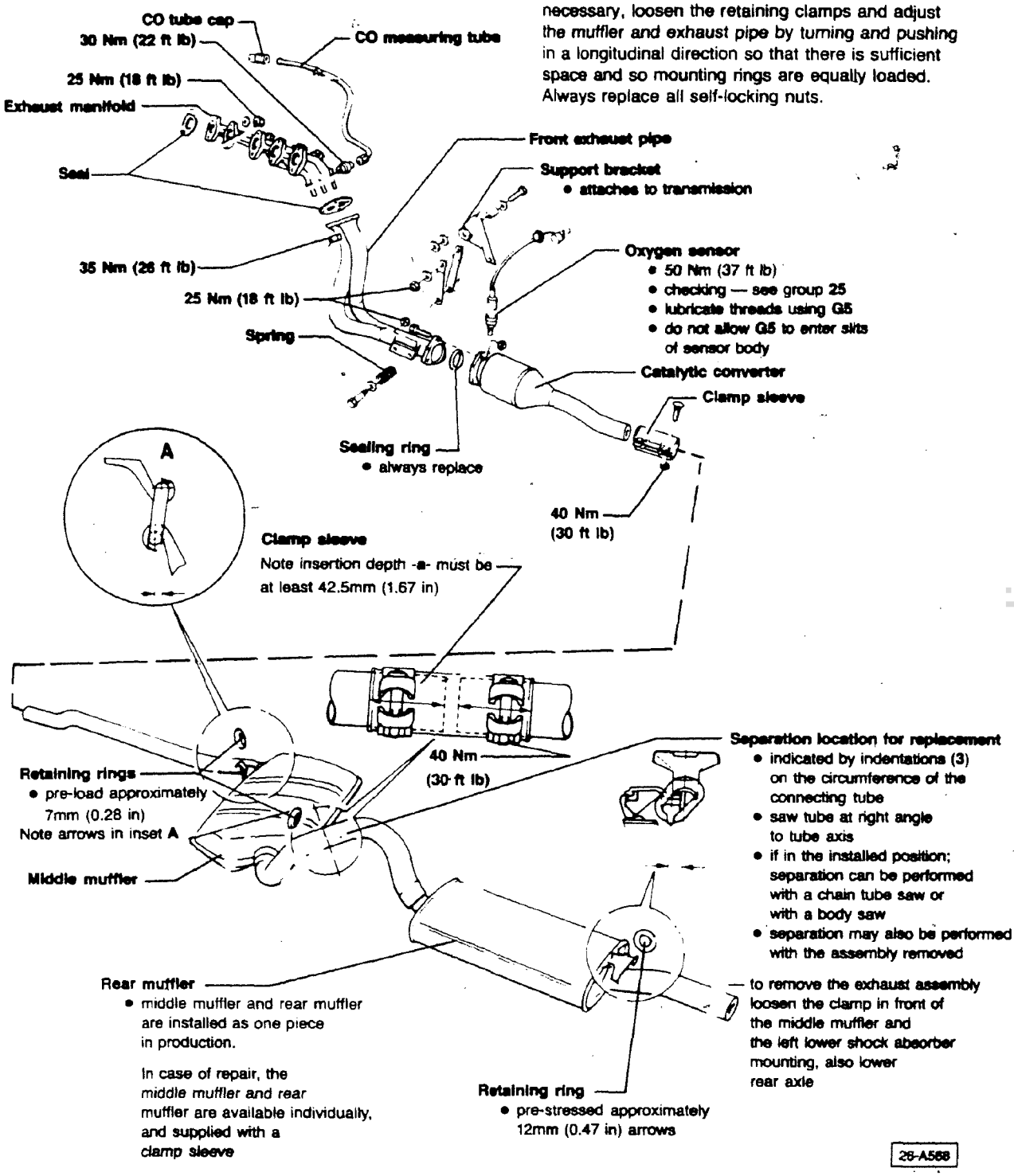

cardiagn.com

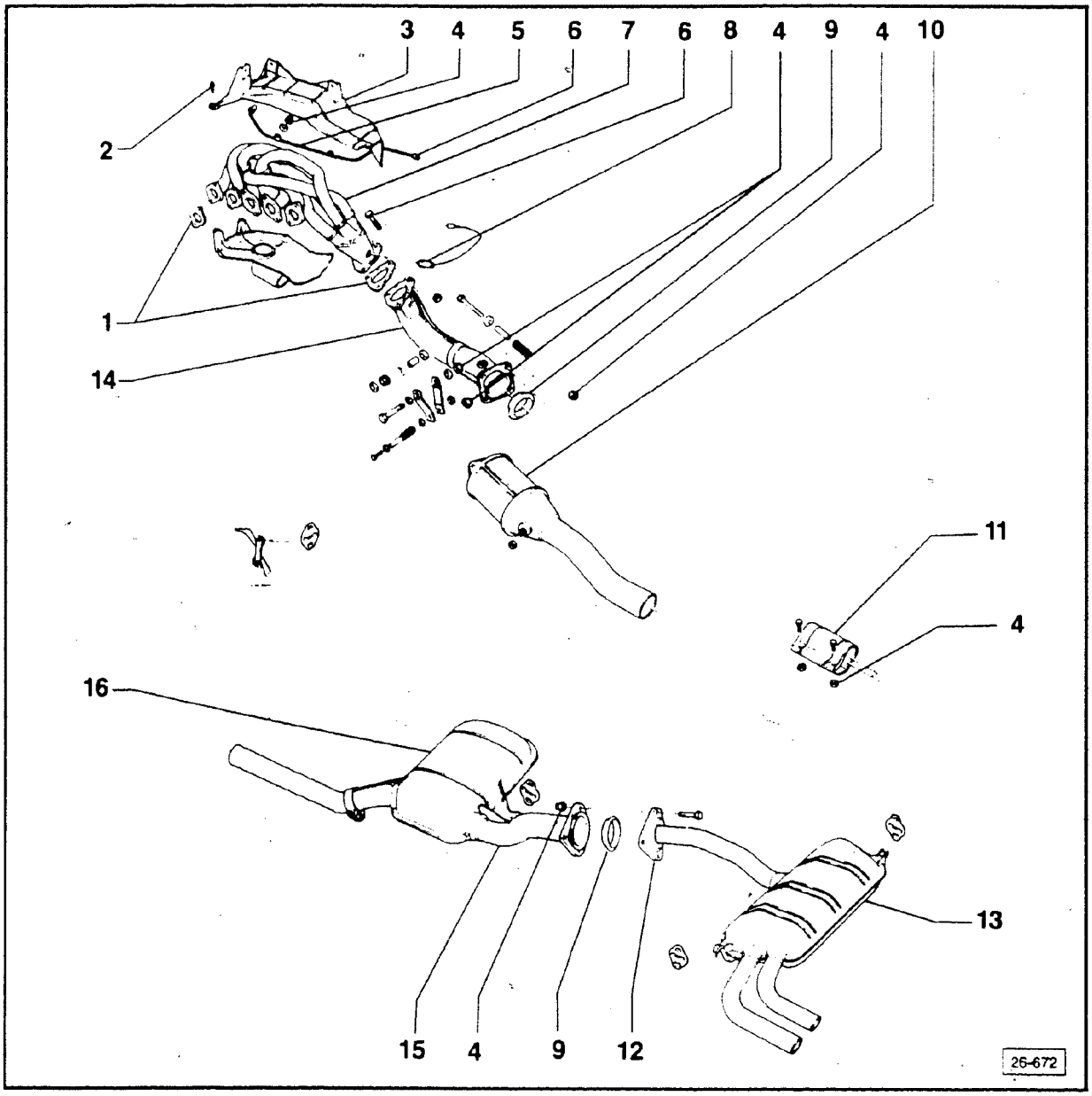

Note

After working on the exhaust system ensure that the system (cold) is not preloaded.
Check for sufficient clearance between the exhaust system and the chassis.
If necessary, loosen the appropriate clamps to allow the mufflers and pipes to be turned and pushed in a longitudinal direction until sufficient clearance is obtained.
The hanging load must be distributed equally over the entire set of retaining rings.
Always replace self locking nuts.

1 — **Gasket**
replace

2 — **10 Nm (7 ft lb)**

3 — **Heat shield**

4 — **25 Nm (18 ft lb)**

5 — **CO tap tube**

6 — **30 Nm (22 ft lb)**

7 — **Exhaust manifold**

8 — **Oxygen sensor**
50 Nm (37 ft lb)
checking, see Group 24

cardiagn.com

THIS FRAME INTENTIONALLY LEFT

BLANK

cardiagn.com

CAUTION

Threads of oxygen sensor are coated with anti-seize compound. Do not get compound into slots of sensor.

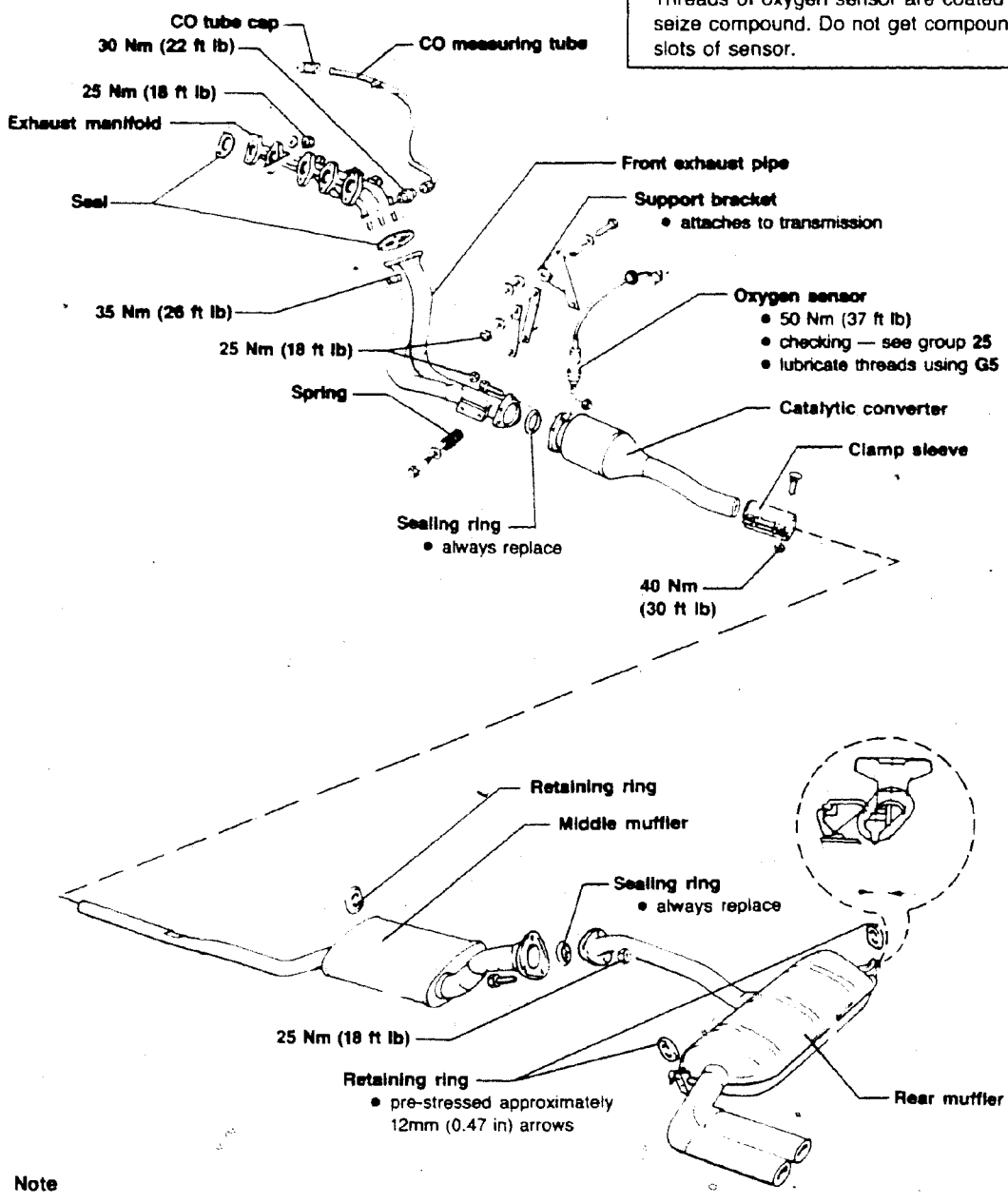

Note

After working on the exhaust system, check that system is not preloaded and that there is sufficient clearance between the system and the body. If necessary, loosen the retaining clamps and adjust the muffler and exhaust pipe by turning and pushing in a longitudinal direction so that there is sufficient space and so mounting rings are equally loaded. Always replace all self-locking nuts.

26-A568

cardiagn.com

9 — **O-ring**
replace

10 — **Catalytic converter**

11 — **Clamp sleeve**
push on front half up to stop
adjust initial stressing force
on the rear half

12 — **Retaining rings**
when replacing, be sure new
part matches the original

13 — **Rear muffler**

14 — **Front exhaust pipe**

15 — **Retaining rings**
when replacing, be sure new
part matches the original

16 — **Center muffler**

cardiagn.com

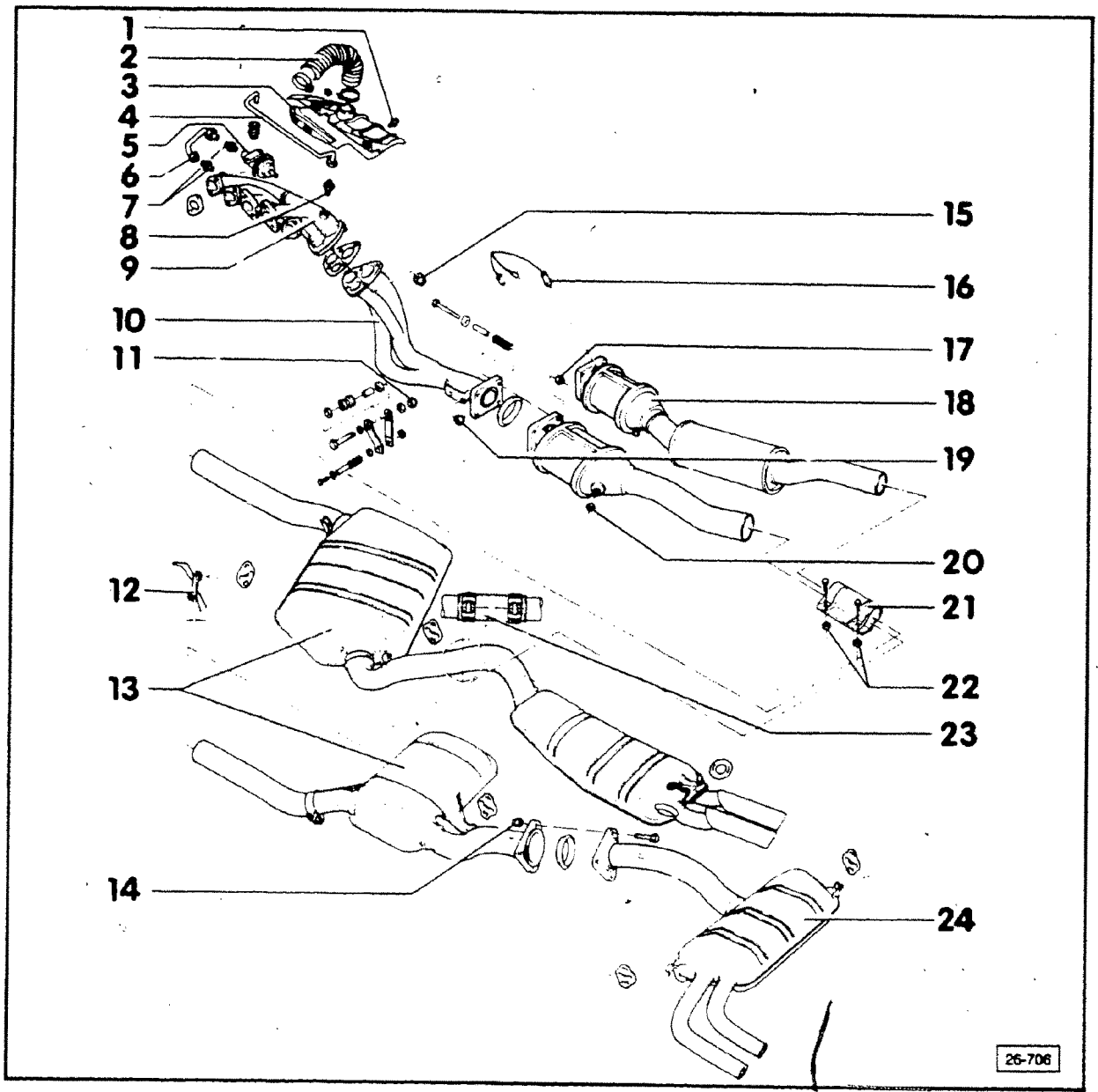

Note

- After working on the exhaust system ensure that the system (cold) is not preloaded.
- Check for sufficient clearance between the exhaust system and the chassis.
- If necessary, loosen the appropriate clamps to allow the mufflers and pipes to be turned and pushed in a longitudinal direction until sufficient clearance is obtained.
- The hanging load must be distributed equally over the entire set of retaining rings.
- Always replace self locking nuts.

1 — 20 Nm (15 ft lb)

2 — hose to intake air preheater stove

3 — Heat shield

4 — CO measuring tube

5 — EGR valve
- checking, page 26-30-9

6 — EGR vacuum line

7 — Banjo bolts
- **20 Nm (15 ft lb)**

8 — Banjo bolt
- **20 Nm (15 ft lb)**

cardiagn.com

9 — **Exhaust elbow**

10 — **Header pipe**

11 — **30 Nm (22 ft lb)**

12 — **Retaining ring**
- tension approximately 8 mm (arrow)

13 — **Resonator**

14 — **25 Nm (18 ft lb)**

15 — **30 Nm (22 ft lb)**

16 — **Oxygen sensor**
- **50 Nm (37 ft lb)**
- checking, see Repair Group 25
- coat threads with **G5**, but do not let coating enter slits on sensor body

17 — **20 Nm (15 ft lb)**

18 — **Catalytic converter**

19 — **25 Nm (18 ft lb)**

20 — **Seal washer**
- **20 Nm (15 ft lb)**

21 — **Clamping sleeve**
- **40 Nm (30 ft lb)**

22 — **25 Nm (18 ft lb)**

23 — **Clamping sleeve**
- **40 Nm (30 ft lb)**

24 — **Rear muffler**

cardiagn.com

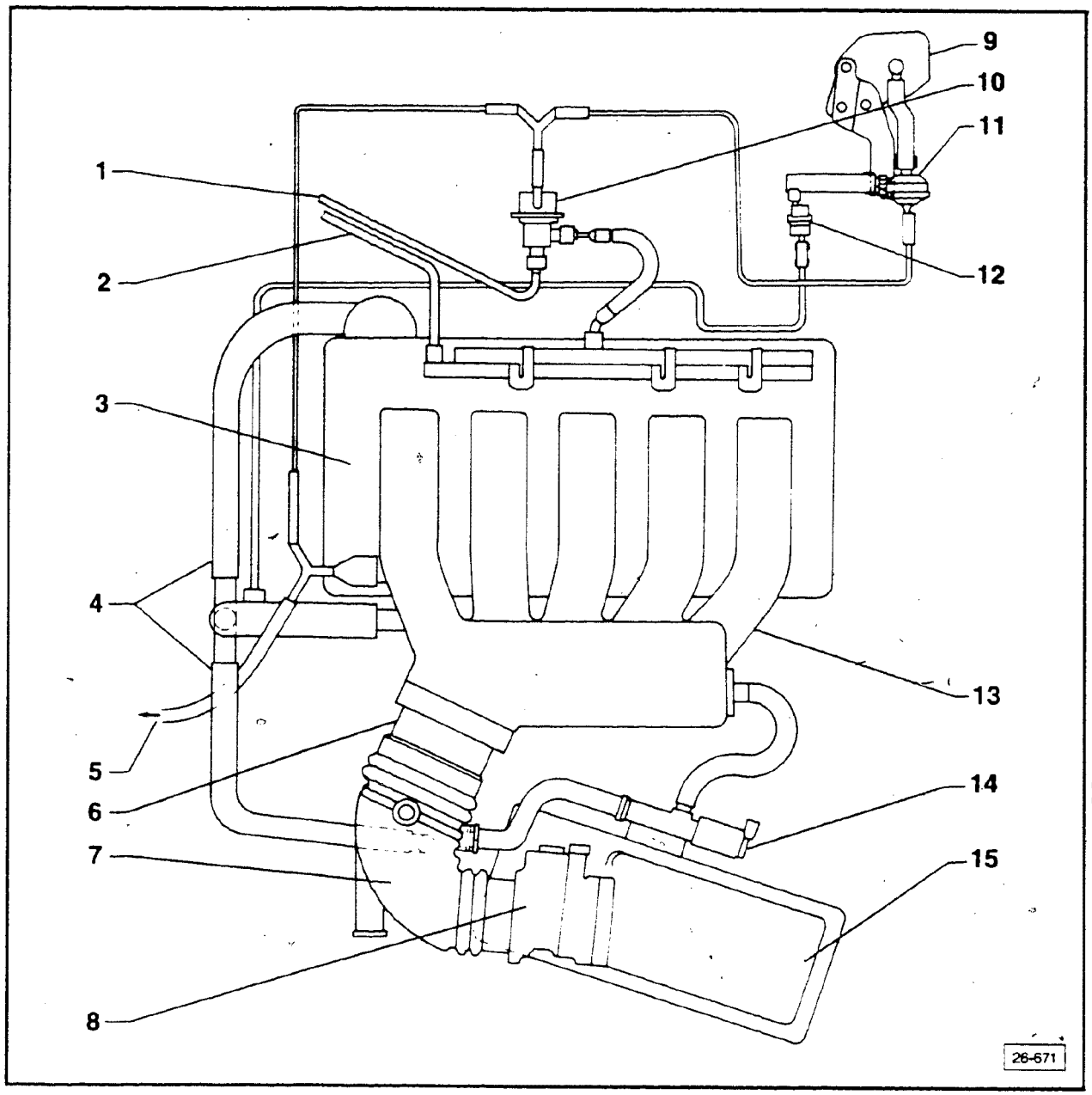

1 — **Fuel return line**

2 — **Fuel supply line**

3 — **Cylinder head**

4 — **Crankcase ventilation hoses**

5 — to Differential lock

6 — **Throttle body**

7 — **Intake air boot**

8 — **Air mass meter**
checking, see Group 28

9 — **Carbon canister**

10 — **Control pressure regulator**
checking, see Group 24

11 — **Cut out valve**
checking, see Group 20

12 — **Carbon canister solenoid valve**
checking, see Group 24

13 — **Intake manifold**

14 — **Idle stabilizer valve**
checking, see Group 24

15 — **Air filter**

cardiagn.com

THIS FRAME INTENTIONALLY LEFT

BLANK

cardiagn.com

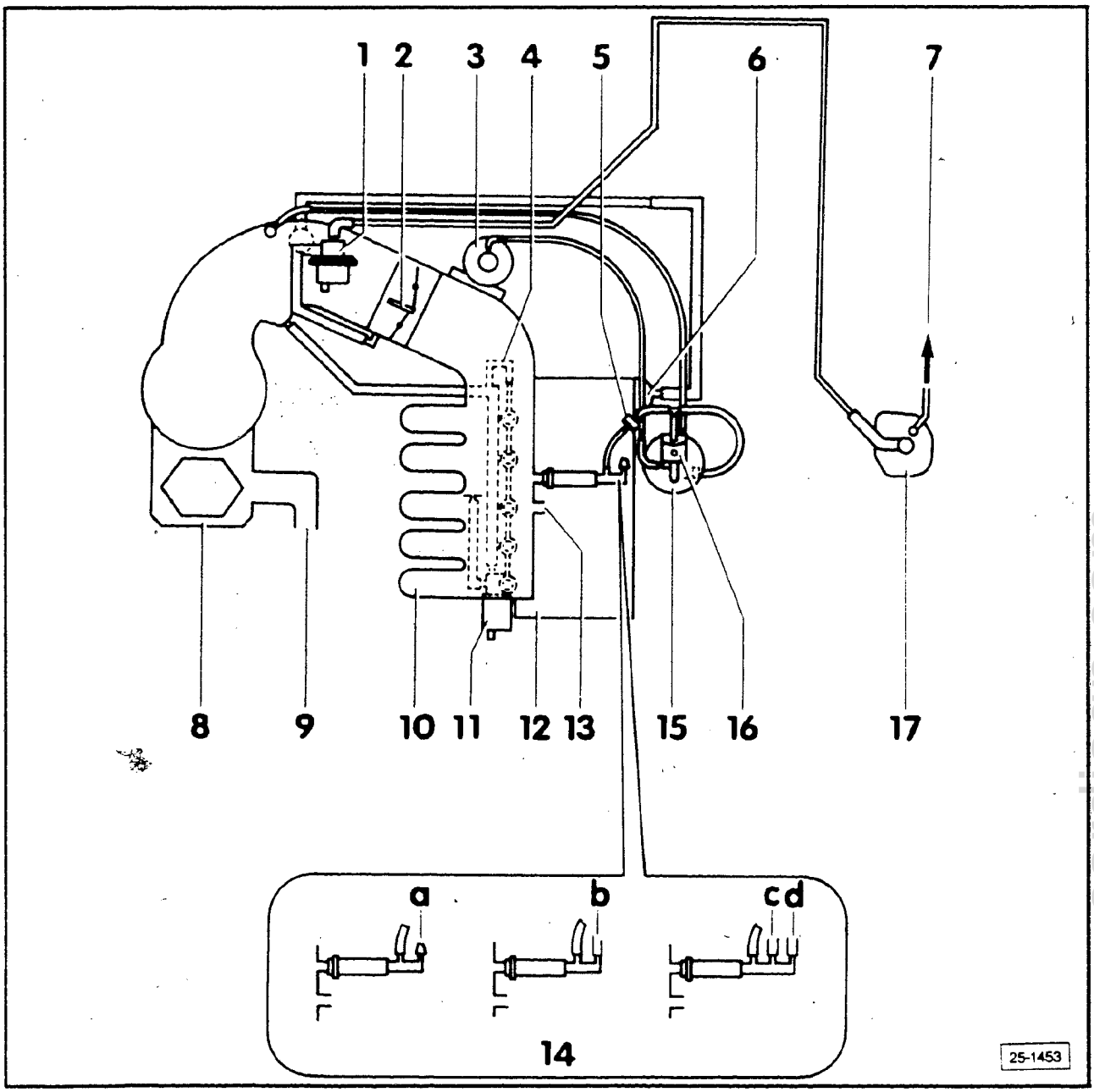

1 — Solenoid valve (N 80) for charcoal canister

2 — Throttle body

3 — EGR valve

4 — Fuel injector

5 — Check valve

6 — Crankcase ventilation

7 — to fuel reservoir

8 — Fuel distributor

9 — from air filter

10 — Intake manifold

11 — Idle stabilizer valve

12 — Cylinder head

13 — Brake booster vacuum connection

14a — Cap (vehicles with front wheel drive without A/C)

14b — A/C or differential lock connection

14c — Differential lock connection (vehicles with four wheel drive and A/C)

14d — A/C connection (vehicles with four wheel drive and A/C)

cardiagn.com

15 — Vacuum reservoir

16 — EGR frequency valve (N 121)

17 — Carbon canister

cardiagn.com

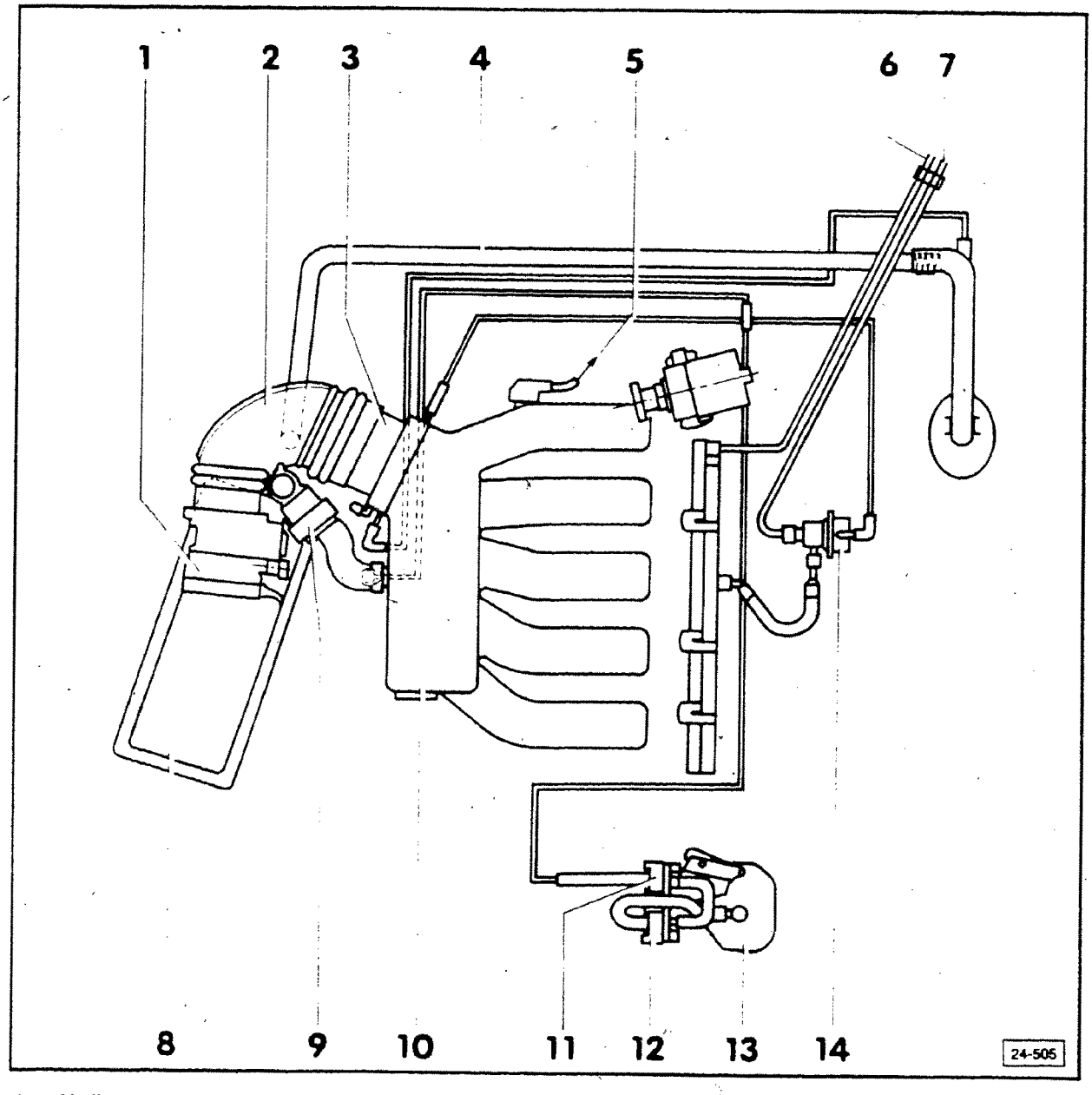

1 — Air flow sensor
2 — Intake air boot
3 — Throttle body
4 — Crankcase ventilation
5 — A/C and Differential lock connection
6 — Fuel supply line
7 — Fuel return line
8 — Air filter
9 — Idle stabilizer valve
10 — Intake manifold
11 — Carbon canister shut-off valve
12 — Carbon canister frequency valve
13 — Carbon canister
14 — Fuel pressure regulator

cardiagn.com

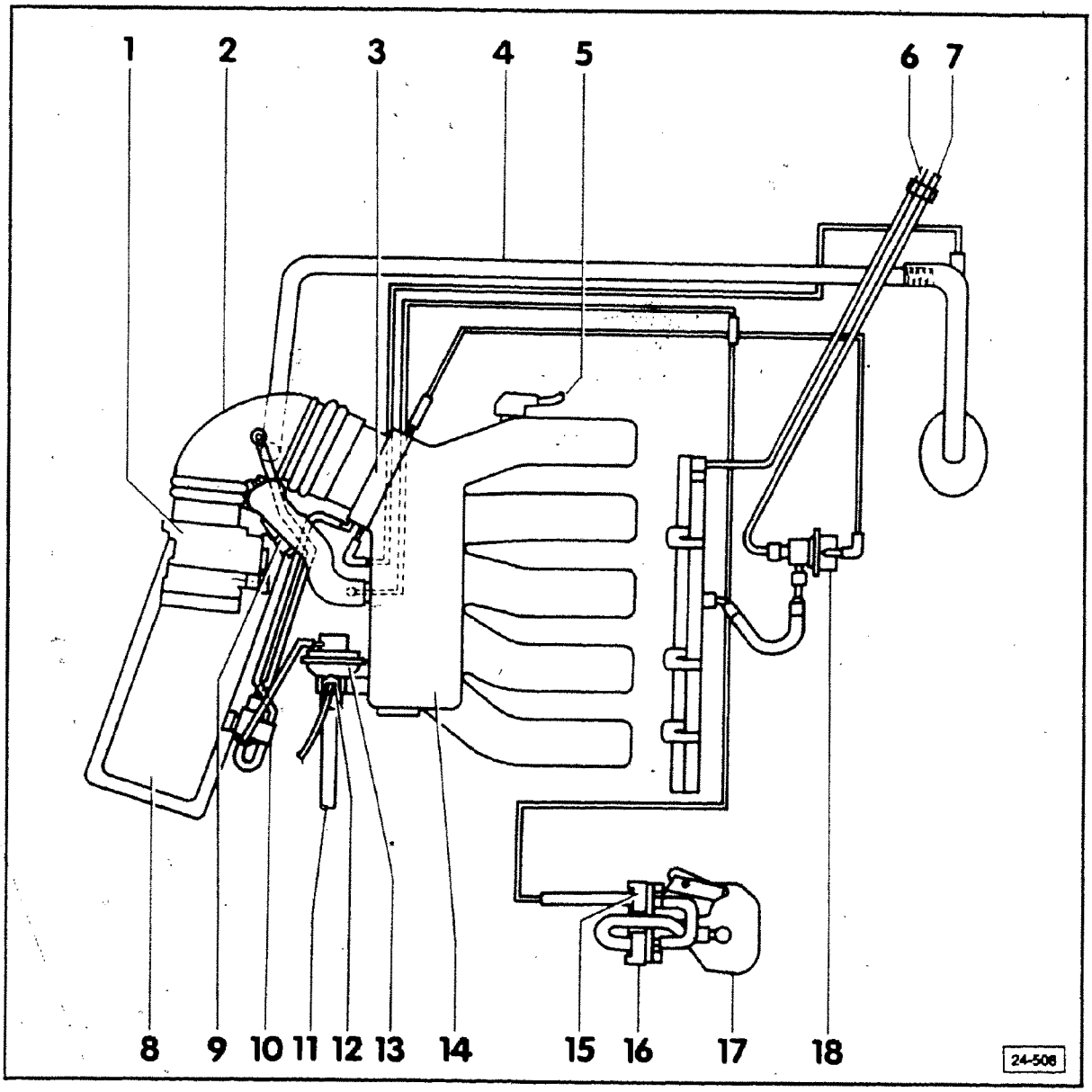

1 — Air flow sensor
2 — Intake air boot
3 — Throttle body
4 — Crankcase ventilation
5 — A/C and Differential lock connection
6 — Fuel supply line
7 — Fuel return line
8 — Air filter
9 — Idle stabilizer valve
10 — EGR frequency valve
11 — from exhaust manifold
12 — EGR temperature sensor
13 — EGR valve (mechanical)
14 — Intake manifold
15 — Carbon canister shut-off valve
16 — Carbon canister frequency valve
17 — Carbon canister
18 — Fuel pressure regulator

cardiagn.com

CONTINUED IN THE

BEGINNING OF NEXT ROW

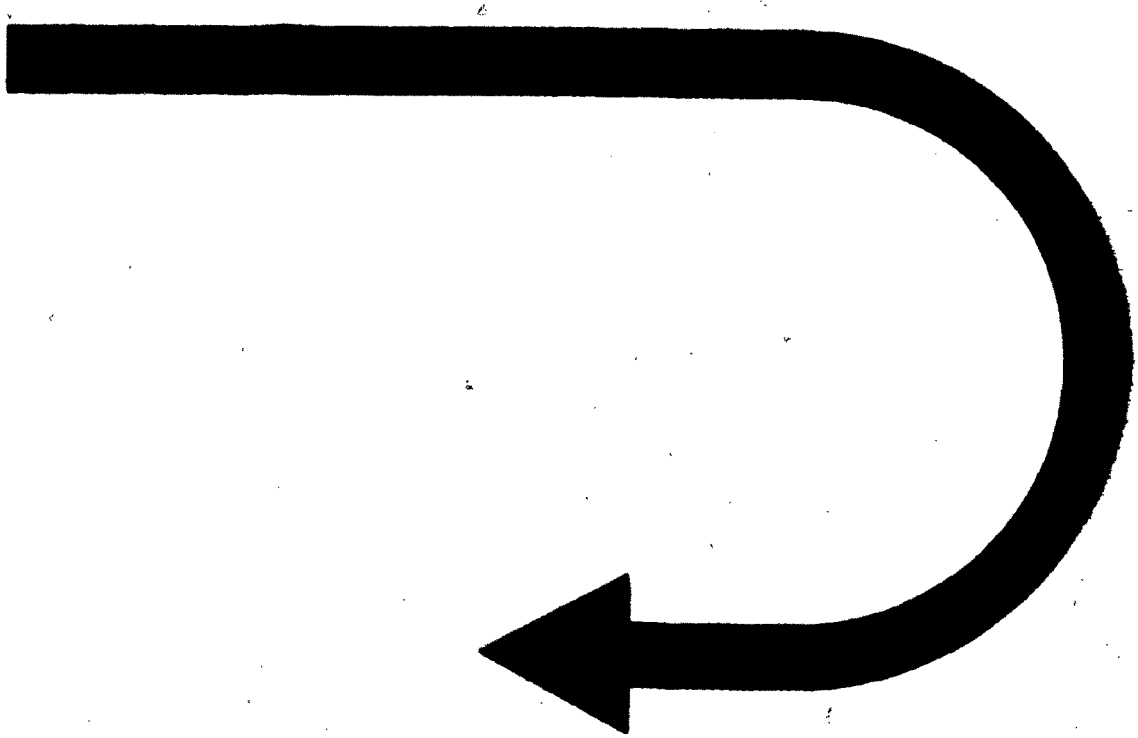

cardiagn.com

Exhaust Gas Recirculation system (EGR), checking (California ONLY)

Note

The function of the EGR is monitored by the Fuel Injection control unit.

Conduct the following check only if Fault code **2411** "EGR System" is displayed. Repair as necessary; then conduct the functional test on page 26-30-6.

Requirements
- engine coolant temperature 80°C (176°F) minimum
- A/C switched **OFF**
- all electrical consumers switched **OFF**
- vacuum connections tight and leak-free
- vacuum lines **NOT** plugged or pinched
- radiator cooling fan must **NOT** be running while taking measurements

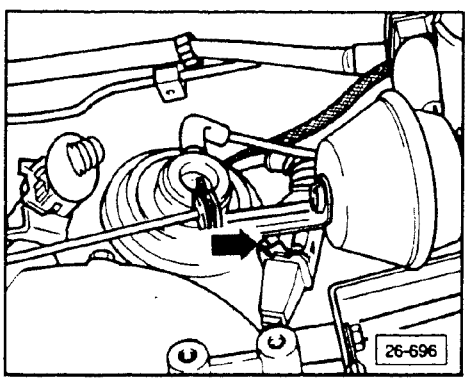

- ensure that harness connector (**arrow**) of EGR temperature sensor (**G 98**) is connected

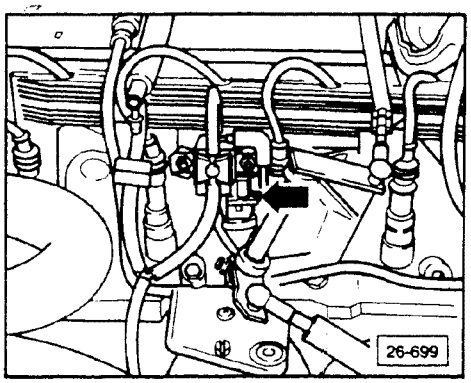

- ensure that EGR frequency valve (**N 121**) harness connector is connected (**arrow**)
- check EGR system vacuum lines per diagram, page 26-20-2

cardiagn.com

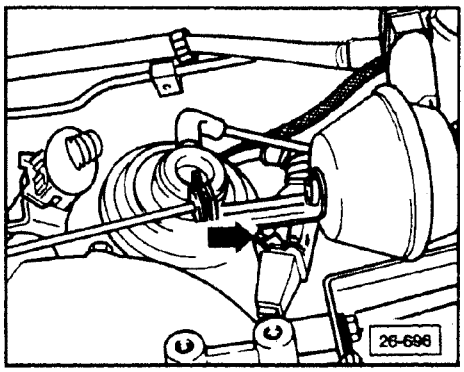

- disconnect harness connector (**arrow**) from EGR temperature sensor (**G 98**)

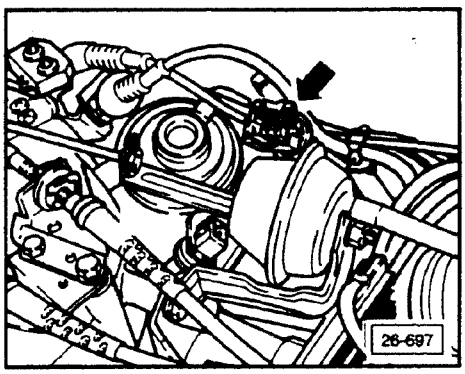

- switch multimeter **US 1119** to 20 volt range
- connect multimeter between terminals **1** and **2** of harness connector (**arrow**)
- switch **ON** ignition
  - must be approximately 5 volts

If voltage **NOT** obtained

- check wiring using wiring diagram and repair as necessary

If voltage obtained

- switch **OFF** ignition and disconnect multimeter
- disconnect harness connector (**arrow**)

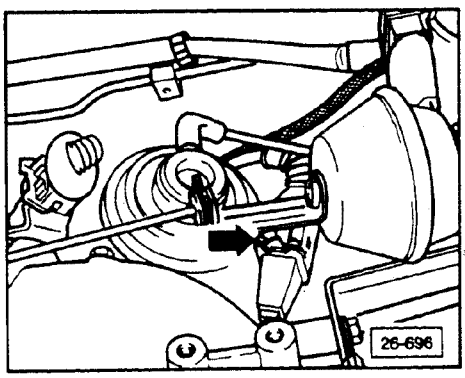

cardiagn.com

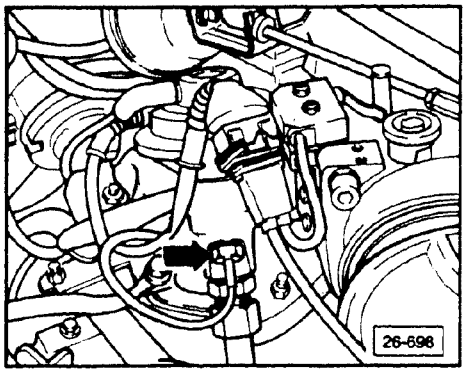

- remove EGR temperature sensor from EGR valve (**arrow**)
- switch multimeter **US 1119** to resistance range
- connect multimeter across terminals of temperature sensor
- submerge sensor in boiling water
  - multimeter must read between 80,000 and 160,000 Ohms

If **NO**

- replace EGR temperature sensor (**G 98**)

If **YES**

- reinstall temperature sensor into EGR valve
  - 20 Nm (15 ft lb)
- reconnect harness connector

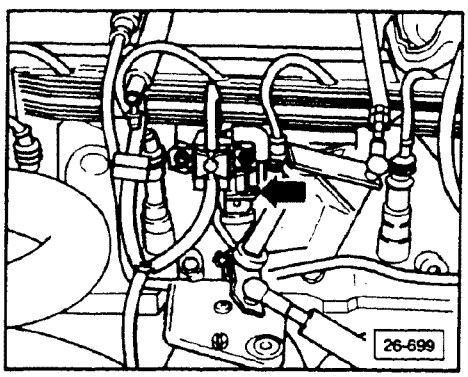

- disconnect EGR frequency valve harness connector (**arrow**)

Note

It is possible for the frequency valve to be mounted in either of two locations; on the cylinder head or on the vacuum reservoir.

- switch **OFF** ignition
- connect **VAG 1367** engine tester

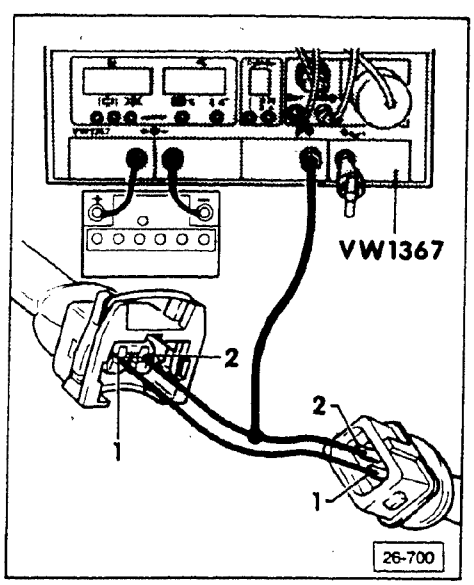

- connect terminals **1** and **2** of harness connector with terminals **1** and **2** of connector using **VW 1594** adaptor kit
- connect green lead of **VAG 1367** engine tester to adaptor wire connecting terminals **2** and **2**
- depress % button on **VAG 1367** engine tester

cardiagn.com

- start engine and raise engine speed to approximately 2000 RPMs (use vehicle tachometer if necessary)
- record duty cycle as displayed on **VAG 1367**
  - 32 ± 10 % at 2000 RPM

Note

Duty cycle is first triggered at 1800 RPM, it will not register below that speed.

If specified value **NOT** obtained
- check test connections

If **OK**
- check wiring using wiring diagram, replace or repair as necessary
- switch **OFF** ignition
- disconnect **VAG 1367** engine tester and **VW 1594** adaptors
- re-connect EGR valve harness connector

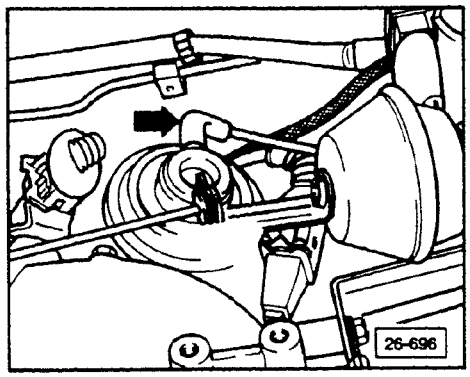

- disconnect vacuum connector (**arrow**) from EGR valve

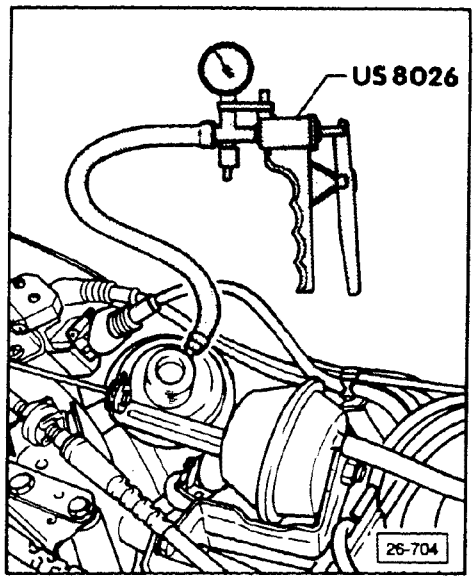

- connect hand vacuum pump **US 8026** to EGR valve vacuum port

Note

Do **NOT** run the engine during these checks.

cardiagn.com

- using hand vacuum pump **US 8026**, apply 600 mbar (17.7 in. of Hg) of vacuum to EGR valve
  - it is permissible for vacuum to drop up to 100 mbar (2.95 inches of Hg)

If vacuum does **NOT** build up or if vacuum drops for a short time by more than 100 mbar (2.95 inches of Hg)

- check **US 8026** vacuum pump connection for leaks or poor connection

If **OK**

- replace EGR valve

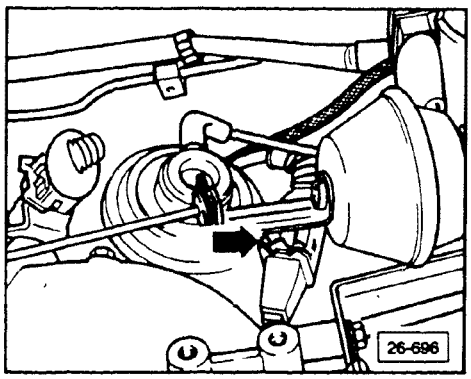

Requirement for the following steps:

- engine coolant temperature must be 80°C (176°F) minimum

- disconnect EGR temperature sensor harness connector (**arrow**)

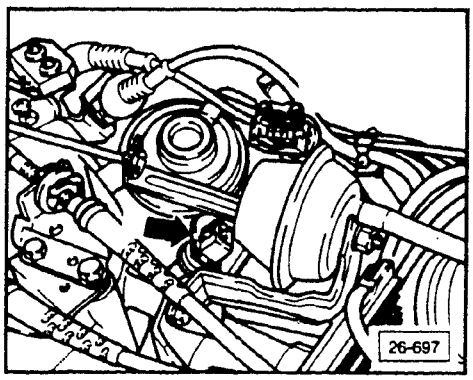

- switch multimeter **US 1119** to resistance range
- connect **US 1119** between terminals **1** and **2** of EGR temperature sensor connector (**arrow**)
- start engine and run at 2000 RPM
- using hand vacuum pump **US 8026** apply a vacuum of 130 ± 20 mbar to the EGR valve (3.8 ± 0.6 inches of Hg)
  - resistance must be between 1,000 and 19,000 Ohms

If **NO**

- replace EGR valve

If **OK**

- replace EGR frequency valve

cardiagn.com

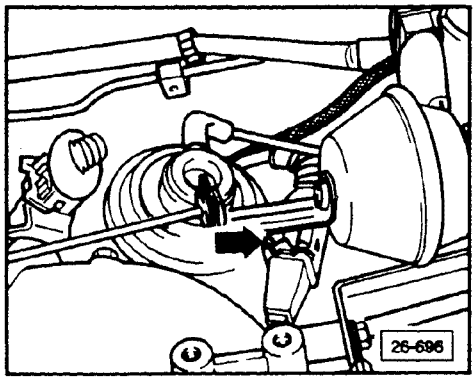

Functional check

Requirement
- EGR system vacuum connections **OK**

- switch **OFF** ignition
- disconnect temperature sensor harness connector (**arrow 1**)

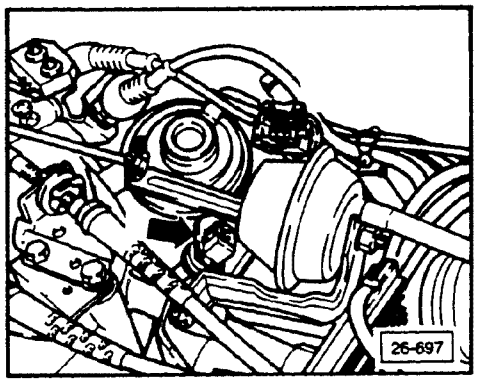

- switch multimeter **US 1119** to resistance range (2 megOhm scale)
- connect multimeter to terminals **1** and **2** of temperature sensor connector (**arrow**) using long adaptor wires from **VW 1594** adaptor kit
- pass multimeter and wires through passenger side window and place on seat, fasten test and adaptor wires in place using adhesive tape

- start engine and let idle until it reaches operating temperature (radiator cooling fan comes on at least once)
- switch **OFF** ignition and wait ten minutes
- read display on multimeter
  - must be greater than 200,000 Ohms

If **NO**
- replace EGR temperature sensor

cardiagn.com

- start engine and let idle for at least three minutes
- switch multimeter **US 1119** to 200 kOhm range
- drive vehicle at constant speed of 50 to 60 mph on flat road for minimum of two and a half miles
  - A/C switched **OFF**
  - transmission selector in drive for automatic or in fifth for manual
- while test driving, observe the On Board Diagnostic (OBD) warning light; when the light comes **ON**: read the resistance display on the multimeter
  - must be less than 50,000 Ohms

If **LESS**

- check EGR system vacuum connections using vacuum diagram page 26-20-2, repair or replace as necessary

cardiagn.com

Fault code, troubleshooting

Fault Code	Possible Cause of Fault	Effect	Repair
1231	Wiring between instrument panel insert and fuel injection control unit is shorted or disconnected	Engine stalls when clutch is engaged	Check for short or disconnected wiring between instrument panel insert and terminal **29** of fuel injection control unit, using wiring diagram
	Transmission speed sender (**G 68**) faulty		Check speed sensor (**G 68**) wiring, replace or repair as necessary
2411 (California ONLY)	Vacuum lines disconnected or pinched	OBD light ON	Check EGR system, section 26-30-1
	EGR temperature sensor (**G 98**) faulty EGR valve faulty	driving fault, e.g. vibration, poor idle	
	EGR system Frequency valve (**N 121**) faulty	Poor starting	
	Disconnected wire between temperature sensor (**G 98**) or Frequency valve (**N 121**) and fuel injection control unit		check wiring using wiring diagram replace or repair as necessary

Note for Fault Code **1231**:
If this Fault is displayed; check first if speedometer is **OK**.
If **YES**: disregard this code.

cardiagn.com

Exhaust Gas Recirculation system, checking (For California vehicles ONLY)

Requirement
- Fuse 28 OK

EGR frequency valve (N 18), electrical check

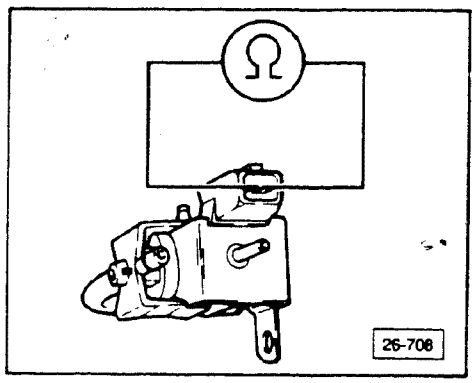

- disconnect EGR valve **(N 18)** harness connector
- switch multimeter **US 1119** to resistance range
- connect multimeter across terminals of EGR valve
  - must be 25 to 35 ohms

If **NO**
- replace EGR valve **(N 18)**

Voltage supply, checking

- connect **US 1115** LED tester between terminal **1** of harness connector and ground using **VW 1594** adaptor kit
- activate starter for several seconds
  - LED tester must light up

If **NO**
- check fuse **28**, replace if necessary
- check continuity of wiring between terminal **1** of harness connector and fuse **28** using wiring diagram
  - resistance must **NOT** be greater than 0.5 ohms
- check continuity of wiring between fuse **28** and terminal **59** of fuel pump relay socket
  - resistance must **NOT** be greater than 0.5 ohms

If **NO**
- check fuel pump relay and triggering, see Repair Group 24 for additional information

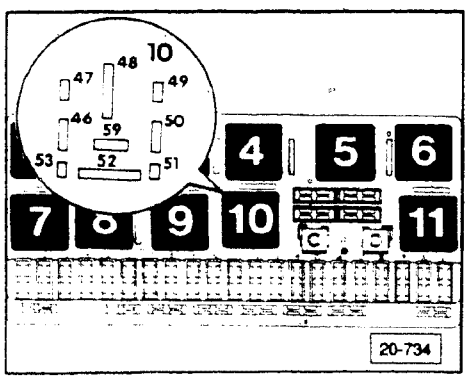

cardiagn.com

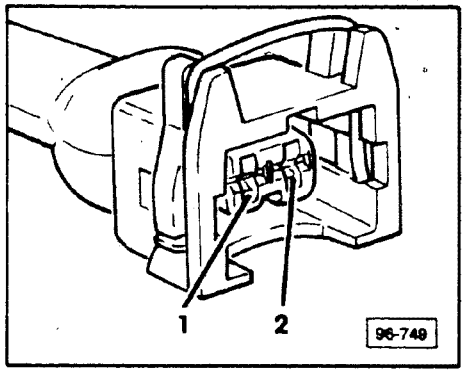

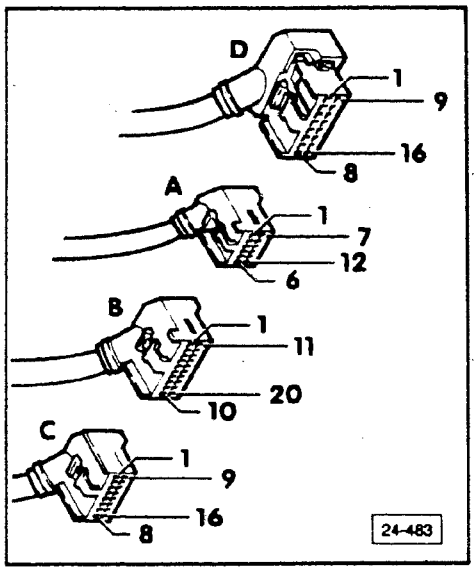

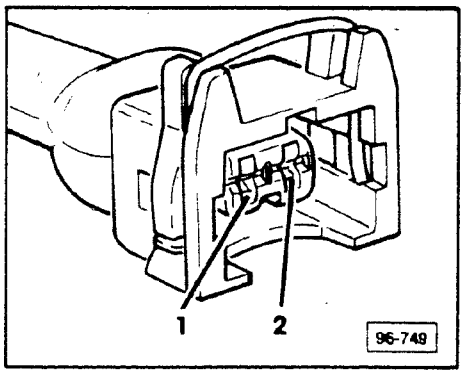

- connect **US 1115** LED tester between terminals **1** and **2** of EGR valve harness connector using **VW 1594** adaptor kit
- perform Output check diagnosis using **VAG 1551** diagnostic tester, see Repair Group D2 for additional information
  - when the step for checking the EGR valve is reached the LED tester must begin to flash

If **NO** or if it lights up constantly (instead of flashing)

- connect **VAG 1598** Test box to harness connector **D** of MPI control unit using adaptor cable **VAG 1598/12**
  - control unit is left disconnected

IF LED tester does **NOT** flash

- check continuity of wire between terminal **2** of EGR valve harness connector and terminal **14** of test box
  - resistance must **NOT** be greater than 0.5 ohms

If LED tester is constantly **ON**

- check for short to ground between terminal **2** of EGR valve harness connector and terminal **14** of test box
- replace or repair wiring as necessary

If wiring **OK**

- replace MPI control unit

Temperature sensor for EGR (G 98), checking

- disconnect EGR temperature sensor harness connector
- switch multimeter **US 1119** to 20 volt range
- connect multimeter between terminals **1** and **2** of harness connector
- switch **ON** ignition
  - must be between 4.5 and 5 volts

If **NO**

- use wiring diagram to determine where open circuit exists and correct as necessary

cardiagn.com

If voltage obtained
- disconnect multimeter from harness connector
- switch **OFF** ignition
- remove EGR temperature sensor from EGR valve

- switch multimeter **US 1119** to 200 K ohm range
- attach multimeter to temperature sensor terminals using **VW 1594** adaptor kit
- immerse temperature sensor in boiling water
  - resistance must change

If **NO**
- replace temperature sensor

EGR valve (mechanical), checking

Requirement
- vacuum lines and connections must be **OK**
- EGR frequency valve (N 18) **OK**

- disconnect vacuum hose from mechanical EGR valve (coming from EGR frequency valve)
- connect hand vacuum pump **US 8026** to mechanical EGR valve
- start engine and let idle

- pump hand vacuum pump
  - engine must vibrate and run rough

- release vacuum at vacuum pump
  - engine must restore itself to a smooth idle

If engine runs smooth after applying vacuum
  - replace mechanical EGR valve

cardiagn.com

Evaporative system leakage, troubleshooting

WARNING

These tests involve the use of equipment that contain mercury.

Mercury is a toxic and hazardous material.
- exercise extreme care when handling
- do **NOT** allow to come in contact with eyes, nose, skin, etc.
- when not in use, store carefully in a properly designated area
- be sure both valves are closed when storing tester

Check these first:
- fuel filler cap securely closed
- fuel level at least 2/3 full (otherwise it will require excessive pumping to pressurize the system)

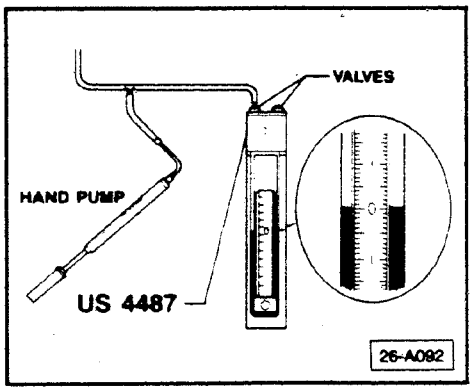

- disconnect small hose from carbon canister
- vertically connect slack tube tester **US 4487** at disconnected hose from charcoal canister
- open both slack tube valves a 1/2 turn
- move scale on tester such that the zero line is even with the tops of the mercury columns
- pressurize the system to 1.3 inches of mercury, using the handpump

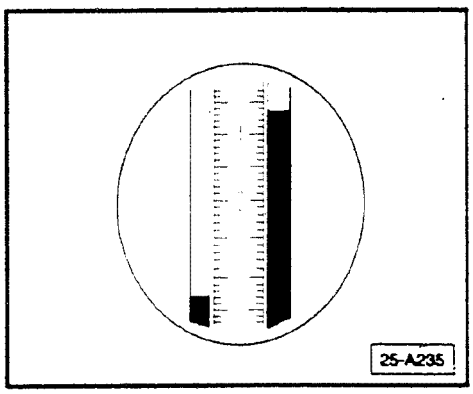

- pressurize the system to 1.3 inches of mercury, using the handpump

Note

If the system reaches the 1.3 inches of mercury soon after you begin pumping, there is reason to suspect that the gravity valve or hoses to it, might be pinched or blocked.

With 2/3 of a tank of fuel it should take considerably more pumping to achieve the 1.3 inches of mercury.

cardiagn.com

After reaching 1.3 inches of mercury on scale; wait 5 minutes:

- system **OK** if pressure is 1.2 inch of mercury or greater

If pressure drops below 1.2 inch of mercury:

- check fuel filler cap for leakage using soap solution, replace if necessary
- pressurize system to 1.3 inches of mercury, wait 5 minutes

If pressure still drops below 1.2 inch of mercury:

- disconnect hose from top of gravity valve (between gravity valve and carbon canister) and plug hose
- pressurized system to 1.3 inches of mercury, wait 5 minutes

If pressure still drops below 1.2 inch of mercury:

- the leak is between the gravity valve and carbon canister

If pressure does **NOT** drop below 1.2 inch of mercury:

- re-connect gravity valve and re-pressurize system
- check hoses/connections at expansion tanks and fuel tank by applying a soap solution
- seal, repair or replace as necessary

After you have repaired the leak(s):

- repeat test to verify that you have fixed all of the leakage
- after tests are completed, close both valves on the tester then properly store

cardiagn.com

Index

Alternator

- exciter circuit, checking **27.11**
- indicator light, troubleshooting **27.12**
- output checking **27.10**
- ★ v-belt tension, checking/adjusting **27.14**
- voltage regulator, checking **27.16**

Battery

- checking/adjusting **27.2**
- condition, checking **27.3**
- jump starting **27.8**
- troubleshooting **27.9**

Cruise control

- component layout **27.19**
- steering column switches, removing/installing **27.22**
- vacuum servo **27.20**
- vacuum system, checking **27.22**
- vacuum vent valves, removing **27.21**

Starter

- troubleshooting **27.17**

★ <u>NEW INFORMATION</u> since last filming

cardiagn.com

Battery

- specific gravity; checking, section 27.3
- voltage; checking, section 27.4
- charging, section 27.6
- troubleshooting guide, section 27.9

CAUTION

Before beginning repairs on the electrical system, disconnect battery negative cable.

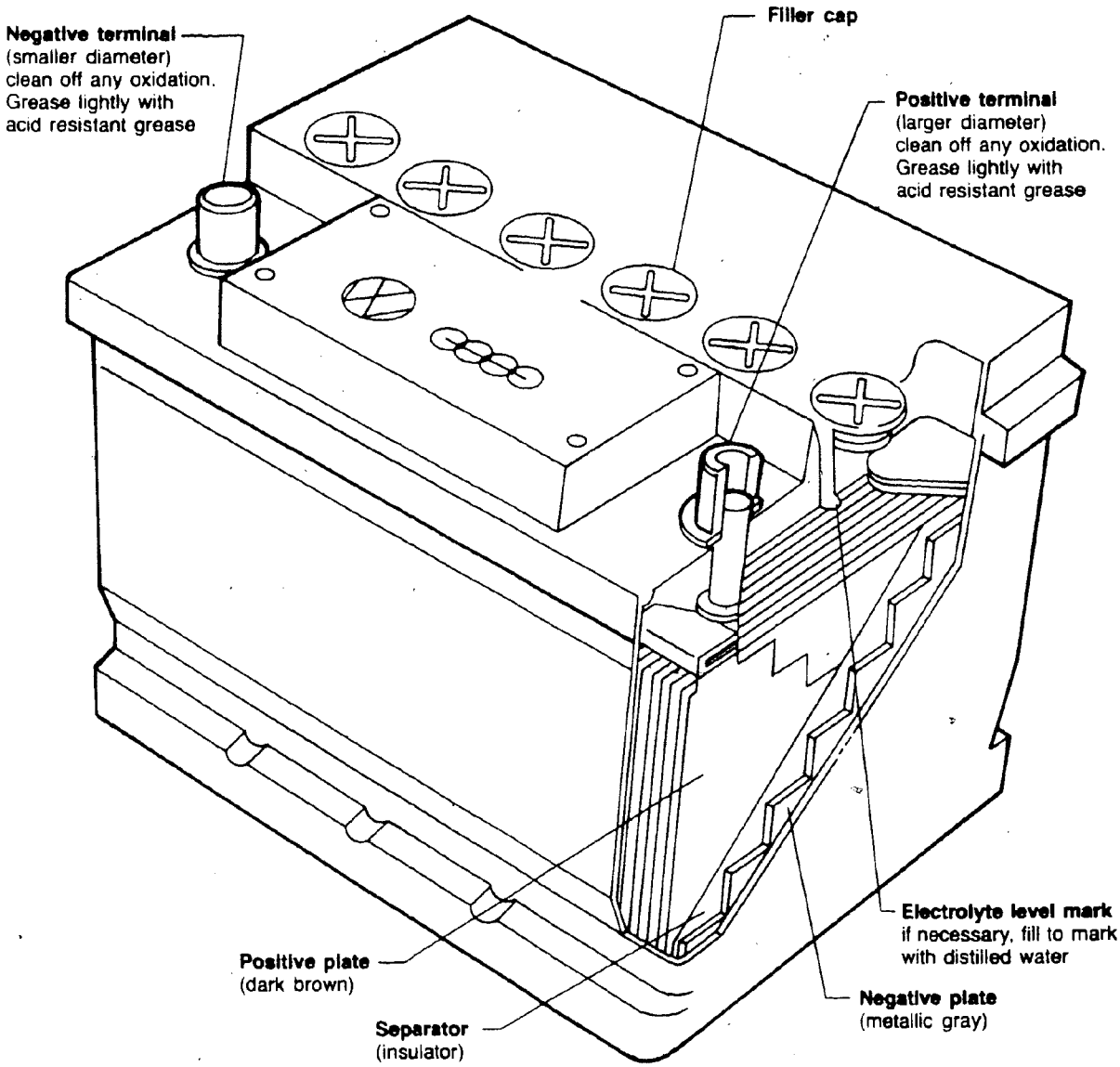

cardiagn.com

Battery condition, checking

A weak battery can be caused by:
- alternator belt slipping (replace belt if glazed)
- ground straps corroded, loose or broken
- alternator or voltage regulator defective
- alternator warning light bulb burned out
- poor ground connection between warning light socket and circuit board

Battery and cable terminals should be cleaned and then coated with acid resistant grease to prevent corrosion.

Visual checks

- check for:
  - cracked or leaking case
  - loose or corroded terminals
  - low electrolyte level

Hydrometer test (specific gravity) (for batteries with removable caps)

> **CAUTION**
>
> Do not expose fully discharged battery to freezing temperature because battery will be damaged.

- test electrolyte in all cells
  - average specific gravity should be at least 1.225
- correct for electrolyte temperature if necessary
  - for every 10°F **above** 80°F **add** .004 to hydrometer reading
  - for every 10°F **below** 80°F **subtract** .004 from hydrometer reading

Specific gravity	% of charge
1.265	100%
1.225	75%
1.190	50%
1.155	25%
1.120	0%

cardiagn.com

If specific gravity is **above** 1.225

- load test battery

If specific gravity is **below** 1.225

- recharge battery

If specific gravity varies by more than .050 between cells

- replace battery

Battery voltage test – engine not running (for sealed and non-sealed batteries)

- turn headlights on high beam for 1 minute to remove surface charge
- disconnect battery ground strap
- check battery voltage using multimeter **US 1119**
  - 12.4 volts minimum

Voltage	% of charge
12.8 or more	100%
12.5	75%
12.2	50%
12.0	25%
11.7 or less	0%

If above minimum voltage

- load test battery

If below minimum voltage

- charge until 12.55 volts minimum

Load test

Note

Before load testing, battery must be at least 75% charged.

- connect load tester according to manufacturer's instructions
- load battery to 3 times amp/hour rating **or** 1/2 0°F cold cranking current rating
- wait 15 seconds and read voltage
  - battery voltage at room temperature should be9.6 volts minimum

cardiagn.com

If **NO**

- replace battery

Note

If battery is colder than room temperature, voltage under load will be **lower**.

If battery must be tested cold:

- use table

Approximate electrolyte temp. °F (°C)	Minimum acceptable voltage under load
60 (16)	9.5
50 (10)	9.4
40 (4)	9.3
30 (−1)	9.1
20 (−7)	8.9
10(−12)	8.7
0(−18)	8.5

cardiagn.com

Battery, charging

Note

Follow battery charger manufacturer's instructions. Before testing a battery that has been charged, load battery with 15 amps for 1 minute to remove surface charge.

WARNING

Gases given off during charging are explosive. Do **NOT** smoke or allow sparks or flame near a charging battery.

Battery charger **MUST** be turned off when connecting or disconnecting cables on battery.

"Boosting" a sulfated battery at a high charging rate can cause an explosion!

Battery with removable caps

If water is added, charge battery for 15 minutes at approximately 10% of battery capacity. Fast charge (60 amps max) **only** if a time constraint is present.

CAUTION

Do not allow battery charging voltage to exceed 15 volts.

If battery begins gassing (boiling) violently when charging, **REDUCE** charging rate.

Do **NOT** disconnect battery while engine is running.

- charge battery according to following table:

Specific gravity	Fast charge up to
1.150 or less	1 hour
1.150 to 1.175	3/4 hour
1.175 to 1.200	1/2 hour
1.200 to 1.225	1/4 hour
above 1.225	slow charge **ONLY** to 1.250-1.280

cardiagn.com

Sealed batteries

Only **slow** charge sealed batteries. Sealed batteries, sometimes called "maintenance free," will not accept high rate of charge, making it necessary to charge it for up to twice as long as battery with removable caps. Also, voltage reading will **NOT** increase as rapidly as when charging battery with removable caps.

cardiagn.com

Battery, jump starting

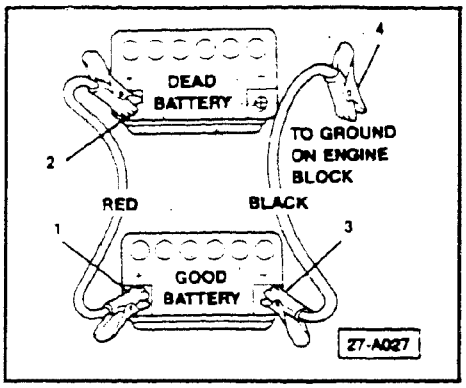

CAUTION

Car with good battery must **NOT** be running when connecting jumper cables.

- connect jumper cables in following order:
  - 1 – one end of positive cable to + post of good battery
  - 2 – other end of positive cable to jump start terminal (in engine compartment)
  - 3 – one end of negative cable to - post of good battery
  - 4 – other end of negative cable to engine block of car with dead battery
- start car with good battery first
- next start car with dead battery
- disconnect jumper cables in reverse order

cardiagn.com

Battery discharges, troubleshooting

Current draw suspected

Check these first:
- fully charged battery

Battery discharges

Possible causes
- corroded terminals
- worn insulation
- internal short circuits in electrical equipment

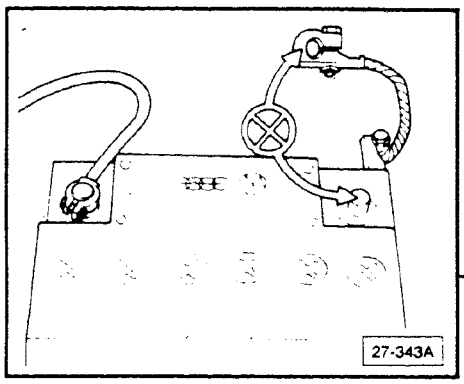

- disconnect battery ground (–) strap
- connect test light between negative (–) battery terminal and ground strap
- turn off all electrical consumers
- close all doors

Test light lights up	Test light does not light up

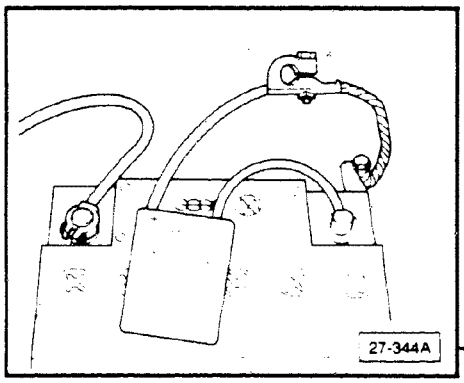

- eliminate individual circuits by removing fuses
- if test light goes out in one of interrupted circuits, source of fault is to be found there

- in place of test light, connect ammeter (measuring range 0-200 mA) between negative (–) battery terminal and battery ground strap
- reduce measuring range until a clear reading is shown (1-3 mA is permissible)

- eliminate individual circuits by removing fuses
  if reading drops to zero in one of interrupted circuits, source of fault is to be found there

- if no faults are found in fused circuits, disconnect wiring connectors from nonfused components:
  - alternator
  - starter
  - ignition system
  - cluster instruments
  - coolant fan and so on until defective circuit or component is discovered

- repair or replace as necessary

End

cardiagn.com

Alternator output, checking

Using the SUN VAT-40 (or VAT-60)

- connect black clamp to battery negative (−)
- connect red clamp to battery positive (+)
- connect green clamp (inductive pickup) to alternator **D+**: either at alternator or battery
- start engine
- raise engine speed and hold at 2000 RPM
- slowly adjust load control of **VAT-40** (or **VAT-60**) until highest possible reading is obtained
  - must be within 10% of manufacturers specifications

> **CAUTION**
>
> Test must be performed and completed within fifteen seconds to avoid overloading and damaging the electrical system.

cardiagn.com

Alternator exciter circuit, checking

Note

If the complaint "battery isn't being charged" is received even though the warning light comes on when the ignition is switched **ON** and goes out when the ignition is switched **OFF**; check the exciter circuit as follows:

- verify that battery voltage is approximately 12 volts minimum, charge as necessary
- disconnect blue wire from alternator terminal **61**
- switch multimeter **VAG 1526** (**US 1119**) to 200 mA range

- connect multimeter between disconnected blue wire and alternator terminal **61**
- switch **ON** ignition
  - current must fall between 150 and 185 mA

If reading is lower than 150 mA

- check blue wire between alternator and instrument panel or replace printed circuit in instrument cluster

cardiagn.com

Alternator indicator light, troubleshooting

Does not illuminate with ignition ON (engine NOT started)

Possible open circuit between alternator D+ and indicator light

- remove alternator cover
- remove D+ wire from alternator
- connect jumper wire between D+ and ground
- turn **ON** ignition

Alternator indicator light comes **ON**

Possible causes:

- improper alternator ground
- worn out carbon brushes
- defective voltage regulator
- defective rotor

Check alternator grounding and brushes:

If **NOT OK**:
- make necessary corrections
- if light now comes on

End

If **OK**:
- replace voltage regulator

If light still fails to come on:

- replace alternator

End

Alternator indicator light does **NOT** light up

Possible causes:

Alternator indicator light burnt out

- disconnect battery ground strap
- replace indicator lamp
- connect battery ground strap
- switch ignition **ON**

Alternator indicator light comes **ON**

End

Alternator indicator light does **NOT** light up

Wiring between alternator D+ and indicator light is open

- repair break in wiring between alternator D+ and indicator light using wiring diagram

End

cardiagn.com

Light is on with ignition **OFF**

- alternator diode(s) defective (rectifier bridge)
- replace alternator

End

Alternator indicator light does **NOT** go out when RPM increases

Possible causes:

- slipping alternator belt, tighten if necessary
- ground short between alternator D+ and indicator light (see next box)
- defective alternator, replace

End

Possible short to ground between alternator D+ and indicator light

- disconnect alternator wiring
- turn **ON** ignition

Alternator indicator light comes **on**	Alternator indicator light does **NOT** light up
■ short to ground in wiring between alternator D+ and indicator light ■ repair short in wiring using wiring diagram	■ test alternator output ■ test voltage regulator
End	■ replace defective component
	End

cardiagn.com

Alternator V-belt tension, checking (for engines without toothed rack on bracket)

Due to increased alternator output, V-belt tension checking is more important than before.

The following values apply for checking tension using the "thumb test."

V-belts up to 1000 mm long (39.4 in.) maximum deflection **a**:

- new V-belt — approximately 2 mm (0.079 in.)
- used V-belt — approximately 5 mm (0.197 in.)

V-belts over 1000 mm long (39.4 in.) maximum deflection **a**:

- new V-belt — approximately 10 mm (0.39 in.)
- used V-belt — approximately 15 mm (0.59 in.)

Note

The values given are retroactive for all vehicles currently manufactured.

Adjusting

- loosen bolts (**arrows**)
- push alternator outward until specification **a** is achieved
- tighten mounting bolts (**arrows**)

cardiagn.com

Alternator V-belt tension, adjusting

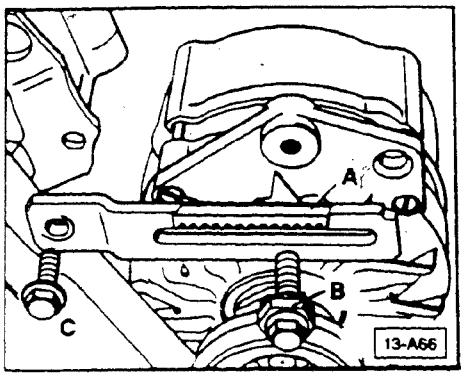

Vehicles with toothed mechanism

- loosen bolts **B**, **C**, and pivot bolt in cradle (not shown)

Note

The mounting bolts should be loose enough for the alternator to swing freely under its own weight.

- tension the V-belt by rotating tensioning gear **B** using a box wrench
- using your free hand check the belt deflection at point **a** (see illustration 10-826)
  - new V-belt: 8 mm (0.3 in.)
  - used V-belt: 4 mm (0.16 in.)
    tighten or loosen the tensioning gear as necessary to achieve specification **a**
- torque bolt **B**, while maintaining this wrench setting
  - 35 Nm (26 ft lb)
- torque **C**
  - 20 Nm (15 ft lb)
- torque cradle bolt
  - 35 Nm (26 ft lb)

cardiagn.com

Alternator belt, adjusting

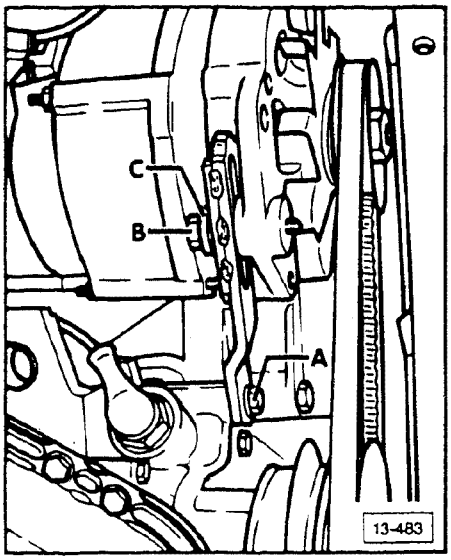

This procedure applies to vehicles with 5 cylinder engine and toothed rack style of adjustment.

- loosen mounting bolts **A** and **B** (for toothed rack) **by one turn**
- loosen alternator pivot bolt in cradle (not shown)

Note

The mounting bolts should be loose enough for the alternator to swing freely under its own weight.

- rotate tensioning gear **C** until proper belt deflection is obtained (check deflection at center point of belt between pulleys, using free hand)
  - new belt 2.0 mm (5/64 in.) approximately
    used belt 5.0 mm (13/64 in.) approximately
- tighten bolt **B** while maintaining proper v-belt tension
  - 35 Nm (26 ft lb)
- tighten bolt **A**
  - 20 Nm (15 ft lb)
- tighten alternator pivot bolt (not shown)
  - 35 Nm (26 ft lb)

cardiagn.com

Alternator voltage regulator, checking

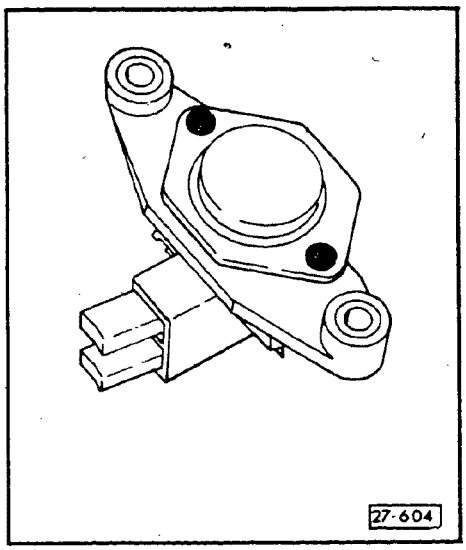

- measure length of carbon brushes
  - must be: new 12 mm

    wear limit: 5 mm

    tolerance ± 1 mm

cardiagn.com

Starter, troubleshooting

Does not turn engine when ignition/starter switch is operated

Check these first:

- solenoid switch connections **OK**
- ground straps between engine and body tight and corrosion free
- battery fully charged
- use **SUN VAT-40** or **SUN VAT-60** for measurements

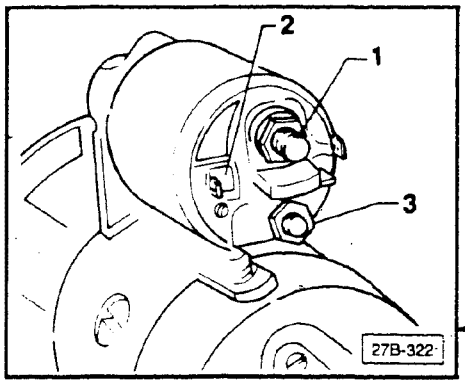

Terminal locations

1 — terminal **30** — from positive (+) battery terminal
2 — terminal **50** — from ignition/starter switch
3 — connection for armature

Note

See routing of wire **50** in wiring diagram.

■ measure voltage at terminal **50** of solenoid switch while cranking
- 8 volts minimum

No voltage or less than 8 volts	Voltage **OK**

Note

This measurement assumes terminal **30** current at ignition switch.

■ measure voltage at terminal **50** of ignition/starter switch (min. 8 volts)

No voltage	Voltage **OK**

■ replace ignition/starter switch → End

■ check wiring between terminal **50** on ignition/starter switch and terminal **50** on starter solenoid and make necessary repairs → End

■ measure voltage at connection **3** for armature on solenoid switch
- 8 volts minimum

No voltage	Voltage **OK**

■ replace solenoid switch → End

■ replace starter → End

cardiagn.com

Turns engine too slowly or engages and will not turn engine

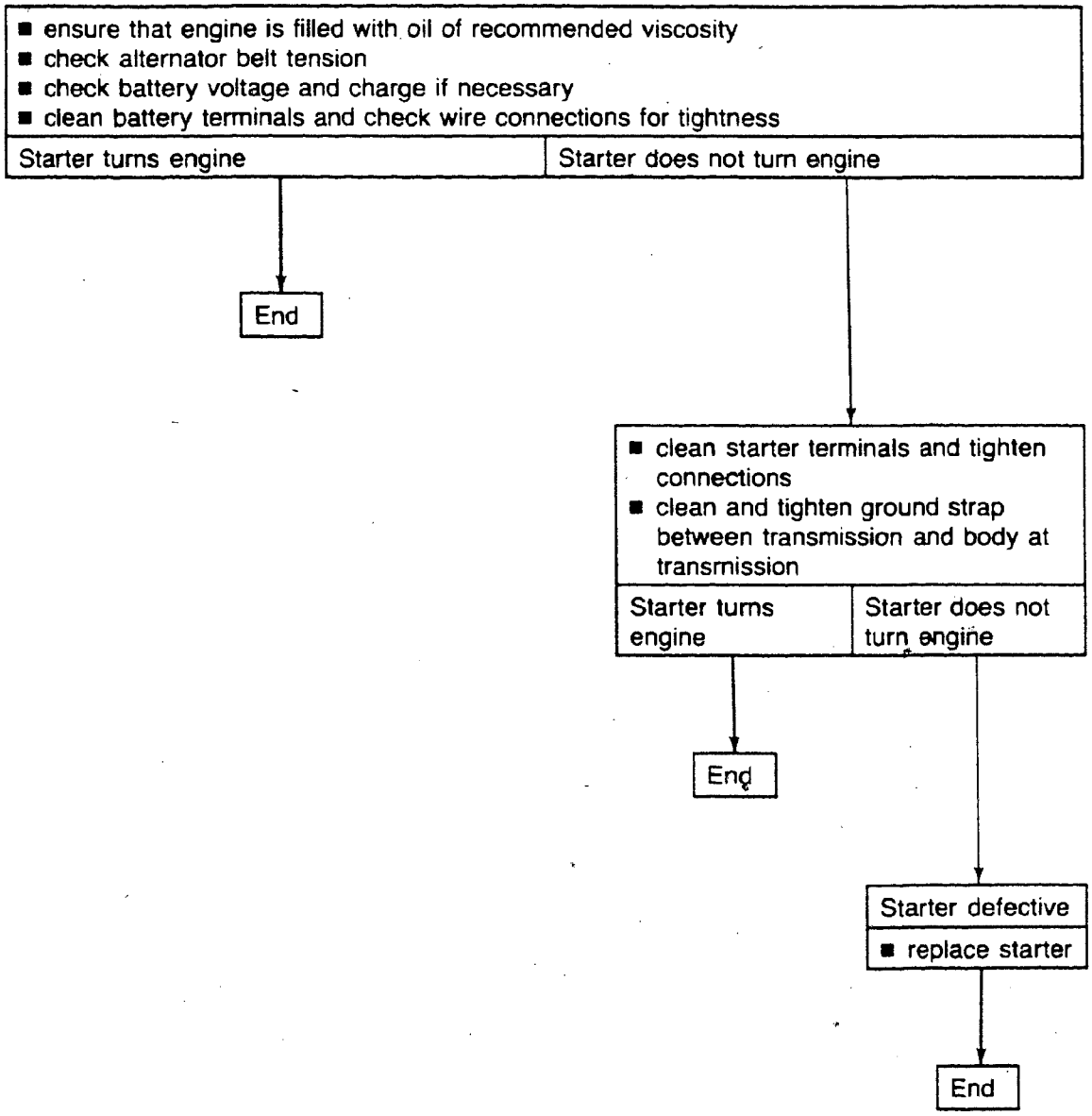

cardiagn.com

CONTINUED IN THE

BEGINNING OF NEXT ROW

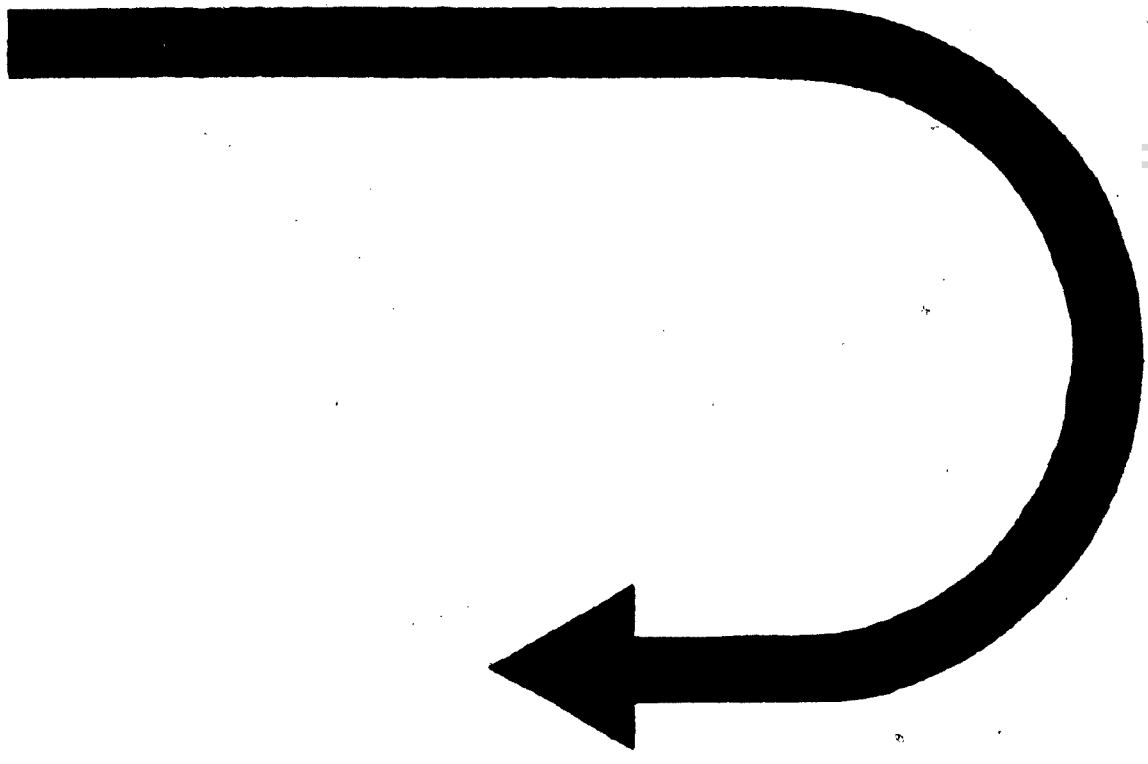

cardiagn.com

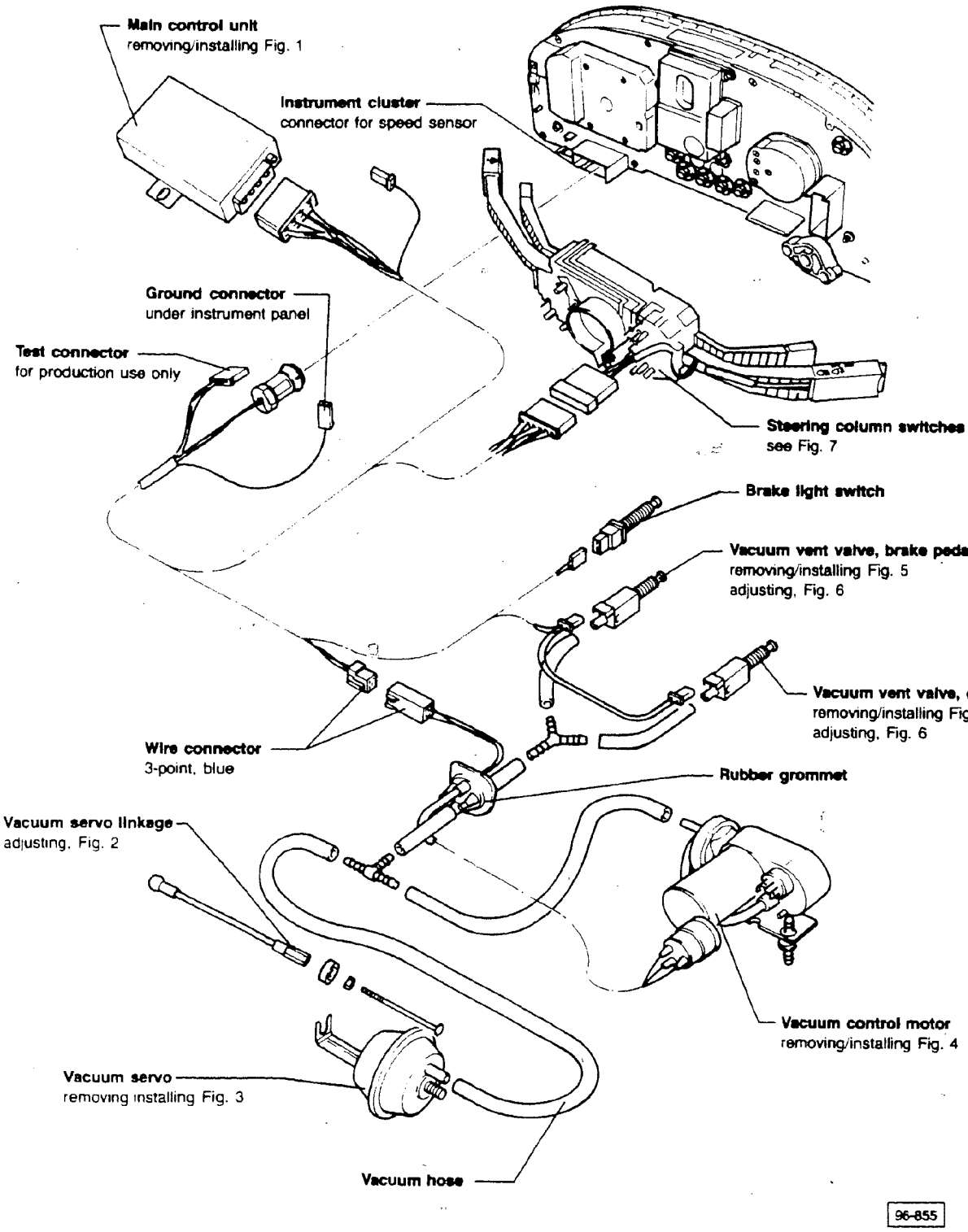

cardiagn.com

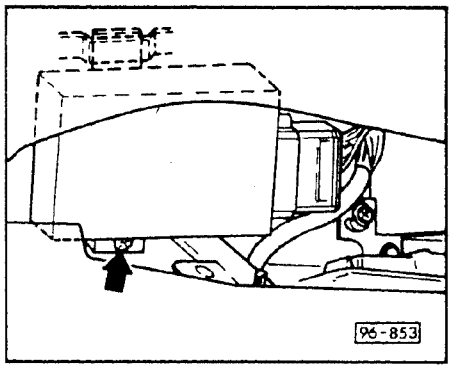

▶ **Fig. 1 Main control unit, removing/installing**

- remove glove compartment
- from rear side of instrument panel, remove Phillips head screw
- remove control unit from strap and disconnect electrical connector

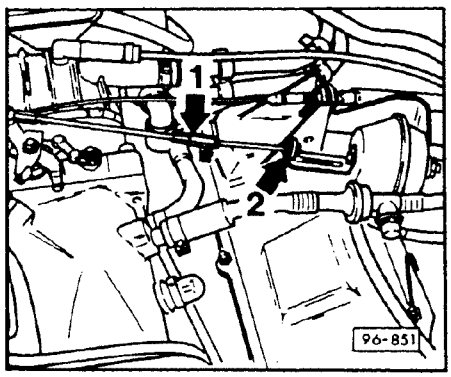

▶ **Fig. 2 Vacuum servo linkage, adjusting**

- make sure throttle is closed
- turn adjuster nut (**1**) so there is clearance between bushing and contact plate (**2**)
  - 0.1mm to 0.3mm

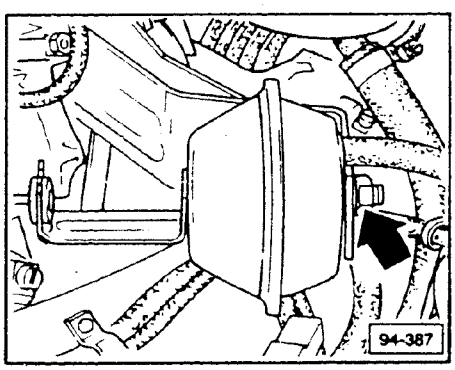

▶ **Fig. 3 Vacuum servo, removing**

- unclip or unscrew linkage
- remove vacuum hose
- remove vacuum servo from bracket (**arrow**)
  - 25 Nm (18.4 ft lb)

cardiagn.com

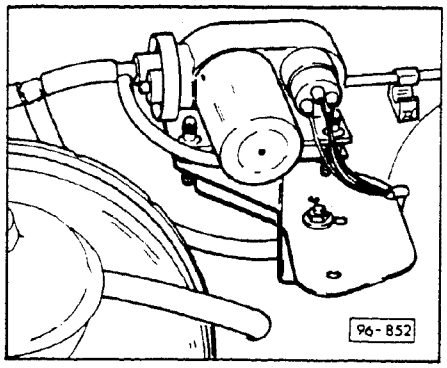

▶ **Fig. 4 Vacuum control motor, removing/installing**

On vehicles with 4 cylinder motor
- remove complete pump with rubber grommets up and out from bracket

On vehicles with 5 cylinder motor
- remove pump down and out from bracket

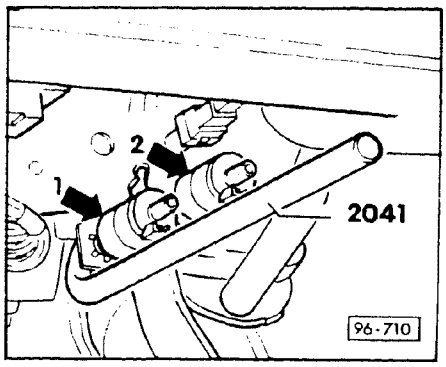

▶ **Fig. 5 Vacuum vent valves, removing**

- remove cover from under left side of instrument panel
- remove electrical connector from vacuum vent valve

With "J" shaped tool,
- push vacuum vent valve out of bushing from behind

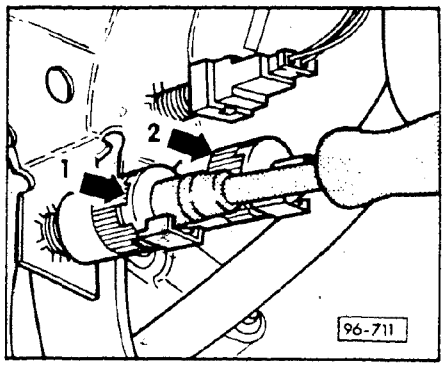

▶ **Fig. 6 Vacuum vent valves, installing**

- install valve loosely by hand
- push vent valve through bushing as far as possible using 10mm socket
- pull brake (clutch) pedal as far back as it will go
- release pedal slowly
- switch is now adjusted

cardiagn.com

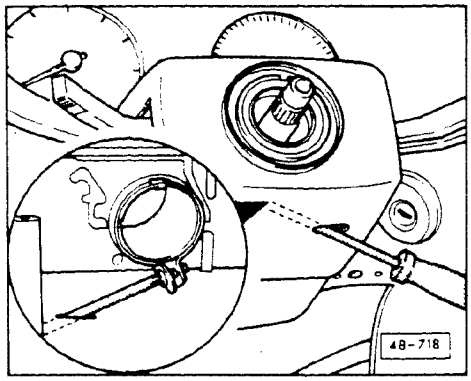

▶ **Fig. 7 Steering column switches removing/installing**

- remove steering wheel
  - 40 Nm (29.5 ft lb)
- loosen clamp for steering column switch
- disconnect switch connectors
- pull off steering column switches

Vacuum system, checking

- remove vacuum hose from vacuum control pump
- push vacuum servo in until stop
- cover end of vacuum hose with finger
  - vacuum servo must not release

If vacuum servo releases to original position,
  - the vacuum system is leaking

- check the following components for vacuum leaks:
  - vacuum vent valves
  - vacuum vent valves are properly installed
  - vacuum servo
  - vacuum hoses
- repair as necessary

cardiagn.com

Microfilm Service Information System

Quality Control Test Pattern

ORIGINAL 9 28 81
REVISED 11 17 81

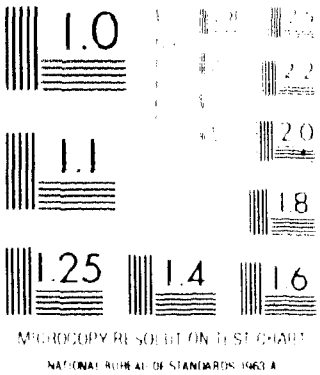

POINT SIZE

14 ABCDEFGHIJKLMNOPQRSTUVWXYZ
12 ABCDEFGHIJKLMNOPQRSTUVWXYZ
11 ABCDEFGHIJKLMNOPQRSTUVWXYZ
10 ABCDEFGHIJKLMNOPQRSTUVWXYZ
9 ABCDEFGHIJKLMNOPQRSTUVWXYZ
8 ABCDEFGHIJKLMNOPQRSTUVWXYZ
7 ABCDEFGHIJKLMNOPQRSTUVWXYZ
6 ABCDEFGHIJKLMNOPQRSTUVWXYZ
5 ABCDEFGHIJKLMNOPQRSTUVWXYZ

12 abcdefghijklmnopqrstuvwxyz.,'-;/ $1234567890
11 abcdefghijklmnopqrstuvwxyz.,'-;/ $1234567890
10 abcdefghijklmnopqrstuvwxyz.,'-;/ $1234567890
9 abcdefghijklmnopqrstuvwxyz.,'-;/ $1234567890
8 abcdefghijklmnopqrstuvwxyz.,'-;/ $1234567890
7 abcdefghijklmnopqrstuvwxyz $1234567890
6 abcdefghijklmnopqrstuvwxyz $1234567890
5 abcdefghijklmnopqrstuvwxyz $1234567890

LINE WIDTH

5 mil.
8 mil
10 mil.
13 mil.
15 mil.
20 mil.
30 mil.
50 mil.

Gray Scale

0 1 2 3 4 5 6 7 8 9 10 11 12 13 14 15 16 17 18 19

Gray Side . . . 18% Reflectance

White Side . . . 90% Reflectance

ca...n.com

Index

20-valve engine (to 03/90 prod.)

A/C compressor cut-out
- checking 24-160

Air mass sensor
- checking 24.60

Carbon canister solenoid valve
- checking 24-80

Coolant temperature sensor
- checking 24-90

Engine speed sensor
- checking 24-120

Fuel consumption rate indicator
- checking 24-150

Fuel injectors
- checking 24-50

Fuel pressure
- checking 24-40

Fuel pump relay
- checking 24-70

Idle switch
- checking/adjusting 24-110

Idle speed and CO content
- checking/adjusting 24-180

Idle stabilization system
- checking 24-190

MPI (multi-point injection) control unit
- checking 24-200

MPI fuel injection system
- component layout 24-210

Oxygen sensor system
- checking 24-170

Potentiometer
- checking 24-100

Safety precautions
- rules of cleanliness 24-20
- safety measures 24-20

Speed signal (vehicle speed)
- checking 24-140

Tachometer signal
- checking 24-130

Technical data
- fuel pressure and settings 24-30

cardiagn.com

CIS-E Motronic (combined fuel and ignition system), repairing

Engine code: 3A

Note

The CIS-E Motronic control unit is equipped with a fault memory system. Before performing repairs, adjustments, or troubleshooting, activate the fault memory system — see Repair Group D2 for additional information.

CAUTION

Control limits are sometimes exceeded during checking and adjustment work. These over-limits are recognized as faults by the control unit and stored in the Permanent Fault Memory.

Be sure to erase the Permanent Fault Memory system after all checking and adjustment work has been performed. See Repair Group D2.

Note

The fuel injection part of the CIS-E Motronic is handled in Repair Group 25. Components of the ignition system such as distributor, ignition coil, etc. are found in Group 28.

cardiagn.com

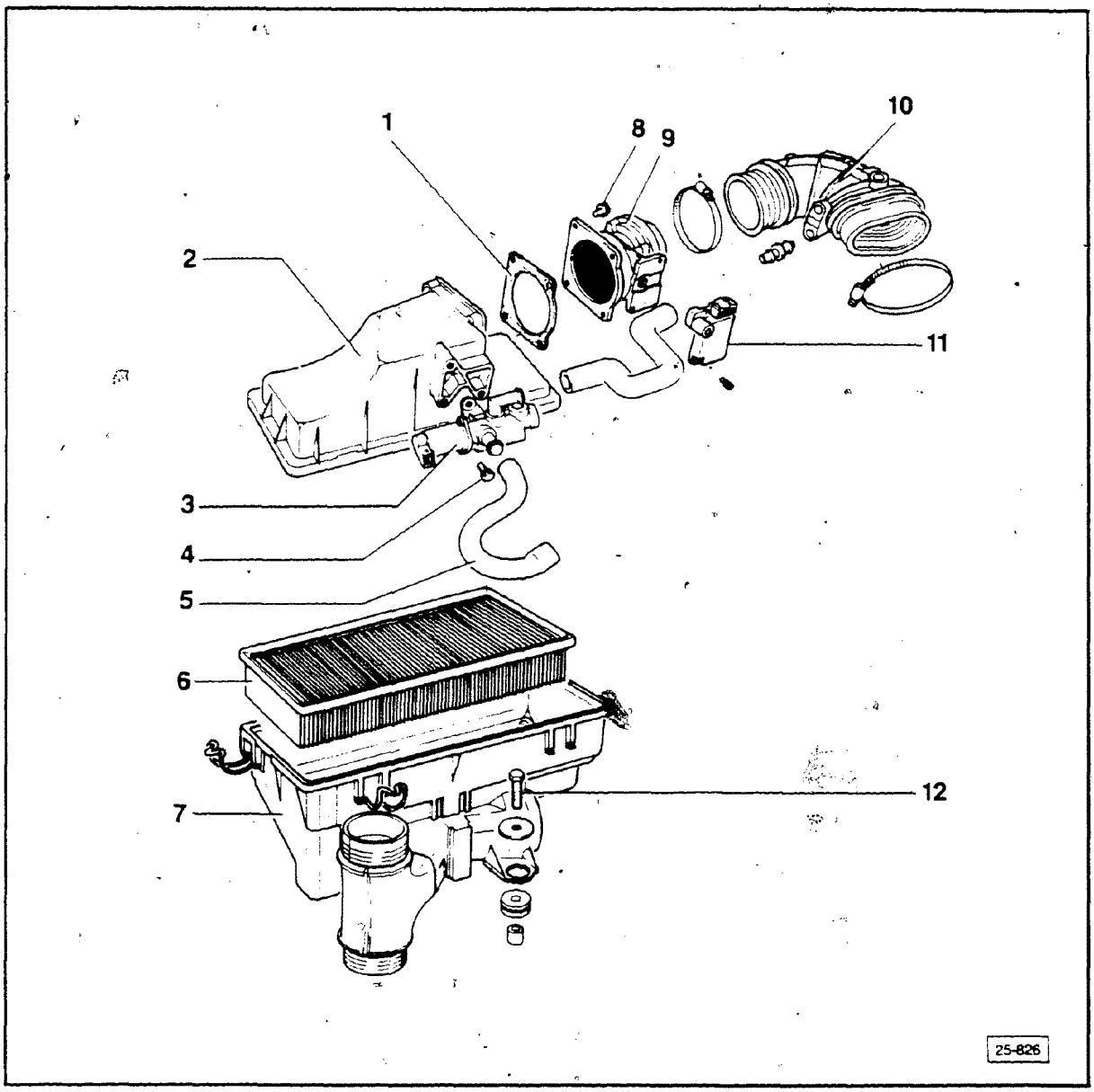

1 — Gasket

2 — Air filter housing, upper section

3 — Idle stabilizer valve

4 — 10 Nm (7 ft lb)

5 — Hose

6 — Air filter element

7 — Air filter housing, lower section

8 — 10 Nm (7 ft lb)

9 — Air mass sensor housing

10 — Intake air boot

11 — Air mass sensor

12 — 15 Nm (11 ft lb)

Note

Replace gaskets as necessary.

cardiagn.com

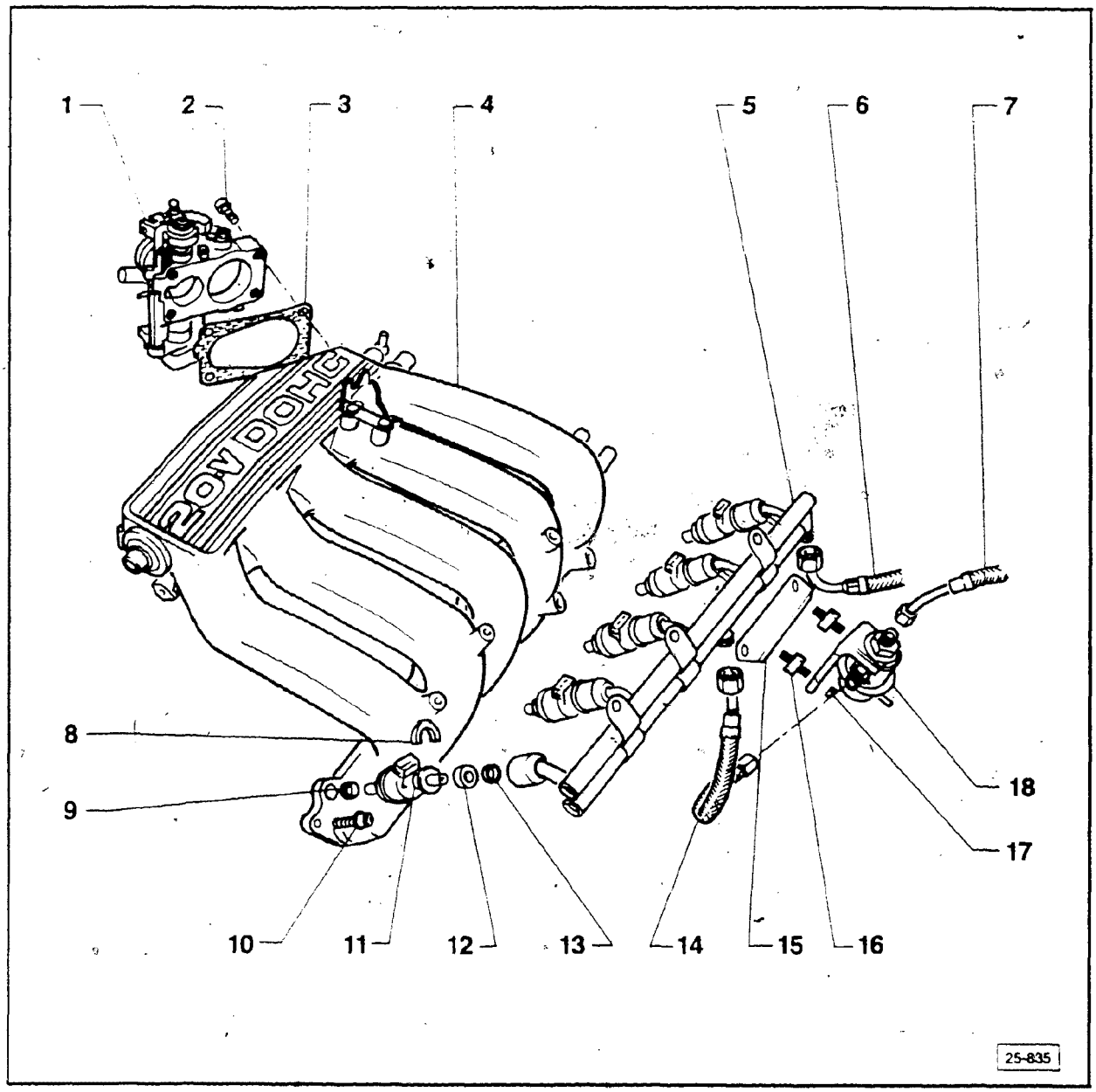

- safety measures, section 24-20
- cleaning, section 24-20
- system pressure testing, section 24-40

1 — **Throttle body**
Potentiometer switch, checking/adjusting, see section 24-100
Idle-switch, checking/adjusting, see section 24-110

2 — **20 Nm (15 ft lb)**

3 — **Gasket**

4 — **Intake manifold**

5 — **Fuel rail**

6 — **Fuel supply line**

7 — **Fuel return line** (to control pressure regulator)

8 — **retaining clip** for fuel injector

9 — **Gasket**

10 — **20 Nm (15 ft lb)**

11 — **Fuel injector**
Checking section 24-50

12 — **Fuel filter element**

cardiagn.com

13 — **Gasket**

14 — **Fuel return line** (to fuel tank)

15 — **Fuel line cover**

16 — **Bushing** (rubber bonded)

17 — **10 Nm (7 ft lb)**

18 — **Control pressure regulator**

cardiagn.com

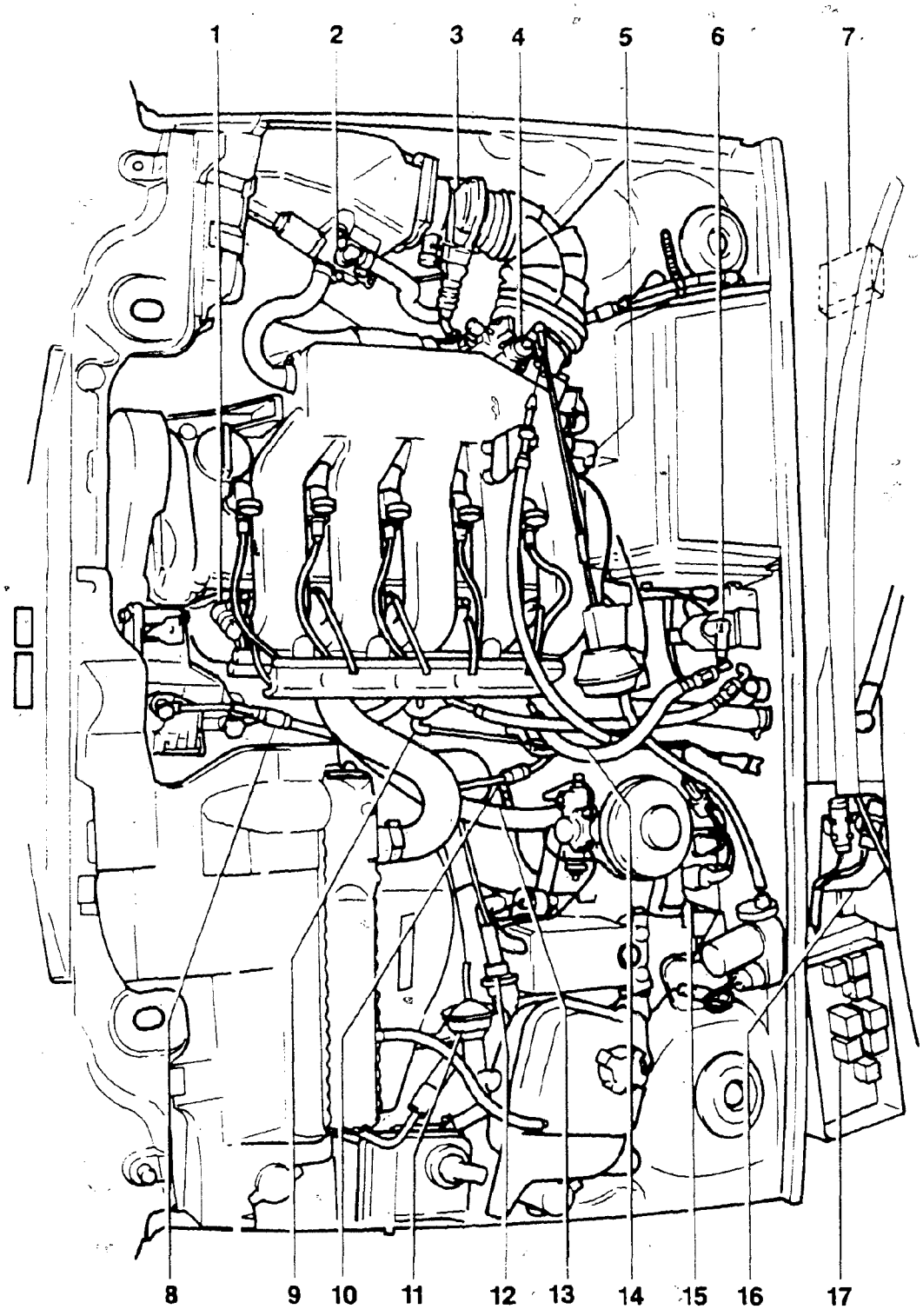

cardiagn.com

MPI fully-electronic engine management system, component layout

Note safety measures and Rules of Cleanliness section 24-20.

Note

Multimeter **US 1119**, LED tester **US 1115** and the **VW 1594** adaptor kit are required for testing.

1 — **Fuel injector**
control, checking, section 24-50

2 — **Idle stabilizer valve**
control, checking, section 24-190

3 — **Air mass sensor**
checking, section 24-60

4 — **Throttle body potentiometer**
checking, section 24-100

5 — **Coolant temperature sensor**
checking, section 24-90

6 — **Ignition coil with power output stage**
checking, see Repair Group 28

7 — **MPI control unit**
supply voltage, checking, section 24-200
coding connector, checking section 24-200

8 — **Knock sensor I — 10 Nm (7 ft lb)**

9 — **Knock sensor II — 10 Nm (7 ft lb)**

10 — **Ignition timing sensor**
checking, see Repair Group 28

11 — **Carbon canister shut-off valve**
checking, see Repair Group 20

12 — **Carbon canister solenoid valve**
control, checking, section 24-80

13 — **Engine speed sensor**
checking, section 24-120

14 — **Ignition distributor with Hall Sensor**
basic setting and installation see Repair Group 28

15 — **Connector bracket**

16 — **Series resistors pack**
checking, section 24-50

17 — **Fuel pump relay**
control, checking, section 24-70

cardiagn.com

Rules of Cleaniness

CAUTION

When working on the fuel supply/injection system, carefully observe the following rules:

1 Thoroughly clean connection and surrounding areas before loosening connection.

2 After removing components, place in clean area and cover with foil or paper. Avoid using rags!

3 Components which have been opened or disassembled must be carefully covered or sealed if repair cannot be carried out immediately.

4 Install clean parts only:
- do **NOT** remove replacement parts from package until time of installation
- do **NOT** use spare parts that have been stored loose or unpackaged (e.g. in tool boxes, etc.)

5 When fuel system is open:
- avoid using compressed air whenever possible
- avoid moving the vehicle whenever possible

cardiagn.com

Safety measures

CAUTION

Observe the following precautions to prevent personal injury as well as possible damage to the ignition system components.

- switch **OFF** the ignition before connecting or disconnecting components or test equipment
- do **NOT** crank engine before high tension wire of ignition distributor (terminal **4**) is connected to ground
- do **NOT** use battery booster longer than one minute nor should 16.5 volts be exceeded
- do **NOT** wash engine unless ignition is switched **OFF**
- disconnect **BOTH** battery terminals whenever arc or spot welding
- before towing, vehicles with a defective ignition system (or where this is suspected) must have terminal **1** (green) of the ignition coil disconnected
- do **NOT** connect a condenser of any kind to terminal **1** of the ignition coil
- when installing noise suppressors, **ONLY** use 1000 ohms for high tension wires and 5000 ohms for spark plug connectors
- do **NOT** replace distributor rotor (marked **R1**) with a different type
- if the vehicle is heated up (e.g. in a painting booth) do **NOT** start the engine until it has had sufficient time to return to room temperature

cardiagn.com

Technical data

System pressure		3.8 to 4.2 bar (55 to 61 psi)
Residual pressure	minimum after 10 minutes	3.2 bar (46.4 psi)
	minimum after 20 minutes	3.0 bar (43.5 psi)
Fuel injector delivery volume (per 20 seconds)		100 to 120 ml
Idle speed*		800 ± 50 rpm
CO content*		0.5 to 1.0% volume

CAUTION

Idle speed and CO content are interrelated and **MUST** be checked and adjusted together.

*Requirements
- perform vehicle self disgnosis see Repair Group D2 for additional information.
- engine warm, oil temperature 80°C (176°F) minimum
- throttle valve in idle position
- all electrical consumers switched **OFF**
- pressure gauges **NOT** connected
- radiator fan **NOT** running while taking any readings

cardiagn.com

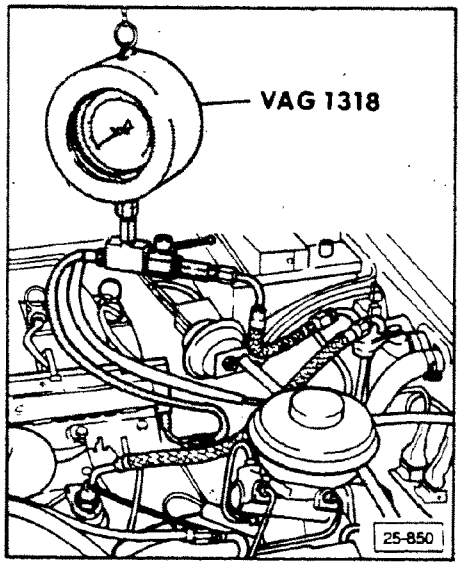

Fuel pressure, checking

- connect pressure gauge **VAG 1318** between fuel rail and fuel supply line, with pressure gauge lever in **OPEN** position

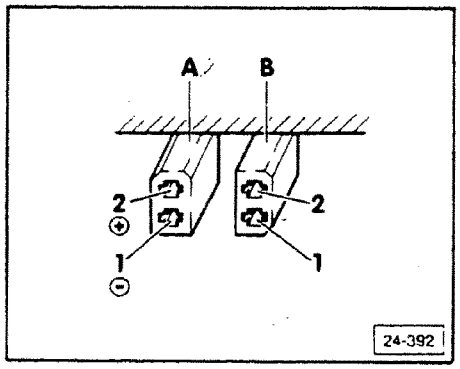

System pressure, checking

- bridge diagnostic connector **A** terminal **1** and diagnostic connector **B** terminal **1** using jumper from **VW 1594** adaptor kit

Note

Diagnostic connectors **A** and **B** are located in the recess beneath the shelf in the footwell on the driver's side.

- switch **ON** ignition
- after 4 seconds (minimum) remove jumper from diagnostic connectors
  - must be 3.8 to 4.2 bar (55 to 61 psi)
  - fuel pump **MUST** be running (audible)

> **CAUTION**
>
> The fuel control pressure regulator is more audible than the fuel pump, do not confuse the two sounds.

If fuel pump is **NOT** running
- check fuel pump relay and controls if necessary, section 24-70

If specified pressure is **NOT** obtained
- replace control pressure regulator on a trial basis and repeat test

cardiagn.com

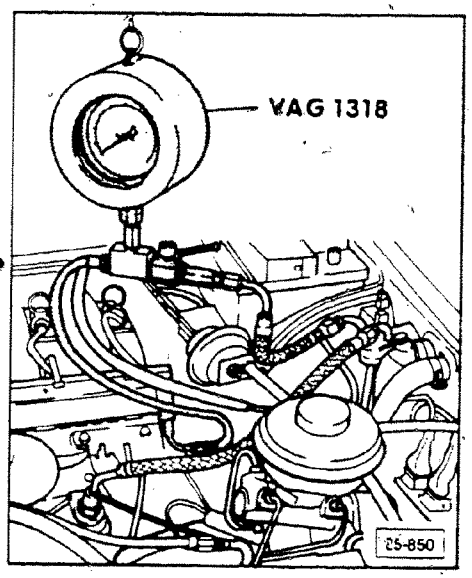

If specified value is still **NOT** obtained
- check fuel pump and/or fuel supply line for damage (possibly pinched), repair or replace as necessary

If specified pressure is exceeded
- connect pressure gauge **VAG 1318** between fuel rail and control pressure regulator (substituting short return line)
- repeat pressure check
  - must be 3.8 to 4.2 bar (55 to 61 psi)

If specified pressure is obtained
- replace fuel rail

If measured pressure is below specifications
- replace control pressure regulator

If pressure value exceeds specifications
- check return lines for damage (e.g. pinched areas) replace as necessary

Residual pressure, checking

- switch **OFF** ignition
- observe pressure on gauge; wait 10 minutes and observe gauge pressure again
  - must be 3.4 bar (49.3 psi) minimum

If pressure is below specification
- check fuel lines and connections for leakage; correct as necessary

If **NO** leakage is detected
- replace fuel pump check valve (see Repair Group 20)

cardiagn.com

Fuel injectors, checking

Note

First perform vehicle self diagnosis as outlined in Repair Group D2.

If as a displayed result of the self diagnosis actuation:
one or several fuel injectors are **NOT** being controlled, perform the following checks

Electrical checking

> **CAUTION**
>
> The fuel injectors are operated via a series resistor network which limits the amount of current to the fuel injectors. **DO NOT** try to check the fuel injectors by applying battery voltage.

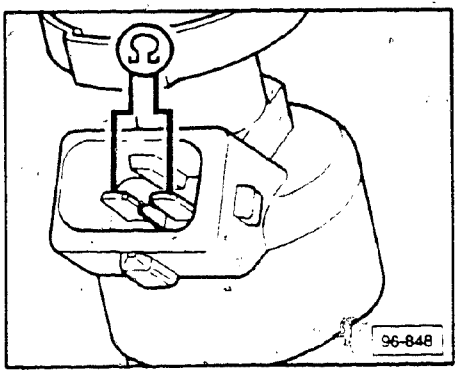

- remove harness connector from fuel injector to be tested
- switch multimeter **US 1119** to resistance range
- connect multimeter to both terminals of fuel injector
  - must be 1 to 3 ohms

If **NO**
- replace fuel injector

Voltage supply, checking

Requirements
- Fuel pump relay **OK**
- Fuel pump relay control function **OK**
- Fuse **13 OK**

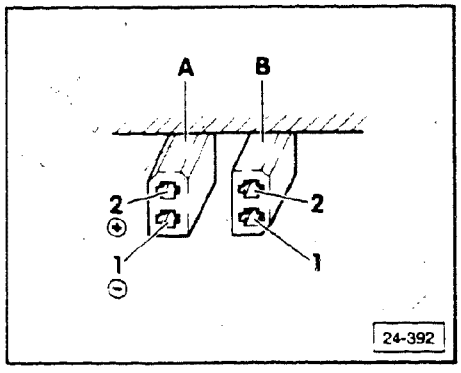

- bridge diagnostic connector **A** terminal **1** and diagnostic connector **B** terminal **1** using jumper from **VW 1594** adaptor kit

Note

Diagnostic connectors **A** and **B** are located in the recess beneath the shelf in the footwell on the driver's side.

cardiagn.com

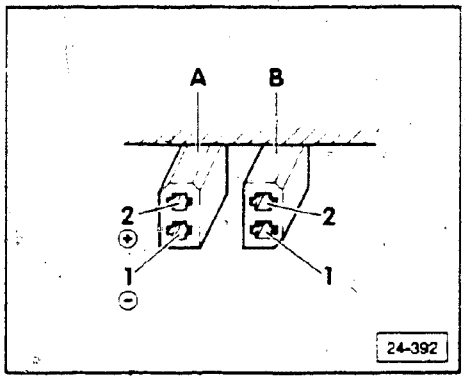

- switch **ON** ignition
- after 4 seconds (minimum) remove jumper from diagnostic connectors

CAUTION

The fuel injectors are operated via a series resistor network which limits the amount of current to the fuel injectors. **DO NOT** try to check the fuel injectors by applying battery voltage.

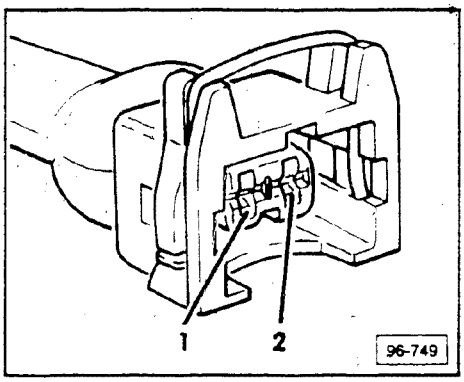

- remove harness connector from fuel injector to be tested
- switch multimeter **US 1119** to 20 volt range
- connect multimeter to terminal **2** and ground
  - must be approximately 12 volts

If **YES**
- check fuel injector control page 24-50-4

If **NO**
- check series resistors page 24-50-3

If series resistors are **OK**
- using wiring diagram check wiring from fuel injector harness connector (including terminals) to the series resistors module and from series resistors module via fuse **13** to fuel pump relay
- eliminate any shorts or opens as necessary

cardiagn.com

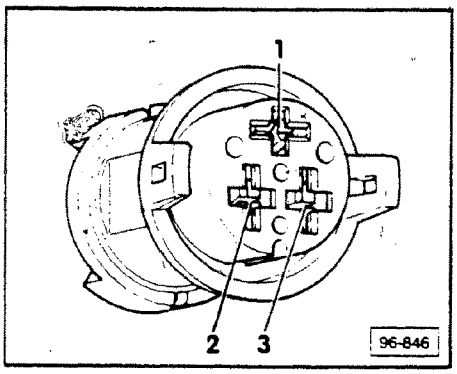

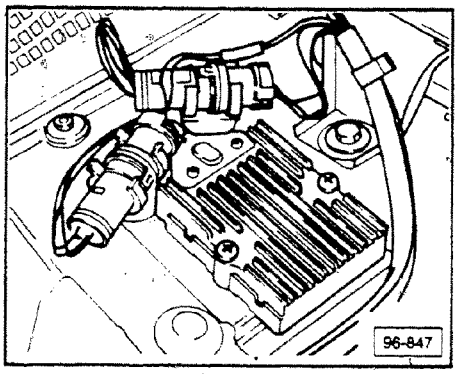

Resistor pack connectors, terminal identification

Gray connector:
terminal **1**: voltage supply from fuse **13**
terminal **2**: to fuel injector cylinder **1**
terminal **3**: to fuel injector cylinder **2**

Brown connector:
terminal **1**: to fuel injector cylinder **3**
terminal **2**: to fuel injector cylinder **4**
terminal **3**: to fuel injector cylinder **5**

Resistor pack, checking

- disconnect gray and brown connectors from series resistors module
- switch multimeter **US 1119** to resistance range
- connect multimeter in sequence between the white wire and each of the remaining 5 black wires
  - must be 5.0 to 7.0 ohms for the entire set of readings

If **NO**
- replace resistor pack

cardiagn.com

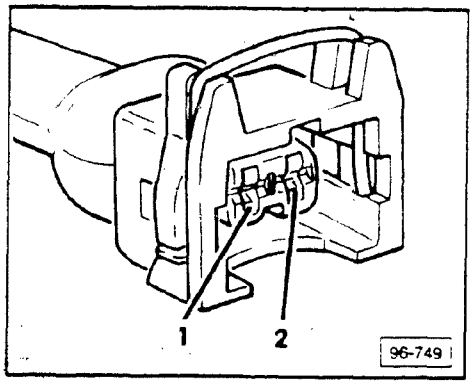

Control, checking

- remove harness connector from fuel injector to be tested
- connect **US 1115** LED tester between terminal **1** of harness connector and battery positive using **VW 1594** adaptor kit
- momentarily activate starter
  - LED tester must flash

If **NO**, check for open circuit as follows

- expose MPI control unit by removing foot well cover beneath glove box

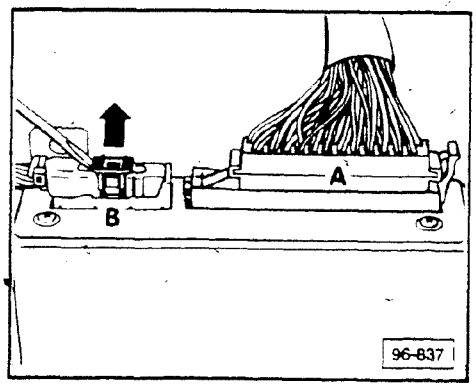

- remove control unit harness connector **A**
- disconnect fuel injector harness connector from fuel injector to be tested

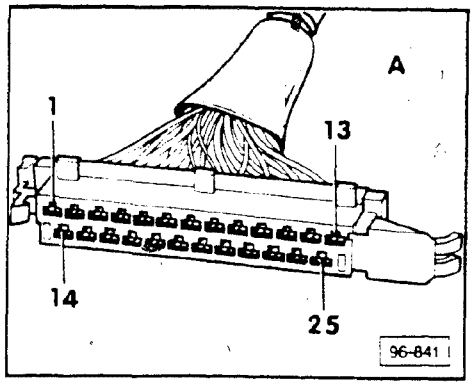

- switch multimeter **US 1119** to *resistance* range
- check continuity between wires in control unit harness connector **A** and terminal **1** of fuel injector harness connector being checked as follows

Connector **A** terminal #		Fuel injector harness connector for cylinder #
3	↔	Cyl. **1**
4	↔	Cyl. **2**
5	↔	Cyl. **3**
16	↔	Cyl. **4**
17	↔	Cyl. **5**

If continuity is **NOT** obtained

- eliminate open circuit in wiring using wiring diagram

If continuity **IS** obtained

- replace MPI control unit

cardiagn.com

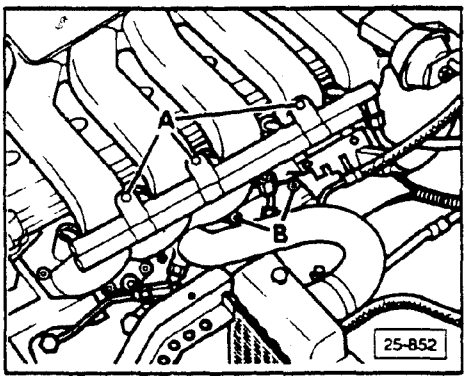

Injection quantity, comparative measurement

- remove fuel rail assembly (mounting bolts **A**) complete with injectors but do **NOT** disconnect fuel lines
- remove pressure regulator with bracket from manifold (mounting bolts **B**)
- remove hose clamp on rear of intake manifold and (if installed) bracket for cruise control vacuum reservoir

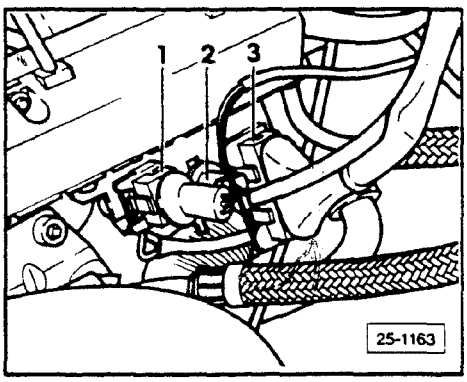

- disconnect harness connectors **1**, **2** and **3** on intake manifold
- disconnect coil wire from distributor cap and connect to ground using adaptor from **VW 1594** kit
- expose fuel injector connector terminals by pushing back rubber boots on fuel injector harness connectors while leaving connected
- insert fuel injectors into **VAG 1602** analyzer (for volume measurement)

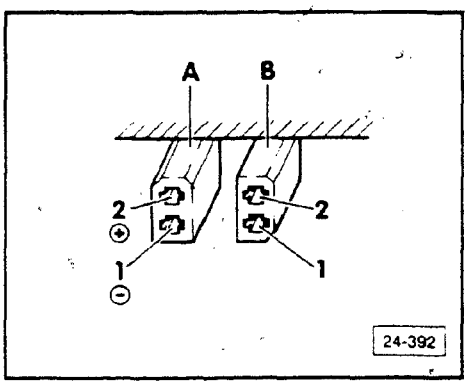

- bridge diagnostic connector **A** terminal **1** and diagnostic connector **B** terminal **1** using jumper from **VW 1594** adaptor kit

Note

Diagnostic connectors **A** and **B** are located in the recess beneath the shelf in the footwell on the driver's side.

- switch **ON** ignition
- after 4 seconds (minimum) remove jumper from diagnostic connectors
- visually inspect tip of fuel injectors for leakage

Note

When the fuel pump is running, only 1 to 2 drops per minute (per valve) are permitted to leak.

If leakage is greater
- switch **OFF** ignition
- replace defective fuel injector

cardiagn.com

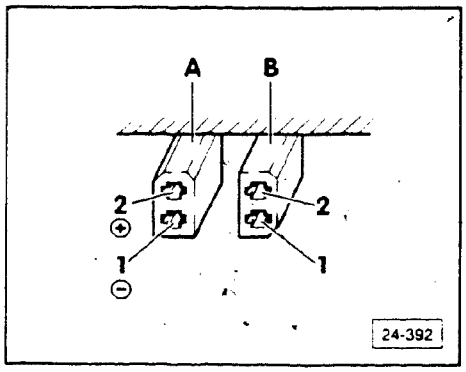

- bridge diagnostic connector **A** terminal **1** and diagnostic connector **B** terminal **1** using jumper from **VAG 1594** adatpor kit
- switch **ON** ignition
- after 4 seconds (minimum) remove jumper from diagnostic connectors

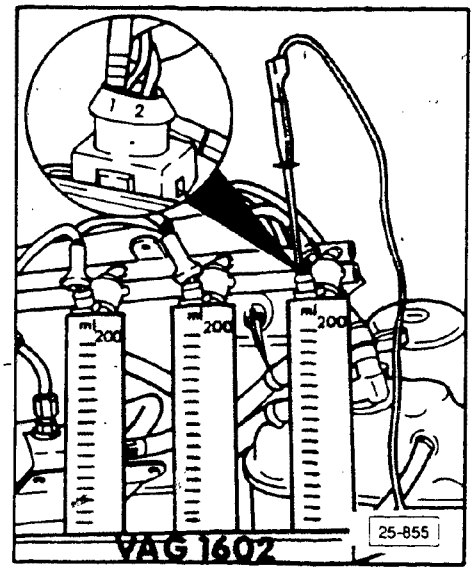

- connect brown wire of exposed fuel injector harness connector to ground using jumper from **VW 1594** adaptor kit

Note

This step is performed for each fuel injector in sequence for a duration of 20 seconds per injector.

- after 20 seconds must be 100 to 120 ml of fuel in **VAG 1602**

If fuel quantity for one or more injectors is above or below specification

- replace defective fuel injectors(s)

If quantity of all 5 injectors is above or below specification

- check system pressure, section 24-40

cardiagn.com

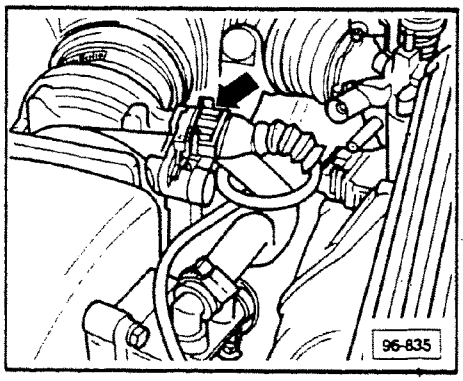

Air mass sensor, checking

Requirement
- fuse 27 is **OK**

Supply voltage, checking:

- remove air mass sensor harness connector (**arrow**)

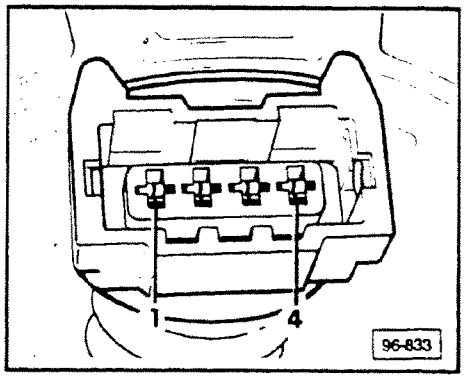

- switch multimeter **US 1119** to 20 volt range
- connect multimeter between terminal **3** and engine ground
- switch **ON** ignition
  - approximately 12 Volts

If voltage value is **NOT** obtained
- check wiring using wiring diagram
- connect multimeter between terminals **3** and **2**
  - approximately 12 volts

connect multimeter between terminals **2** and **4**
- approximately 8 Volts

If voltage values **ARE** obtained
- check function of air mass sensor, page 24-60-3

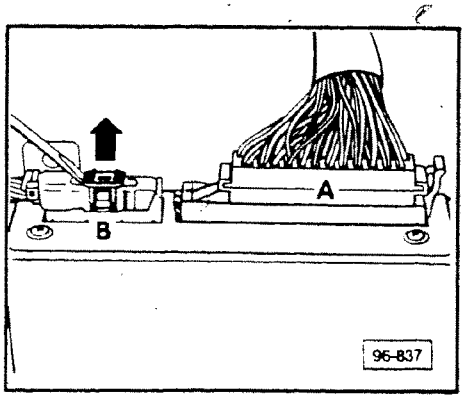

If one of the voltage values is **NOT** obtained
- check wiring between (yellow) control unit harness connector **B** and 4-pin connector of air mass sensor
- remove foot-well cover under glove compartment
- pry open secondary lock (black) and remove control unit harness connector **B**

cardiagn.com

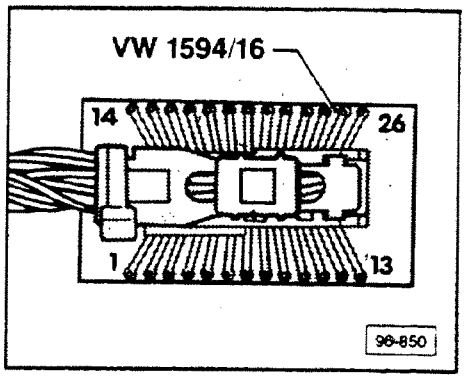

- connect measuring adaptor **VW 1594/16** to control unit harness connector **B**
- switch multimeter **US 1119** to resistance range
- check continuity between adaptor and 4-pin connector

Connector, 4-pin		Measuring adaptor
1	⟷	3
2	⟷	6
2	⟷	16
4	⟷	4

- approximately 0 ohms (continuity)

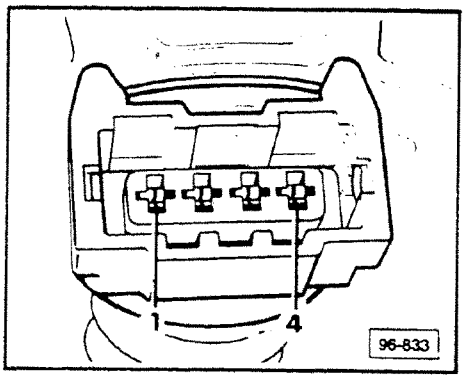

If continuity (for all 4 measurements) is **NOT** obtained

- check wiring using wiring diagram, repair as necessary

If continuity **IS** obtained for all 4 measurements

- check air mass sensor

Note

The connector cavities are correspondingly numbered on the rear side of the connector (under the protective cap).

cardiagn.com

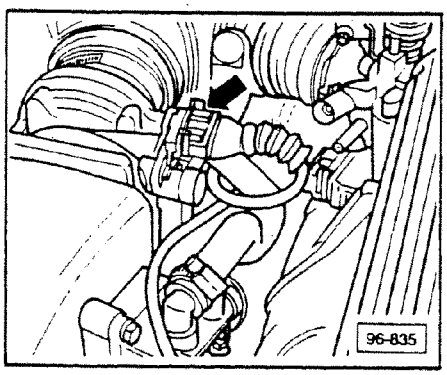

Function, checking

- push back protective cap (leaving air mass sensor connected)
- switch **ON** ignition
- switch multimeter **US 1119** to 20 volt range
- connect multimeter between terminals **2** and **4**
  - approximately 1.0 to 7.5 volts

If voltage value is **NOT** obtained
- replace air mass sensor potentiometer
- connect multimeter between terminals **1** and **2**
- switch **ON** ignition
  - 0.3 to 1.1 volts

- start engine, switch **OFF** all electrical consumers (radiator cooling fan must **NOT** be running during measurements)
- continuously vary engine speed between idle and 4000 RPM
  - voltage must vary between 1.5 and 3.4 volts, depending on RPM

If voltage values are **NOT** obtained
- replace air mass sensor

cardiagn.com

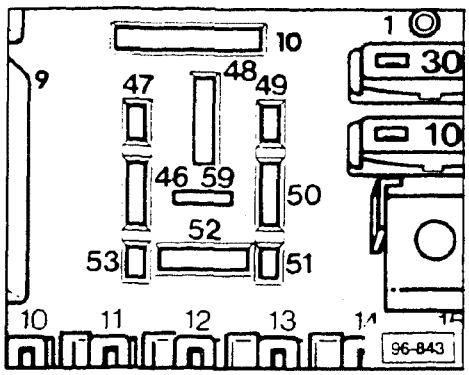

Fuel pump relay, checking

Control, Checking

- remove fuel pump relay from fuse relay panel, cavity **10**
- switch **ON** ignition

- switch **US 1119** multimeter to 20 volt range
- connect multimeter between terminal **46** and ground then terminal **48** and ground
  - each must be approximately 12 volts

If voltage value is **NOT** obtained
- eliminate open circuit in wiring using wiring diagram

- switch **OFF** ignition
- connect **US 1115** LED tester between terminals **46** and **47**
- switch **ON** ignition
  - LED tester must light up for approximately 1 second

If **YES**
- replace fuel pump relay

If **NO**, check wiring as follows
- expose MPI control unit by removing foot well cover beneath glove box
- remove control unit harness connector **A**

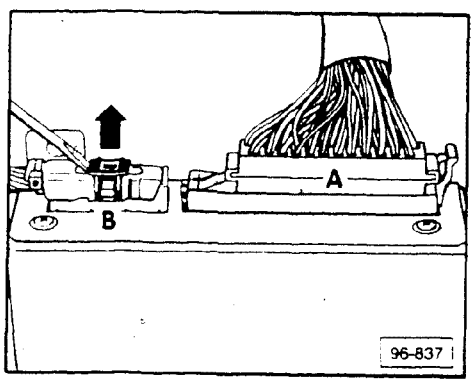

- switch multimeter **US 1119** to resistance range

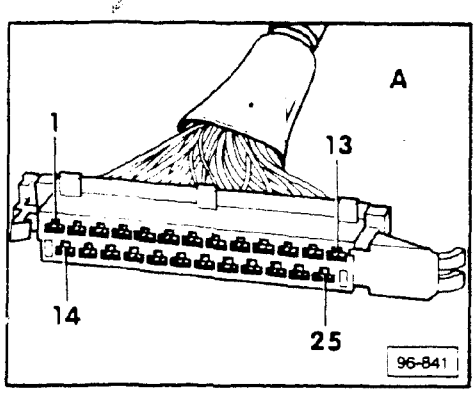

- check continuity between terminal **7** of control unit harness connector **A** and terminal **47** of relay cavity **10** on fuse relay panel
  - must be 0.0 to 0.8 ohms (continuity)

If continuity is **NOT** obtained from **BOTH** measurements
- eliminate open circuit in wiring using wiring diagram

If continuity **IS** obtained from **BOTH** measurements
- replace MPI control unit

cardiagn.com

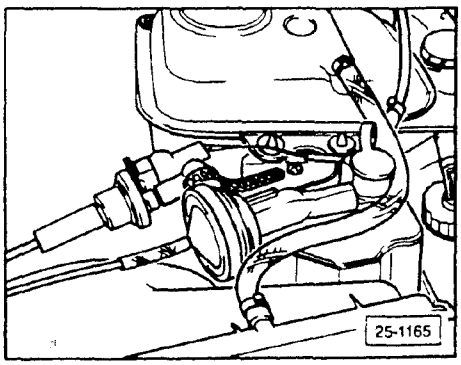

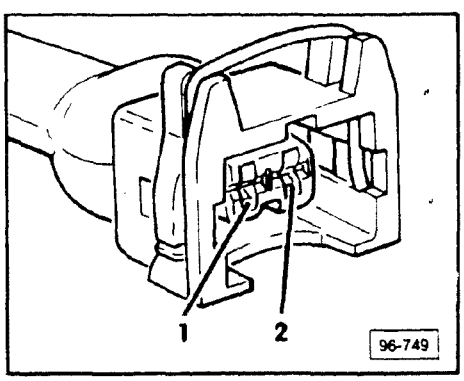

Carbon canister solenoid valve, checking

- perform vehicle self diagnosis and call up code **4343** for carbon canister solenoid valve, see Repair Group D2 for additional information
  - solenoid **MUST** click **ON** and **OFF** when full throttle switch is closed

If **NO**

- disconnect harness connector from solenoid valve

- connect **US 1115** LED tester to terminals **1** and **2** of harness connector using **VW 1594** adaptor kit
  - LED tester must flash

If **YES**

- replace solenoid valve

If **NO**

- switch multimeter **US 1119** to 20 volt range
- connect multimeter between terminal **1** of harness connector and ground
  - must be approximately 12 volts

If **NO**

- eliminate open circuit in wiring using wiring diagram

cardiagn.com

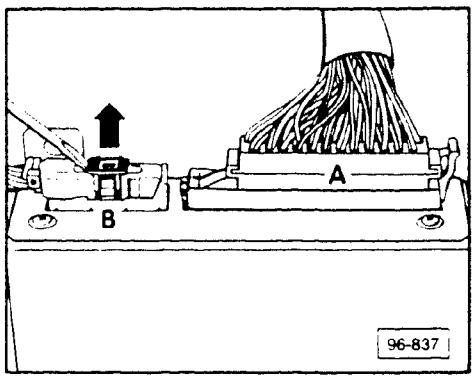

If voltage **IS** obtained perform following check

- expose MPI control unit by removing footwell cover beneath glove box
- remove control unit harness connector **A**
- switch multimeter **US 1119** to resistance range

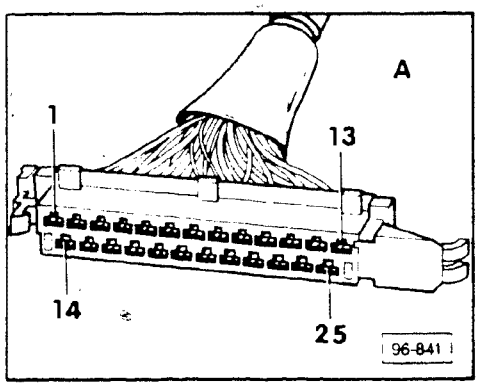

- check continuity between terminal **20** of control unit harness connector **A** and terminal **2** of carbon canister solenoid valve harness connector

If continuity is **NOT** obtained

- eliminate open circuit in wiring using wiring diagram

If continuity **IS** obtained

- replace MPI control unit

cardiagn.com

CONTINUED IN THE

BEGINNING OF NEXT ROW

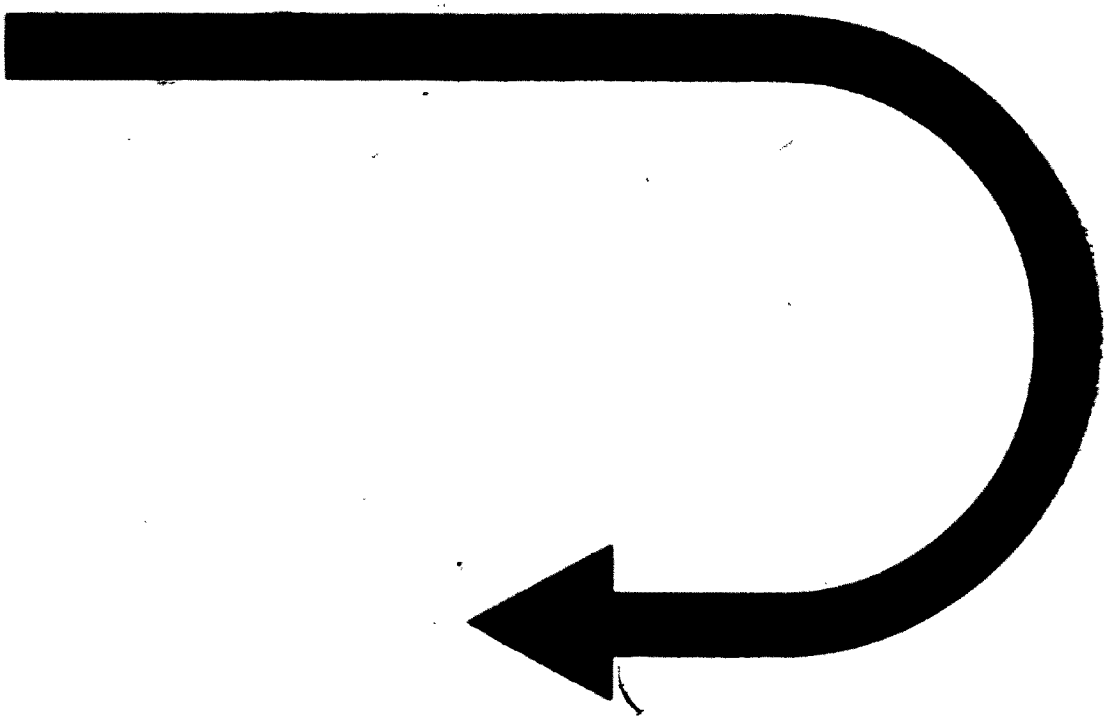

cardiagn.com

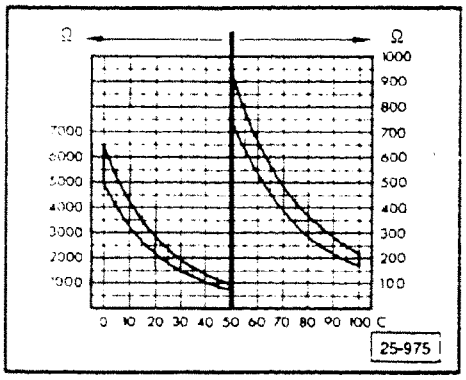

Coolant temperature sensor, checking

Requirements
- coolant temperature 20°C (68°F) minimum

- remove harness connector from coolant temperature sensor
- switch multimeter **US 1119** to resistance range
- connect multimeter between the two coolant temperature sensor terminals and compare resistance (Ω) reading with chart

Note

Coolant temperature sensor on rear of cylinder head is an NTC type (negative temperature coefficient), resistance decreases as engine temperature increases.

Example:
approximately 2400 ohms @ 20°C (68°F) coolant temperature, approximately 310 to 320 ohms @ 80°C (176°F) coolant temperature.

If resistance values are **NOT** obtained
- replace coolant temperature sensor

If the specified values **ARE** obtained
- check wiring from sensor to MPI control unit as follows
- remove foot-well cover under glove compartment
- remove control unit harness connector **A**

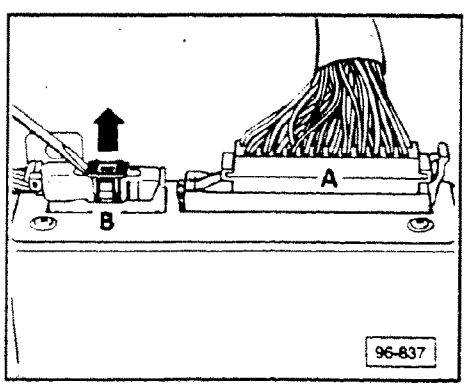

cardiagn.com

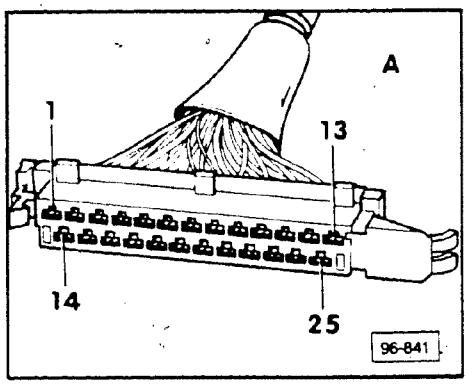

- check continuity between control unit harness connector **A** and 2-pin harness connector of coolant temperature sensor

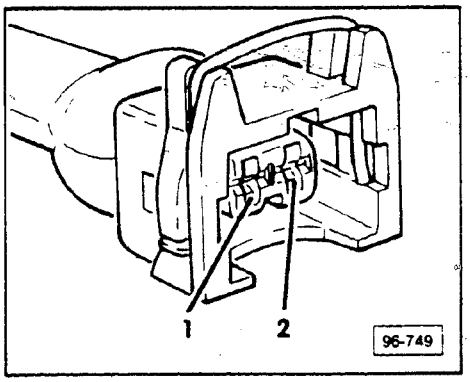

2-pin connector		Connector A on control unit
1	←——→	11
2	←——→	15

- approximately 0 ohms (continuity)

If resistance values are **NOT** obtained
- repeat continuity test reversing test leads at two-pin connector

If resistance values are still **NOT** obtained
- check wiring using wiring diagram

If resistance values **ARE** obtained
- replace MPI control unit

cardiagn.com

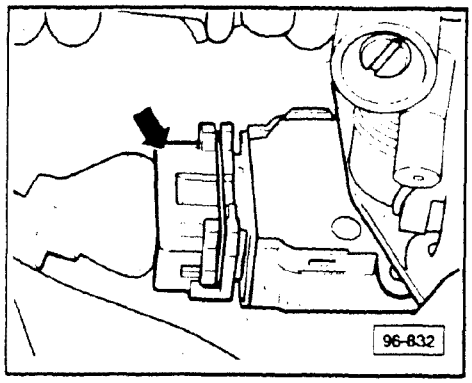

Potentiometer, checking

Supply voltage, checking

- remove throttle potentiometer harness connector (**arrow**)
- switch ignition **ON**
- switch multimeter **US 1119** to 20 volt range

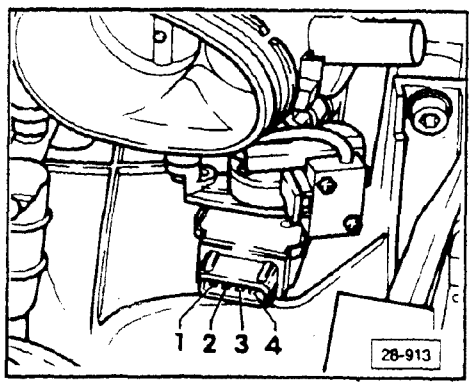

- connect multimeter between terminals **2** and **4** then terminals **3** and **4**
  - approximately 5 volts for each reading

If one of the voltages is **NOT** obtained
- check wiring between (yellow) control unit connector **B** and 4-pin connector

If both voltage readings **ARE** obtained
- check throttle potentiometer and idle switch

cardiagn.com

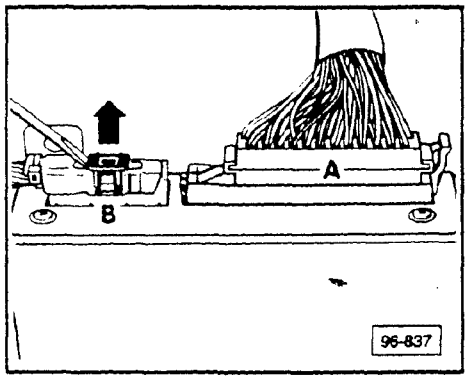

- remove foot-well cover under glove compartment
- pry open secondary lock (black) of control unit harness connector **B** and remove

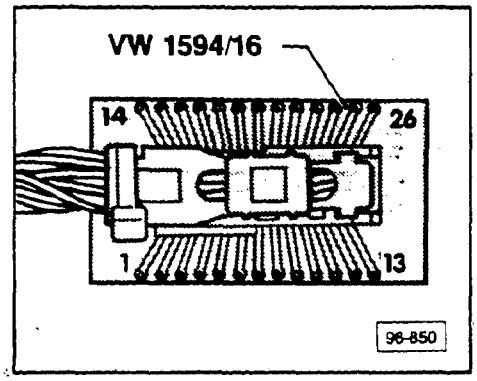

- connect measuring adaptor **VW 1594/16** to harness connector **B**

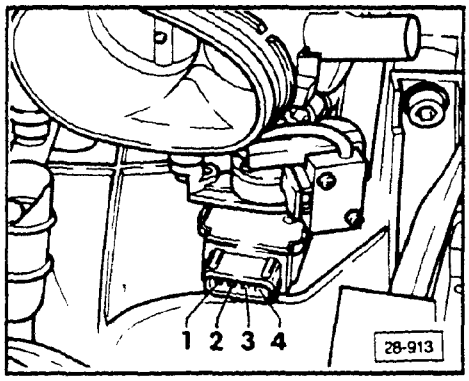

- check continuity between measuring adaptor and 4-pin connector

4 pin connector		VW 1594/16 Measuring adaptor
2	⟷	21
3	⟷	10
4	⟷	9

- approximately 0 ohms (continuity)

If continuity is **NOT** obtained
- check wiring according to wiring diagram

If continuity **IS** obtained
- replace MPI control unit

cardiagn.com

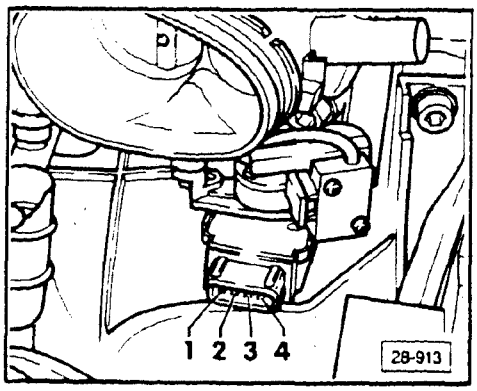

Electrical checking

- remove harness connector from throttle potentiometer
- remove intake air boot
- switch multimeter **US 1119** to resistance range
- connect multimeter between terminals **1** and **3**
  - 3000 to 6500 ohms
- connect multimeter between terminals **2** and **3**
  - 3000 to 6000 ohms
- fully open throttle lever
  - 0 to 600 ohms

If any of the resistance values are **NOT** obtained

- replace potentiometer

cardiagn.com

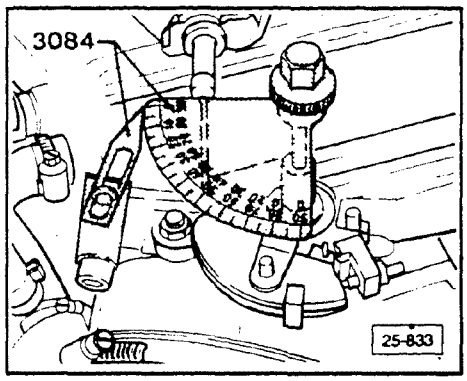

Switch, checking

- attach **3084** protractor pointer to throttle body
- install protractor **3084** onto throttle shaft
- switch multimeter **US 1119** to resistance range

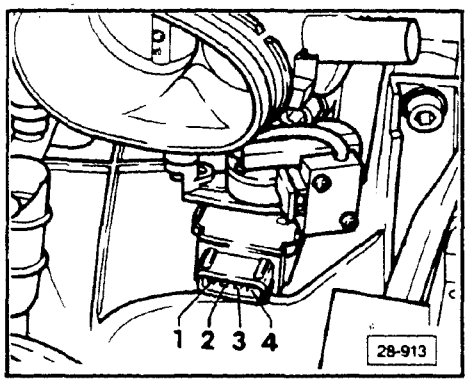

- connect multimeter between terminals **3** and **4** of throttle switch
- "zero" protractor and pointer
- open throttle approximately 20°, then close slowly
  - switching point (continuity): 1.5-2.5°

If continuity is **NOT** obtained
- adjust potentiometer switch

If still **NOT OK**
- replace potentiometer switch

Note

The throttle body must first be removed to adjust or replace the potentiometer switch.

Switch, adjusting

- remove throttle body
- switch multimeter **US 1119** to resistance range
- connect multimeter between terminals **3** and **4** of potentiometer switch

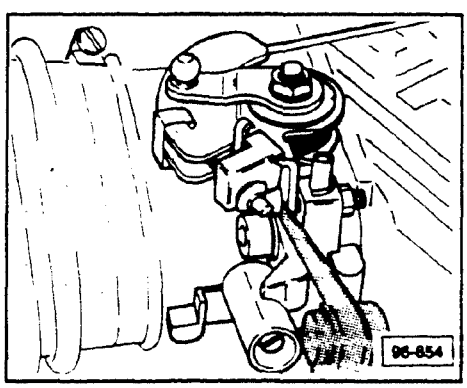

- loosen throttle switch mounting screws
- position switch in slots so that it opens straight when inserting 0.75 mm (0.030 in.) feeler gage between set screw and stop
  - feeler gage inserted: Infinite ohms (open)
    feeler gage removed: 0 ohms (continuity)
- tighten mounting screws and re-check adjustment

cardiagn.com

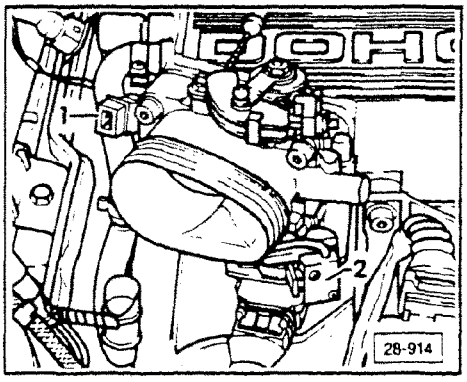

Idle switch, checking and adjusting

Checking

- remove idle switch harness connector (on throttle)
- switch multimeter **US 1119** to resistance range
- connect multimeter between terminals of switch 1
  - throttle closed: approximately 0 ohms
    throttle open: Infinite ohms

If resistance values are **NOT** obtained
- check wiring

If wiring **OK**
- adjust or replace throttle switch

Wiring to control unit, checking

- remove idle switch harness connector (on throttle)
- remove foot-well cover under glove compartment

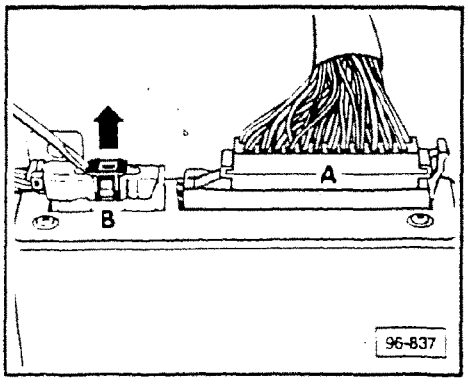

- pry open secondary lock (black) of control unit harness connector **B** and remove

more

cardiagn.com

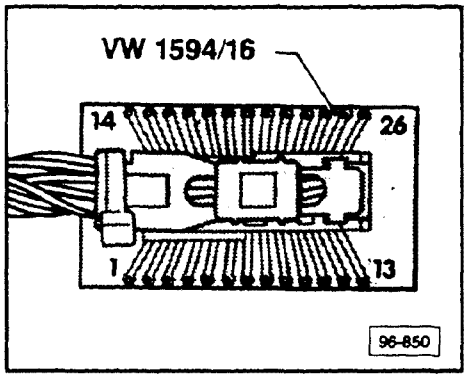

- connect measuring adaptor **VW 1594/16** to harness connector **B**

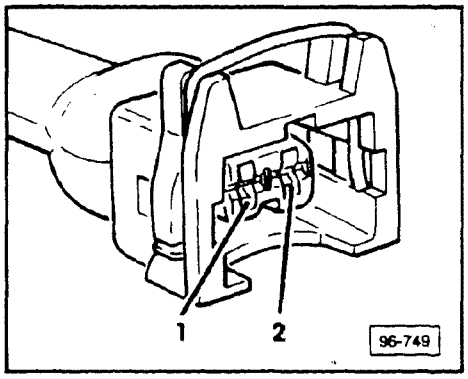

- check continuity with multimeter

Connector B on control unit		Harness Connector for idle switch
21	⟷	2
22	⟷	1

- must not be greater than 1 ohm

If continuity is **NOT** obtained
- check wiring using wiring diagram, repair as necessary

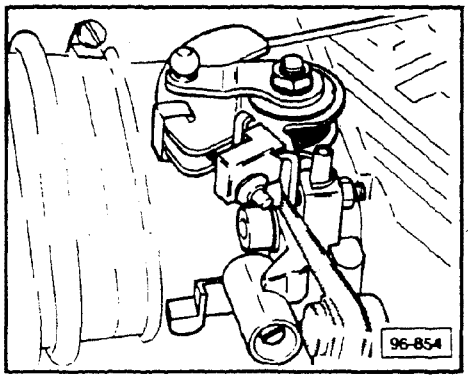

Adjusting

- connect multimeter and protractor assembly as described on page 24-100-4
- open throttle slightly and insert a 0.5 mm (0.020 in.) feeler gage between stop and lever
- close throttle
  - Infinite ohms (open)
- remove feeler gage
  - 0 ohms (continuity)
- carefully re-insert feeler gage between stop, but do **NOT** open throttle any more than necessary to insert feeler gage
  - Infinite ohms (open)

If resistance value is **NOT** obtained
- adjust idle switch
- loosen idle switch mounting screws and position switch in slots to that idle switch opens straight when inserting the 0.4 mm (0.016 in.) feeler gage between set screw and stop
- tighten mounting screws

cardiagn.com

Engine-speed sensor, checking

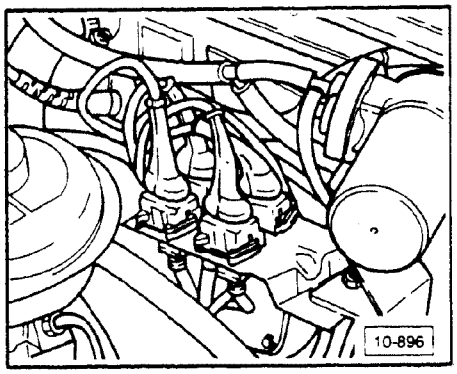

- separate gray connector (left side engine compartment near plenum) and remove from bracket (sensor side of cable color marked)
- switch multimeter **US 1119** to resistance range

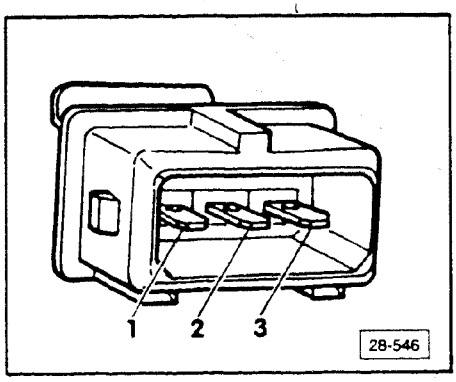

- connect multimeter between terminals **1** and **2** of speed sensor connector
  - approximately 1000 ohms

If **NO**
- replace engine speed sensor

If **YES**
- connect multimeter first between terminals **1** and **3** then between **2** and **3**
  - Infinite ohms (open)

If **NO**
- replace engine speed sensor

If **YES**
- check wiring between sensor harness connector and control unit harness connector **B** as follows
- remove foot-well cover under glove compartment

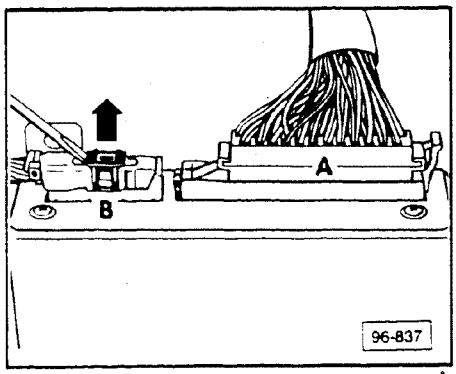

- pry open secondary lock (black) of control unit harness connector **B** and remove

cardiagn.com

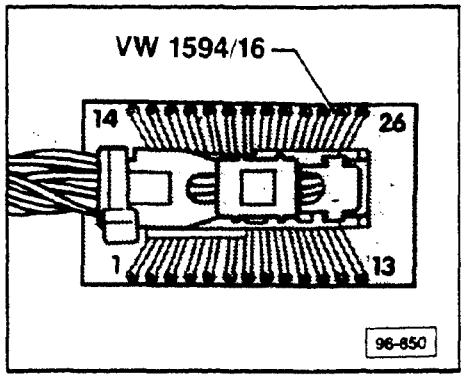

- connect measuring adaptor **VW 1594/16** to control unit harness connector **B**
- switch multimeter **US 1119** to resistance range

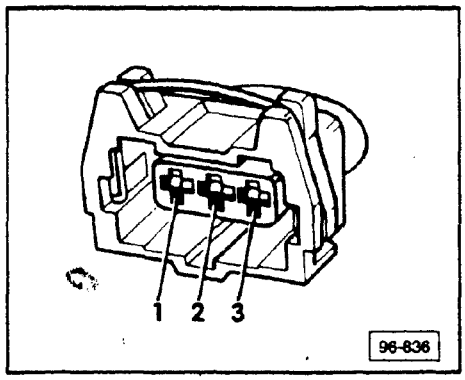

- check continuity between sensor connector and measuring adaptor

Sensor connector		Measuring adaptor
1	⟷	13
2	⟷	25
3	⟷	25

- approximately 0 ohms

If resistance values are **NOT** obtained
- check wiring using wiring diagram

If resistance values **ARE** obtained
- check teeth on flywheel ring gear for damage

If there is **NO** damage
- replace MPI control unit

cardiagn.com

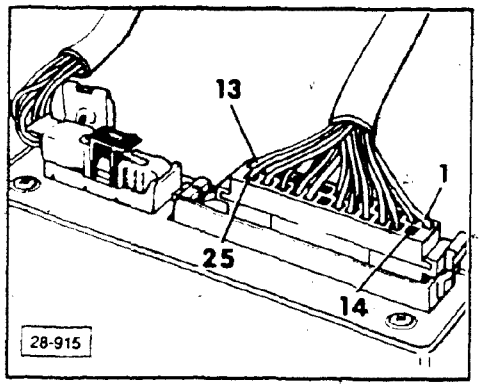

Tachometer signal, checking

- connect **VAG 1367** engine tester to measure RPM
- remove foot-well cover under glove compartment
- switch multimeter **US 1119** to **20 Volts AC** range
- connect multimeter between terminals **1** and **10**
- start engine and let run at idle
  - approximately 4.0 to 10.0 volts **AC**

If voltage value is **NOT** obtained
- remove instrument cluster and remove (yellow) **26** pin harness connector
- start engine and let run at idle
  - 1 to 2 volts **AC**

If voltage value is **NOT** obtained
- replace MPI control unit

If voltage value **IS** obtained but vehicle tachometer does not indicate same RPM as **VAG 1367**
- check wiring from terminal **10** of harness connector **A** on MPI control unit to tachometer (in instrument cluster) using wiring diagram

If wiring **OK**
- continue troubleshooting instrument cluster see Repair Group 90 for additional information

cardiagn.com

Speed signal, checking

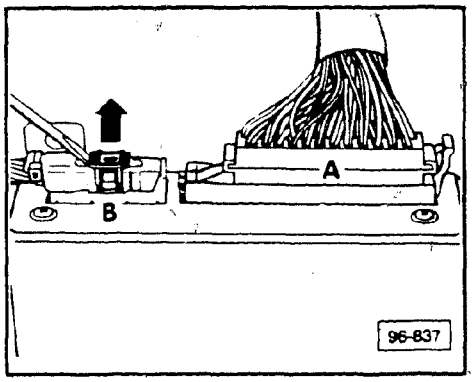

Requirement
- fuse **27 OK**

- remove foot-well cover under glove compartment
- remove harness connector **A**

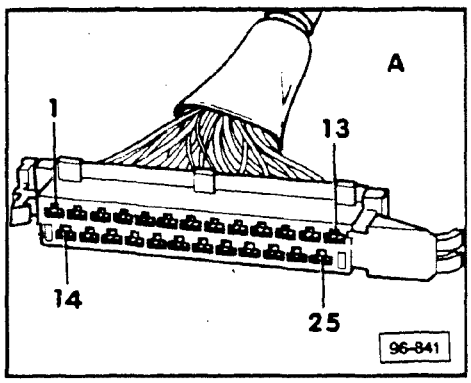

- connector **US 1115** LED tester between terminals **14** and **25** using **VW 1594** adaptor kit
- raise front/left part of vehicle, until wheel is lifted off ground
- switch **ON** ignition
  - **US 1115** must light up at about half brightness
- turn left front wheel slowly by hand
  - **US 1115** must flash (become brighter)

If **US 1115** does **NOT** light up or flash
- check wiring of terminal **14** to instrument cluster using wiring diagram

If wiring **OK**
- continue checking using: troubleshooting guide "speed signal, checking" and wiring diagrams

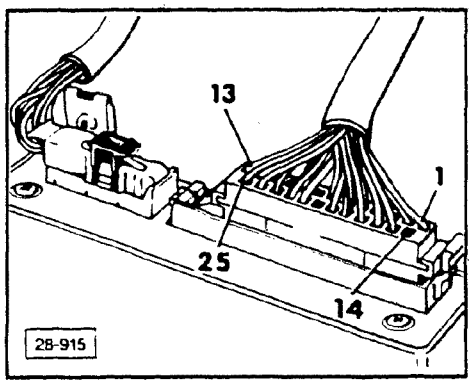

If **US 1115** lights up and flashes
- switch **OFF** ignition and re-connect control unit harness connector **A**
- connect **US 1115** between terminals **14** and **25**
- switch **ON** ignition
  - diode testing lamp must light up at about half brightness
- turn left front wheel slowly by hand
  - **US 1115** must flash (become brighter)

If **US 1115** does **NOT** light up or flash although no fault was apparent with connector **A** removed while checking
- replace MPI control unit

cardiagn.com

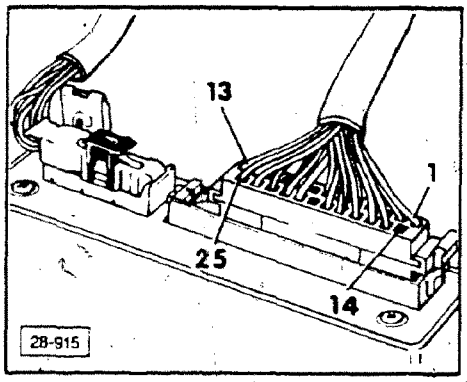

Fuel consumption rate indicator (On Board Computer), checking

- remove foot-well cover under glove compartment
- switch multimeter **US 1119** to 20 volt range
- connect multimeter between terminals **1** and **23**

- start engine and let run while continuously changing engine speed between 1000 and 4000 RPM
  - approximately 0.3 to 0.8 volts (corresponding to RPM)

If voltage value is **NOT** obtained
- remove instrument cluster
- remove black 10-pin connector for on-board computer
- start engine and let run at idle
  - approximately 0.1 to 0.3 volts

If voltage value is **NOT** obtained
- check wiring between terminal **23** of connector **A** and on-board computer

If voltage value is still **NOT** obtained
- replace MPI control unit

cardiagn.com

A/C compressor cut-out, checking

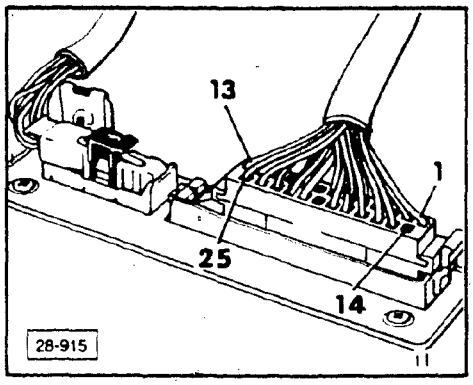

Requirement
- A/C system **OK**

Remove foot-well cover under glove compartment.

- connect multimeter between terminals **1** and **24** of MPI control unit harness connector
- switch **ON** ignition
- switch **ON** climate control (operating mode AUTO)
  - after approximately 6 seconds voltage must rise from zero to 10-12 volts
- quickly depress accelerator pedal fully and hold down
  - voltage must decrease for about 12 seconds to 0. . . 1 volts and then rise again to 10. . . 12 volts

Note

If accelerator pedal was released sooner, the time period of the voltage drop is reduced to a minimum 3 seconds.

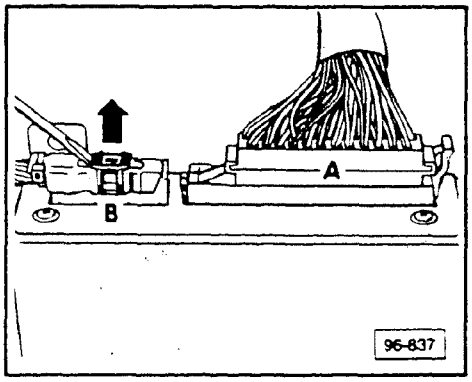

If voltage values are **NOT** obtained
- switch **OFF** ignition
- remove connector **A** from MPI control unit

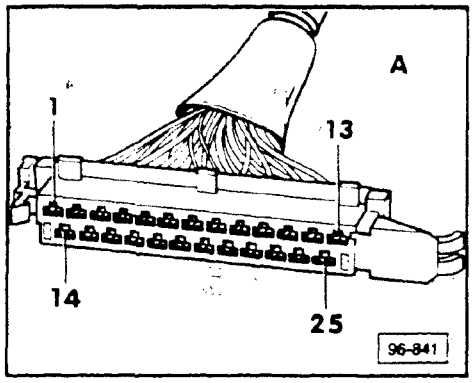

- check continuity of wiring (bridge) from terminal **8** to terminal **24** using multimeter and wiring diagram
- eliminate any open circuits, if necessary

cardiagn.com

- ensure that correct MPI control unit and compressor clutch control relay are installed

Note

The compressor clutch control relay is in the (left) auxiliary relay panel under the instrument panel, see groups for wiring diagrams, troubleshooting electrical system and installation locations.

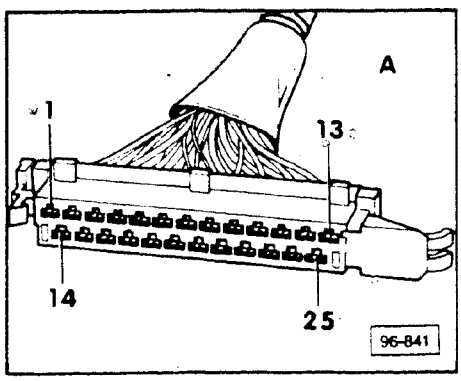

- switch multimeter **US 1119** to 200 mA range and connect between terminals **1** and **24**
- switch **ON** ignition
- switch **ON** climate control (operating mode AUTO)
  - approximately 30 to 35 mA

If current value is **NOT** obtained
- check wiring from terminal **24** to compressor clutch control relay for continuity or short-circuit using wiring diagram

Note

If there is a positive (+) short-circuit, it would damage the MPI control unit.

If wiring **OK**
- replace compressor clutch control relay

If current value **IS** obtained when checking with harness connector **A** removed **BUT** the specified values are **NOT** obtained with harness connector **A** connected
- replace MPI control unit

cardiagn.com

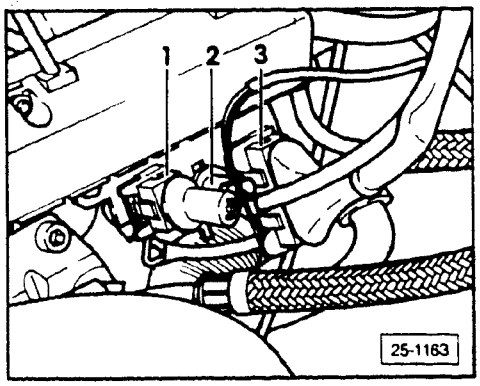

Oxygen sensor system, checking

Oxygen sensor heating, checking

- disconnect harness connector **1** for Oxygen sensor heating (next to intake manifold)
- switch multimeter **US 1119** to 20 volt range

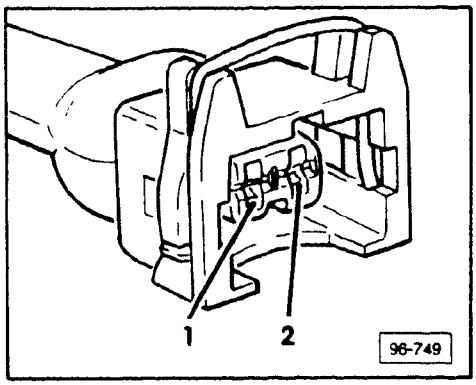

- connect multimeter between terminals **1** and **2** of harness connector
- start engine and allow to idle
  - must be approximately 12 volts
- switch **OFF** ignition

If voltage value **NOT** obtained
- check fuse **28** and if necessary eliminate open circuit using wiring diagram

If voltage value **IS** obtained
- connect test adaptor **VW 1315A/1** between OXS heater harness connector **1** and heater connector
- connect an ammeter, with a range of zero to 10 amps, to test adaptor **VW 1315A/1**
- switch **ON** ignition
  - must be 0.5 to 3.0 amps (current decreases as sensor heats up)

If amperage value is **NOT** obtained
- replace Oxygen sensor

Oxygen sensor control, checking

- disconnect harness connector **2** for Oxygen sensor signal (next to intake manifold)
- switch multimeter **US 1119** to 2 volt range
- connect multimeter between harness connector and ground
- switch **ON** ignition
  - must be 400 ± 50 mV

cardiagn.com

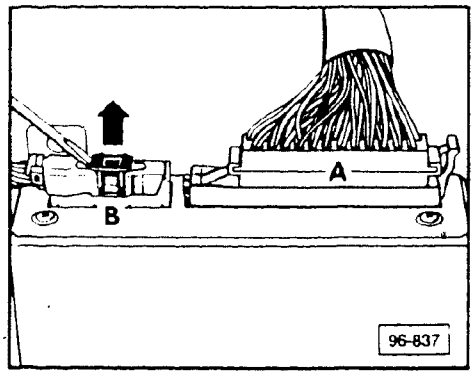

If **NO**

- expose MPI control unit by removing footwell cover beneath glove box
- pry open secondary lock (black) of control unit harness connector **B** and remove

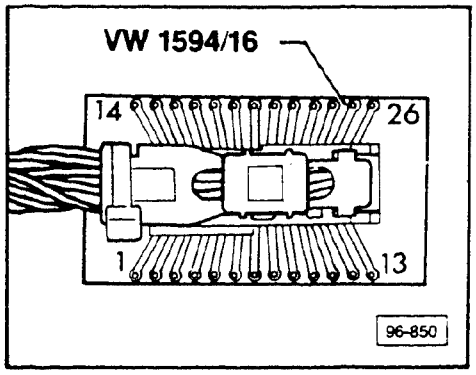

- attach harness connector **B** to test adaptor **VW 1594/16**
- switch multimeter **US 1119** to resistance range
- check continuity between terminal **7** of test adaptor **VW 1594/16** and OXS signal wire (harness side) in engine compartment

If continuity **IS** obtained

- replace MPI control unit

If continuity is **NOT** obtained

- check wiring for open circuit using wiring diagram and repair as necessary

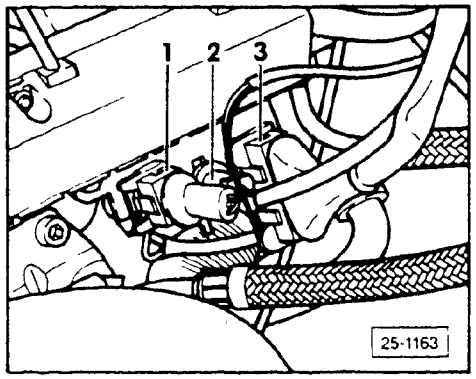

Oxygen sensor, removing/installing

- disconnect Oxygen sensor harness connectors **1** and **2** (next to intake manifold)
- unscrew Oxygen sensor (at base of exhaust manifold)

CAUTION

Oxygen sensor threads **MUST** be coated with an anti-sieze compound before installing. If the sensor has not already been coated in production, carefully apply a coating to the sensors' threads taking extreme care **NOT** to allow anti-sieze compound into the sensor slots.

- when installing Oxygen sensor
  - torque to 50 Nm (37 ft lb)

cardiagn.com

Idle speed and CO content, checking/adjusting

CAUTION

Idle speed and CO content are interrelated and **MUST** be checked and adjusted together.

Requirements

- perform vehicle self diagnosis, see Repair Group D2 for additional information
- engine warm, oil temperature 80°C (176°F) minimum
- throttle valve against stop
- all electrical consumers switched **OFF**
- pressure gauges **NOT** connected
- radiator fan **NOT** running while taking any readings
- **VAG 1367** connected

CAUTION

VAG 1367 TDC sensor **MUST** be fully inserted into transmission housing.

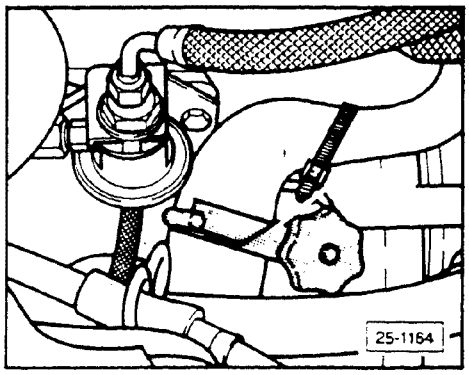

- clamp crankcase ventilation hose together (behind fuel pressure regulator)
- remove oil dipstick and cover tube with a lint free rag (to prevent oil spray)
- remove cap from CO tap tube
- connect **Sun EPA 105** CO tester to CO tap tube
- start engine and allow to idle

cardiagn.com

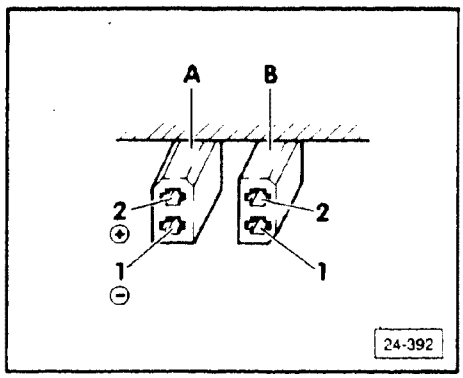

- bridge diagnostic connector **A** terminal **1** and diagnostic connector **B** terminal **1** using jumper from **VAG 1594** adaptor kit

Note

Diagnostic connectors **A** and **B** are located in the recess beneath the shelf in the footwell on the driver's side.

- check idle speed
  - must be 800 ± 50 RPM

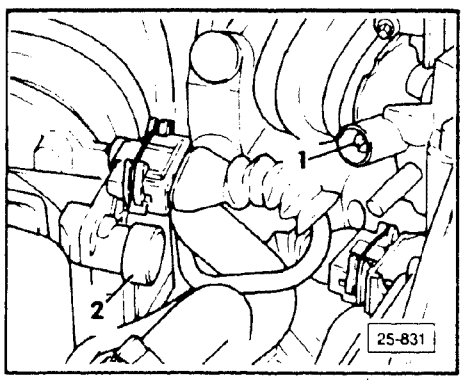

If **NO**

- adjust idle speed to specification using adjustment screw **1**

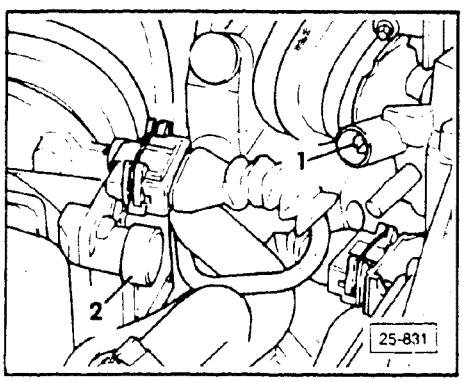

CO content, checking

- with engine at idle observe CO content on **Sun EPA 105** CO tester
  - must be 0.5 to 1.0 volume %

If **NO**

- adjust CO content using CO adjustment screw **2** as follows
- switch **OFF** ignition

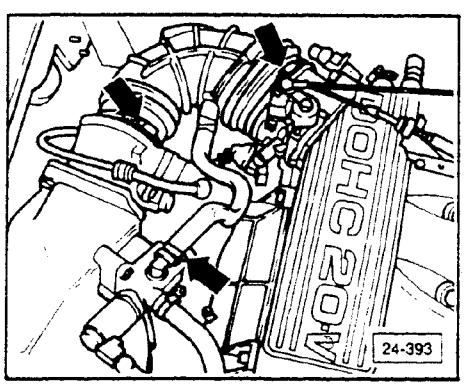

- loosen clamps on intake air boot (upper **arrows**)
- remove intake air boot

Note

When re-installing, be sure that the intake air boot fully seats onto the flange recesses before tightening the clamps.

cardiagn.com

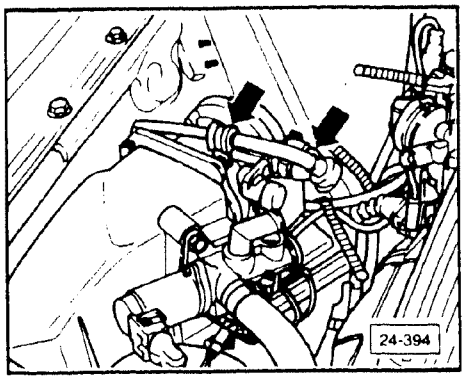

- remove cable clamp (**left arrow**) and disconnect harness connector from air mass sensor (**right arrow**)

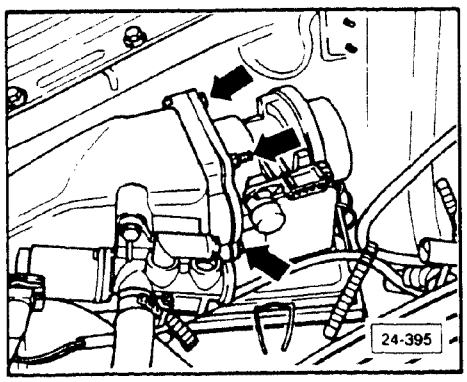

- remove 4 mounting bolts from air mass sensor (**arrows**)
  - installing torque: 10 Nm (7 ft lb)
- remove plug covering CO adjustment screw as follows
- **VERY LIGHTLY** center punch plug
- drill using 2.5 mm (3/32 in) drill bit
- thread in a 3 mm self tapping screw
- remove plug by pulling on the screw with pliers
- re-install air mass meter

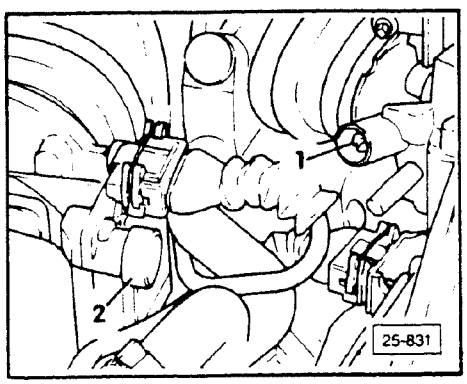

CO content, adjusting

- start engine and let idle
- observe CO content on **Sun EPA 105** CO tester
  - must be 0.5 to 1.0 volume %

If **NO**

- rotate adjustment screw **2** as necessary to obtain specified value
  - Clockwise rotation: CO content increases
    Counter-clockwise: CO content decreases
- after adjusting CO content, check idle speed, correct if necessary
- after idle speed and CO content have been adjusted, disconnect jumper from diagnostic connectors
- briefly raise engine speed above 2000 RPM then let idle
  - idle speed and CO content **MUST** meet specifications

If values deviate from specifications

- perform vehicle self-diagnosis again

If **OK**

- disconnect test equipment
- install new plug over CO adjustment screw

cardiagn.com

Idle Stabilization system, checking

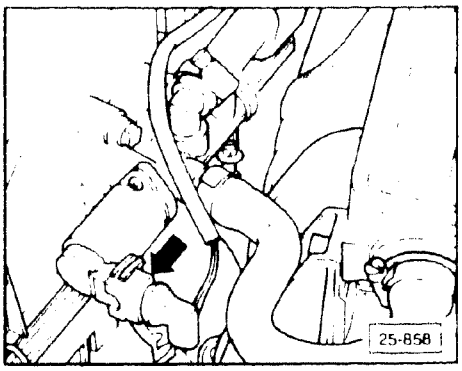

- perform vehicle self diagnosis and call up idle stabilizer valve, code **4431**, see Repair Group D2 for additional information
  - stabilizer valve must click

If **NO**

- disconnect idle stabilizer valve harness connector (**arrow**)

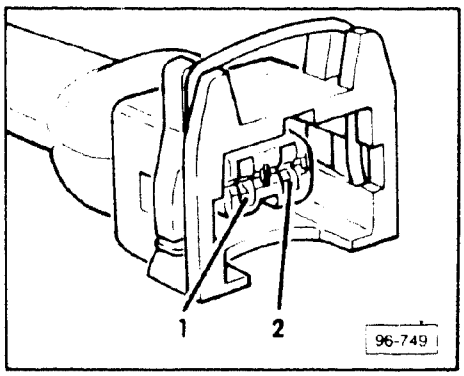

- connect **US 1115** LED tester between terminals **1** and **2** of idle stabilizer valve harness connector
  - LED tester must flash

If **YES**

- replace idle stabilizer valve

If **NO**

- switch multimeter **US 1119** to 20 volt range
- connect multimeter between terminal **1** and ground
  - must be approximately 12 volts

If **NO**

- check fuse **28**, if necessary eliminate open circuit in wiring using wiring diagram

cardiagn.com

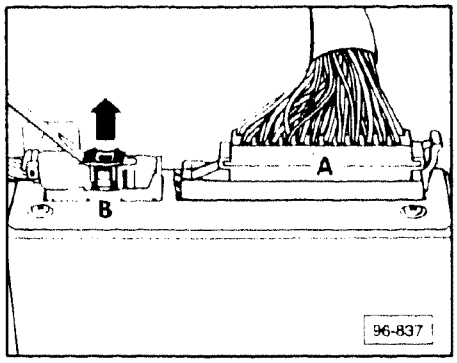

If voltage value **IS** obtained
- switch **OFF** ignition
- remove footwell cover below glove box
- disconnect MPI control unit harness connector **A**
- switch multimeter **US 1119** to resistance range

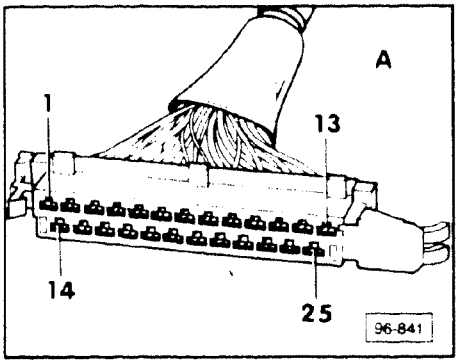

- check for continuity between terminal **19** of connector **A** and terminal **2** of idle stabilizer valve harness connector

If continuity is **NOT** obtained
- eliminate open circuit in wiring using wiring diagram

If continuity **IS** obtained
- replace MPI control unit

cardiagn.com

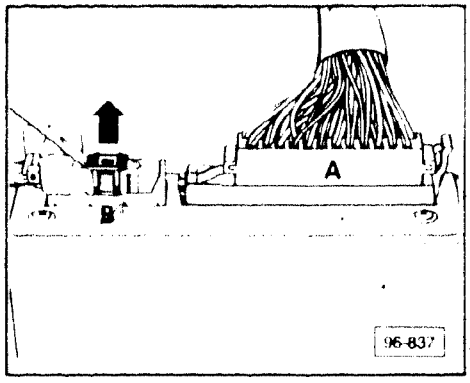

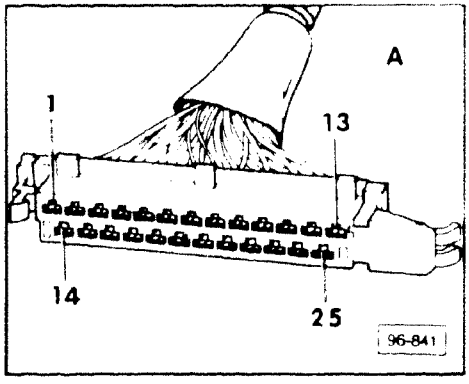

MPI control unit, checking

Voltage supply, checking

- remove foot-well cover under glove compartment
- remove harness connector **A**
- switch multimeter **US 1119** to 20 volt range
- connect multimeter between terminals **18** and **21**
- switch **ON** ignition
  - approximately 12 volts

If voltage value is **NOT** obtained
- check wiring using wiring diagram

- connect multimeter between terminals **25** and 1, then **25** and **2**, then **25** and **13** of harness connector **A**
  - approximately 12 volts

If voltage value is **NOT** obtained
- check wiring using wiring diagram

cardiagn.com

Coding connector, checking (California vehicles ONLY)

Note

The 6-pin coding connector is located in the passenger side foot-well under A pillar kick panel.

Requirement
- MPI control unit supply voltage **OK**

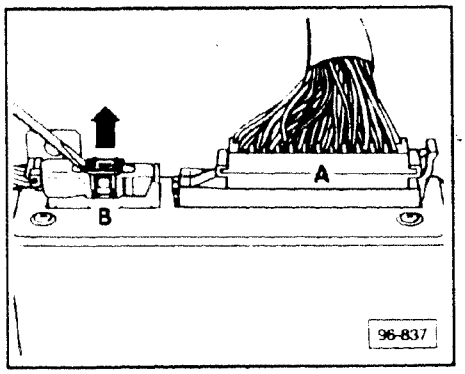

- remove passenger side kick panel (A-pillar)
- remove coding connector mating piece
- connect multimeter **US 1119** between both terminals of coding connector
- switch **ON** ignition
  - approximately 5 volts

If voltage value is **NOT** obtained
- switch **OFF** ignition
- remove foot-well cover under glove compartment
- remove harness connector **A** from control unit
- open connector **B** secondary lock (black) and remove connector

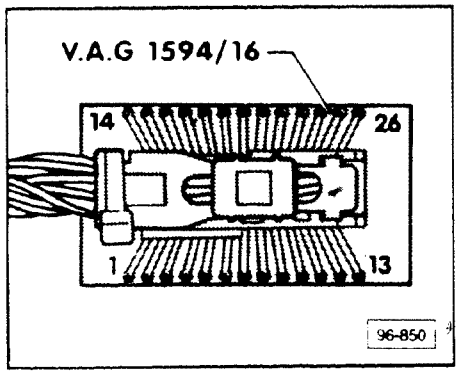

- connect measuring adapter **VW 1594/16** to connector **B**
- switch multimeter **US 1119** to resistance range
- check continuity between terminal **3** of coding connector and terminal **5** of measuring adapter

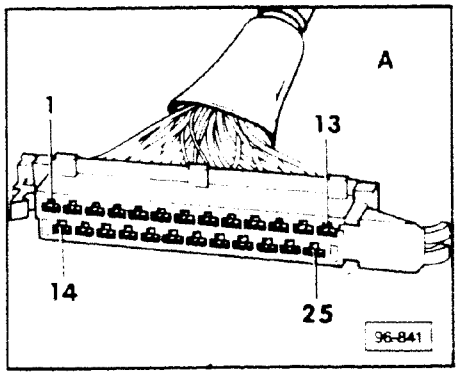

- check continuity between terminal **5** of the coding connector and terminal **13** of harness connector **A**

If there are **NO** open circuits and voltage value was **NOT** obtained
- replace MPI control unit
- check continuity between terminals **3** and **5** in wiring bridge in mating piece of coding connector

cardiagn.com

Index

20-valve engine (from 03/90 prod.)

A/C auxiliary signal
- checking 24-370

A/C compressor cut-out
- checking 24-360

Air mass sensor and CO potentiometer
- checking 24-260

Carbon canister solenoid valves
- checking 24-280

Coolant temperature sensor
- checking 24-290

Engine speed sensor
- checking 24-320

Fuel consumption rate indicator
- checking 24-350

Fuel injectors
- checking 24-250

Fuel pressure
- checking 24-240

Fuel pump relay
- checking 24-270

Idle switch
- checking/adjusting 24-310

Idle speed and CO content
- preferred method, checking/adjusting 24-390
- alternate method, checking/adjusting 24-395

Idle stabilization
- checking 24-400

MPI (multi-point injection) control unit
- voltage supply checking 24-410

MPI fuel injection system
- component layout 24-210

Oxygen sensor
- checking 24-380

System precautions
- rules of cleanliness 24-320
- safety measures 24-220

Technical data
- fuel pressure and settings 24-230

Throttle potentiometer
- checking/adjusting 24-300

Wheel speed signal (vehicle speed)
- checking 24-340

cardiagn.com

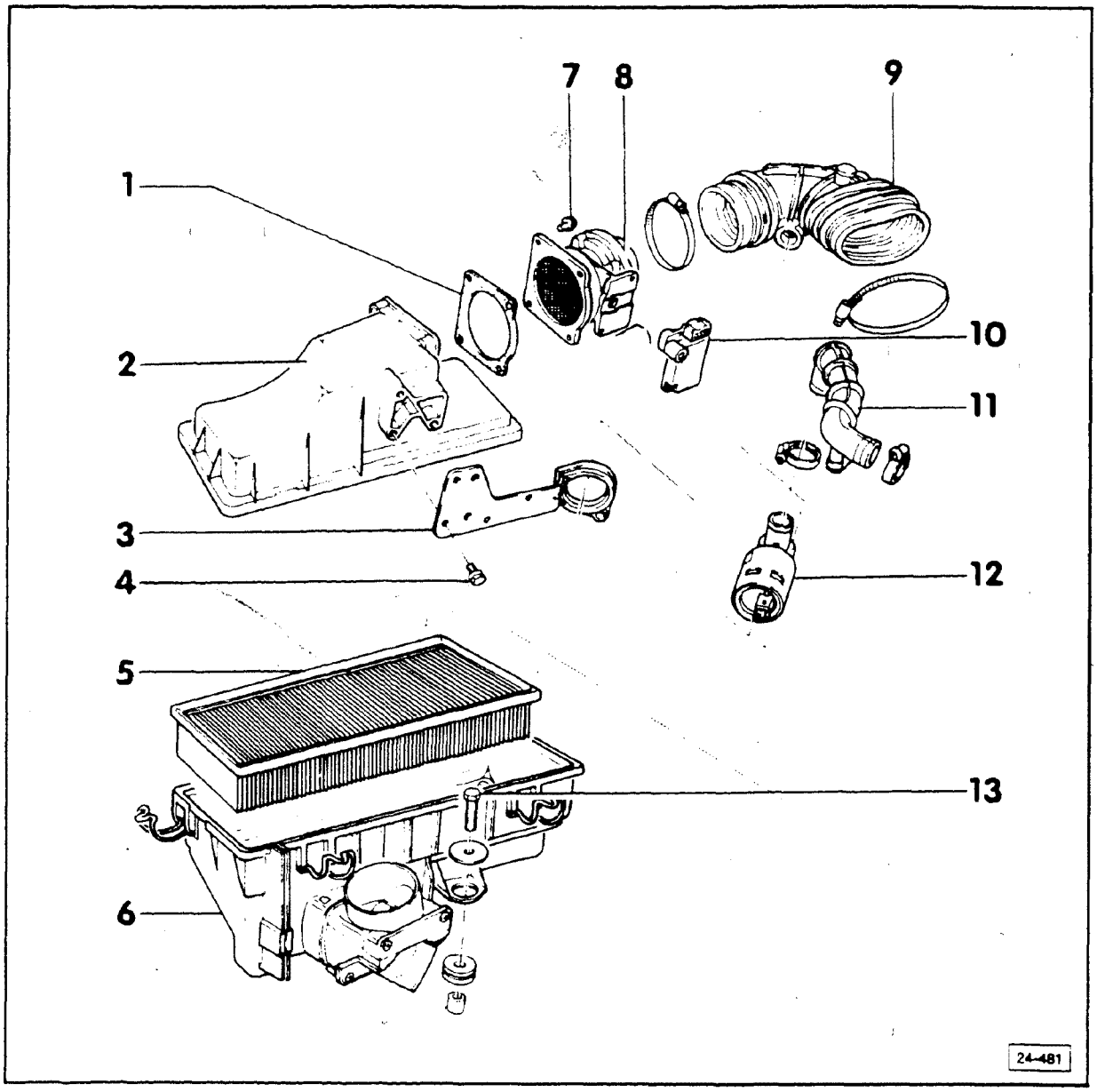

Note

Replace gaskets as necessary

Before performing repair work on the fuel injection system, activate fault memory and perform output checks. See Repair Group D2 for additional information.

1 — **Gasket**

2 — **Air filter housing, upper section**

3 — **Idle stabilizer valve bracket**

4 — **10 Nm (7 ft lb)**

5 — **Air filter element**

6 — **Air filter housing, lower section**

7 — **10 Nm (7 ft lb)**

8 — **Air mass sensor housing**

9 — **Intake air boot**

10 — **Air mass sensor**
- checking, section 24-260

11 — **Hose**

12 — **Idle stabilizer valve**
- checking, section 24-400

13 — **15 Nm (11 ft lb)**

cardiagn.com

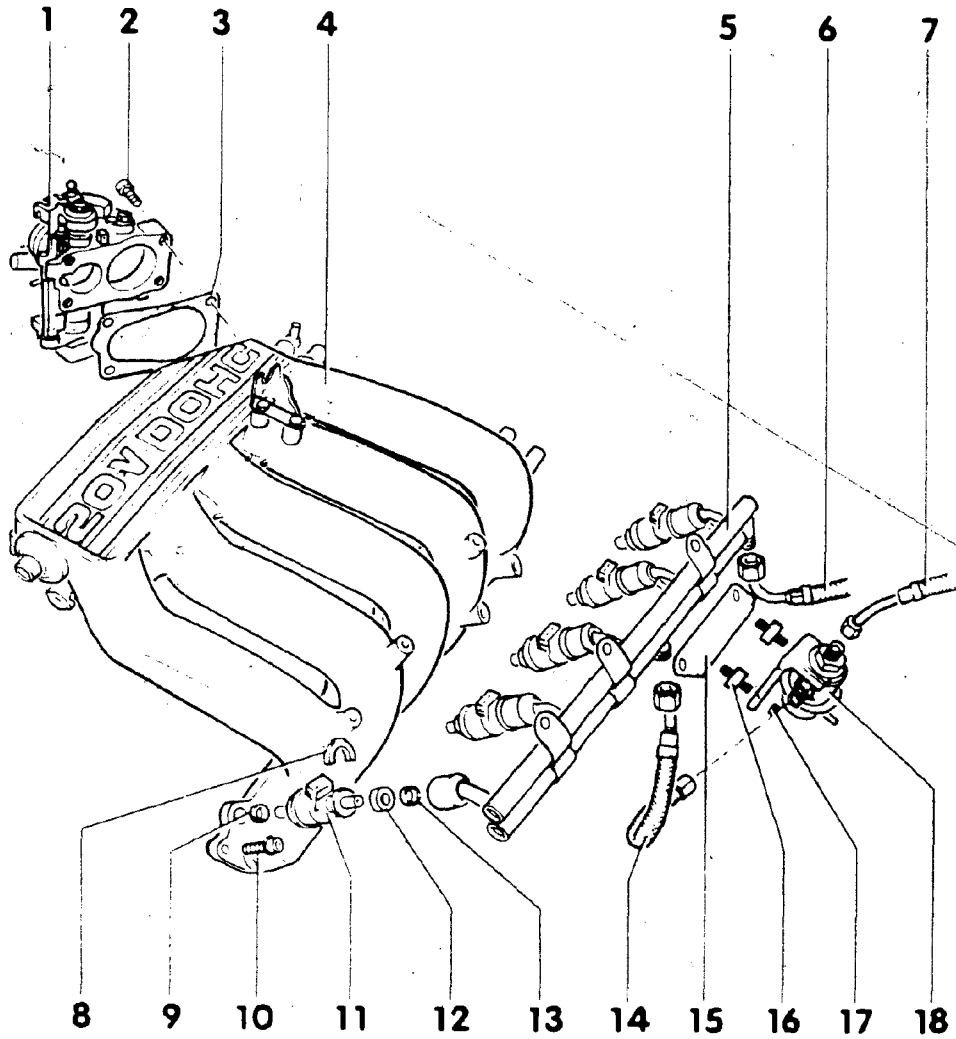

- Safety measures, section 24-220
- Cleaning, section 24-220
- Fuel system, pressure checking, section 24-240

1 — **Throttle body**
- potentiometer, checking/adjusting, section 24-300
- idle switch, checking/adjusting, section 24-310

2 — **20 Nm (15 ft lb)**

3 — **Gasket**

4 — **Intake manifold**

5 — **Fuel rail**

6 — **Fuel supply line**

7 — **Fuel return line (to control pressure regulator)**

8 — **Retaining clip for fuel injector**

9 — **Gasket**
- replace

10 — **20 Nm (15 ft lb)**

11 — **Fuel injector**
- checking, section 24-250

12 — **Fuel filter element**

13 — **Gasket**
- replace

14 — **Fuel return line (to fuel tank)**

15 — **Regulator mounting bracket**

16 — **Rubber bonded mounting bushing**

17 — **10 Nm (7 ft lb)**

18 — **Control pressure regulator**

cardiagn.com

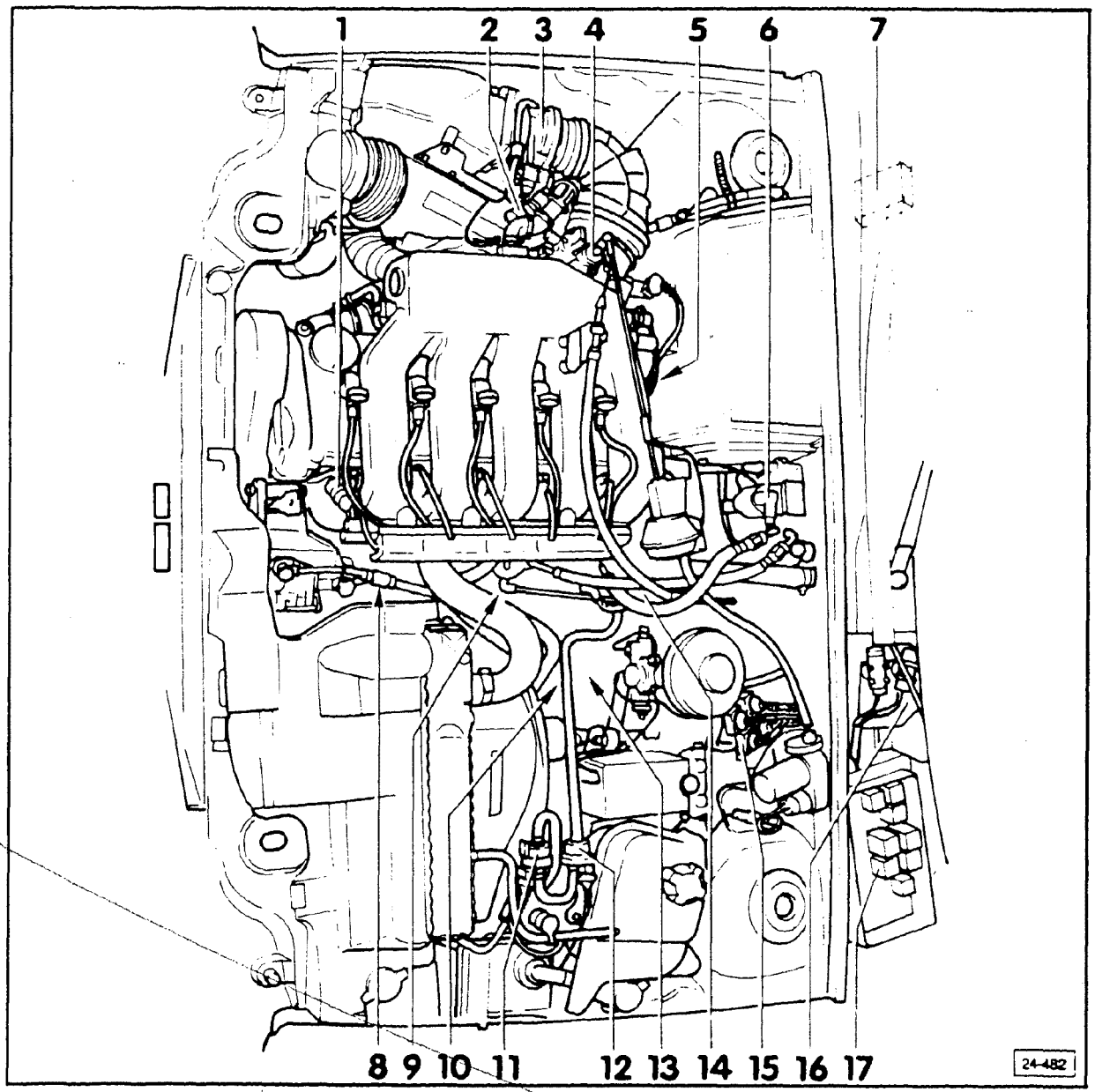

1 — **Fuel injector**
- checking, section 24-250

2 — **Idle stabilizer valve (N 71)**
- checking, section 24-400

3 — **Air flow sensor (G 70)**
- checking, section 24-260

4 — **Throttle body**
- potentiometer checking, section 24-300

5 — **Coolant temperature sender (G 62)**
checking, section 24-290

6 — **Ignition coil (N) with power output stage**
- checking, see Repair Group 28

7 — **MPI control unit (J 192)**
- voltage supply, checking section 24-410

8 — **Knock sensor I (G 61)**
- **10 Nm (7 ft lb)**

9 — **Knock sensor II (G 66)**
- **10 Nm (7 ft lb)**

10 — **Ignition timing point sender**
- checking, see Repair Group 28

11 — **Solenoid valve II (N 115) (ON/OFF valve) for carbon canister system**
- checking, section 24-280

cardiagn.com

12 — **Solenoid valve I (N 80) (frequency valve) for carbon canister system**
- checking, section 24-280

13 — **Engine speed sender (G 28)**
- checking, section 24-320

14 — **Ignition distributor with Hall sender**
- basic adjustment, see Repair Group 28

15 — **Harness connector mounting bracket**

16 — **Resistor pack (N 34) for fuel injectors**
- checking, section 24-250

17 — **Fuel pump relay (J 17)**
- checking triggering, section 24-270

cardiagn.com

System precautions

Rules of cleanliness

CAUTION

When working on the fuel supply/injection system, carefully observe the following rules:

1 – Thoroughly clean connection and surrounding areas before loosening connection.

2 – After removing components, place in clean area and cover with foil or paper. Avoid using rags!

3 – Components which have been opened or disassembled must be carefully covered or sealed if repair cannot be carried out immediately.

4 – Install clean parts only.

- remove replacement parts from package just before installing
- do **NOT** use spare parts that were stored loose or unpackaged (e.g. in tool boxes, etc.)

5 – When fuel system is open:

- avoid using compressed air whenever possible
- avoid moving the vehicle whenever possible

cardiagn.com

Safety measures

CAUTION

Observe the following precautions to prevent personal injury as well as possible damage to the ignition system components.

- switch **OFF** the ignition before connecting or disconnecting components or test equipment
- connect and disconnect battery **ONLY** with ignition switched **OFF** otherwise the MPI control unit could be damaged
- if the engine must be cranked but not started (for compression testing etc.) disconnect power output stage of ignition coil and fuse 13
- do **NOT** use battery booster longer than one minute nor should 16.5 volts be exceeded
- do **NOT** wash engine unless ignition is switched **OFF**
- disconnect **BOTH** battery terminals whenever arc or spot welding
- before towing, vehicles with a defective ignition system (or where this is suspected) must have terminal 1 (green) of the ignition coil disconnected
- do **NOT** connect a condenser of any kind to terminal 1 of the ignition coil
- when installing noise suppressors, **ONLY** use 1000 ohms for high tension wires and 5000 ohms for spark plug connectors
- do **NOT** replace distributor rotor (marked **R1**) with a different type
- if the vehicle is heated up (e.g. in a painting booth) do **NOT** start the engine until it has had sufficient time to return to room temperature

Note

There are a wide variety of electrical connections used on this vehicle, **ALWAYS** use the **VW 1594** adaptor kit to connect test equipment to these connections.

CAUTION

Before disconnecting a customer's battery; ALWAYS ask for the radio code (if equipped with an anti-theft radio).

cardiagn.com

Technical data

System pressure	3.8 to 4.2 bar (55 to 61 psi)
Residual pressure	
minimum after 10 minutes	3.2 bar (46.4 psi) (gauge pressure)
minimum after 20 minutes	3.0 bar (43.5 psi) (gauge pressure)
Fuel injector delivery volume (per 20 seconds)	100 to 120 ml
***Idle speed** adjusting	800 ± 50 rpm
***CO content**	0.75 ± 0.25 % volume

CAUTION

Idle speed and CO content are inter-related and **MUST** be checked and adjusted together.

* Requirements for checking/adjusting
- perform vehicle self-diagnosis, see Repair Group D2 for additional information
- engine warm, oil temperature 80°C (176°F) minimum
- throttle valve in idle position
- all electrical consumers switched **OFF**
- pressure measuring equipment **NOT** connected
- radiator fan **NOT** running while taking measurements

cardiagn.com

Fuel pressure, checking

CAUTION

Fire hazard. Do **NOT** have anything in area that can ignite fuel.

Requirements
- fuse **13 OK**
- correct fuel filter installed
- battery voltage 12 volts minimum

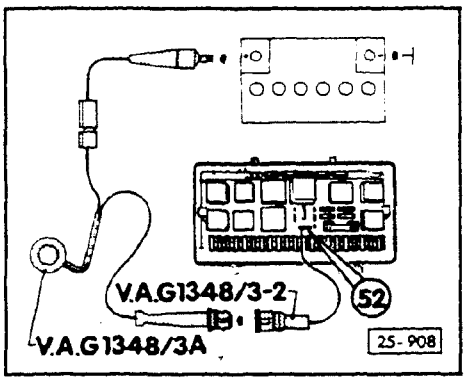

Remote control VAG 1348/3A, connecting

- remove fuel pump relay from fuse/relay panel (position **10**)
- insert male connector from adaptor **VAG 1348/3-2** into terminal **52** of relay socket
- connect alligator clip terminal of remote control **VAG 1348/3A** to positive battery terminal
- connect mating connectors of **VAG 1348/3A** remote control and **VAG 1348/3-2** adaptor

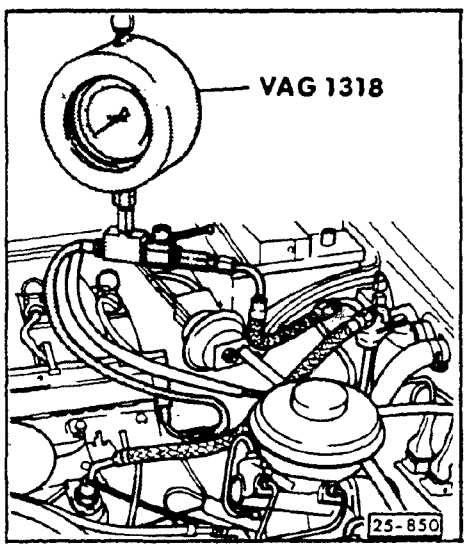

System pressure

- connect pressure gauge **VAG 1318** between fuel rail and fuel supply line. with pressure gauge lever in **OPEN** position
- remove vacuum line from control pressure regulator to intake manifold (at control pressure regulator) and plug line

Note

If fuel leaks from the vacuum connection of the control pressure regulator after performing the following test. replace the control pressure regulator.

- briefly activate remote control **VAG 1348/3A**
- fuel pump must run

If **NO**

- check fuel pump. see Repair Group 20

cardiagn.com

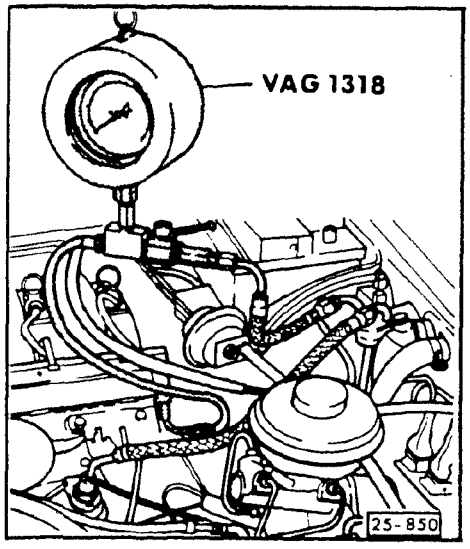

- activate remote control until pressure stabilizes
  - 3.8 to 4.2 bar (55 to 61 psi) with pump running
  - 3.0 to 3.5 bar (44 to 51 psi) immediately after switching OFF remote

If specified pressure **NOT** obtained

- trial replace control pressure regulator and repeat test

If specified pressure still **NOT** obtained

- check fuel pump or fuel supply line for damage (pinched) or blockage, repair or replace as necessary

If specified pressure exceeded

- connect **VAG 1318** pressure tester between fuel rail and control pressure regulator (substituting short return line)
- repeat test
  - 3.8 to 4.2 bar (55 to 61 psi) with fuel pump running

If pressure value obtained

- replace fuel rail

If pressure value obtained is **LOW**

- replace pressure regulator

If pressure value obtained is **HIGH**

- check return line for pinching or blockage, replace or repair as necessary
- disconnect **VAG 1348/3A** remote control and re-insert fuel pump relay

CAUTION

Higher than specified fuel pressure can weaken or tear the pressure regulator diaphragm which in turn can allow fuel to enter the engine through the vacuum line.

Note

During the following check the engine should not be run with the vacuum hose removed for any longer than necessary.

Higher fuel pressure (with vacuum hose removed) causes an enrichment of the fuel air mixture which under the circumstances causes it to exceed the Oxygen sensor control limits thereby causing a fault to register in fault memory.

cardiagn.com

- start engine and let idle
- switch OFF all electrical consumers
- connect vacuum hose to pressure regulator and observe pressure drop on gauge
  - must drop by 0.5 bar (7.3 psi)

If **NO**

- check vacuum hose for leaks (cracks, pinching, chafing etc.) repair or replace as necessary
- check vacuum connection on intake manifold for flow by blowing through it

If **OK**

- replace pressure regulator

Residual pressure, checking

- shut off engine and observe pressure gauge
  - after 10 minutes minimum pressure must be:

    engine cold: 2.2 bar (31.9 psi)

    engine hot: 3.0 bar (43.5 psi)

Note

The hot engine fuel pressure increase is due to fuel expansion and is normal.

If minimum pressure is **NOT** obtained

- check **VW 1318** pressure tester for leaks
- check fuel lines for leaks
- check fuel pump check valve (see Repair Group 20)
- inspect fuel injectors for leaks, see section 24-250

If **NO** leaks are found and fuel pump check valve is **OK**

- replace fuel pressure regulator and repeat test

cardiagn.com

Fuel injectors, checking

CAUTION

Fire hazard. Do **NOT** have anything in area that can ignite fuel.

- activate Fault memory (for additional information see Repair Group D2)
  - if a fault is indicated for the fuel injectors continue with the following procedures

CAUTION

The fuel injectors are operated via a series resistor network which limits the amount of current to the fuel injectors.

DO NOT TRY to check the fuel injectors by applying battery voltage!

- remove harness connector from fuel injector to be tested
- switch multimeter **US 1119 (VAG 1526)** to resistance range

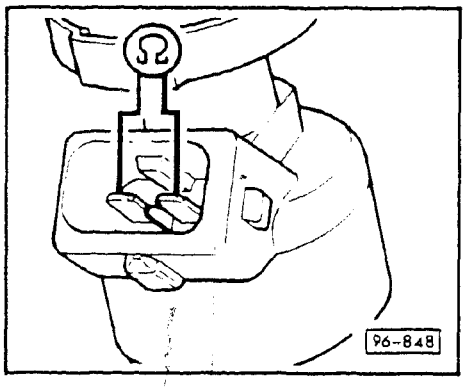

- measure resistance of injector(s) under test
  - must be from 1 to 3 ohms

If **NO**

- replace injector(s)
- perform Output checks diagnosis, see Repair Group D2 for additional information

If during diagnosis one or more injectors are **NOT** triggered

- perform the following

Fuel injectors voltage supply, checking

Requirements

- fuel pump relay **OK**
- fuel pump triggering **OK**
- fuse 13 **OK**

cardiagn.com

CAUTION

The fuel injectors are operated via a series resistor network which limits the amount of current to the fuel injectors.

DO NOT TRY to check the fuel injectors by applying battery voltage!

- disconnect harness connector from fuel injector(s) under test

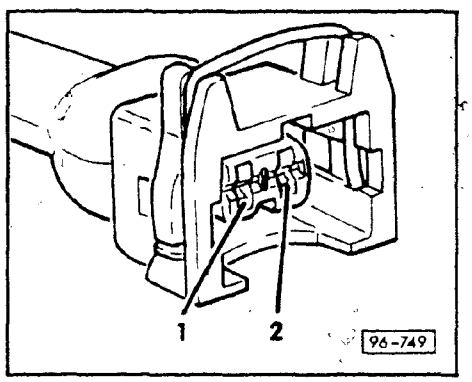

- connect **US 1115 (VAG 1527B)** LED tester between terminal **2** of harness connector and ground
- briefly operate starter
  - LED tester must light up

If **YES**

- check fuel injector triggering in this section

If **NO**

- check resistor pack in this section

Fuel injector wiring, checking

- switch multimeter **US 1119 (VAG 1526)** to resistance range
- check continuity between harness connector of fuel injector under test and:...

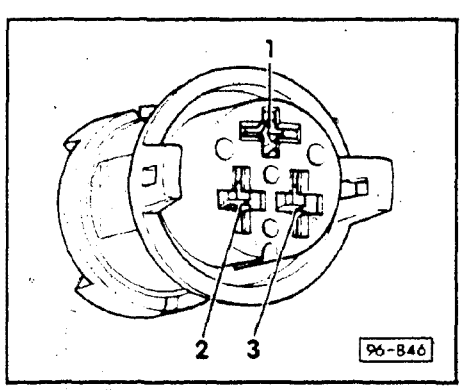

- resistor pack harness connector per wiring diagram
  - must be continuity
- check continuity between terminal **1** of gray connector and fuse **13**, repair as necessary

cardiagn.com

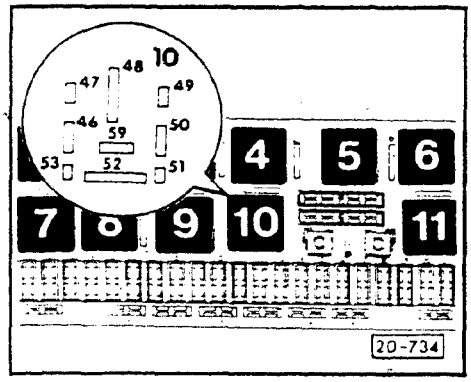

- check for open wire in fuse relay panel between fuse **13** and terminal **52** of relay location **10**

If **YES**

- replace fuse/relay panel

Resistor pack connector, wiring identification

Gray connector
Terminal **1**: voltage supply from fuse **13**
Terminal **2**: injector for cylinder **1**
Terminal **3**: injector for cylinder **2**

Brown connector
Terminal **1**: injector for cylinder **3**
Terminal **2**: injector for cylinder **4**
Terminal **3**: injector for cylinder **5**

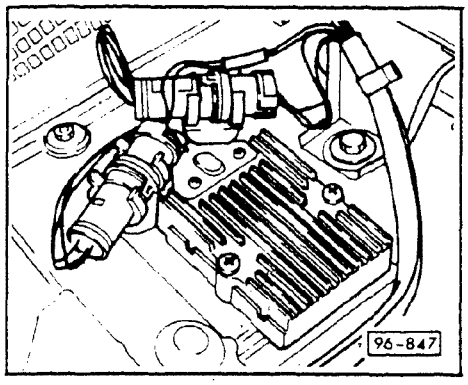

Resistor pack, checking

- disconnect both harness connectors at resistor pack
- switch multimeter **US 1119 (VAG 1526)** to resistance range
- measure resistance between the white wire and each of the black wires in the resistor pack connectors (not the wires in the harness connector!)
  - must be from 5.0 to 8.0 ohms from the entire set of measurements

If **NO** for one or more readings

- replace resistor pack

Fuel injector triggering, checking

- disconnect harness connector for fuel injector under test

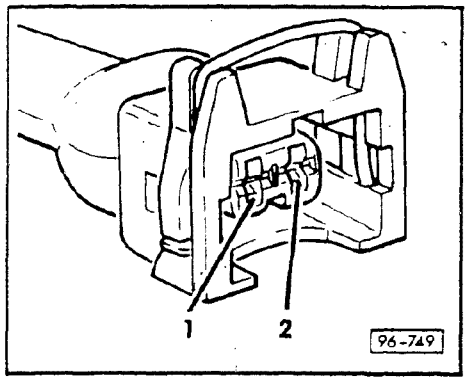

- using **VW 1594** adaptor set connect **US 1115 (VAG 1527B)** LED tester between terminal **1** and battery positive
- operate starter for a few seconds allowing engine to start
  - LED tester must flash

If **NO**

- connect **VAG 1598** test box to MPI control unit harness connector using adaptor **VAG 1598/12**
  - control unit is left disconnected

cardiagn.com

- connect **US 1115 (VAG 1527B)** LED tester between terminal **8** (power) of test box and terminal for the respective fuel injector as shown in chart below

Injector		VAG 1598 terminal
Cylinder **1**	=	4
Cylinder **2**	=	5
Cylinder **3**	=	6
Cylinder **4**	=	9
Cylinder **5**	=	10

- operate starter for several seconds
  - LED tester must flash

If **NO**

- check voltage supply to MPI control unit, see section 24-410

If voltage supply **OK**

- replace MPI control unit

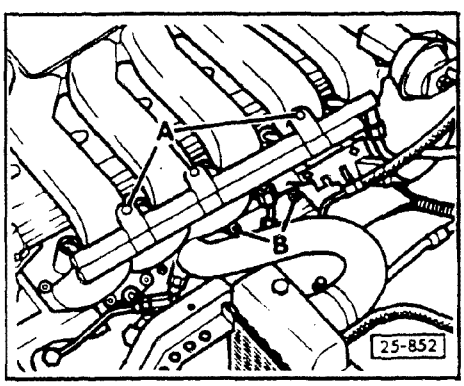

Injection quantity, comparative measurement

- remove fuel rail assembly (mounting bolts **A**) complete with injectors but do **NOT** disconnect fuel lines
- remove pressure regulator with bracket from manifold (mounting bolts **B**)
- remove hose clamp on rear of intake manifold and (if installed) bracket for cruise control vacuum reservoir

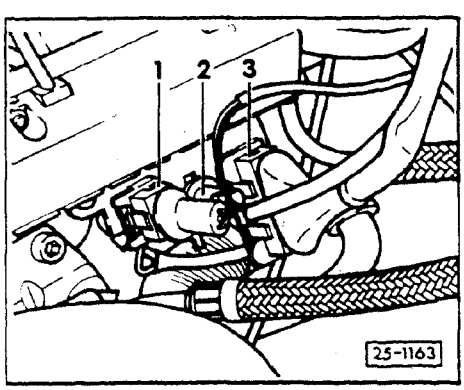

- disconnect harness connectors 1, 2 and **3** on intake manifold
- disconnect coil wire from distributor cap and connect to ground using **VW 1594** adaptor kit
- expose fuel injector connector terminals by pushing back rubber boots on fuel injector harness connectors (while leaving connected)
- insert fuel injectors into **VAG 1602** fuel analyzer (for volume measurement)
- perform Output checks diagnosis to trigger fuel pump relay (**J 17**), see Repair Group D2 for additional information
  - fuel pump must run

cardiagn.com

- with fuel pump running, visually inspect tip of fuel injectors for leakage
  - 1 to 2 drops per minute is permissible

If leakage is greater

- switch **OFF** ignition

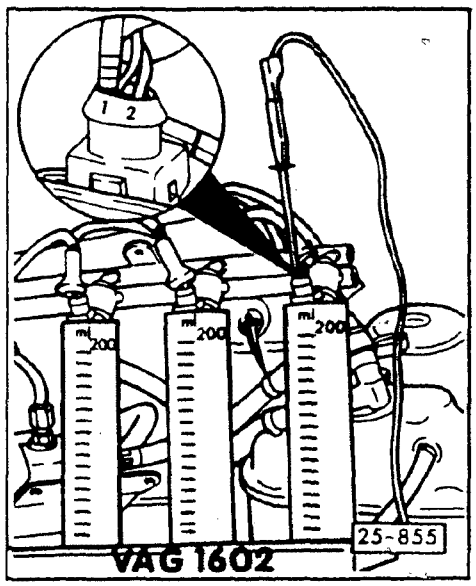

- push back rubber boot on each injector
- connect brown wire of exposed fuel injector harness connector to ground using jumper from **VW 1594** adaptor kit

Note

This step is performed for each fuel injector in sequence for a duration of 20 seconds per injector.

- after 20 seconds must be 100 to 120 ml of fuel in **VAG 1602**

If fuel quantity for one or more injectors is above or below specification

- replace defective injector(s)

If quantity of all five injectors is above or below specification

- check system pressure, section 24-240
- replace entire set of fuel injector O-rings before re-installing injectors

> **CAUTION**
>
> Ensure that the O-rings are **NOT** damaged during the fuel injector installation.

cardiagn.com

Air mass sensor (G 70) and CO potentiometer (G 74), checking

Requirement
- fuse 27 OK

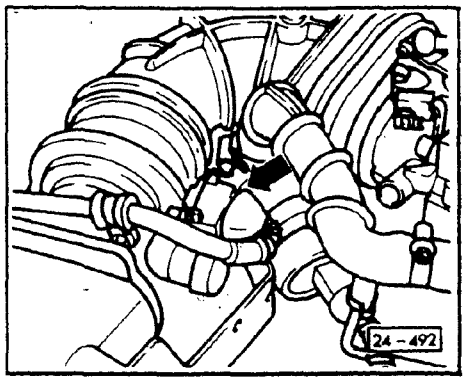

Voltage supply, checking

- disconnect harness connector from air mass sensor (**arrow**)

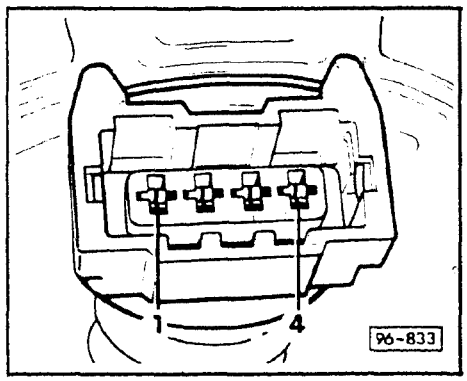

- connect **US 1115** (**VAG 1527B**) LED tester between terminal **3** of harness connector and ground
  - LED tester must light up

If **NO**

- connect **VAG 1598** test box to MPI control unit harness connector **A** using adaptor cable **VAG 1598/11**
  - harness connector **D** must remain connected to MPI control unit; either directly or via adaptor cable **VAG 1598/12**
- connect **US 1115** (**VAG 1527B**) LED tester between terminals **41** and **43** (ground) of test box
- switch **ON** ignition
  - LED tester must light up

If **YES**

- using wiring diagram, determine break or disconnection in wiring between terminal **3** of MPI control unit harness connector **A** and terminal **2** of air mass sensor harness connector, replace or repair as necessary

If **NO**

- replace MPI control unit

cardiagn.com

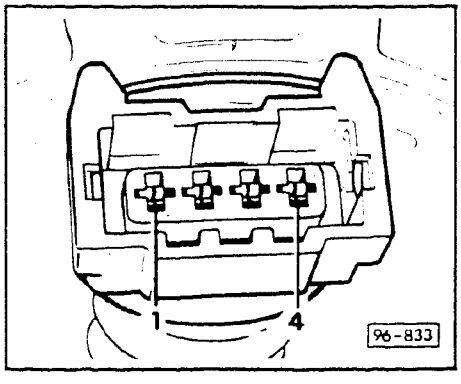

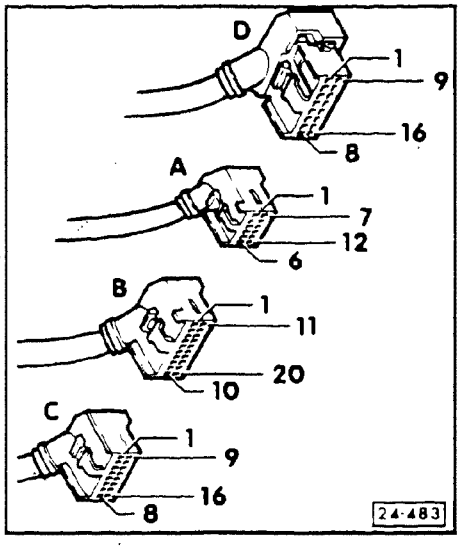

Wiring, checking

- connect **VAG 1598** test box to MPI control unit* harness connector **A** using adaptor cable **VAG 1598/11**
  - control unit is **NOT** connected
- disconnect air mass sensor harness connector
- check wiring between following terminals for continuity or possible short circuit

Air mass sensor harness connector terminal number		Test box terminal number
1	← →	42 (2)*
2	← →	45 (5)*
4	← →	41 (1)*

  - resistance must **NOT** be greater than 0.5 ohms (continuity)

* number in parentheses is the number of the terminal in the MPI control unit harness connector **A**

If a short or open circuit is detected between the air mass sensor harness connector and the test box

- replace or repair the actual wiring between control unit harness connector **A** and the air mass sensor harness connector as necessary

> **CAUTION**
>
> If air mass sensor harness connector requires replacement terminals, **ONLY** use gold plated terminals.

Air mass sensor and CO potentiometer, functional check

- expose wiring of air mass sensor harness connector by peeling back the rubber boot but leaving it connected

Note

The terminal numbers are molded onto the back side of the connector.

- switch **ON** ignition
- switch multimeter **US 1119** to 2 volt range

cardiagn.com

- connect multimeter between terminals **2** and **4**
  - must be between 1.0 and 1.5 volts

If **NO**

- CO potentiometer in air mass sensor assembly is defective
- replace air mass sensor assembly

- switch **OFF** ignition
  - must be 0.3 to 1.1 volts

- switch **OFF** all electrical consumers
- start engine and let idle
- observe engine RPM's (while radiator fan is **NOT** running)
  - must fluctuate between idle spec and 400 RPM
  - depending on engine speed; multimeter must indicate between 0.3 and 1.1 volts

If **NO**

- replace air mass sensor assembly

cardiagn.com

Fuel pump relay, checking

- remove fuses **13** and **28**
- connect **US 1115 (VAG 1527B)** LED tester between ground and rear terminal for fuse **13**
- briefly operate starter
  - fuel pump relay must activate. LED tester must light up

If fuel pump is **NOT** operating

- check triggering, in this section

If LED tester does **NOT** light up

- check electrical connections, in this section
- connect **US 1115 (VAG 1527B)** LED tester to ground and left terminal for fuse **28**
- briefly operate starter
  - LED tester must light up

If **NO**

- connect **US 1115 (VAG 1527B)** LED tester to right terminal for fuse **28**
  - LED tester must light up

If **NO**

- check wiring and connections, in this section

If **YES**

- re-insert fuses **13** and **28**

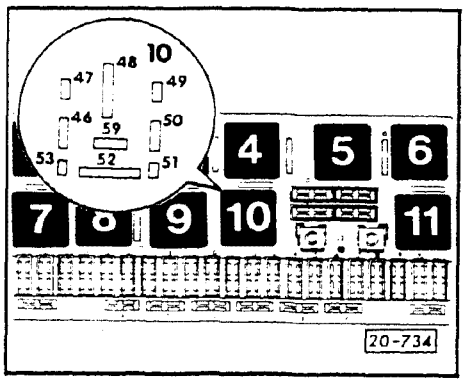

Wiring, checking

- remove fuel pump relay **(J 17)** from fuse relay panel, location **10**
- switch **US 1119 (VAG 1526)** multimeter to resistance range
- check continuity between terminal **52** (of fuse relay panel socket **10**) and fuse **13**; then between terminal **59** and fuse **28**
  - must not be greater than 0.5 ohms

If **NO**

- eliminate open circuit using wiring diagram; repair as necessary

If **NO** open circuit is found

- check fuel pump relay triggering

cardiagn.com

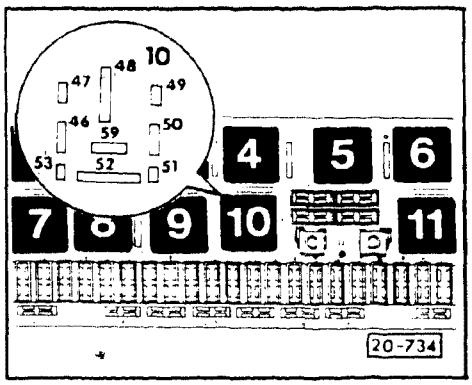

Triggering, checking

- remove fuel pump relay (**J 17**) from fuse relay panel, location **10**
- switch **ON** ignition
- switch multimeter **US 1119 (VAG 1526)** to 20 volts DC range
- connect multimeter first between terminals **46** and **50** then between terminals **48** and **50** (of fuse relay panel socket **10**)
  - must be approximately battery voltage

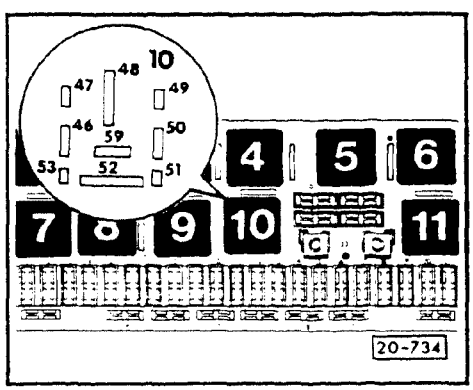

If specified value is **NOT** obtained

- eliminate open circuit using wiring diagram, repair as necessary
- switch **OFF** ignition
- connect **US 1115 (VAG 1527B)** LED tester between terminals **46** and **47** (of fuse relay panel socket **10**)
- switch **ON** ignition
  - LED tester must illuminate brightly for approximately 1 second and then become dim
- briefly operate starter
  - LED tester must become brighter

If LED tester remains dim while operating starter

- replace MPI control unit

If LED tester does **NOT** light up

- check wiring as follows:
- connect **VAG 1598** test box to MPI control unit harness connector using adaptor **VAG 1598/12**
  - control unit is left disconnected
- switch multimeter **US 1119 (VAG 1526)** to resistance range
- check continuity between terminal **47** of fuse relay panel socket **10** and terminal **15** on **VAG 1598** test box
  - must not be greater than 0.5 ohms

cardiagn.com

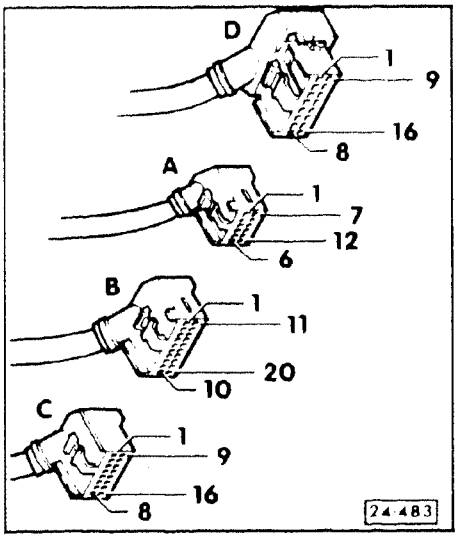

- using wiring diagram, eliminate open circuit between terminal **47** (of fuse relay panel socket **10**) and terminal **15** of control unit connector **D** shown in illustration

If there is **NO** open circuit AND LED tester does **NOT** light up

- replace MPI control unit

If fuel pump triggering AND wiring are **OK**

- replace fuel pump relay
- re-insert fuses **13** and **28**

cardiagn.com

Carbon canister solenoid valves, checking

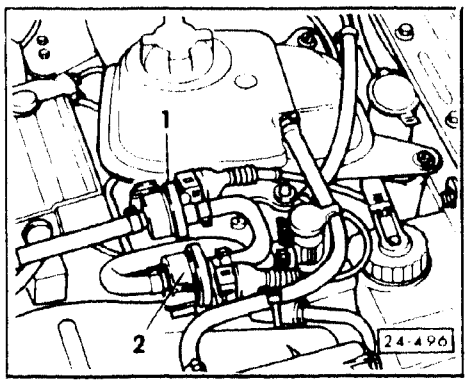

- disconnect harness connector from respective solenoid valve

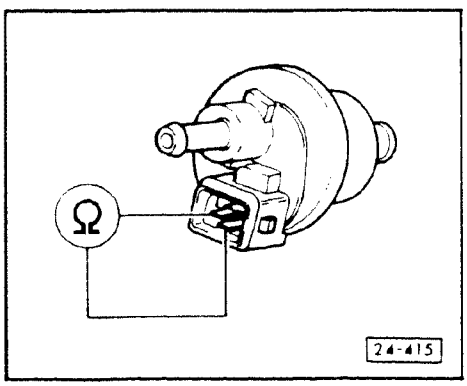

- switch multimeter **US 1119 (VAG 1526)** to resistance range
- measure resistance of respective solenoid valve
  - must be between 40 and 50 ohms

If **NO**

- replace solenoid valve

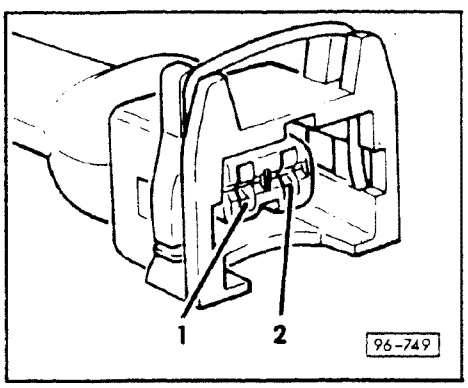

Voltage supply, checking

- remove harness connector from respective solenoid valve
- connect **US 1115 (VAG 1527B)** LED tester between terminal 1 of harness connector and ground, using adaptors from **VW 1594** kit
- activate starter for several seconds
  - LED tester must light up

If **NO**

- check fuse **28**

cardiagn.com

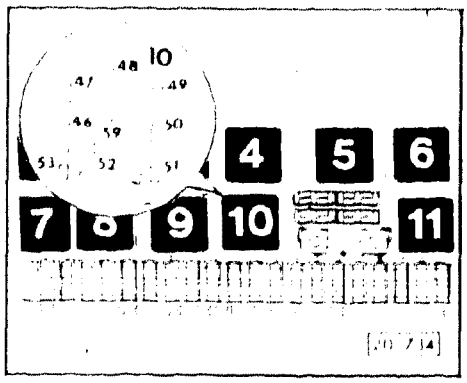

- using wiring diagram, check continuity between terminal 1 of harness connector (for respective solenoid valve) and fuse 28
  - must be less than 0.5 ohms
- check fuel pump relay and triggering (see section 24-270)

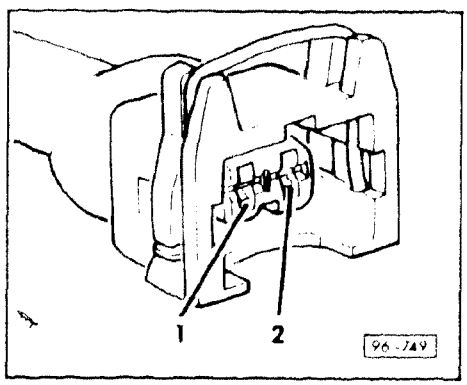

Solenoid valve 1 triggering, checking

- connect **US 1115 (VAG 1527B)** LED tester between terminals **1** and **2** of harness connector using **VW 1594** adaptor kit
- perform Output checks sequence (see Repair Group D2 for additional information)
  - LED tester must blink

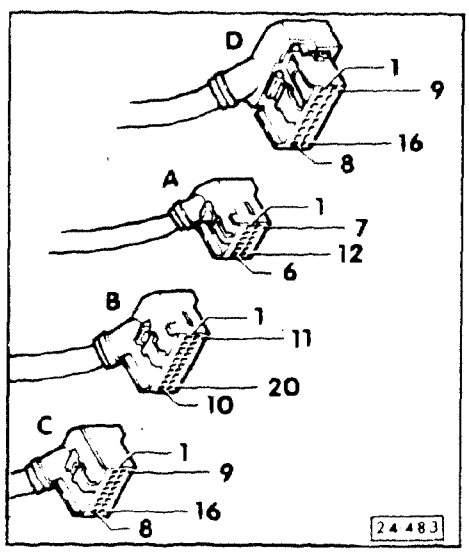

If LED tester does **NOT** blink or remains **ON** constantly

- connect test box **VAG 1598** to MPI control unit harness connector **D** using **VAG 1598/12** adaptor cable
  - MPI control unit not connected

If LED tester is **ON** constantly

- check for an unwanted ground connection between terminal **2** of solenoid valve harness connector and terminal **12** of test box, repair as necessary

If LED tester does **NOT** blink

- check continuity between terminal **2** of solenoid valve harness connector and terminal **12** of test box, repair as necessary
  - must be less than 0.5 ohms

If wiring checks **OK**

- replace MPI control unit

cardiagn.com

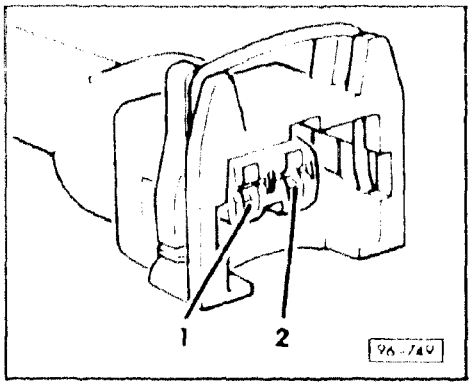

Solenoid valve 2 triggering, checking

- connect **US 1115 (VAG 1527B)** LED tester between terminals **1** and **2** of harness connector using **VW 1594** adaptor kit
- perform Output checks sequence (see Repair Group D2 for additional information)
  - LED tester must blink

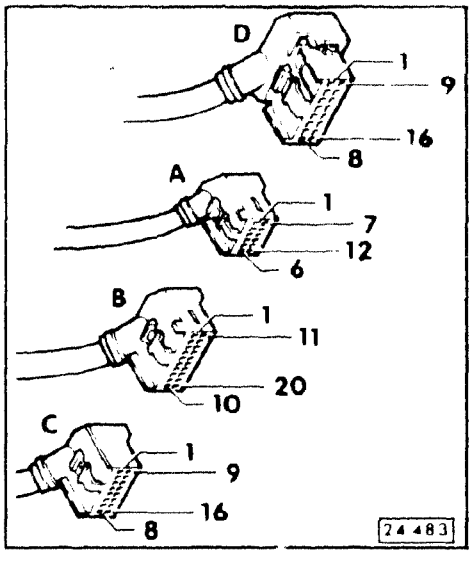

If LED tester does **NOT** blink or remains **ON** constantly

- connect test box **VAG 1598** to MPI control unit harness connector **B** using **VAG 1598/11** adaptor cable
  - MPI control unit not connected

If LED tester is **ON** constantly

- check for an unwanted ground connection between terminal **2** of solenoid valve harness connector and terminal **38** of test box (which is actually terminal **18** of harness connector **B**), repair as necessary

If LED tester does **NOT** blink

- check continuity between terminal **2** of solenoid valve harness connector and terminal **38** of test box (which is actually terminal **18** of harness connector **B**), repair as necessary
  - must be less than 0.5 ohms

If wiring checks **OK**

- replace MPI control unit

cardiagn.com

Coolant temperature sender (G 62), checking

- disconnect harness connector from coolant temperature sender
- switch **US 1119 (VAG 1526)** multimeter to resistance range

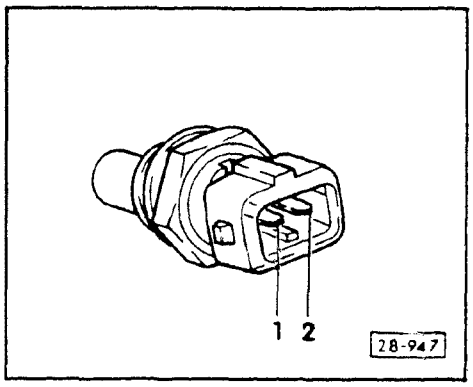

- connect multimeter between terminals **1** and **2** of coolant temperature sender
  - at approximately 20°C (68°F) coolant temperature must be approximately 2500 ohms
  - at approximately 80°C (176°F) coolant temperature must be approximately 330 ohms

If **NO**

- replace coolant temperature sender

If **YES**

- check wiring from sender to MPI control unit as follows:
- connect **VAG 1598** test box to MPI control unit harness connector **C** using adaptor cable **VAG 1598/11**
  - control unit is not connected during this check

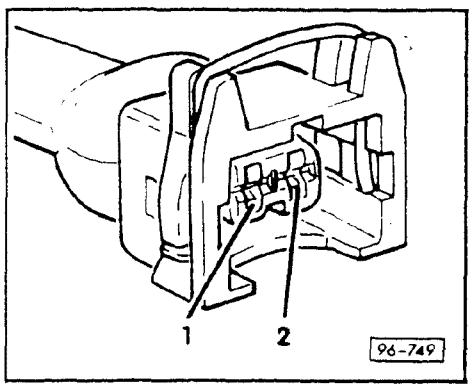

- check continuity between terminal **1** of harness connector and terminal **15** of test box
  - must not be greater than 0.5 ohms
- check continuity between terminal **2** of harness connector and terminal **16** of test box
  - must not be greater than 0.5 ohms
- check both wires for shorting, repair or replace as necessary

If wiring **OK** but a short or open still exists

- replace MPI control unit

cardiagn.com

Throttle potentiometer (G 69), checking/adjusting

See section 24-210 for throttle potentiometer location.

Voltage supply, checking

- disconnect harness connector from throttle potentiometer
- switch **ON** ignition
- switch multimeter **US 1119** to 20 volt range

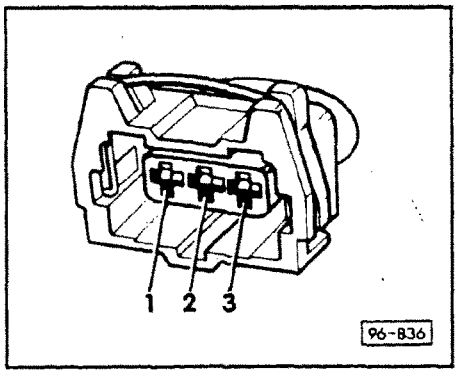

- connect multimeter between terminals **1** and **2**, then **1** and **3**
  - must be between 4.5 and 5.5 volts

If **NO**

- check wiring between harness connector and control unit
- switch **OFF** ignition
- connect test box **VAG 1598** to control unit harness connector using adaptor **VAG 1598/11**
  - control unit is left disconnected
- switch multimeter **US 1119** to resistance range
- check wiring between following terminals for continuity or short, using wiring diagram

Throttle potentiometer harness connector terminal number		Test box terminal number
1	↔	**46** (6)*
2	↔	**48** (8)*
3	↔	**47** (7)*

  - resistance must **NOT** be greater than 0.5 ohms (continuity)

* number in parentheses is the number of the terminal in the MPI control unit harness connector **A**

cardiagn.com

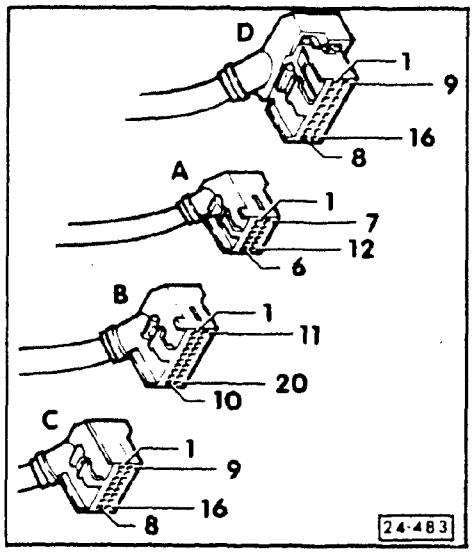

If a short or open circuit is detected between the throttle potentiometer harness connector and the test box

- replace or repair the actual wiring between control unit harness connector **A** and the throttle potentiometer harness connector as necessary

> **CAUTION**
>
> If the throttle potentiometer connector requires replacement terminals, **ONLY** use gold plated terminals.

- connect adaptor cable **VAG 1598/11** to MPI control unit
- switch **ON** ignition
- switch multimeter **US 1119** to 20 volt range
- connect multimeter between terminals **46** and **48** then between **46** and **47** of test box terminals
  - must be between 4.5 and 5.5 volts

If **NO**

- replace MPI control unit

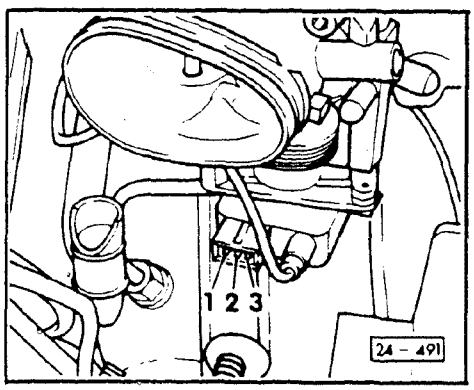

Throttle potentiometer, resistance checking

- switch multimeter **US 1119 (VAG 1526)** to resistance range
- connect multimeter between terminals **1** and **2** of potentiometer
  - must be between 1500 and 2600 ohms
- connect multimeter between terminals **2** and **3**
  - must be between 750 and 1300 ohms
- operate throttle lever slowly until full throttle is obtained
  - must **NOT** be greater than 3600 ohms

If any of these values **NOT** obtained

- replace throttle potentiometer

cardiagn.com

Throttle potentiometer, adjusting

Note

throttle potentiometer and idle switch are in one housing

only the idle switch is adjustable

IF the idle switch is correctly adjusted **THEN** the potentiometer is also adjusted

Requirement

- idle switch properly checked and adjusted

cardiagn.com

Idle switch (F 60), checking/adjusting

Note

The idle switch is located in the throttle potentiometer.

Checking

- disconnect harness connector from throttle body (**arrow**)

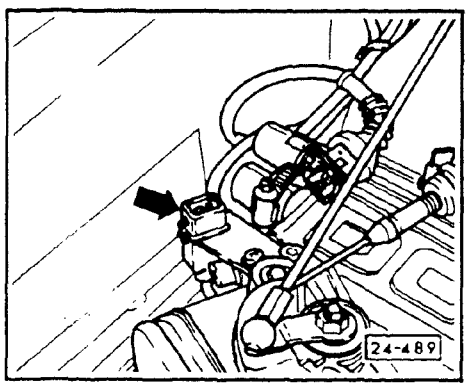

- switch multimeter **US 1119 (VAG 1526)** to resistance range
- connect multimeter to terminals of harness connector using adaptor kit **VW 1594**
  - must be approximately 0 ohms (continuity)
- open throttle slightly
  - must be open (infinite ohms)

If **NO** or if infinite resistance only with large throttle opening

- adjust idle switch

If after adjusting idle switch infinite ohms still not obtained

- replace throttle potentiometer

Adjusting

- switch multimeter **US 1119 (VAG 1526)** to resistance range
- connect multimeter to terminals of harness connector

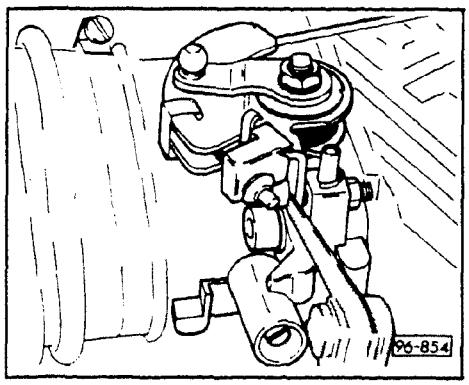

- open throttle and insert 0.4mm feeler gage between throttle screw and throttle stop
  - must be infinite ohms (open)
- remove feeler gage
  - must be approximately 0 ohms (continuity)
- insert 0.3 mm feeler gage (do not open throttle any more than necessary to insert the gage)
  - must be approximately 0 ohms (continuity)

If **NO**

- loosen throttle potentiometer mounting screws
- adjust potentiometer via slots so that multimeter just begins to read infinite ohms when a 0.4 mm feeler gage is inserted

cardiagn.com

- tighten mounting screws
- repeat test

Wiring between MPI control unit and idle switch, checking

- connect test box **VAG 1598** to control unit harness connector using adaptor **VAG 1598/11**
  - control unit is left disconnected
- remove harness connector from throttle body

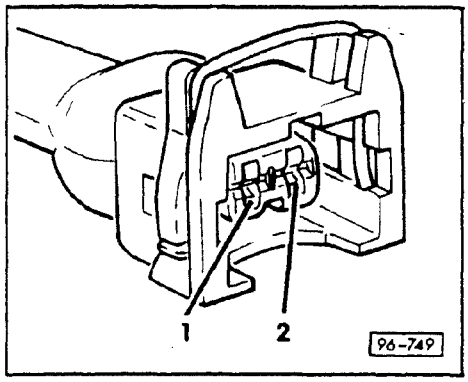

- check wiring between following terminals for continuity or short using wiring diagram

Idle switch harness connector terminal number		VAG 1598 test box terminal number
1	⟷	49 (9)*
2	⟷	48 (8)*

  - resistance must not be greater than 0.5 ohms (**continuity**)

* number in parentheses is the number of the terminal in the MPI control unit harness connector **A**

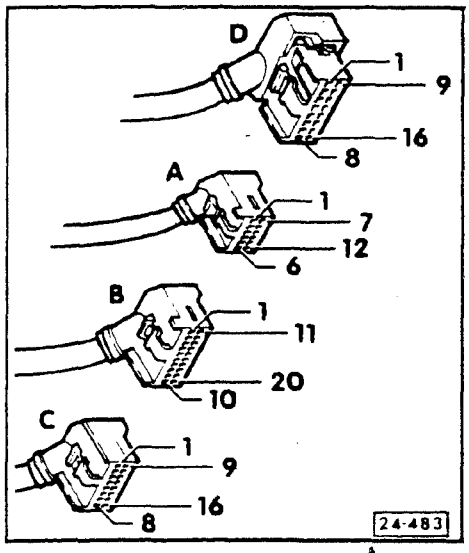

If a short or open circuit is detected between the idle switch harness connector and the test box

- replace or repair the actual wiring between control unit harness connector **A** and the idle switch harness connector as necessary

cardiagn.com

Engine speed sensor (G 28), checking

- disconnect gray harness connector from engine speed sensor (mounted on bracket on left side of engine)
- switch multimeter **US 1119** to resistance range

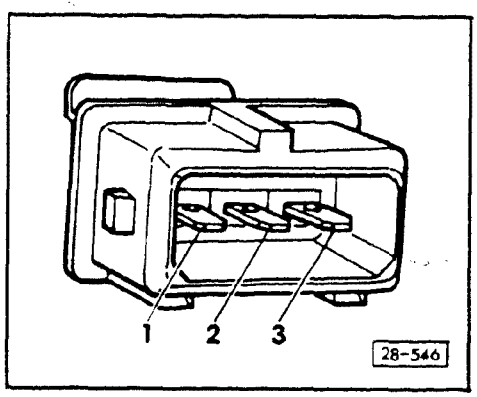

- connect multimeter between terminals **1** and **2** of speed sensor
  - must be approximately 1000 ohms

If **NO**

- replace engine speed sensor

If **YES**

- connect multimeter between terminals **2** and **3**
  - must be open (infinite ohms)

If **NO**

- replace engine speed sensor

If **YES**

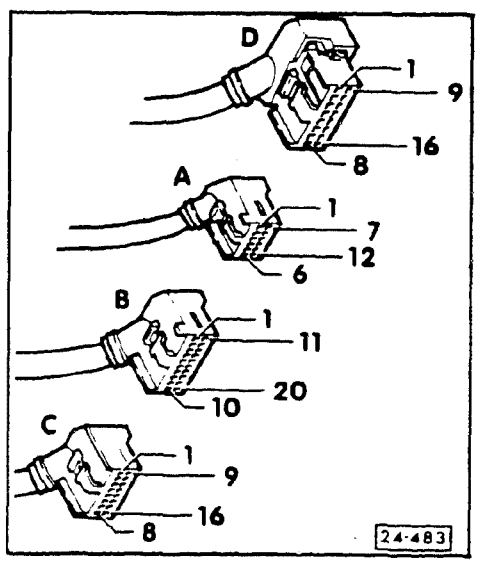

- connect **VAG 1598** test box to MPI control unit harness connector **C** using adaptor cable **VAG 1598/11**
  - control unit is not connected during this check

cardiagn.com

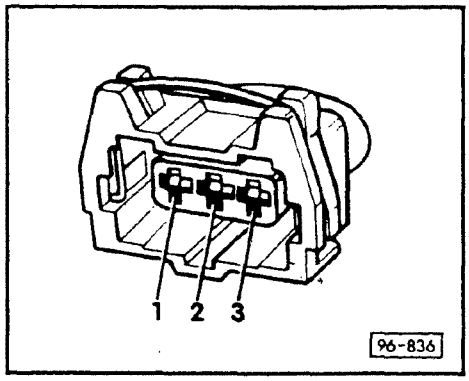

- check wiring between engine speed sensor harness connector and test box for continuity or short circuits using wiring diagram as follows:

Engine speed sender harness connector terminal number		Test box terminal number
1	⟷	1 (1)*
2	⟷	2 (2)*
3	⟷	3 (3)*

  - resistance must **NOT** be greater than 0.5 ohms (continuity)

* number in parentheses is the number of the terminal in the MPI control unit harness connector **C**

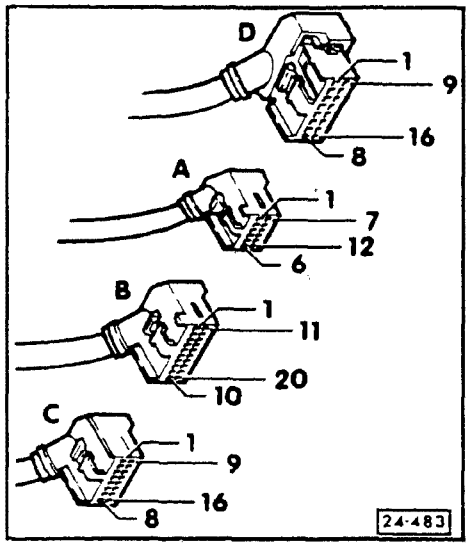

If a short or open circuit is detected between the engine speed sender harness connector and the test box

- replace or repair the actual wiring between control unit harness connector **C** and the engine speed sender harness connector as necessary

If wiring **OK**

- check teeth on flywheel ring gear as follows:
- remove engine speed sender mounting bracket which will expose a portion of the ring gear
- slowly rotate engine and observe condition of ring gear, checking for:
  - out of roundness
  - broken teeth
- replace ring gear if necessary

If ring gear **OK**

- replace MPI control unit

cardiagn.com

Tachometer triggering, checking

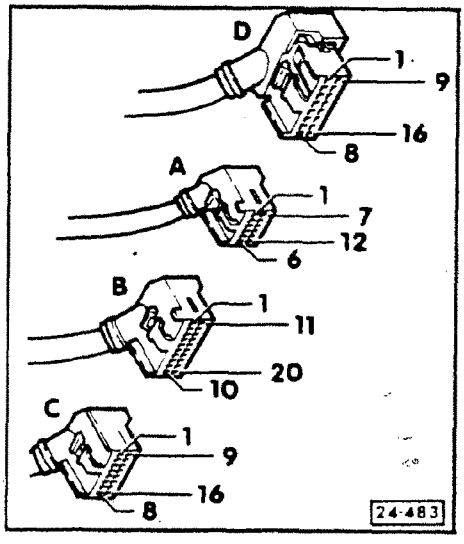

Note

Perform the following test only if tachometer does not indicate RPM. The tachometer is not triggered by the ignition coil but rather by a signal from the control unit.

If RPM is **NOT** indicated and their wiring is **OK**

- connect test box **VAG 1598** to MPI control unit using adaptor cable **VAG 1598/11**, see Repair Group D2 for additional information
- connect **VAG 1367** engine tester to measure engine RPM

Note

Connect green wire of **VAG 1367** to terminal **30** of test box rather than to ignition coil. Use **VW 1594** adaptor kit to make the connections.

- start engine and let idle
  - **VAG 1367** must show an RPM value, the actual number is not important, you are looking for the presence of an RPM signal at this time

If **YES**

- switch **OFF** ignition
- remove instrument panel
- switch multimeter **US 1119 (VAG 1526)** to resistance range
- check continuity between MPI control unit and instrument panel harness connector, using wiring diagram

If wiring **OK**

- eliminate fault in instrument panel harness connector

If there is **NO** RPM display on **VAG 1367**

- switch **OFF** ignition
- remove instrument panel
- disconnect **26** pin harness connector (yellow)
- start engine and let idle

If RPM is now displayed on **VAG 1367**

- fault is within instrument panel

cardiagn.com

If RPM is now displayed on **VAG 1367**

- fault is within instrument panel
  - see Repair Group 90 for additional information

If **NO** RPM display on **VAG 1367**

- check for disconnection between MPI control unit and instrument panel harness connector, using wiring diagram

If RPM is **NOT** indicated and their wiring is **OK**

- replace MPI control unit

cardiagn.com

Wheel speed signal, checking

- connect **VAG 1598** test box to MPI control unit using adaptor cable **VAG 1598/11**
  - control unit harness connector B is not connected
- connect **US 1115 (VAG 1527B)** LED tester to terminals **29** (signal) and **40** (plus) of test box
- raise front left wheel off the ground
- switch **ON** ignition
  - LED tester should light up (dimly)
- slowly rotate left wheel by hand
  - LED tester must become brighter (flash)

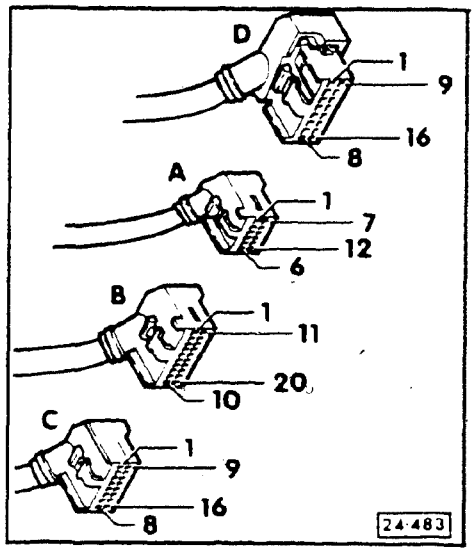

If LED tester does **NOT** flash or increase in brightness

- check for an open circuit between terminal **9** of MPI control unit harness connector **B** and instrument cluster, using wiring diagram

If wiring **OK**

- see Repair Group 91 for additional troubleshooting information

If LED tester flashes or increases in brightness

- switch **OFF** ignition
- connect harness connector **B** to **VAG 1598/11** adaptor cable
  - this puts the **VAG 1598** test box in parallel to the MPI control unit which is now "connected" to the system
- connect **US 1115 (VAG 1527B)** LED tester to terminals **20** (signal) and **40** (plus) of **VAG 1598** test box
- switch **ON** ignition
  - LED tester should light up (dimly)
- rotate left wheel slowly by hand
  - LED tester must become brighter (flash)

If **NO**

- replace MPI control unit

cardiagn.com

Fuel consumption rate indicator (On Board Computer), checking

Note

Perform the following test only if the fuel consumption display on the board computer is faulty or missing.

- connect **VAG 1598** test box to MPI control unit using adaptor cable **VAG 1598/11**, see Repair Group D2 for additional information
- switch multimeter **US 1119 (VAG 1526)** to 20 volt range
- connect multimeter between terminals **51** (ground) and **31** (signal) of test box
- start engine and let run while varying engine speed between 1000 and 4000 RPM
  - voltage must be between 0.3 and 6.0 volts depending on RPM

If voltage spec is obtained (even though board computer does **NOT** display a fuel consumption signal)

- switch **OFF** ignition
- remove instrument cluster

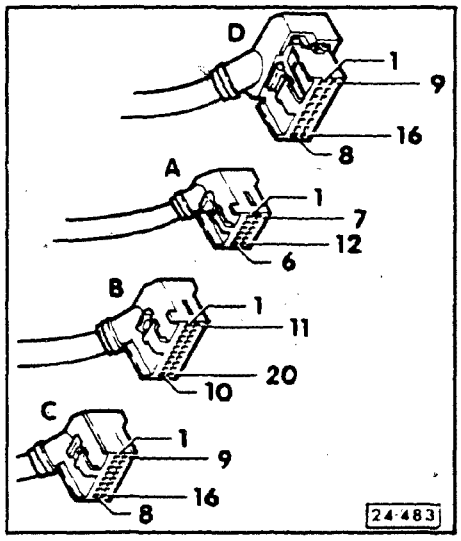

- switch multimeter **US 1119 (VAG 1526)** to resistance range
- check for continuity between wires of MPI control unit and black 10 pin harness connector for board computer

If wiring **OK**

- board computer faulty, repair or replace as necessary, see Repair Group 91 for additional information

If board computer **OK**

- troubleshoot instrument cluster, see Repair Group 90 for additional information

If voltage specification **NOT** obtained

- switch **OFF** ignition
- remove instrument cluster
- disconnect board computer harness connector
- start engine and let idle
  - must be between 0.3 and 0.6 volts depending on engine RPM

cardiagn.com

If **YES**

- board computer faulty, replace or repair as necessary

If **NO**

- check for a short to plus or ground between MPI control unit and board computer harness connector using wiring diagram

If wiring **OK**

- replace MPI control unit

cardiagn.com

A/C compressor cut-out, checking

When accelerating from a standing start or at low speeds, the A/C compressor cut-out causes the compressor clutch to de-energize momentarily thus removing a significant load from the engine at a time when additional power is needed.

Requirements
- A/C function **OK**
- **NO** faults in Fault Memory

- connect **VAG 1598** Test box to MPI control unit using **VAG 1598/11** adaptor cable, see Repair Group D2 for additional information
- connect **US 1115 (VAG 1527B)** LED tester between terminals **10** (signal) and **51** (ground)
- switch **ON** ignition
- switch **ON** A/C, operating mode "AUTO", temperature "LO" and blower speed "LO"
  - after 1 to 6 seconds LED tester must light up

Note

Some LED testers are more current sensitive than others resulting in dim illumination when the ignition is switched **OFF**, they should become noticeably brighter with the ignition switched ON.

- depress accelerator pedal to floor and hold in position
  - LED tester must shut off for approximately 12 seconds

Note

If the accelerator pedal is not held down long enough, the time that the LED tester is shut off could be reduced by a minimum of 3 seconds.

cardiagn.com

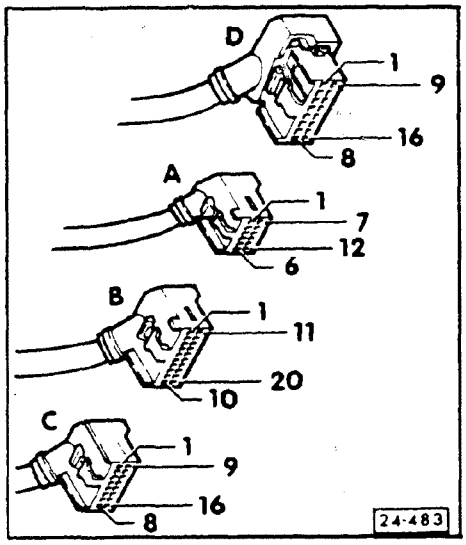

If **NO**

- remove harness connector **C** from **VAG 1598/11** adaptor cable
- switch **ON** ignition
- connect **US 1115 (VAG 1527B)** LED tester between terminals **40** (signal) and **10** (plus)
- completely depress accelerator pedal and hold in position
  - LED tester must shut off for approximately 12 seconds

Note

If the accelerator pedal is not held down long enough, the time that the LED tester is shut off could be reduced by a minimum of 3 seconds.

If **NO**

- replace MPI control unit

If **YES**

- check for disconnection of terminal **10** in control unit harness connector **C** using wiring diagram

If wiring **OK**

- check control unit function for solenoid operation **(J 32/J 153)**

cardiagn.com

A/C auxiliary signal, checking

Note

The MPI control unit boosts the idle speed, an amount proportional to load, when it senses that the A/C system is in operation.

- connect **VAG 1551**, see Repair Group D2 for additional information
- select "Basic Adjustment" option for the **VAG 1551**
- display indicator blocks on **VAG 1551**
- start engine and let idle
- switch **ON** A/C system, operating mode AUTO, temperature on high and blower speed on high
  - when switching A/C **ON** indicator field 7 must increase by at least 64

If **NO**

- switch **OFF** ignition and connect **VAG 1598** test box to MPI control unit using adaptor **VAG 1598/11**
- connect **US 1115 (VAG 1527B)** LED tester between terminals **11** and **51** of test box using **VW 1594** adaptor kit
- switch **ON** ignition
- switch **ON** A/C as described above
  - LED tester must light up

If **NO**

- disconnect harness connector **C** from MPI control unit

If LED tester lights up

- replace MPI control unit

If LED tester does **NOT** light up

- check for disconnection at terminal **11** of harness connector **C** using wiring diagram

If **NO** faults are found

- check A/C wiring using wiring diagram

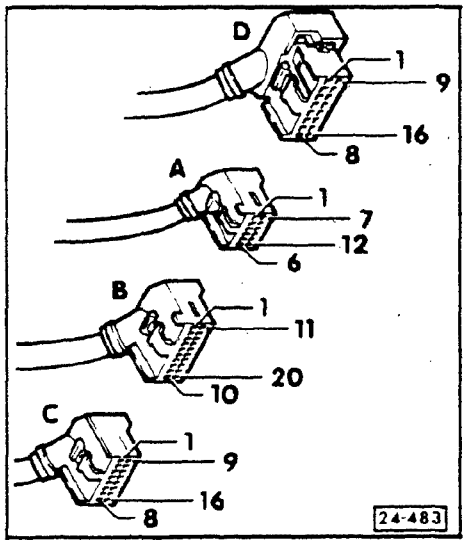

cardiagn.com

Oxygen sensor, checking

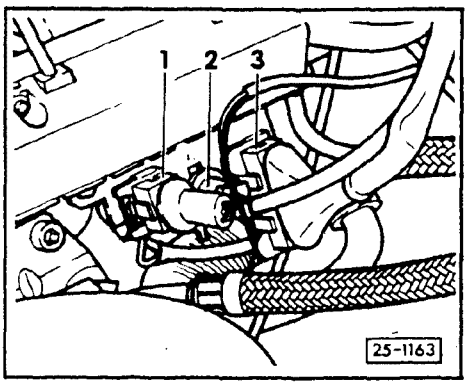

Control, checking

- disconnect harness connector **1** (next to intake manifold)
- switch multimeter **US 1119 (VAG 1526)** to 20 volt range

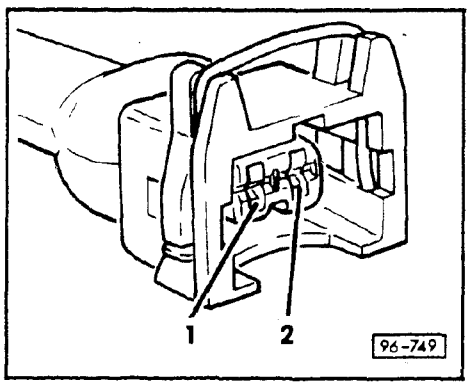

- connect multimeter between terminals **1** and **2** of harness connector
- start engine and let idle
  - must be between 12 and 14 volts

If **NO**

- proceed as follows
- check fuse **28**
- check continuity between terminal **2** of harness connector and fuse **28** using wiring diagram (if necessary check if wires are correctly installed in connector shell)
  - must be less than 0.5 ohms
- check continuity between terminal **1** of harness connector and ground
  - must be less than 0.5 ohms

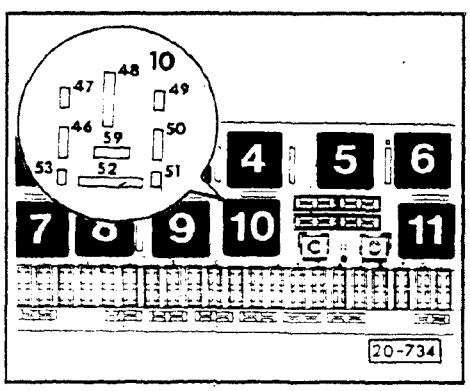

- check continuity between terminal **59** of fuel pump relay socket (in fuse relay panel, location **10**) and fuse **28**
  - must be less than 0.5 ohms

If wiring is **OK**

cardiagn.com

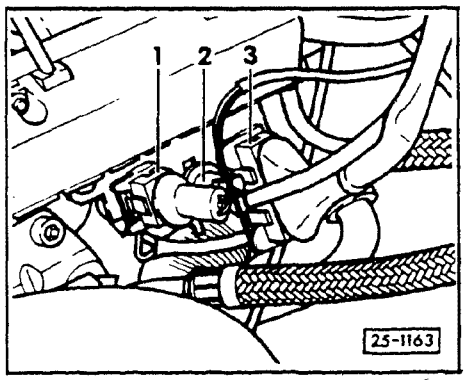

- connect test adaptor **VAG 1315 A/1** to harness connector
- switch multimeter **US 1119 (VAG 1526)** to 10 amp range
- connect multimeter to **VAG 1315 A/1** adaptor
- start engine and let idle
  - must be 0.5 to 3.0 Amps

If **NO**

- replace oxygen sensor

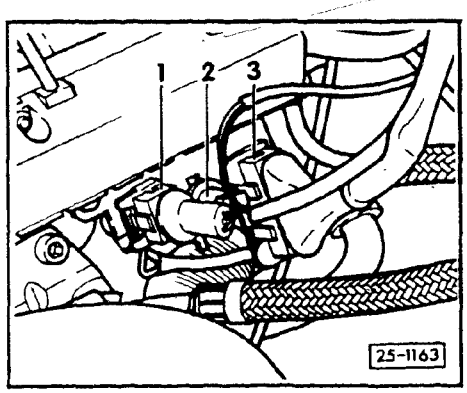

Triggering, checking

- disconnect oxygen sensor harness connector **2** (signal wire)
- switch multimeter **US 1119 (VAG 1526)** to 2 volt range
- connect multimeter between terminal of harness connector **2** and ground
- switch **ON** ignition
  - must be 400 ± 50 mV

If **NO**

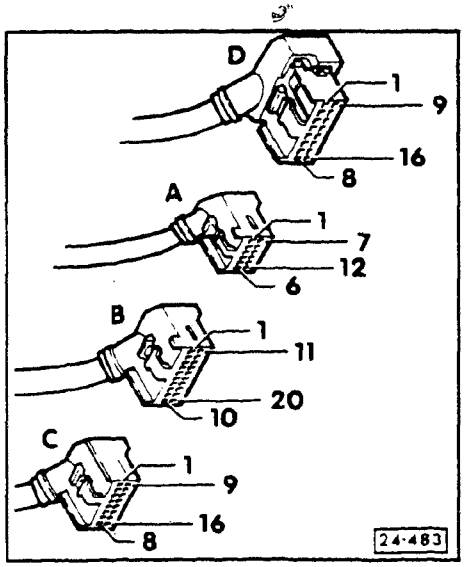

- disconnect harness connector **A** from MPI control unit
- connect **VAG 1598** test box to connector **A** using **VAG 1598/11** adaptor cable
  - control unit **NOT** connected
- switch multimeter **US 1119 (VAG 1526)** to resistance range

cardiagn.com

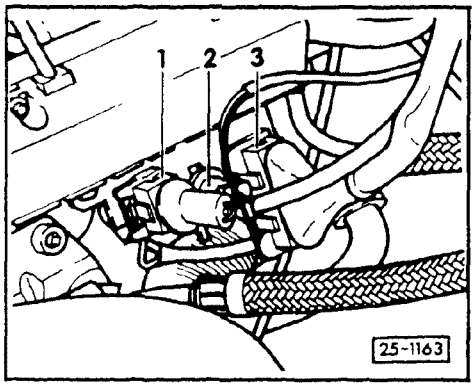

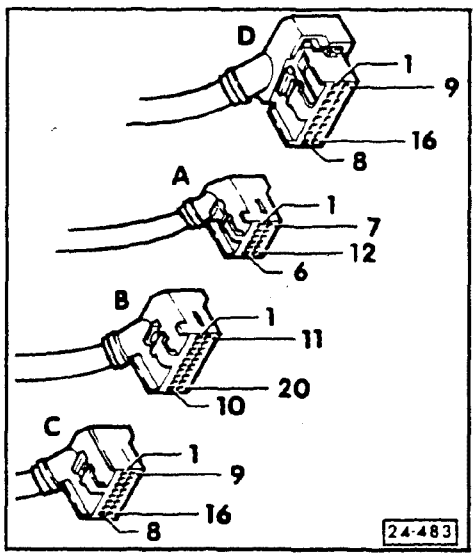

- check continuity between harness connector **2** and terminal **50** of **VAG 1598** test box
  - must be less than 0.5 ohms

If **NO**

- eliminate open circuit or disconnection between terminal **10** of MPI control unit harness connector **A** and signal wire **2** in engine compartment

If wiring and connections are **OK**

- switch **OFF** ignition

- disconnect harness connector **A** from MPI control unit
- connect **VAG 1598** test box to MPI control unit using **VAG 1598/11** adaptor cable
  - control unit harness connector **A NOT** connected
  - ensure that harness connector **D** is connected to the control unit; this can either be directly or by means of adaptor cable **VAG 1598/12** which was attached to harness connector **D** in an earlier step

- switch multimeter **US 1119** (**VAG 1526**) to 2 volt range
- connect multimeter between terminals **50** and **51** of **VAG 1598** test box
  - must be 400 ± 50 mV

If **NO**

- replace MPI control unit

To functionally check the oxygen sensor

- read test value block **8** of **VAG 1551**
  - must fluctuate around a value of **128**; should **NOT** stay at a constant **128**!

Note

For additional information regarding "Reading Test Block Values" see Repair Group D2.

cardiagn.com

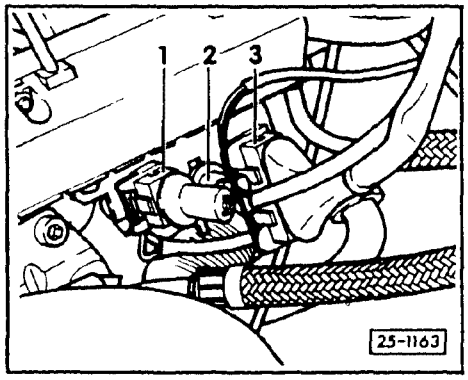

Removing/installing

- disconnect connectors **1** and **2**
- cut tie wrap
- unscrew oxygen sensor, for installation location and tightening torque see Repair Group 26
- when installing the oxygen sensor, note the following:
  - a new tie wrap must be installed in the exact location as the old one to prevent the oxygen sensor wire from contacting the exhaust
  - the oxygen sensor threads must be coated with an anti seize paste (if not already coated) ensure though, that this paste does **NOT** come in contact with the sensor slits

cardiagn.com

CONTINUED IN THE

BEGINNING OF NEXT ROW

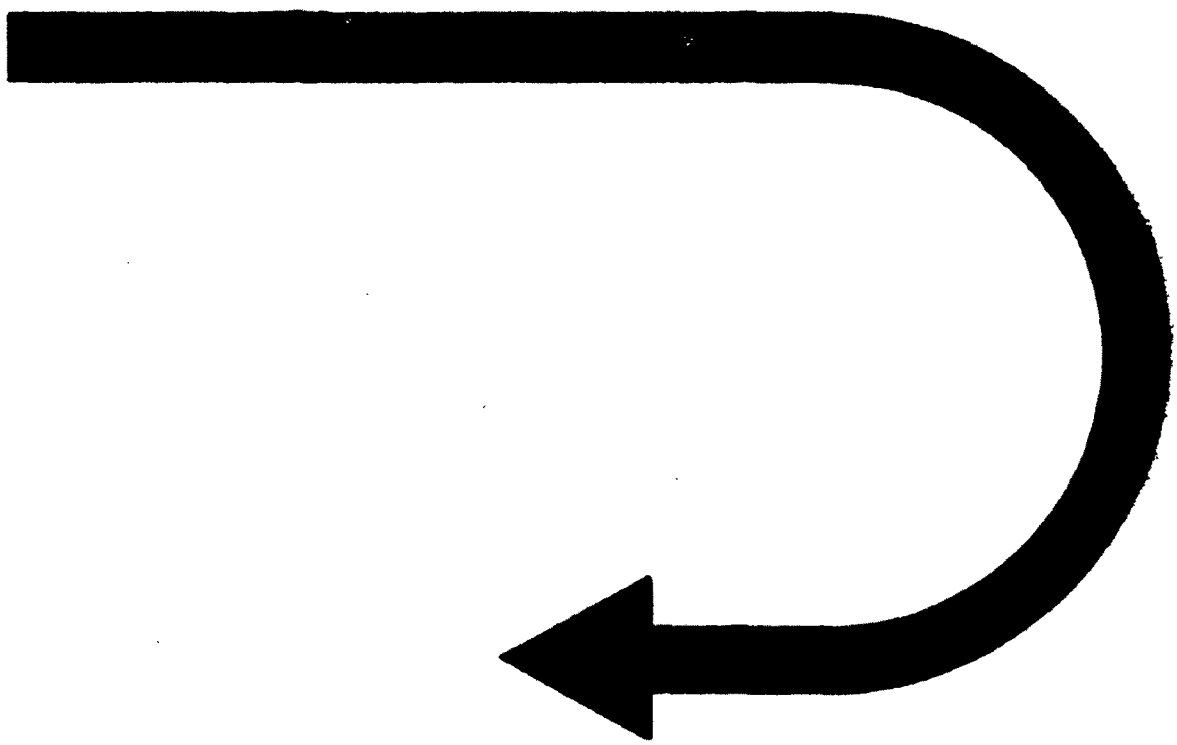

cardiagn.com

Idle speed and CO content, checking/adjusting

(Preferred method using VAG 1551 Diagnostic Tester)

> **CAUTION**
>
> Idle speed and CO content are inter-related and **MUST** be checked and adjusted together.

Requirements

- perform vehicle self diagnosis, eliminate or repair any faults, see Repair Group D2 for additional information
- engine warm, oil temperature 80°C (176°F) minimum
- throttle valve closed against stop
- all electrical consumers switched **OFF**
- A/C switched OFF
- fuel pressure measuring equipment **NOT** connected
- radiator cooling fan **NOT** running while taking measurements

- disconnect crankcase ventilation hose and plug off hose using 32 mm plug

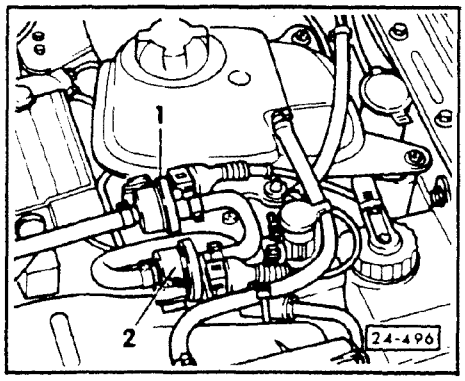

- disconnect harness connector **1** from carbon canister shutoff valve (**N 115**)

Idle speed, checking/adjusting

- select **VAG 1551** function **08** "read measuring value block" (For additional information see Repair Group D2)
- observe values in channels **4**, **5**, **6** and **8**, use chart (next page) for specifications and conversions

If **NO**, adjust idle speed as follows

- select function **04** "Introduction of basic setting" (For additional information see Repair Group D2)

cardiagn.com

Note

When function **04** is selected the following conditions will be initiated

- ignition timing will be fixed at 12°
- idle stabilizer current will be fixed at 540 ± 50 mA
- oxygen sensor control will be switched **OFF** (system will be in open loop)
- the adaptive or learned value of the idle stabilizer valve will be erased and reset to 0
- carbon canister shutoff valve **(N 115)** is switched **OFF**
- engine coolant temperature value is fixed at 130 (80°C)

Channel	Specification value	Corresponding test value	Description and calculation into physical values
1	135...160	+85°C...110°C	instantaneous coolant temp., displayed value minus 50 = ___°C
2	1...255		instantaneous engine load, a displayed value of 255 = Full load (theoretical) a lower value indicates less load
3	30...34	750...850 rpm	instantaneous engine speed, displayed value times 25 = ___ rpm
4	0...7 or 249...255	—	idle stabilization learning value, with Manual Trans. in neutral position or with Automatic selector in position **P** or **N** (Learning value average = **0**)
5	0...7 or 249...255	—	Learning value of idle stabilization system with Automatic in **D** position (Learning value average = **0**)
6	126...130	—	Repeat idle stabilization signal (average value = **128**)
7	See Repair Group D2 for a complete description of this channel.		
8	118...138	—	Oxygen sensor control (average value = **128**)
9	254, 255 0, 1, 2	—	Ignition distributor adjustment
10	—	—	From MPI-control unit calculated spark advance angle, indicator times 1.33 = ___° from TDC.

cardiagn.com

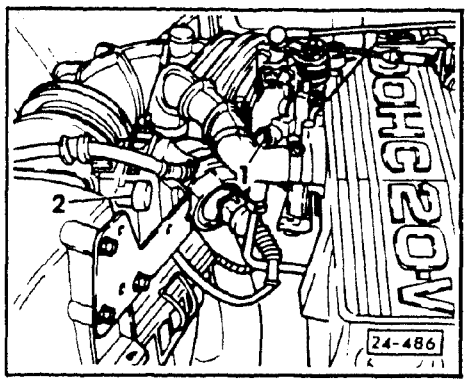

- while observing channel **3** turn idle adjustment screw **1** until a value of **31** to **33** appears
- re-select function **08** and observe channel **3** to verify that idle speed value is within specification, repeat procedure if necessary

CO content, checking/adjusting

Note

CO is affected by the Oxygen sensor control.

- select **VAG 1551** function **08** "read measuring value block" (For additional information see Repair Group D2)
- observe channel **8**
  - value must average between **118** and **138**

If **NO**, adjust CO content as follows

- switch OFF ignition

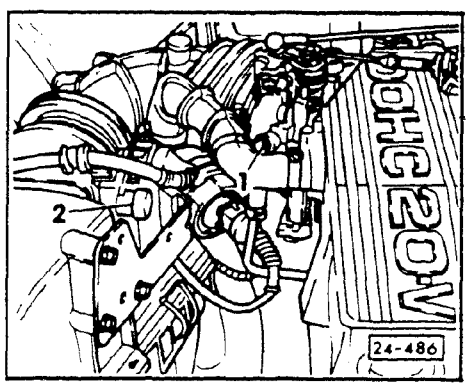

- remove protective cap **2** covering CO plug
- **lightly** center punch alloy plug covering CO set screw
- carefully drill hole in plug
- insert machine screw into drilled hole and withdraw screw/plug using pliers
- start engine and let idle
- re-select function **08** on **VAG 1551** and observe value on channel **8**
- rotate the CO adjustment screw in whichever direction necessary to obtain specification
  - channel **8** must average **128**

- connect **SUN EPA 75** CO tester (or EPA approved equivalent) to CO tap tube
- observe CO on meter
  - must be 0.3 to 1.2 volume %

If CO value is less than 0.3% but the channel **8** value is **OK**

- eliminate air leak in CO sampling line or line connections at CO tap and/or analyzer

If CO value is greater than 1.2 volume %

- eliminate air leak between engine and oxygen sensor

If specification has been successfully obtained

- install new "tamper-proof" cap over CO adjustment screw

cardiagn.com

Idle speed and CO content, checking/adjusting

(Alternate method to be used if VAG 1551 Diagnostic Tester not available)

CAUTION

Idle speed and CO content are inter-related and **MUST** be checked and adjusted together.

Requirements
- perform vehicle self diagnosis, eliminate or repair any faults, see Repair Group D2 for additional information
- engine warm, oil temperature 80°C (176°F) minimum
- throttle valve closed against stop
- all electrical consumers switched **OFF**
- A/C switched **OFF**
- Fuel pressure measuring equipment **NOT** connected
- Radiator cooling fan **NOT** running while taking measurements
- **VAG 1367** (or equivalent) connected to measure engine rpm

■ remove crankcase ventilation hose and plug off using a 32 mm plug

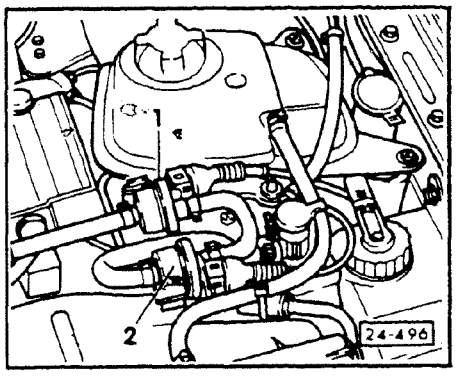

■ disconnect harness connector 1 from carbon canister shutoff valve (**N 115**)
■ remove cap from CO tap tube
■ connect **SUN EPA 75** CO tester (or **EPA** equivalent) to CO tap tube

Idle speed, checking/adjusting

■ start engine and observe engine speed on **VAG 1367**
- must be 750 to 850 rpm

cardiagn.com

If **NO**, adjust as follows

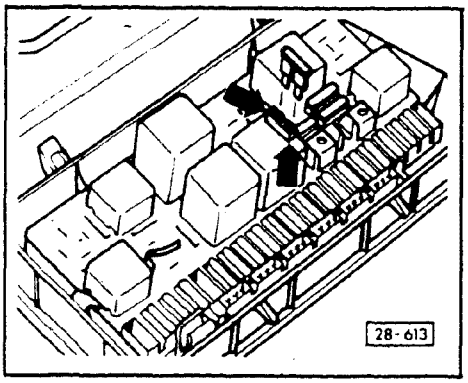

- with engine idling (must be less than 2000 RPM), install spare fuse in top of fuel pump relay (**arrows**) to initiate following conditions
  - ignition timing will be fixed at 12°
  - idle stabilizer current will be fixed at 540 ± 50 mA
  - oxygen sensor control will be switched **OFF** (system will be in open loop)
  - adaptive (learned) value of idle stabilizer valve is erased and reset to **0**
  - engine coolant temperature value is fixed at 130 (80°C), regardless of actual temperature

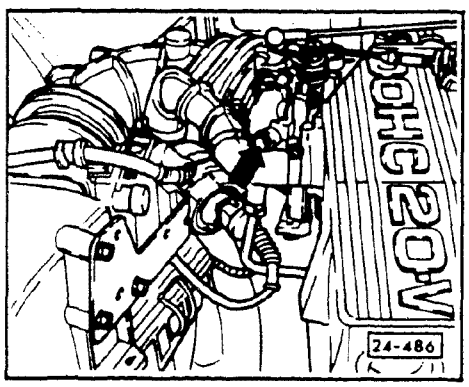

- rotate idle adjustment screw (**arrow**) until specification is obtained
  - must be 800 ± 25 rpm

CO content, checking/adjusting

- with engine at idle observe CO content
  - must be between 0.3 and 1.2 volume %

If NO, adjust as follows

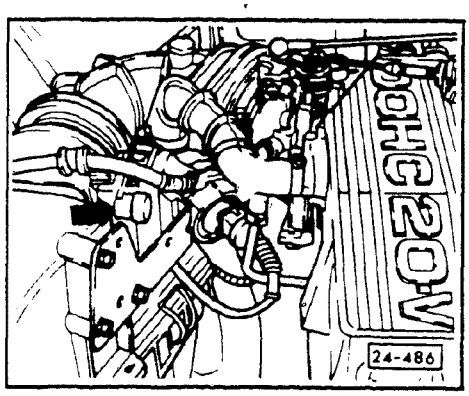

- remove protective cap (**arrow**) covering CO plug
  - **lightly** center punch alloy plug covering CO set screw
- carefully drill hole in plug
- insert machine screw into drilled hole and withdraw screw/plug using pliers
- start engine and let idle
- rotate CO adjustment screw (**arrow**) until specification is obtained
  - must be 0.75 ± 0.25 volume % CO
- re-check idle speed, readjust if necessary
- after idle speed and CO have been satisfactorily adjusted, remove fuse from top of fuel pump relay
- briefly raise engine speed over 2000 rpm and let idle
  - idle and CO content must be within checking specifications

cardiagn.com

If **NO**

- perform vehicle self diagnosis and correct as necessary

If **OK**

- disconnect test equipment
- install new "tamper-proof" cap over CO adjustment screw

cardiagn.com

Idle stabilization, checking

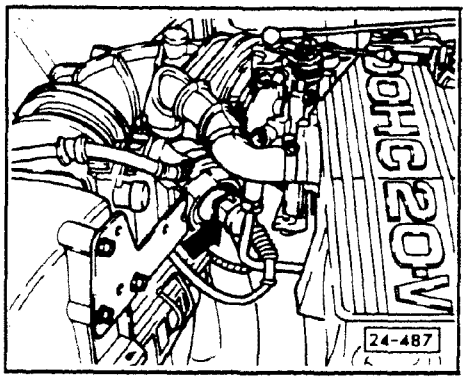

Electrical check

- disconnect harness connector from idle stabilizer valve (**N 71**) (**arrow**)

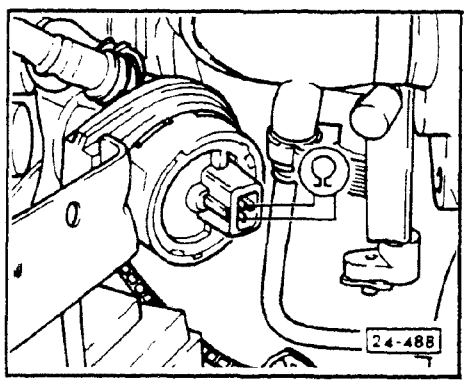

- switch multimeter **US 1119 (VAG 1526)** to resistance range
- measure resistance between idle stabilizer valve connector terminals
  - must be from 7.5 to 8.5 ohms

If **NO**

- replace idle stabilizer valve

Mechanical check

- remove idle stabilizer valve

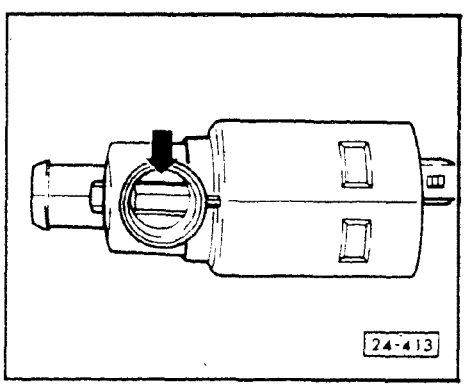

- check rotating valve for ease of movement and visible wear or scratches

> **CAUTION**
>
> Do **NOT** use a screwdriver (or any tool) to rotate the idle stabilizer valve during visual inspection.

- re-connect idle stabilizer valve harness connector (valve removed)
- perform Output check diagnosis, see Repair Group D2 for additional information
  - when diagnosis reaches step for idle stabilizer valve observe whether valve runs properly from stop to stop

If there is visible wear or rough movement

- replace idle stabilizer valve

cardiagn.com

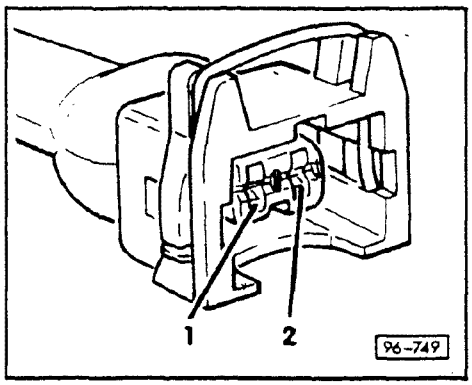

Idle stabilizer valve wiring, checking

- disconnect idle stabilizer valve harness connector

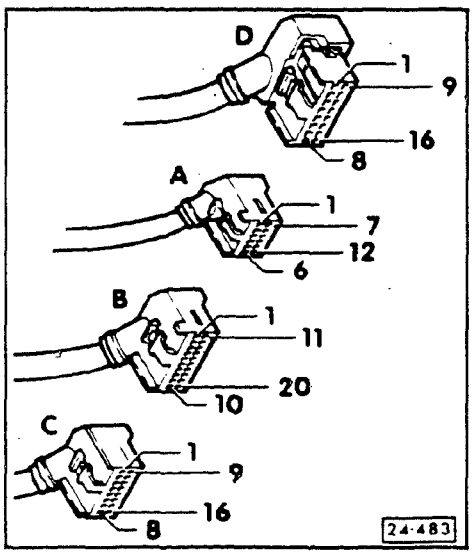

- disconnect harness connector **D** from MPI control unit
- connect **VAG 1598** test box to connector **D** using **VAG 1598/12** adaptor cable
  - control unit **NOT** connected
- switch multimeter **US 1119 (VAG 1526)** to resistance range
- check continuity between terminal **1** of idle stabilizer harness connector and terminal **11** of **VAG 1598** test box
  - must be less than 0.5 ohms
- check continuity between terminal **2** of idle stabilizer harness connector and terminal **7** of **VAG 1598** test box
  - must be less than 0.5 ohms
- check idle stabilizer harness connector wires for short to each other or to + (terminal **8** of **VAG 1598**) or to ground (terminal **3** of **VAG 1598**)
- if necessary: eliminate short circuit or disconnection by repairing or replacing as necessary

If Idle stabilizer valve AND related wiring **OK** but valve will **NOT** energize

- replace MPI control unit

cardiagn.com

MPI (Multi Point Injection) control unit, voltage supply checking

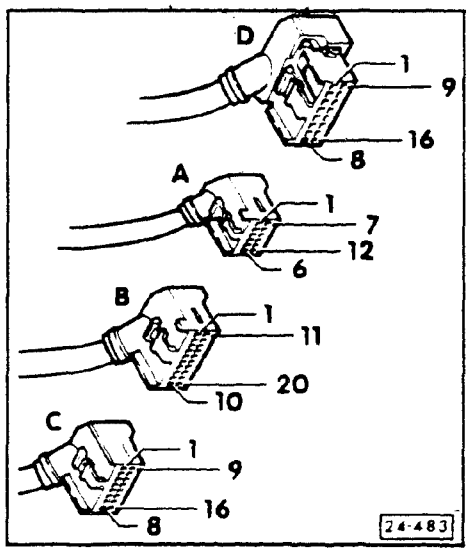

- connect **VAG 1598** test box to MPI control unit harness connector **D** using adaptor cable **VAG 1598/12**
  - control unit is not connected during this check

- switch **ON** ignition
- connect **US 1115 (VAG 1527B)** LED tester between terminal **8** (– via ignition) of test box and terminals **1**, **2**, **3** and **16** (ground connections)
  - LED tester must light up for each measurement

If **NO**

- check for open circuit between ground wire connections at stud on intake manifold and MPI control unit harness connector D using wiring diagram, replace or repair as necessary

> **CAUTION**
>
> Inspect the grounding stud on the intake manifold for looseness, dirt and corrosion. Stud must be clean and tight. Be careful when using non conductive locking compounds on the stud threads because they could prevent a good ground which in turn could introduce serious electrical problems.

Note

Terminals **1**, **2**, **3** and **16** of the harness connector correspond to terminals **1**, **2**, **3** and **16** of the test box.

cardiagn.com

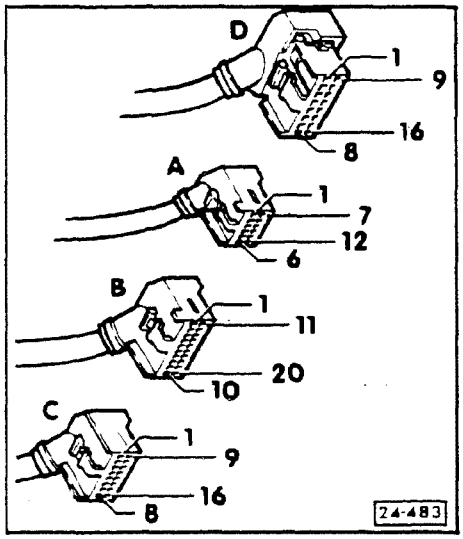

- connect **VAG 1598** test box to MPI control unit harness connector **C** using adaptor cable **VAG 1598/11**
  - control unit is not connected during this check
- connect LED tester between terminal **40** of test box and engine ground
  - LED tester must light up

If **NO**

- check for open circuit between terminal **20** of MPI control unit harness connector **B** and central electric, using wiring diagram
- repair or replace as necessary

cardiagn.com

Index

4-Cylinder w/CIS-E Motronic

Airflow sensor
- checking/adjusting, 25-60
- potentiometer, checking/adjusting 25-70

CIS-E Motronic system
- component locations 25-10
- electrical checks 25-180
- repairing 25-5
- system components 25-20

Cold start valve
- checking 25-160

Deceleration fuel shut-off
- checking 25-150

Engine restart, warm-up and acceleration enrichment
- checking 25-140

Engine settings
- ignition timing, idle speed, CO content, checking/adjusting 25-170

Fuel pressure
- checking 25-50

Idle and full throttle switches
- checking/adjusting 25-80

Injection quantity
- comparative measurement 25-55

Oxygen sensor
- control, checking 25-120

Starting enrichment
- checking 25-130

System precautions
- chart 25-30

Technical data
- chart 25-40

Throttle cable
- adjusting 25-110
- component layout 25-100

Throttle valve
- basic adjustment 25-90

★ ALL REVISED since last filming

cardiagn.com

CIS-E Motronic (combined fuel and ignition system), repairing

Engine code: 3A

Note

The CIS-E Motronic control unit is equipped with a fault memory system. Before performing repairs, adjustments, or troubleshooting, activate the fault memory system — see Repair Group D2 for additional information.

> **CAUTION**
>
> Control limits are sometimes exceeded during checking and adjustment work. These over-limits are recognized as faults by the control unit and stored in the Permanent Fault Memory.
>
> Be sure to erase the Permanent Fault Memory system after all checking and adjustment work has been performed. See Repair Group D2.

Note

The fuel injection part of the CIS-E Motronic is handled in Repair Group 25. Components of the ignition system such as distributor, ignition coil, etc. are found in Group 28.

cardiagn.com

CIS-E Motronic combined fuel and ignition system

Component location — overview

WARNING

Fire hazard. Do not smoke or have anything in area that can ignite fuel.

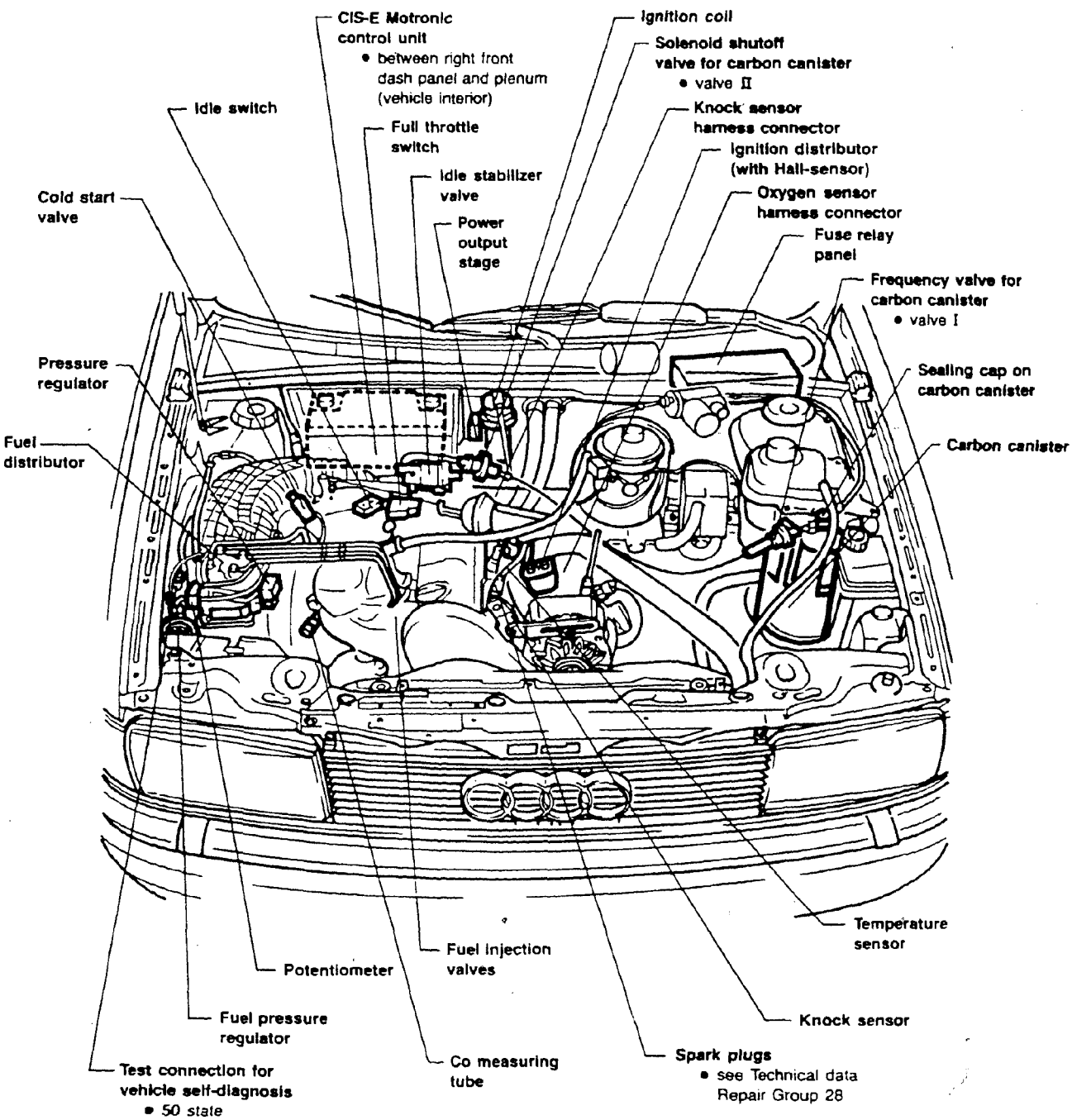

cardiagn.com

Notes

- replace seals and o-rings
- secure hose connections with either screw clamps or new spring clamps
- electrical components require 11.5 volts minimum for proper operation

WARNING

Fire hazard. Do not smoke or have anything in area that can ignite fuel.

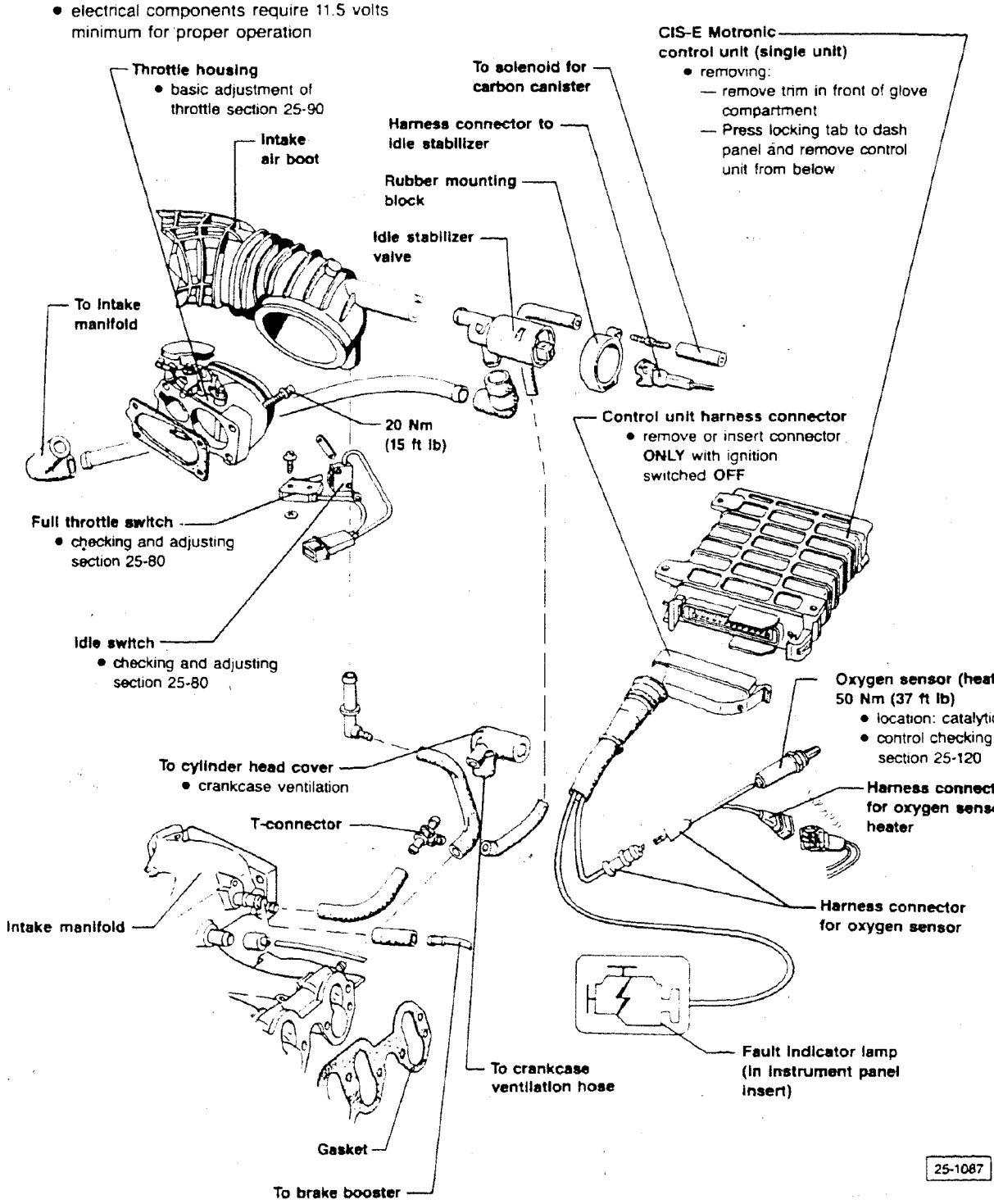

cardiagn.com

Notes

- replace seals and o-rings
- secure hose connections with either screw clamps or new spring clamps
- electrical components require 11.5 volts minimum for proper operation

WARNING

Fire hazard. Do not smoke or have anything in area that can ignite fuel.

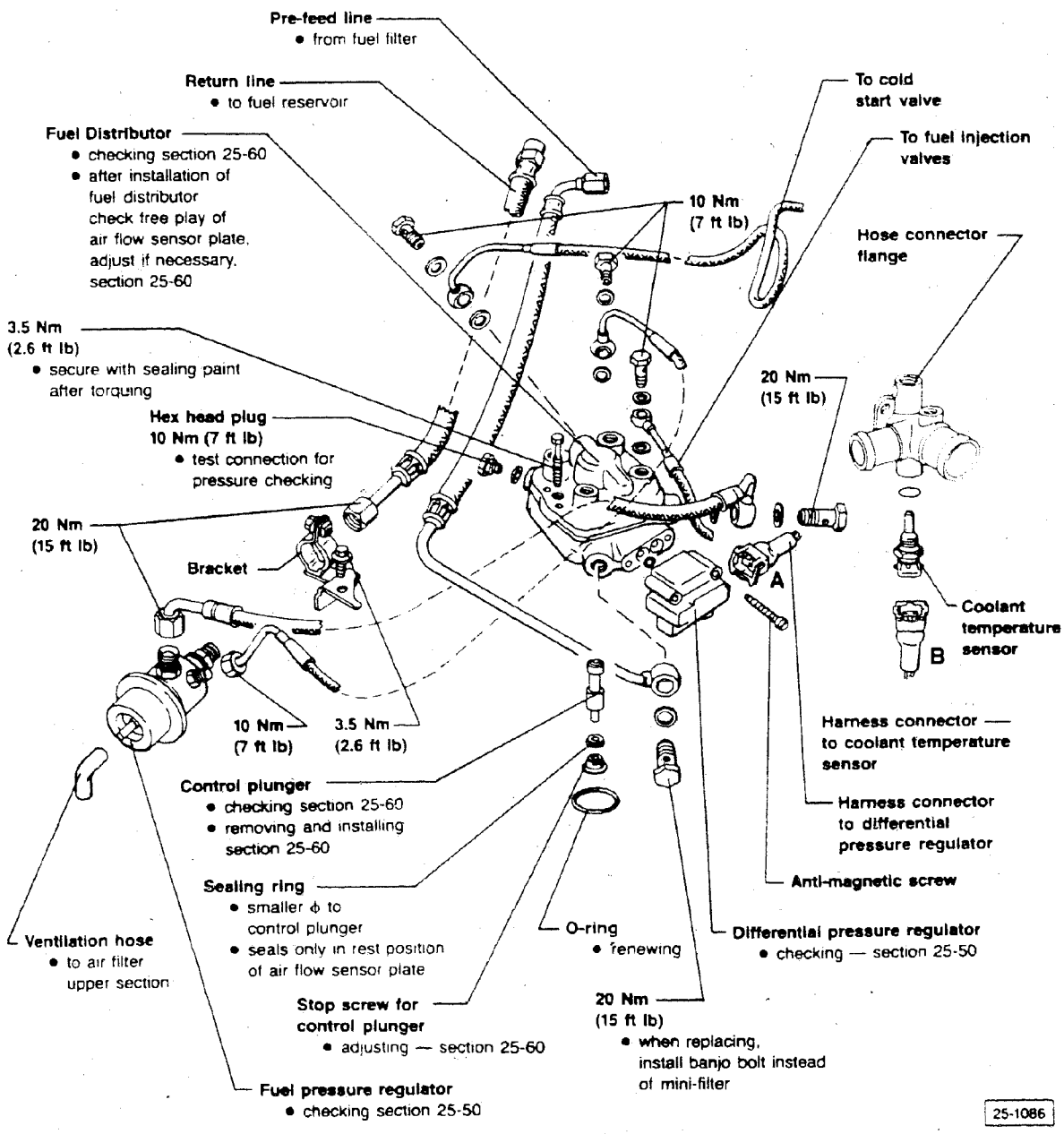

cardiagn.com

Notes

- replace seals and o-rings
- secure hose connections with either screw clamps or new spring clamps
- electrical components require 11.5 volts minimum for proper operation

WARNING

Fire hazard. Do not smoke or have anything in area that can ignite fuel.

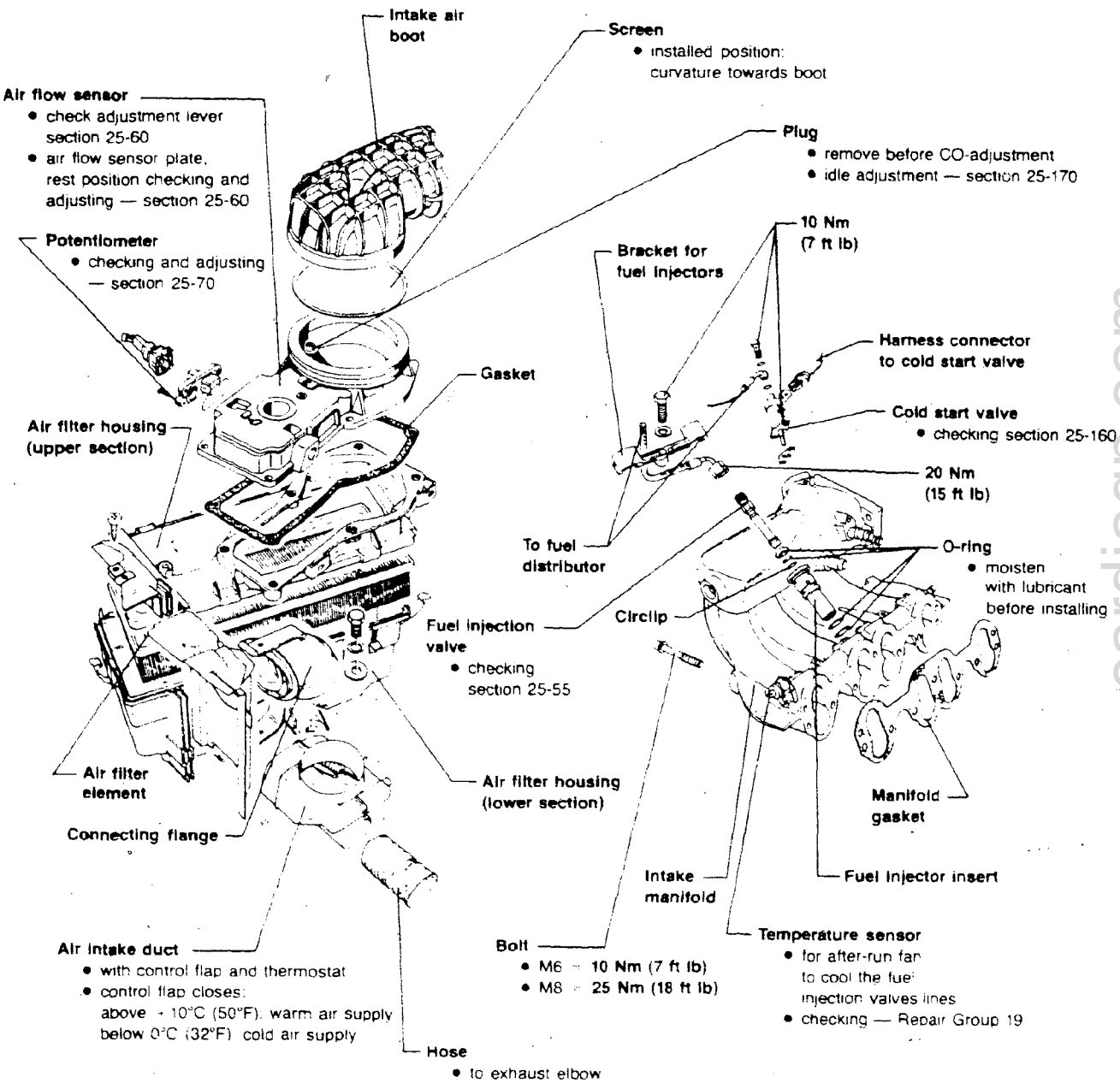

cardiagn.com

System precautions

CAUTION

Be alert when you work on the engine. High voltage can injure you and damage components.

Turn ignition OFF:

- when connecting or disconnecting tester leads to ignition system
- when connecting or disconnecting ignition wires
- when washing the engine

Don't forget about the battery:

- do not disconnect battery when engine is running
- for emergency starting use fast charge for 15 seconds only and not more than 16.5 volts
- disconnect battery and CIS-Motronic control unit when using arc, spot, or electrical welding equipment

When testing the system:

- do not apply voltage to control unit to simulate output signals
- when coil wire (terminal **4**) is disconnected from distributor, always ground using jumper wire
- with high tension wire disconnected and un-grounded do not crank engine (example: compression test)

When applying heat:

- if components are heated above 80°C (175°F) from paint dryer or steam cleaner, wait for components to cool before starting engine

When towing:

- vehicles with ignition problems (or where problems may be suspected) must have the power output stage of the ignition coil disconnected

Rules of cleanliness

First:

- clean connecting points before loosening

When fuel system is open:

- do not use compressed air if you don't need it
- move vehicle only if you must
- if you cannot finish repairs, carefully cover parts with plastic or paper — not with rags

Use clean parts only:

- do not unwrap new parts before needed
- only use new parts, not loose or unwrapped parts from tool box
- lay removed parts on clean surface. Cover with plastic or paper — not with rags

cardiagn.com

Technical data

Engine code		3A
Ignition timing*	checking value	4° to 8° Before TDC
	adjusting value	6 ± 1° Before TDC
Idle speed* (speed not adjustable, controlled by idle stabilization)		780 to 900 RPM
CO-content*	checking value (on CO-measuring tube)	0.2 to 1.2 vol. %
	adjusting value (adjustment conducted via differential pressure regulator control current-adjustment)	0 to 5 mA (fluctuating)
CIS-E Motronic control unit Part Number		893 907 404
RPM limit		6300 to 6500 min
Fuel deceleration via control current reversal on differential pressure regulator		
Throttle switch, switching points	Switch I — idle switch	0.15 to 0.5 mm (0.006 to 0.020 in.) between point where switch begins operating and throttle lever stops
	Switch II — full throttle switch	10° ± 2° before full stop

*Observe test and adjustment conditions — see Engine settings, section 25-170

cardiagn.com

Technical data

System pressure	6.1 to 6.5 bar (88 to 94 psi) gauge pressure
Differential pressure	
1 — harness connector removed from differential pressure regulator	approximately 0.3 to 0.5 bar (4 to 7 psi) **below** system pressure
2 — harness connector reconnected to differential pressure regulator ■ activate starter for about three seconds	approximately 1.3 to 1.6 bar (19 to 23 psi) **below** system pressure
Residual pressure	
after at least 10 minutes	3.3 bar (47.8 psi) gauge pressure
after at least 20 minutes	3.2 bar (46.4 psi) gauge pressure
Fuel injector(s)	
opening pressure	3.7 to 4.8 bar (54 to 70 psi) gauge pressure
Injection quantity tolerance within a set of injector(s): idle measurement (position **1** of **1348**/1) at 20 ml fuel quantity	maximum 2.0 ml
full throttle measurement (position **2** of **1358**/1) at 80 ml fuel quantity	maximum 8.0 ml

Differential pressure regulator resistance	15 to 25 ohms
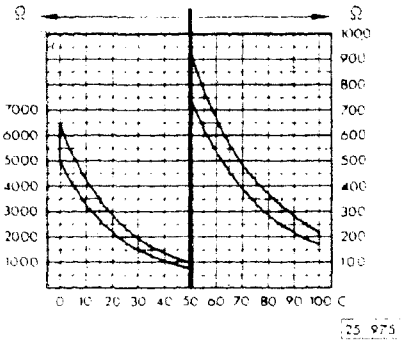	Temperature sensor resistance between terminals Example 1: 2500 ohms @ 20°C (68°F) Example 2: 200 ohms @ 100°C (212°F)
Cold start valve resistance	approximately 10 ohms

cardiagn.com

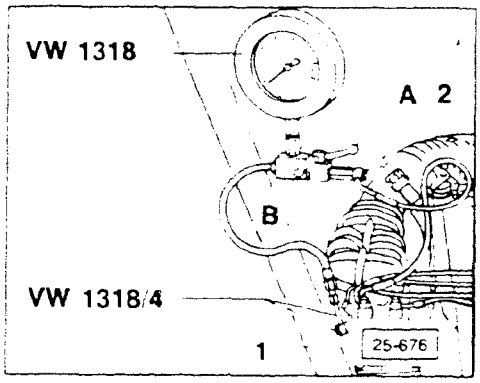

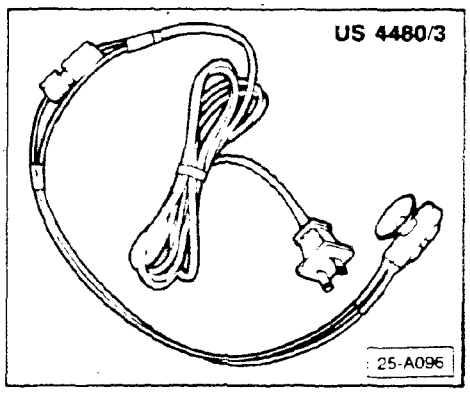

Fuel pressure, checking

Connecting VW1318 pressure tester

- connector pressure tester **VW1318** to measuring location **1** on fuel distributor using adaptor **VW1318/4**
- connect bolt and line **2** from cold start valve to pressure tester
- turn pressure tester valve to the closed position:
  A = opened
  B = closed

Connecting remote control US4480/3

- remove fuel pump relay from fuse relay panel (position **10**)
- switch **US4480/3** to **OFF** position
- jump the relay socket with remote control **US4480/3**

cardiagn.com

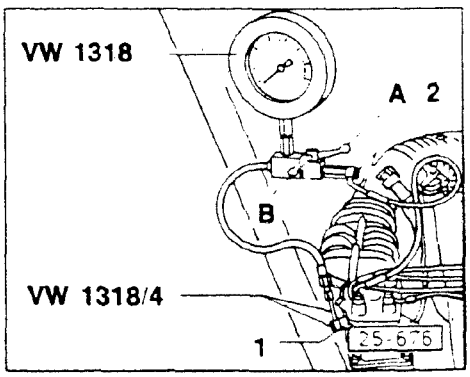

System pressure, checking

Check these first:

- fuse **13 OK**
- fuel pump **OK** (checking, Group 20)

Always use new sealing rings. Observe the safety precautions, section 25-30.

- open valve on pressure tester **VW1318** and activate remote control **US4480/3**
  - 6.1 to 6.5 bar (89 to 94 psi) gauge pressure

If system pressure too high:
- remove return hose from differential pressure regulator (to return line) and place in a container (to catch any discharged fuel)
- repeat previous test

If system pressure **OK** now:
- check return line for obstructions or pinching, repair as necessary

If system pressure too high:
- replace fuel pressure regulator

cardiagn.com

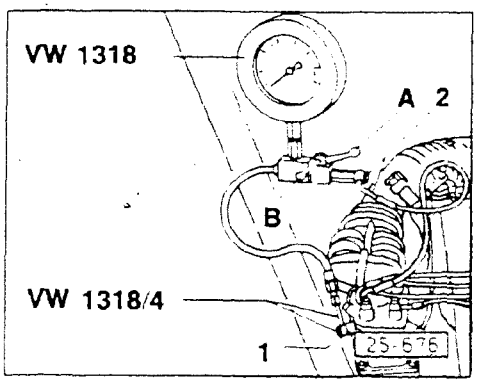

Differential pressure part I, checking

- close valve on **VW1318** pressure tester
- disconnect harness connector from differential pressure regulator
- activate remote control **US4480/3**
  - pressure must be 0.3 to 0.5 bar (4.3 to 7.3 psi) **BELOW** system pressure previously observed on gauge

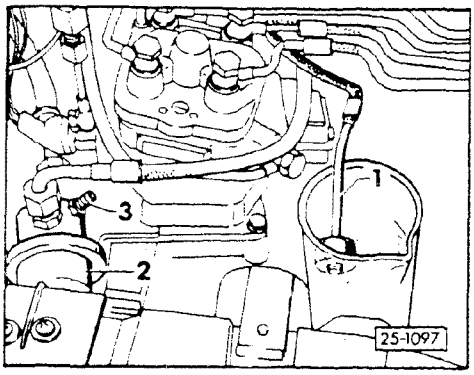

If pressure difference **NOT OK**

- disconnect small diameter fuel line **1** from fuel pressure regulator **2** and place in a beaker
- plug opening **3** on fuel pressure regulator
- switch **ON** remote control **US4480/3** for one minute and measure quantity of discharged fuel:
  - 130 to 150 CCs

If **NO**

- replace differential pressure regulator
- reconnect fuel line **1** to fuel pressure regulator

cardiagn.com

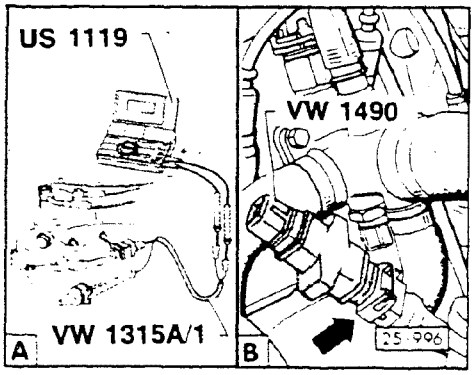

Differential pressure part II, checking

- connect multimeter **US1119** to differential pressure regulator, (see **A**)
- remove harness connector from coolant temperature sensor and insert 15K ohm side of bridge adaptor **VW1490** into harness connector, (see **B**)

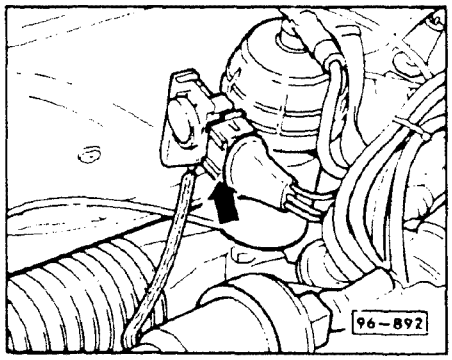

- remove harness connector from power output stage of ignition coil (**arrow**)
- activate starter for approximately 5 seconds, do **NOT** turn **OFF** ignition
- switch **ON** remote control **US4480/3**
  - pressure must be 1.3 to 1.6 bar (18.9 to 23.2 psi) **BELOW** system pressure previously observed on gauge
  - control current must be approximately 110 mA

If pressure difference and control current **NOT OK**

- perform electrical checks, section 25-180

or

- replace control unit

cardiagn.com

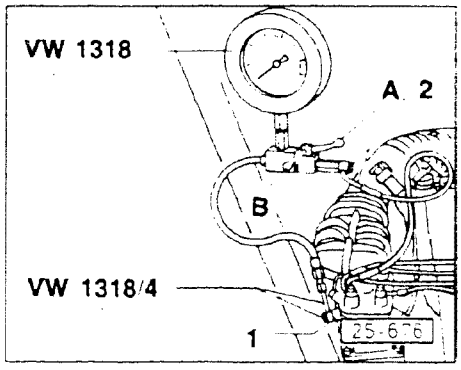

Residual pressure, checking

Note

This procedure is required only for hot start problems.

- switch **ON** remote control **US4480/3** for approximately five seconds
- observe pressure drop on **VW1318**, minimum pressure should be:
  - 3.3 bar (48 psi) after 10 minutes
  - 3.2 bar (46 psi) after 20 minutes

If the pressure drop is greater:

- check fuel pump check valve (see Group 20)
- check air flow sensor plate free play, section 25-60
- check sealing rings in fuel distributor, replace if necessary

cardiagn.com

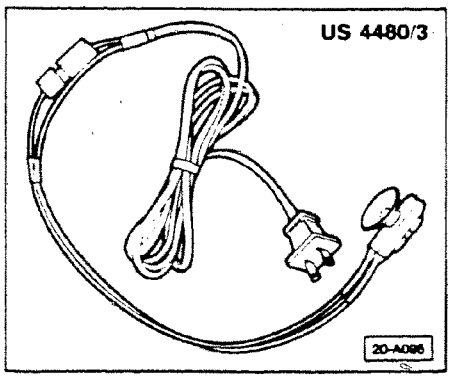

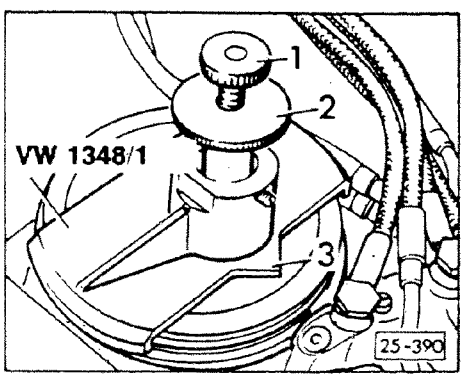

Injection quantity, comparative measurement

Check this first:

- fuse **13 OK**

- remove fuel pump relay from fuse relay panel (position **10**)
- connect remote control **US4480/3**

- remove injector bracket
- remove fuel injectors from seats and insert into openings of fuel analyzer **VW1348/2B**

Note

Carefully route the fuel lines to avoid pinching and bending.

- remove intake air boot

Note

Before installing tool **VW1348/1**, pull slide **2** up to the upper stop. Place the tool centrally on the edge of the air flow sensor. Edge **3** must point in the direction of the fuel distributor.

- install tool **VW1348/1**
- push slide **2** down to stop
- rotate adjusting screw **1** until the base of the magnet contacts the sensor plate mounting screw (sensor plate in rest position)

- pull slide **2** of adjuster up to first stop position (idle setting)
- switch **ON** remote control **US4480/3**
- turn adjusting screw **1** counter-clockwise until beginning of fuel spray is seen at tip of one injector
- drain test analyzer (injection valves can remain inserted)

cardiagn.com

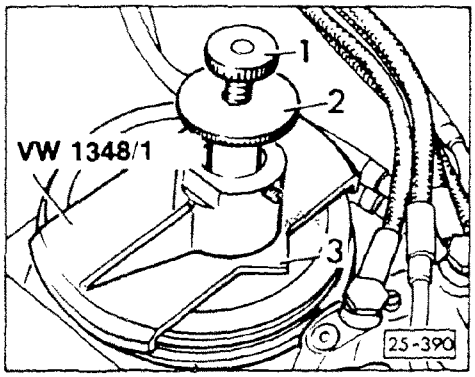

Idle speed fuel injection quantity, measuring

- lift adjusting slide **2** to first stop (simulated idle)
- switch **ON** remote control **US4480/3** until fuel level of one measuring tube reaches 20 ml level
- note injector spray patterns
  - must be even and cone shaped
  - **ALL** injectors should have the same spray pattern

If one valve is not spraying in a cone shape, lift sensor plate briefly and repeat test.

- compare amounts of fuel for all injectors (hold test analyzer level while observing)
- permissible difference between fuel quantities in all of the tubes must **NOT** be more than:
  - 2.0 ml **maximum**

If fuel quantity in tubes differs between a high and low of more than 2.0 ml:
- interchange those two injectors and repeat the test

If difference of injected fuel did **NOT** change after interchanging the injectors:
- check for a pinched fuel line, or the possibility of a defective fuel distributor, repair as necessary

If difference of injected fuel **DOES** change after interchanging the injectors:
- replace those fuel injectors

cardiagn.com

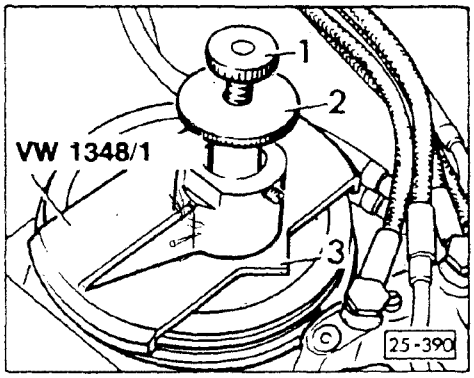

Full throttle fuel injection quantity, measuring

- empty fuel analyzer (injection valves may remain inserted)
- lift adjusting slide **2** to last stop (simulated full throttle)
- switch **ON** remote control **US4480/3** until fuel level on scale of one measuring tube reaches 80 ml
- note injector spray pattern
  - must be even and cone shaped
  - **ALL** injectors should have the same spray pattern

If **NO**
- briefly lift up sensor plate once, fully, and repeat test
- compare amount of fuel for all injectors (keep analyzer tubes level while observing)
  - permissible difference between fuel quantity in all tubes must **NOT** be more than: 8.0 ml

If fuel quantity in tubes differs between a high and low of more than 8.0 ml:
- interchange those two injectors and repeat the test

If difference of injected fuel did **NOT** change after interchanging the injectors:
- check for a pinched fuel line, or the possibility of a defective fuel distributor, repair as necessary

If difference of injected fuel **DOES** change after interchanging the injectors:
- replace those fuel injectors

Immediately after measuring, test injectors for leakage as follows:
- place sensor plate in rest position
- switch **ON** remote control **US4480/3** for approximately two minutes
  - injectors must **NOT** drip

cardiagn.com

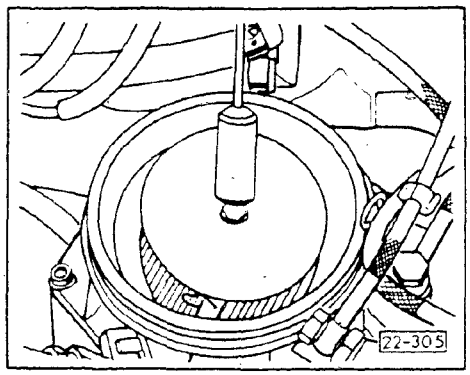

Airflow sensor, checking

Sensor plate lever/control plunger, checking

- actuate starter for 10 seconds (with coil wire disconnected and grounded) or activate remote control **US 4480/3** for 10 seconds (see section 25-50 for connecting remote control)
- using pliers or a magnet, lift sensor plate through entire range of lever and control plunger travel
  - an even resistance must be felt
- move sensor plate quickly from raised position to rest position
  - **NO** resistance should be felt

If **YES**

- replace air flow sensor
- if sensor plate lever is hard to move upward, but moves freely downward
  - control plunger is sticking
- replace fuel distributor

cardiagn.com

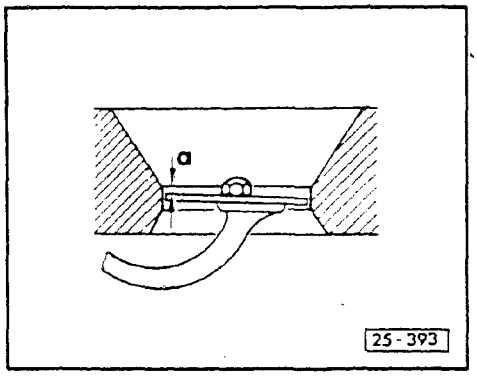

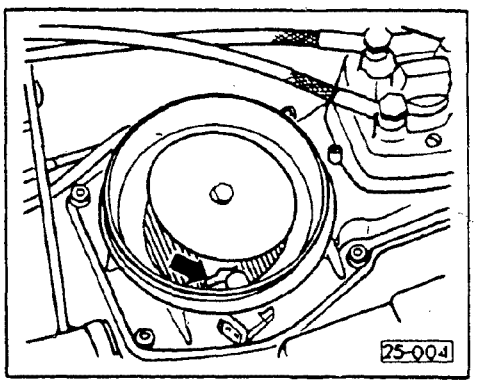

Air flow sensor plate rest position, checking/adjusting

Checking

- upper edge of air flow sensor plate must be below lower edge of air cone
  - **a** = 1.9 to 3.0mm (0.875 to 0.118 in)

Adjusting

- raise air flow sensor plate
- adjust position of sensor plate by bending wire clip (**arrow**)

Note

You should try to achieve the smaller setting (1.9mm) if at all possible.

CAUTION

Do not scratch venturi of air flow sensor.
Do not bend leaf spring.

cardiagn.com

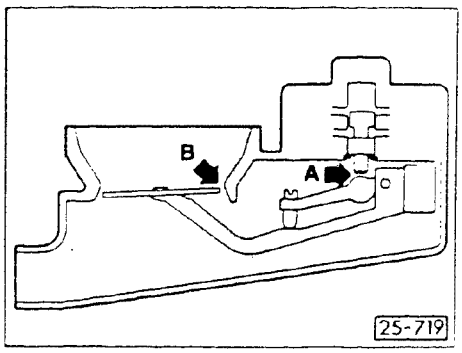

Air flow sensor plate free play, checking

Note

Free play is noted between the control plunger and sensor plate lever (arrow **A**). It is measured on the side of the air flow sensor facing the fuel distributor (arrow **B**).

Check these first:

- rest position of sensor plate **OK**
- CO adjustment **OK**

- activate starter for 10 seconds (with coil wire disconnected and grounded) or remote control **US 4480/3** for 10 seconds (to energize the fuel pump)
- slightly lift air flow sensor until resistance is felt
  - minimum clearance: 1.0mm (0.039 in)
  - maximum clearance (up to venturi cone): 3.0mm (0.118 in)

If clearance **NOT OK**

- perform sensor plate free play adjusting with control plunger stop screw as follows:

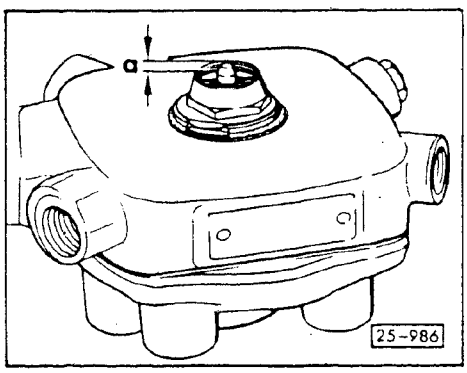

Sensor plate free play adjusting with control plunger stop screw

Varying measurement "**a**":
(distance "**a**" = approximately 0.6mm [0.024 in] between stop screw and collar of hex nut)

- turn stop screw clockwise: clearance gets larger
- turn stop screw counter-clockwise: clearance gets smaller
- 1/4 turn of stop screw: approximately 1.3mm (0.05 in) difference on sensor plate

- after adjusting free play, check idle speed,

cardiagn.com

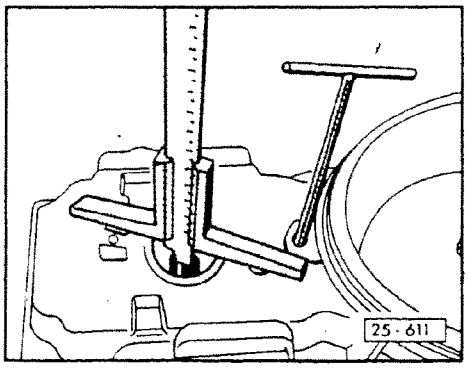

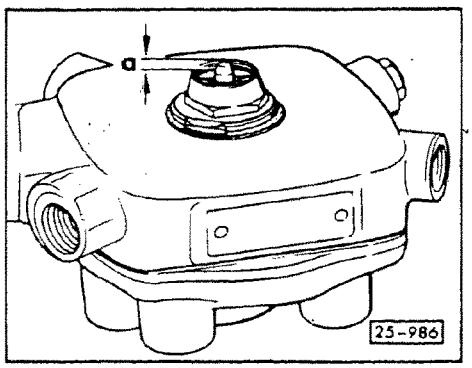

Sensor plate lever, basic adjustment

Note

Always perform basic adjustment of lever when replacing fuel distributor or air flow sensor plate.

- check distance between contact surfaces for fuel distributor on air flow sensor and roller for sensor plate lever, if necessary adjust via mixture adjustment screw
  - 18.8mm ± 0.1mm (0.73 ± 0.004 in)

Note

This value loses its validity after adjusting the CO-content (control current) to specification.

Control plunger, removing/installing

- note measurement "**a**" before removing stop screw
- remove stop screw and detach control plunger
- clean control plunger with gasoline before installing
- check sealing ring of stop screw for damage, replace if necessary (smaller diameter of sealing ring points to control plunger)
- turn stop screw back in to measurement "**a**"
- check and adjust rest position and clearance of sensor plate

CAUTION

Mechanical cleaning of control plunger is **NOT** permitted. If after cleaning with solvent, the control plunger is scored or sticking, the entire fuel distributor should be replaced.

cardiagn.com

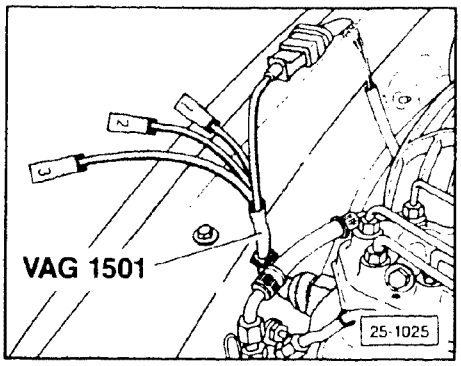

Airflow sensor potentiometer, checking/adjusting

Requirement
- idle stabilizer valve **OK**
- all possible vacuum leaks eliminated

- disconnect potentiometer harness connector and connect **VW 1501** test adaptor between potentiometer and harness connector
- switch multimeter **US 1119** to 20 volt range and connect to terminals **1** and **3** (U_1 voltage) of **VW 1501** adaptor
- switch **ON** ignition
  - must be 4.35 to 5.35 volts

If **NO**
- check wiring between Motronic control unit and potentiometer using wiring diagram, repair as necessary

If wiring **OK**
- replace Motronic control unit

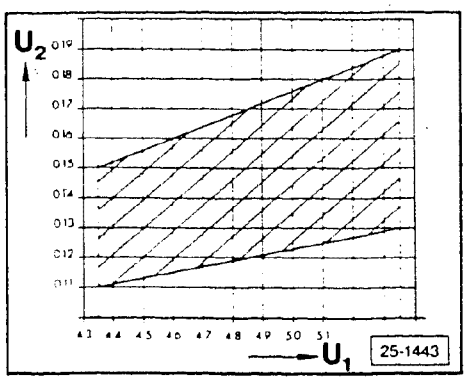

- switch multimeter **US 1119** to 2 volt range and connect to terminals **2** and **2** (U_2 voltage) of **VW 1501** adaptor
- switch **ON** ignition (but do **NOT** start engine)
  - U_2 voltage must fall within shaded area of graph

cardiagn.com

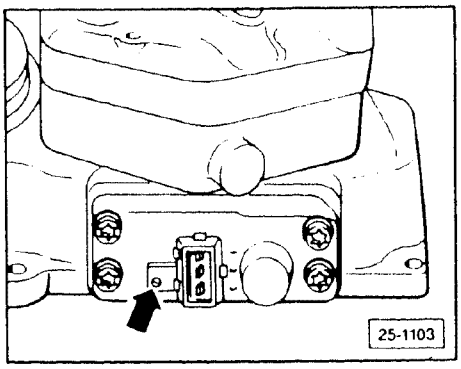

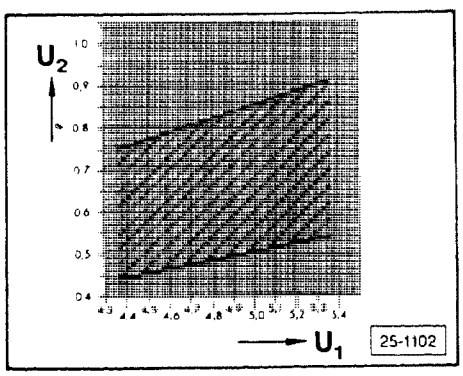

If **NO**

- remove sealing compound covering head of potentiometer trim screw

> **CAUTION**
>
> Do **NOT** damage the trim screw when scraping away the sealing compound.

- adjust U_2 voltage via trim screw (**arrow**), while observing multimeter, until required voltage is obtained
- start engine and observe U_2 voltage
  - must fall within shaded area of graph

If the U_2 voltage does **NOT** fall within the graph

- the U_2 reading is being influenced by another fault condition; possibly a vacuum leak that was overlooked
- potentiometer/airflow sensor plate assembly is faulty
- control unit or related wiring is faulty

If U_2 adjustment **NOT** possible

- replace airflow sensor plate/potentiometer assembly

cardiagn.com

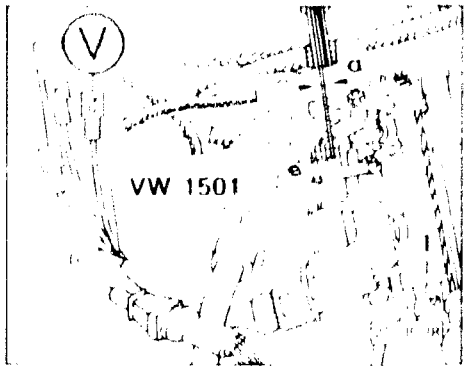

Idle and full throttle switches, checking

- connect test adaptor **VW1501** between the throttle switch and the throttle switch harness connector

Idle switch, checking and adjusting

- connect multimeter **US1119** to test connectors **1** and **2** (of test adaptor **VW1501**), set meter to DC voltage
- switch **ON** ignition
  - throttle closed: 0 volt
    throttle opened slightly: approximately battery voltage
- open throttle and close slowly; at the same time check the change over point of the idle switch using a feeler gauge between the switch roller and the throttle lever stop
  - change over point gap
    a 0.15 to 0.5mm (0.006 to 0.020 in) before idle stop

if **NO**

- adjust change-over point gap "**a**" by moving idle switch **1**
- switch **OFF** ignition

cardiagn.com

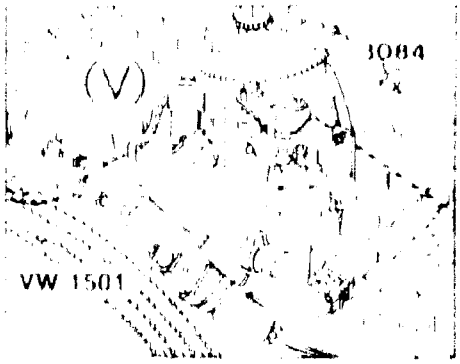

Full throttle switch, checking and adjusting

- Connect multimeter **US 1119** between test connectors 2 and 3 (of test adaptor **VW1501**)
- Switch **ON** ignition
  - throttle closed: approximately battery voltage
    throttle completely open: 0 volts
- Fasten pointer for protractor **3084** to adjuster for accelerator cable using a rubber band (**arrow**)
- Screw protractor **3084** onto throttle shaft (unscrew nut on throttle shaft if necessary)
- push throttle lever to full open (at stop limit) and zero the pointer and dial
- close throttle to approximately 20°, then slowly move toward full throttle position until full throttle switch engages (0 volts shown on meter)
  - 10° ± 2° before contacting full throttle limit stop

If **NO**

- adjust change-over point by moving full throttle switch **1**

Note

Roller on throttle lever must contact the diagonal of the lever from the full throttle switch

cardiagn.com

Throttle valve basic adjustment

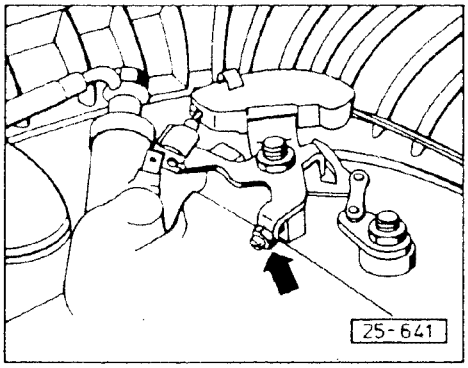

Note

The stop screw is set at the factory and should not be moved. If the screw position has been altered, check the basic adjustment as follows:

- loosen tensioning nut (**arrow**)
- turn throttle stop screw counter-clockwise until a gap occurs between stop and screw
- turn screw (**arrow**) in until it touches stop

Note

Determine the exact stop point of the limit screw by placing a thin piece of paper between the limit screw and stop. Tug on the paper while turning the screw, when you can just withdraw the paper:

- turn screw clockwise an additional 1/2 turn
- check throttle switch adjustment

cardiagn.com

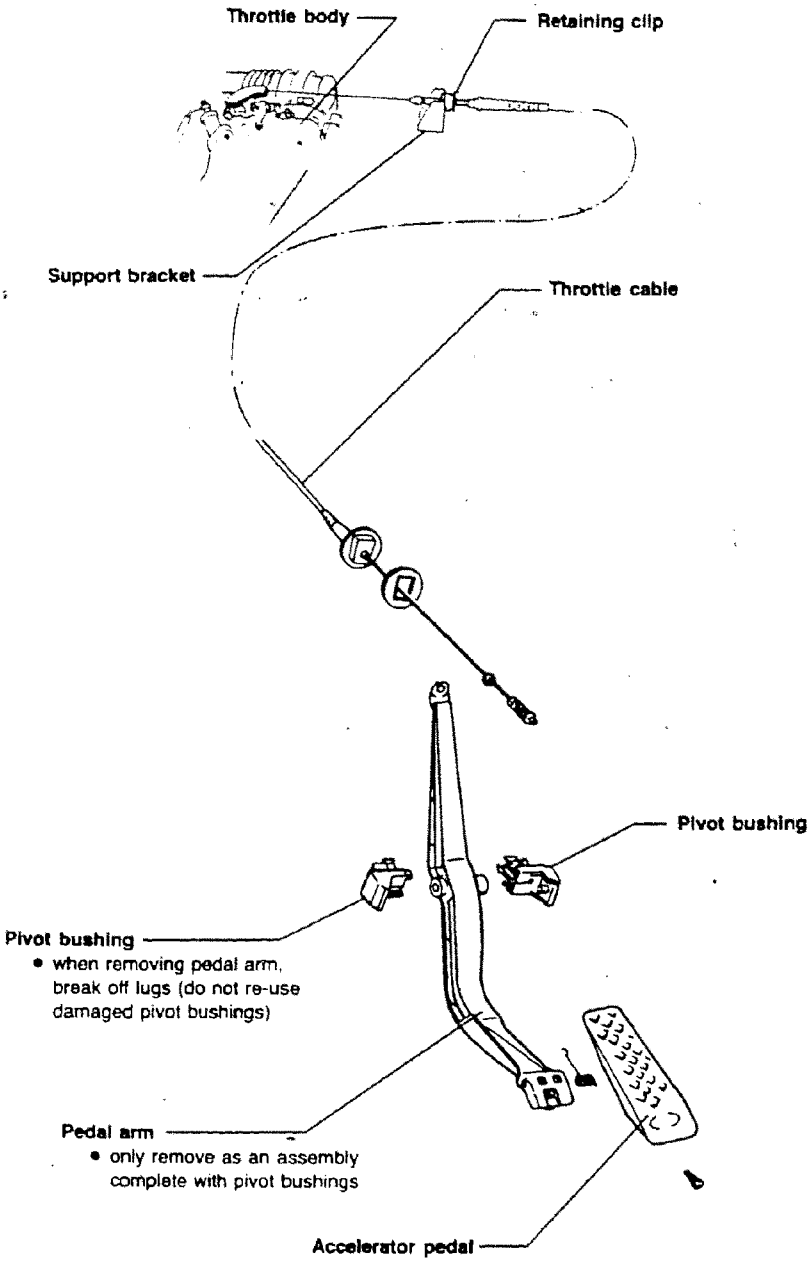

20-556

cardiagn.com

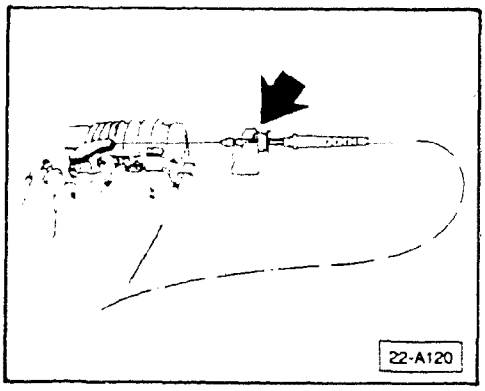

Throttle cable, adjusting

- Adjusting: with the accelerator pedal fully depressed; the throttle valve lever should **just reach** the full throttle position (maximum of 1mm (0.040 in) of play at the throttle lever)

If NO

- adjust cable by inserting the retaining clip (**arrow**) at the support bracket until the adjustment description is obtained
  - removing:
    - — disconnect cable at pedal arm support bracket and throttle valve lever
    - — break off lugs from inside the passenger compartment (do not re-use damaged cables) and take cable out through the engine compartment

cardiagn.com

Oxygen sensor control, checking

Check these first:

- engine oil 80°C (176°F) minimum
- idle adjustment **OK**
- exhaust system between catalytic converter and cylinder head must be tight and free of leakage
- voltage supply to oxygen sensor heater **OK**
- coolant temperature sensor **OK**, checking, section 25-80 test step **8**

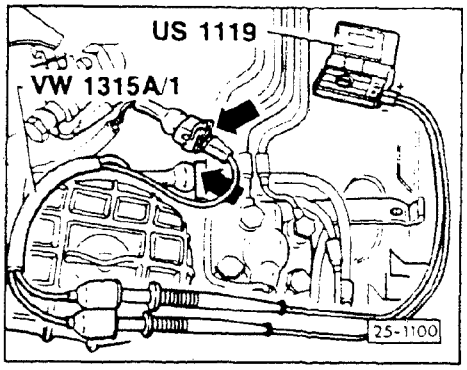

- activate "vehicle self diagnosis," see Repair Group D2
- connect multimeter **US 1119** and test adapter **1315A/1** to differential pressure regulator
- let engine idle for at least 2 minutes
- record control current

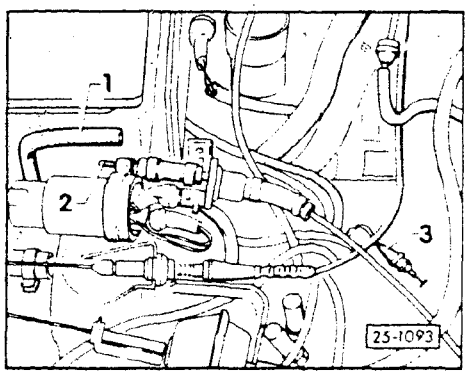

- remove hose **1** from connection piece **2**
  - control current must increase

If **NO**

- disconnect the oxygen sensor harness connector and hold wire **3** to ground for approximately 20 seconds
  - if the control current changes:
- replace the oxygen sensor

If control current does not change:

- perform electrical check, section 25-180-3

or

- replace control unit
- erase permanent fault memory, see Repair Group D2 for additonal information

cardiagn.com

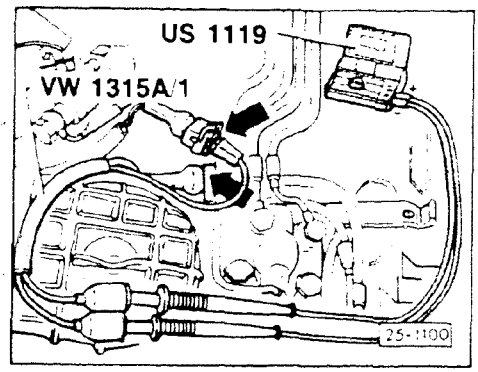

Starting enrichment, checking

Check these first:

- engine oil 70°C (158°F) minimum
- no faults stored in fault memory, see Repair Group D2 for additional information

- connect multimeter **US 1119** and adaptor **VW1315A/1** to differential pressure regulator
- remove harness connector from power output stage of ignition coil
- remove fuse **13**

- activate starter
  - control current must drop to 35 to 45 mA, and remain at this value for 3 seconds maximum, then change to approximately **0** mA

If **NO**

- perform electrical check, section 25-180-3

  or

- replace control unit

cardiagn.com

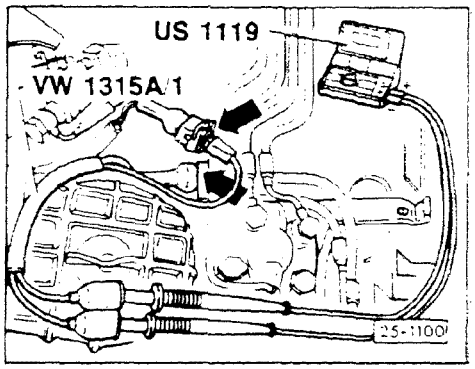

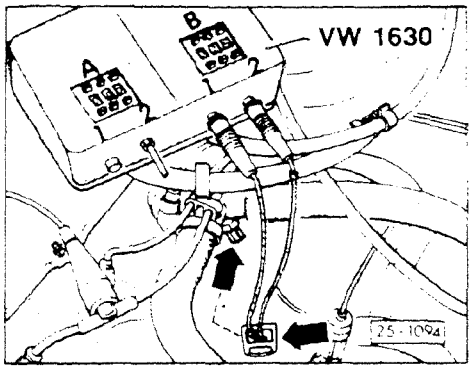

Engine restart, warmup and acceleration enrichment, checking

Check these first:

- engine oil 70°C (158°F) minimum
- no faults stored in fault memory, see Repair Group D2 for additional information

- connect multimeter **US 1119** and adaptor **VW1315A/1** to differential pressure regulator
- disconnect oxygen sensor harness connector
- disconnect coolant temperature sensor harness connector

- connect test leads from adjustable resistance box **VW 1630** to harness connector for coolant temperature sensor
- set resistance to 2500 ohms

- start engine
  - control current should reach 15 to 23 mA in approximately six to nine seconds, then slowly drop to 9 to 11 mA

- open throttle completely using short jerky motions, then reclose throttle
  - control current must increase briefly to 6 mA minimum

If **NO**

- perform electrical check, section 25-180-3

  or

- replace control unit
- erase permanent fault memory, see Repair Group D2

cardiagn.com

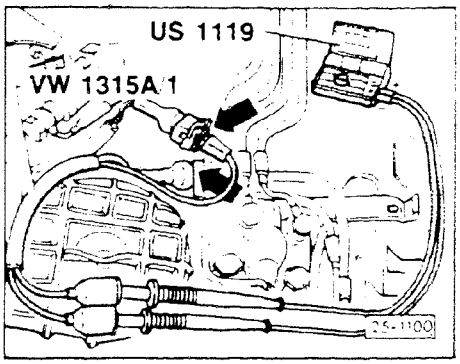

Deceleration fuel shut-off, checking

Check these first:

- engine oil 70°C (158°F) minimum
- no faults stored in fault memory, see Repair Group D2 for additional information

- connect multimeter **US 1119** and adaptor **VW1315A/1** to differential pressure regulator
- switch **ON** ignition
  - control current must indicate positive (+)

If **NO**
- reverse the test leads

- start engine and momentarily raise engine speed above 3000 RPM
- close throttle in jerky motions
  - control current must momentarily indicate negative (−)

If **NO**
- perform electrical check, section 25-180-3

or

- replace control unit

cardiagn.com

Cold start valve, checking

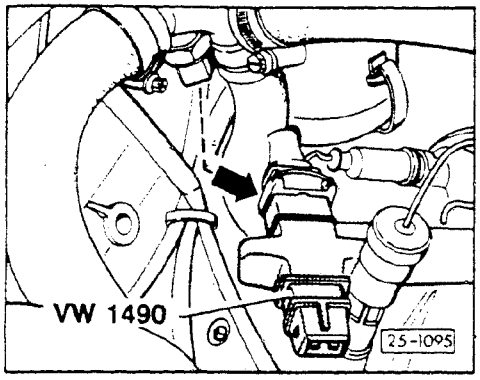

- remove harness connector from the power output stage of the ignition coil
- disconnect coolant temperature sensor harness connector
- insert 15 K ohm side of bridge adaptor **VW1490** into coolant temperature sensor harness connector (**arrow**)

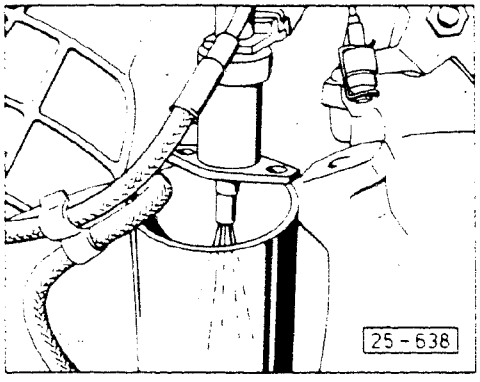

- remove cold start valve and place into a measuring beaker
- activate starter
  - cold start valve must spray in a uniform cone shape for 7 seconds
- carefully dry off the tip (jet) of the cold start valve
- after one minute the tip of the valve **MUST** still be dry

If the valve did **NOT** spray
- disconnect the cold start valve harness connector
- connect multimeter **US1119** to terminals of the cold start valve and measure the resistance
  - approximately 10 ohms

If **NO**
- replace cold start valve

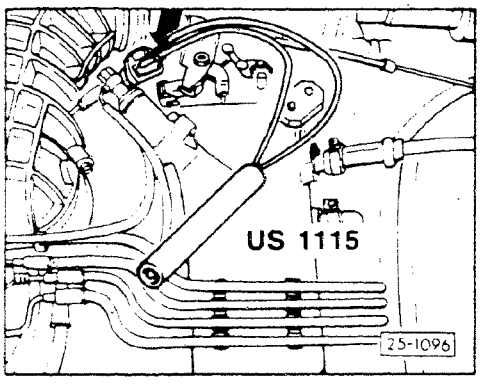

- connect LED tester **US1115** to the cold start valve harness connector
- activate starter
  - **US1115** must light up for approximately 7 seconds

If **NO**
- perform electrical check, section 25-180-3

or

- replace the control unit

cardiagn.com

Engine settings

Preparations for checking/adjusting

Always activate fault memory before checking engine settings, see Repair Group D2 for additional information

If **no** faults are stored

- check ignition timing, idle speed (not adjustable) and CO content sections 25-170-3 and -4 if adjustments are necessary begin here

Check these first:

- engine oil 80°C (176°F) minimum
- all electrical consumers switched **OFF**; radiator fan must **NOT** be running during checking and adjustment
- A/C switched **OFF**
- disconnect any pressure measuring devices
- if any injection lines were loosened or replaced, raise the engine speed above 3000 RPM several times and let idle for at least two minutes
- exhaust system must not leak
- oxygen sensor control **OK**

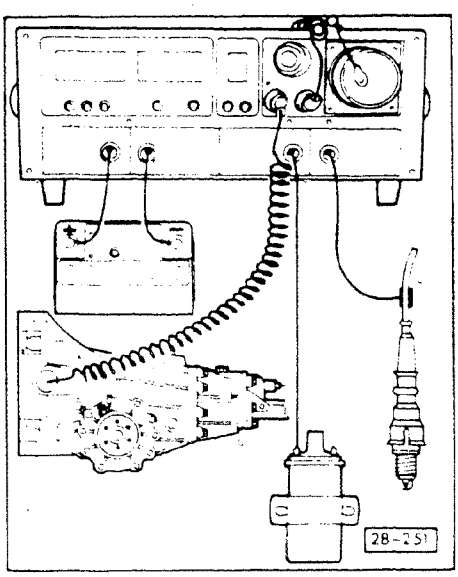

- switch **OFF** ignition
- connect engine tester **VW1367** for ignition timing and RPM display

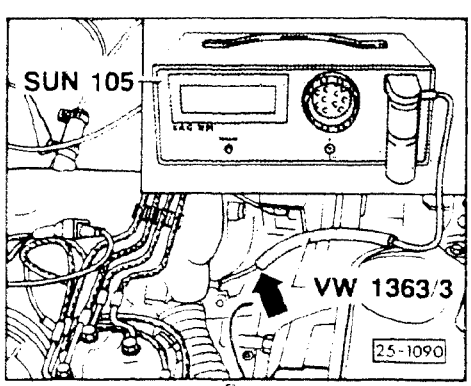

- connect CO tester **SUN 105** (or EPA equivalent) using adapter **VW1363/3** on CO measuring tube

Note

Hose must fit snugly on CO-measuring tube to minimize measurement errors.

cardiagn.com

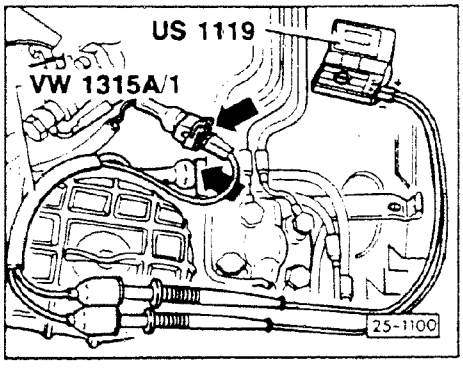

- connect multimeter **US1119** and test adapter **1315A/1** to differential pressure regulator
- switch **ON** ignition
  - control current must indicate positive (+)

If **NO**
- reverse the test probes

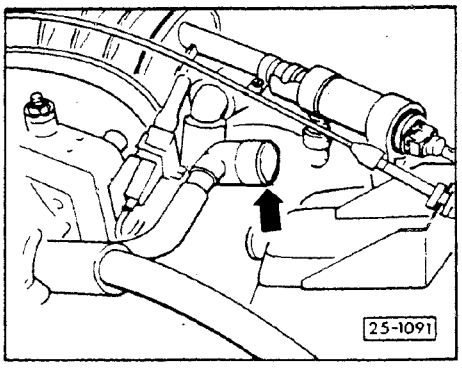

- remove crankcase housing breather hose from cylinder head cover and vent it to atmosphere
- remove crankcase housing breather hose from breather housing (cylinder block), and vent to atmosphere

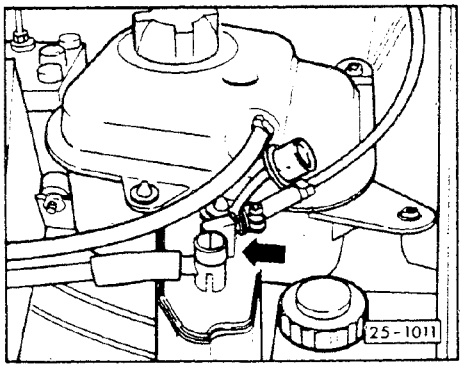

- remove sealing cap (**shaded**) from charcoal canister

cardiagn.com

CAUTION

Ignition timing, idle speed and CO are inter-related and **MUST** be checked and adjusted **TOGETHER**.

Ignition timing, checking and adjusting

- start engine and let idle
- check ignition timing, timing point will be displayed directly on engine tester **VW1367** or use strobe light method

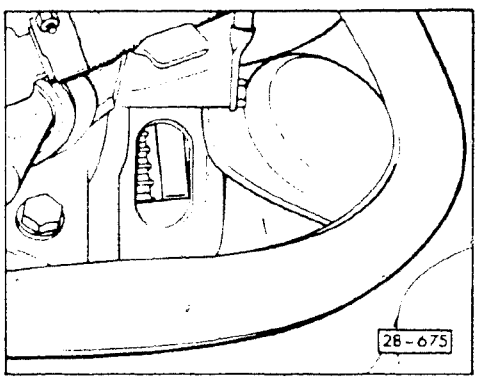

Ignition timing mark (on flywheel) for use with stroboscope method of checking

checking value: 4° to 8° Before TDC
adjusting value: 6° ± 1° Before TDC

- adjust if necessary

Note

To loosen the distributor, remove the tamper proof seal (cap) covering the distributor clamp bolt. When you have finished making adjustments and have re-torqued the bolt (18 ft lb), install a new seal.

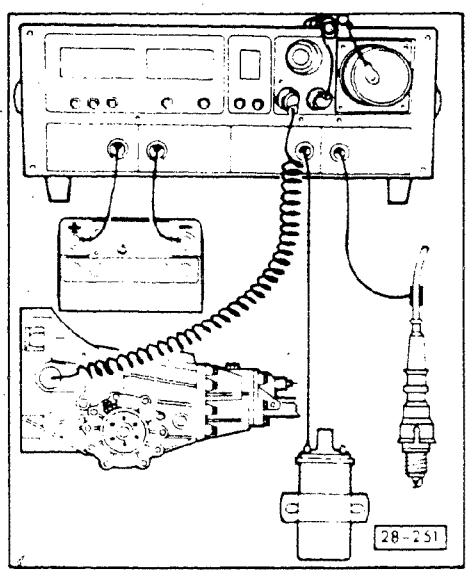

Idle speed checking, NOT adjustable

Read idle RPM directly on **VW1367**

- start engine and let idle
  - engine speed must be 780-900 RPM

If **NO**
- check intake air system for leaks
- check airflow sensor potentiometer, adjust if necessary

- start engine and let idle
  - engine speed must be 780-900 RPM
- switch **ON** A/C
  - idle speed must increase by approximately 70 RPM

If **NO**
- perform electrical check, section 25-180-2

cardiagn.com

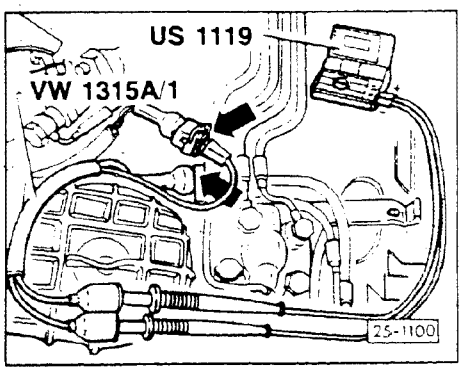

CO, checking and adjusting

(primary check)

- check the CO content by reading mA output on **US1119** multimeter
  - 0 to 5 mA (**must** fluctuate)

If **NO**, or does **NOT** fluctuate
- check the oxygen sensor control system, section 25-120

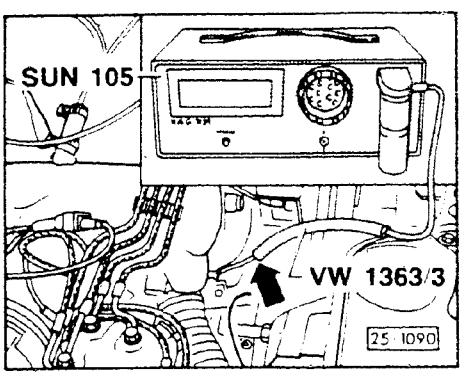

(secondary check)

- read CO content directly on **SUN 105** (or EPA equivalent)
  - 0.2 to 1.2% by volume

If flash codes **2343** or **2344** were stored or the CO content is outside of the tolerance range; adjust CO content as follows:

- switch **OFF** ignition
- remove rubber boot from mixture control unit

> **CAUTION**
>
> Do not press down on the adjustment wrench during adjustment, do not accelerate the engine with the adjustment tool in place. Remove the tool after each adjustment and briefly accelerate the engine before reading the CO value.

- **LIGHTLY** center punch mixture adjusting screw plug
- drill 2.5 mm (3/32 in) hole in center of plug approximately 3.5 to 4.0 mm (9/64 to 5/32 in) deep
- screw in 3 mm (1/8 in) sheet metal screw

- remove plug/screw, using pliers
- reinstall rubber boot
- start engine, repeat primary and secondary CO checks, adjust as follows

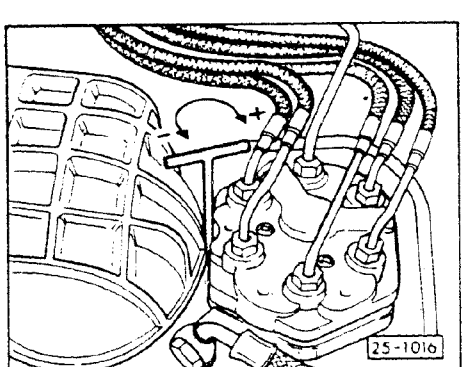

  - turning clockwise: CO increases
  - turning counterclockwise: CO decreases

- when primary and secondary CO adjustment specifications have been obtained, install new plug in CO adjustment hole

cardiagn.com

CIS-E Motronic electrical checks

Check these first:

- battery **OK**
- fuses **24** and **28**
- fuse 12 **OK** (California **ONLY**)

■ *Perform the following checks using multimeter* **US1119**.

> **CAUTION**
>
> Switch the multimeter to the appropriate range and units before connecting the test probes, to avoid possible damage to sensitive circuitry.

Note

The values given are valid for an ambient temperature range of 0° to +40°C (32° to 104°F)

- if the measured values deviate from the specified values, determine the errors using the appropriate wiring diagram
- before replacing suspected components check associated wires and connections

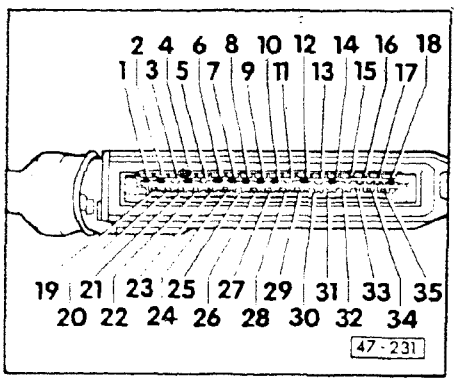

> **CAUTION**
>
> Disconnect the CIS-E Motronic control unit harness connector **ONLY** with the ignition switched **OFF**!
>
> Do **NOT** insert the multimeter probes into the harness connector terminals. Use jumper wires constructed from local supply using terminals that are identical to those used in the harness connector!

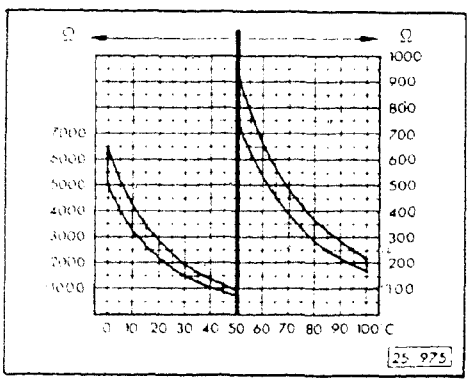

Temperature sensor diagram: test step **8**
Example 1: 2500 ohms @ 20°C (68°F)
Example 2: 200 ohms @ 100°C (212°F)

Note

Resistance varies depending on coolant temperature.

cardiagn.com

CIS-E Motronic electrical checks

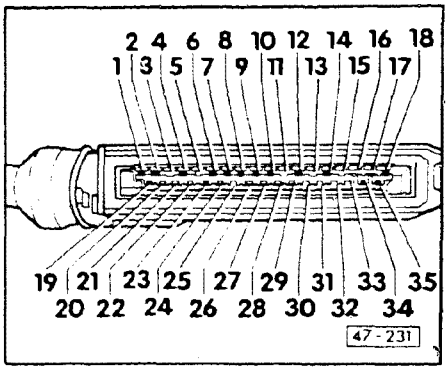

Terminal numbering for CIS-E Motronic control unit harness connector

Test range: voltage measurement			
Test step	**Connection terminal**	**• Test conditions – Additional work**	**Specified values**
1	14 + 35	• ignition **ON**	approximately battery voltage
2	17 + 35	• ignition **ON**	approximately battery voltage
3*	32 + 35	• ignition **ON** – A/C **ON**	approximately battery voltage
4*	33 + 35	• ignition **ON** – A/C **ON**	approximately 1 V below battery voltage
5	19 + 35	• ignition **ON**	approximately battery voltage
6	California version **ONLY** 13 + 35 connected 13 + 35 connected	• ignition **ON** • ignition **ON** – insert fuse in fuel pump relay	fault lamp must light up fault lamp must light up
Test range: resistance measurement			
7	4 + 5		15 to 25 ohms
8	3 + 35		see chart 25-975, section 25-180-1
9	31 + 35	• throttle closed • throttle completely open	open continuity
10	28 + 35	• throttle closed – throttle open	continuity open
11	49 state version **ONLY** 18 + 35		continuity
12	13 + 35 13 + 35	– insert fuse in fuel pump relay – ground test connector for vehicle self diagnosis	continuity continuity
13	14 + 16		approximately 10 ohms
14	14 + 15		30 to 60 ohms

cardiagn.com

CIS-E Motronic electrical checks

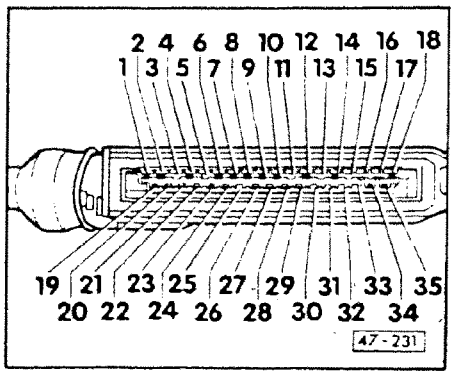

Terminal numbering for CIS-E Motronic control unit harness connector

Test range: resistance measurement			
Test step	**Connection terminal**	**• Test conditions – Additional work**	**Specified values**
15		– remove harness connector from Hall sensor (ignition distributor)	
	30 + 35	– connect terminal 1 + 2 to Hall sensor	continuity
	30 + 21	– connect terminal 2 + 3 to Hall sensor	continuity
16	11 + 35	– remove terminal from power output stage of coil and ground center contact	continuity
17	6 + 8	– separate knock sensor harness connector	open
		– connect terminals 1 + 2	continuity
		– connect terminals 1 + 3	continuity
18	7 + 35	– separate harness connection to oxygen sensor and connect wire to control unit to ground	continuity
19	23 + 26	• sensor plate in rest position	approximately 5k ohms
20	26 + 35		approximately 4k ohms
21	vehicles with standard transmission 34 + 35		continuity
	vehicles with auto transmission 34 + 35	• selector lever in P or N position – insert working points	open
22	12 + 35	– remove fuel pump relay (relay position 10) and ground terminal 47 of fuse/relay panel	continuity

cardiagn.com

Index

5-Cylinder w/CIS-E III

A/C compressor clutch
- ON/OFF signal, checking 25-400

Acceleration enrichment
- checking 25-320

Airflow sensor plate
- checking/adjusting 25-250

Altitude sensor
- voltage supply checking 25-430

Carbon canister shut-off solenoid
- output check 25-360

CIS-E III system
- component layout 25-190
- output checks, troubleshooting 25-340

Cold start valve power
- output check 25-380

Coolant temperature sender
- checking 25-420

Deceleration fuel shut-off
- checking 25-330

Differential pressure regulator
- control, output checking 25-350

Engine settings
- (1988) ignition timing, idle speed and CO content, checking/adjusting 25-440
- (from 1989) ignition timing, idle speed and CO content, checking/adjusting 25-450

Fuel pressure measurement
- checking 25-230
- technical data 25-220

Fuel injectors
- ★ viton tipped, checking/cleaning 25-235
- ★ metal tipped, checking/cleaning 25-236
- injection quantity, comparative measurement 25-240

Fuel pump relay
- control, checking 25-390

Idle and full throttle switches
- checking/adjusting 25-270

Idle stabilization system
- shift mode signal, checking 25-410

Idle stabilizer valve power
- output check 25-370

Injection quantity
- comparative measurement 25-240

Oxygen sensor
- checking 25-310

Potentiometer
- checking/adjusting 25-260

System precautions
- rules of cleanliness 25-200

Technical data
- chart 25-210

Throttle body dashpot
- adjusting 25-280

Throttle cable
- adjusting 25-110
- component layout 25-100

Throttle potentiometer (G 69)
- ★ checking/adjusting 25.265

Throttle valve
- basic adjustment 25-290

Coupe

Throttle cable
- adjusting 25-300
- component layout 25-300
- removing/replacing 25-300

★ NEW INFORMATION since last filming

cardiagn.com

WARNING

Fire hazard. Do not smoke or have anything in area that can ignite fuel.

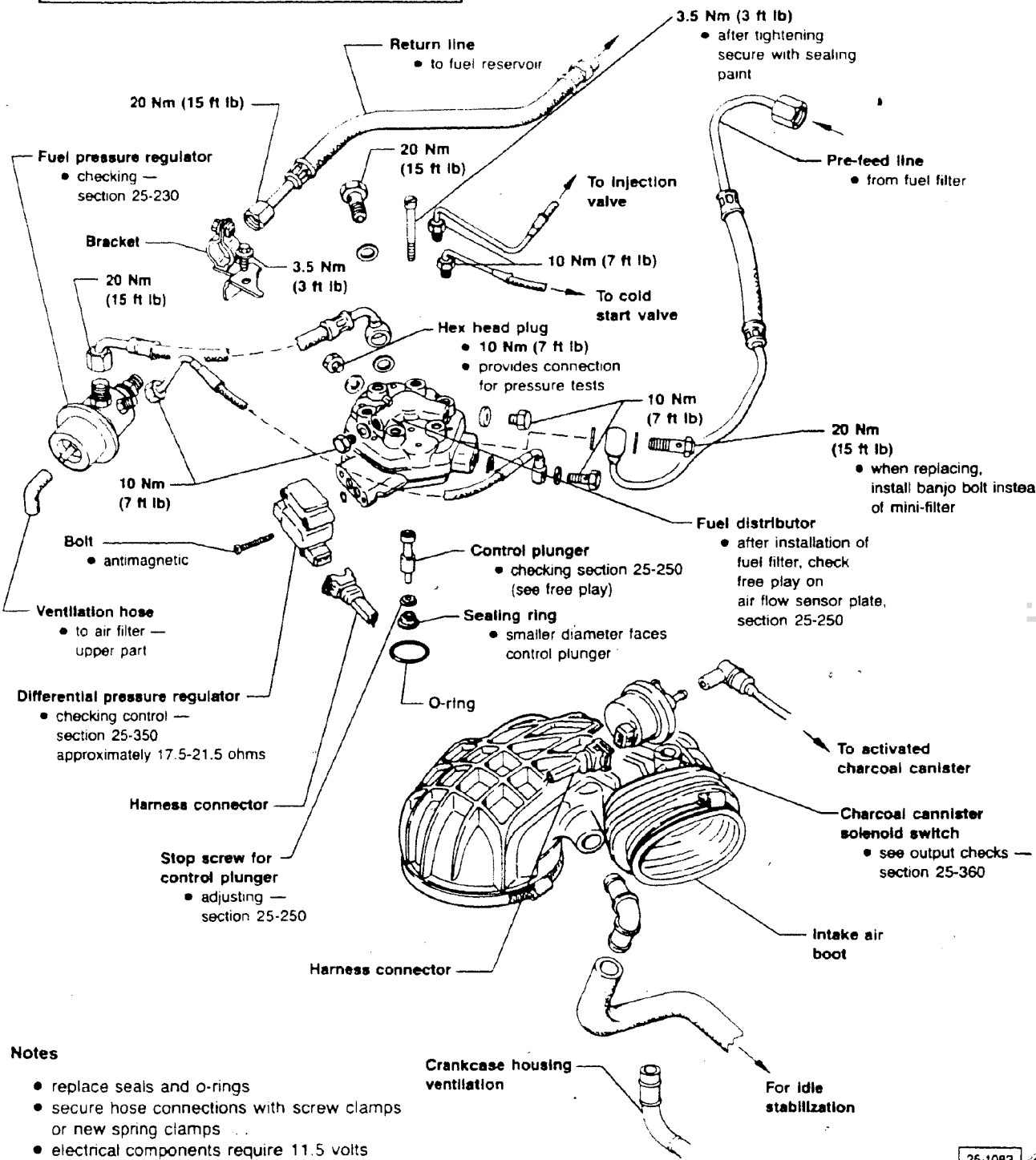

Notes

- replace seals and o-rings
- secure hose connections with screw clamps or new spring clamps
- electrical components require 11.5 volts minimum for proper operation

cardiagn.com

WARNING

Fire hazard. Do not smoke or have anything in area that can ignite fuel.

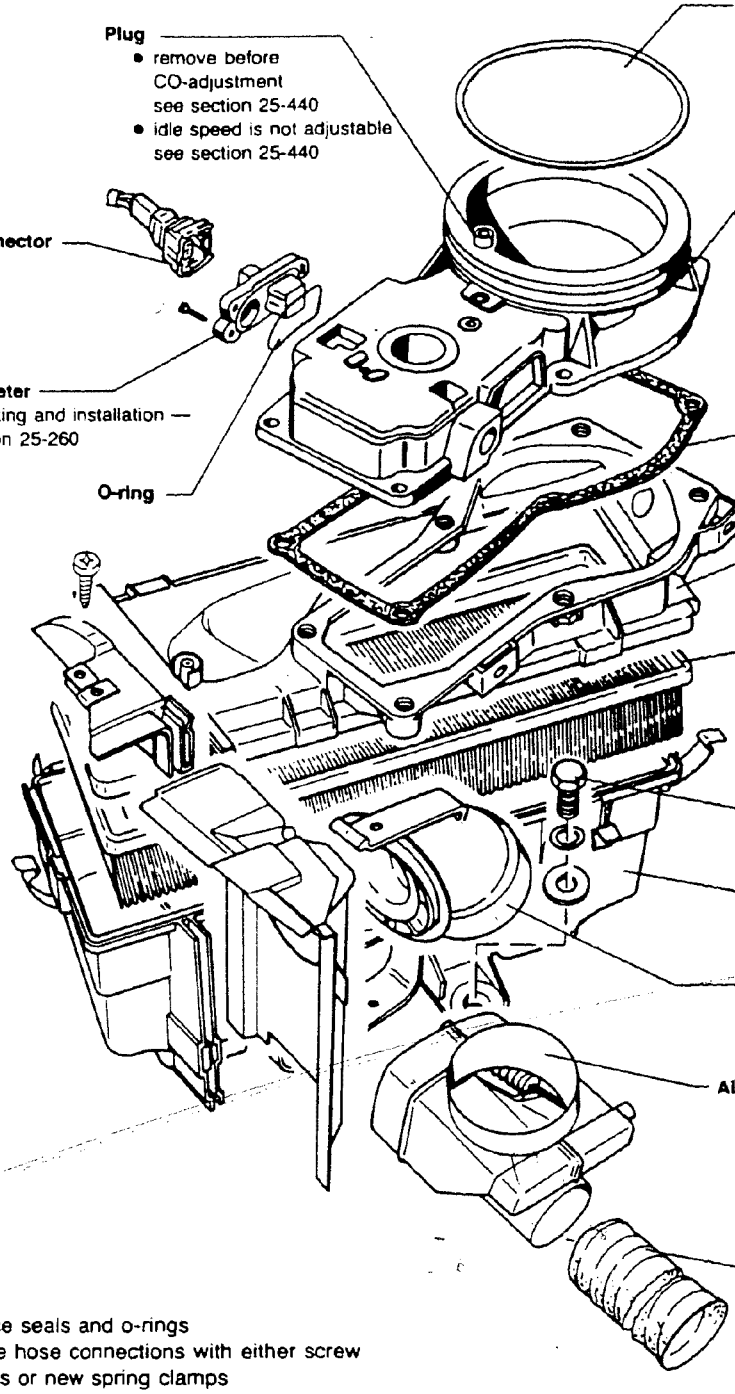

Notes

- replace seals and o-rings
- secure hose connections with either screw clamps or new spring clamps
- electrical components require 11.5 volts minimum for proper operation

cardiagn.com

Notes

- replace seals and o-rings during reassembly
- secure hose connections with either screw clamps or new spring clamps
- electrical components require 11.5 volts minimum for proper operation

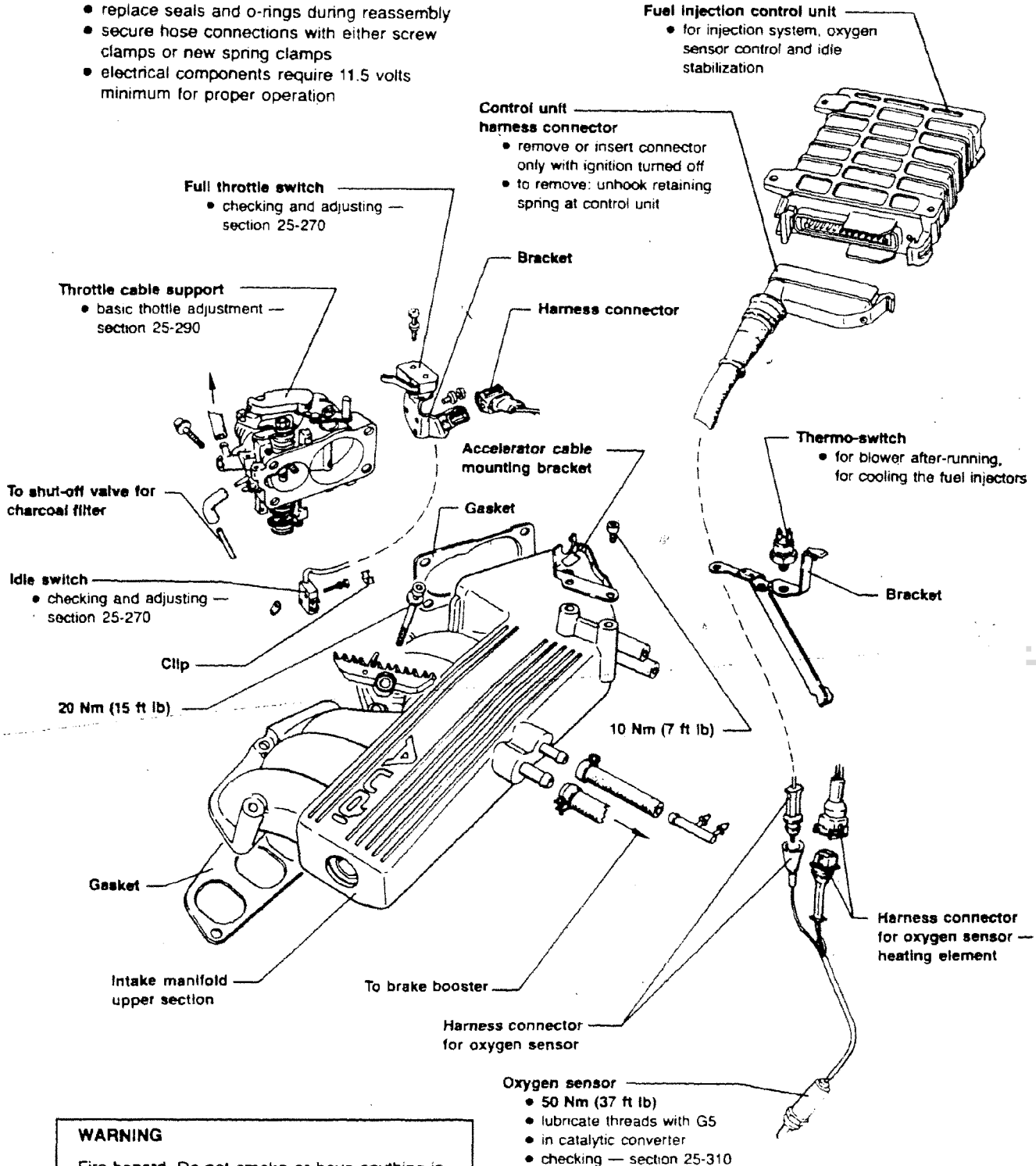

WARNING

Fire hazard. Do not smoke or have anything in area that can ignite fuel.

cardiagn.com

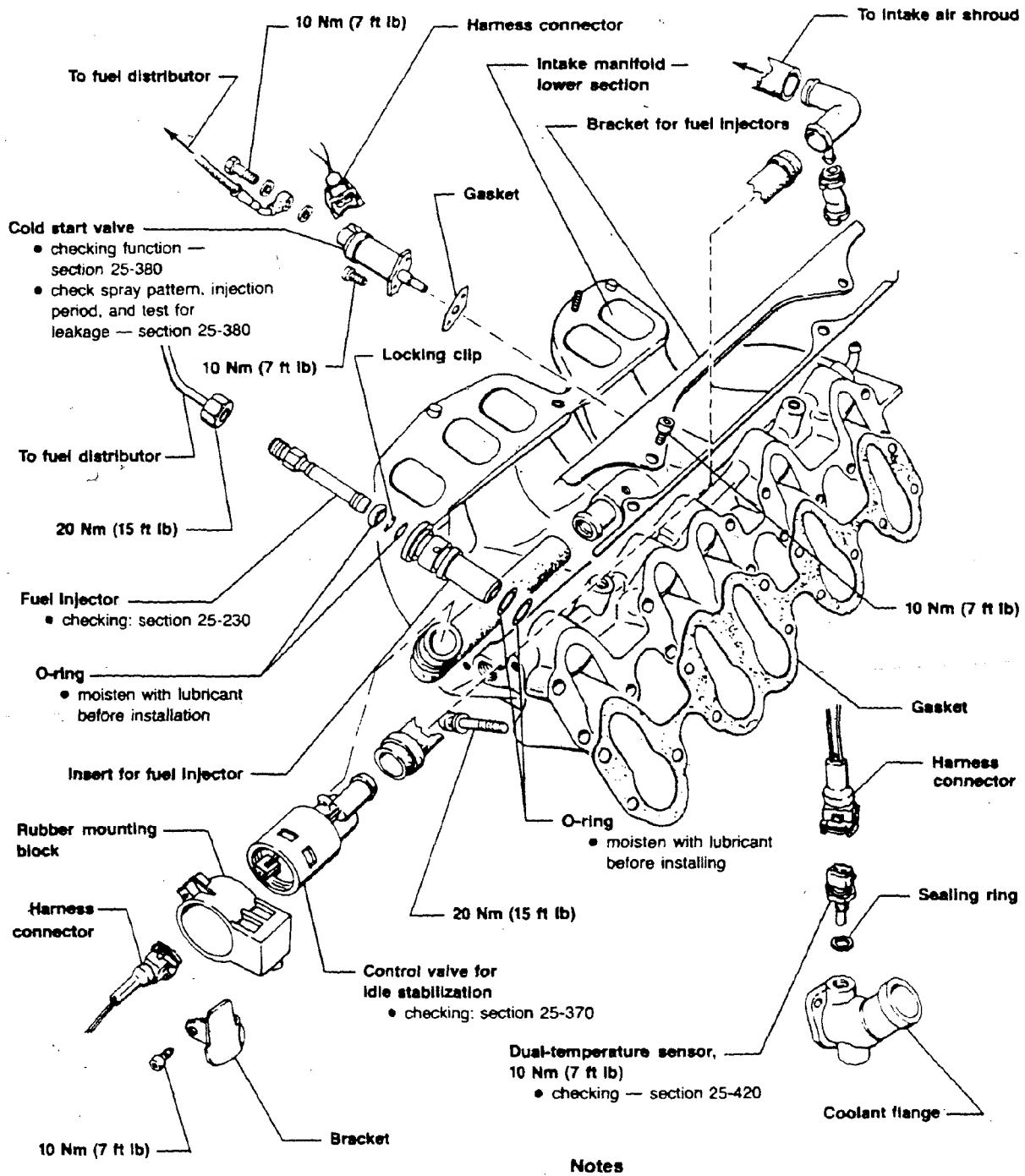

Notes

- replace seals and o-rings during reassembly
- secure hose connections with either screw clamps or new spring clamps
- electrical components require 11.5 volts minimum for proper operation

WARNING

Fire hazard. Do not smoke or have anything in area that can ignite fuel.

25-1040

cardiagn.com

System precautions

CAUTION

Be alert when you work on the engine. High voltage can injure you and damage components.

Turn ignition off:

- when connecting or disconnecting tester leads to ignition system
- when connecting or disconnecting ignition wires
- when washing the engine

Don't forget about the battery:

- do not disconnect battery when engine is running
- for emergency starting use fast charge for 15 seconds only and not more than 16.5 volts
- disconnect battery when using arc, spot, or electrical welding equipment

When testing the system:

- do not apply voltage to control unit to simulate output signals
- when coil wire (terminal 4) is disconnected from distributor, always ground using jumper wire
- with high tension wire disconnected do not crank engine (example: compression test)

When applying heat:

- if components are heated above 80°C (175°F) from paint dryer or steam cleaner, wait for components to cool before starting engine

Rules of cleanliness

CAUTION

First:

- clean connecting points before loosening

When fuel system is open

- do not use compressed air if you don't need it
- move vehicle only if you must
- if you cannot finish repairs, carefully cover parts with plastic or paper — not with rags

Use clean parts only

- do not unwrap new parts before needed
- only use new parts, not loose or unwrapped parts from tool box
- lay removed parts on clean surface. Cover with plastic or paper — not with rags

cardiagn.com

Technical data

Starting 1987 M.Y.		U.S.A.
Engine code		NG
Introduction date		8-87
Fuel injection control unit	49 states**	443 906 264 C
	California**	443 906 264 B
Ignition control unit	49 states**	443 907 397 C
	California**	443 907 397 E
Ignition distributor		034 905 205 H
RPM cutoff (upper limit) (VIA CIS-E III control unit)		6600 ± 100 RPM
Ignition timing	checking value	13-17° Before TDC
	adjusting value	15 ± 1° Before TDC
Timing mark location: ON flywheel		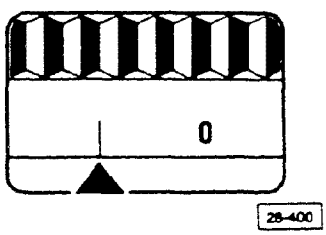
Firing order		1-2-4-5-3
Spark plugs	Bosch	W7DTC
	Electrode gap mm (in.)	0.8 ± 0.1 (0.031 ± 0.004)
	Tightening torque Nm (ft lb)	20Nm (15 ft lb)
Idle RPM*	manual transmission RPM	790 ± 70
	automatic transmission RPM	790 ± 70
CO-content (oxygen sensor probe disconnected)	checking value	0.3-3.0 vol. %
	adjusting value	0.6-1.0 vol. %

*Idle speed can **NOT** be adjusted using air screw on throttle body, idle is regulated by CIS-E III control unit
**Do NOT mix California and 49 state control units with one another.

CAUTION

Part numbers are for reference only. Always consult with the Parts Department for the latest information.

CAUTION

Idle speed, ignition timing and CO are interrelated and must be checked and adjusted together.

cardiagn.com

Fuel pressure measurement, technical data

Engine code	NG
System pressure with pressure gauge shut-off (in **closed** position) bar (psi)	6.1-6.5 (88.5-94)
Pressure differential I and II	
I (differential pressure regulator disconnected)	approximately 0.3-0.5 bar (4.3 to 7.3 psi) **less** than system pressure
II (differential pressure regulator connected with ignition turned **ON**)	approximately 1.2 to 1.5 bar (17.4 to 21.8 psi) **less** than system pressure
Shut-off pressure	
after 5 seconds maximum bar (psi)	3.7 (53.7)
Residual pressure	
after approximately 10 minutes minimum bar (psi)	3.5 (51)
after approximately 20 minutes minimum bar (psi)	3.4 (49)
Injection valves	
permissible difference between set of fuel injection valves:	
idle speed (first stop on tool VW 1348/1) • at 20 ml fuel quantity measured with **US 4480**	maximum 2.5 ml fuel
full throttle (last stop on tool VW 1348/1) • at 80 ml fuel quantity measured with **US 4480**	maximum 8.0 ml fuel
Opening pressure bar (psi)	4.3-4.6 (62-67)
Differential pressure regulator resistance	approximately: 17.5-21.5 ohms

cardiagn.com

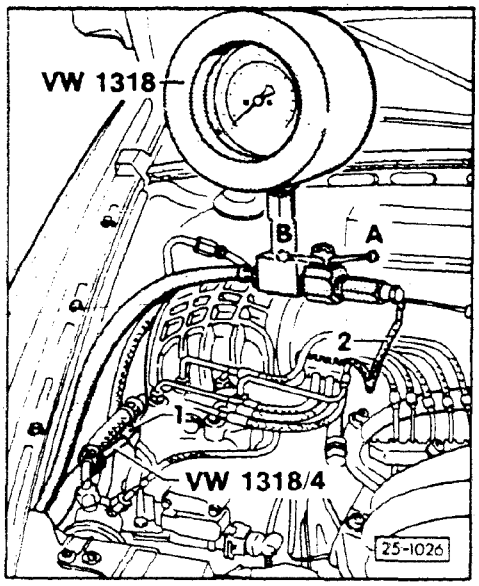

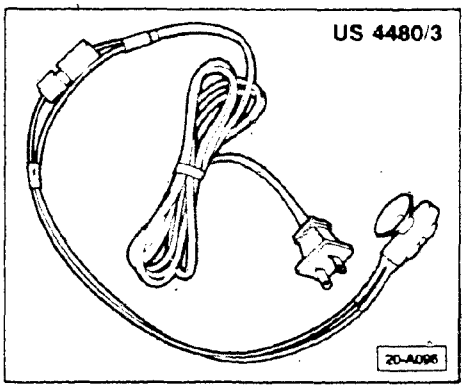

Fuel pressure, checking

Connecting VW 1318 pressure tester

Note

Use all new sealing rings. Observe the safety precautions, section 25-200.

- connect pressure tester **VW 1318** to measuring location **1** on fuel distributor using adaptor **VW 1318/4**
- connect bolt and line **2** from cold start valve to pressure tester
- turn pressure tester valve to closed position:
  A — open
  B — closed

System pressure, checking

- remove harness connector from differential pressure regulator
- remove fuel pump relay and jump socket with remote control **US 4480/3**
- open valve on **VW 1318** pressure tester
- switch **ON US 4480/3** remote control and read system pressure on gauge
  - 6.1 to 6.5 bar (88.5 to 94.3 psi)

Note

System pressure is **NOT** adjustable.

Differential pressure Part I, checking

- close valve on **VW 1318** pressure gauge

Note

Harness connector to differential pressure gauge remains disconnected.

- switch **ON US 4480/3** remote control
- read differential pressure on gauge
  - 0.3 to 0.5 bar (4.3 to 7.3 psi) **less** than system pressure

cardiagn.com

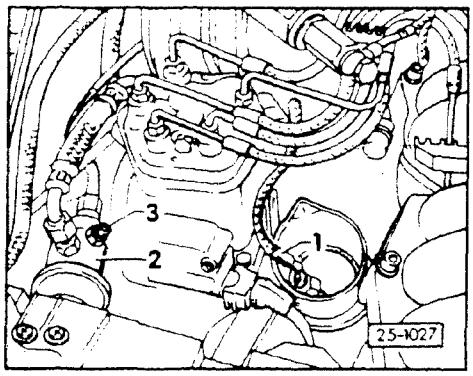

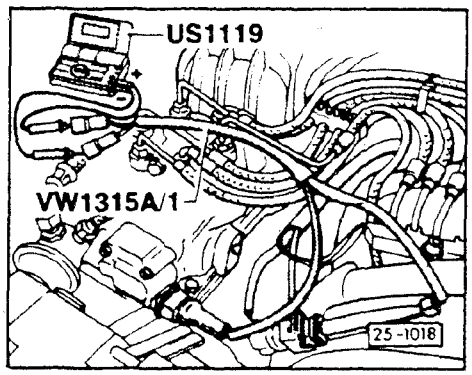

If differential pressure specification not obtained:

- disconnect small diameter fuel line (**1**) from fuel pressure regulator (**2**) and place open end in a beaker
- plug opening (**3**) on fuel pressure regulator
- switch **ON US 4480/3** remote control for one minute and measure amount of fuel
  - 130 to 150 cc

If **NO**

- replace differential pressure regulator
- reconnect fuel line to fuel pressure regulator

Differential pressure Part II, checking

- close valve on **VW 1318** pressure gauge
- switch **ON US 4480/3** remote control
- connect **US 1119** multimeter to differential pressure regulator using adaptor **VW 1315 A/1**
- switch meter to 200 mA **DC** scale

- switch **ON** ignition
- read regulator current and differential pressure
  - 100 mA
  - differential pressure should be 1.2 to 1.5 bar (17.4 to 21.8 psi) less than system pressure

Note

The fuel injection control unit will generate a fixed current of 100 mA to the differential pressure regulator whenever the ignition is switched **ON** and the engine is stationary.

cardiagn.com

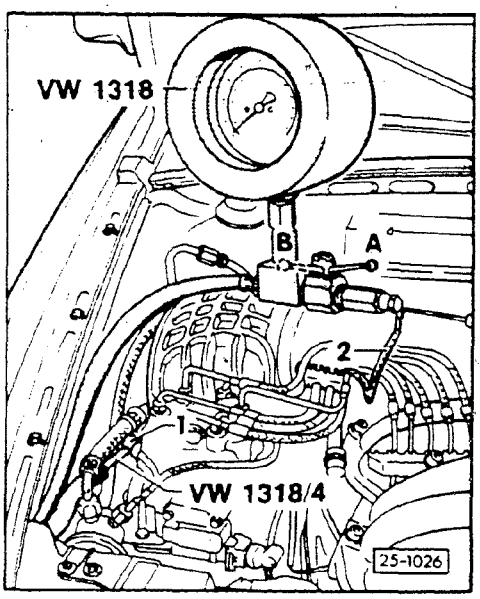

Residual pressure, checking

Note

This procedure is required only for hot start problems.

- switch **ON US 4480/3** remote control for approximately five seconds
- observe pressure drop on **VW 1318**, minimum pressure should be
  - 3.5 bar (51 psi) after 10 minutes
  - 3.4 bar (49 psi) after 20 minutes

If the pressure drop is greater
- check fuel pump check valve (see group 20)
- check air flow sensor plate free play section 25-250-3
- check sealing rings in fuel distributor, replace if necessary

If these checks don't reveal problem
- replace fuel pressure regulator

Fuel injectors and injector lines

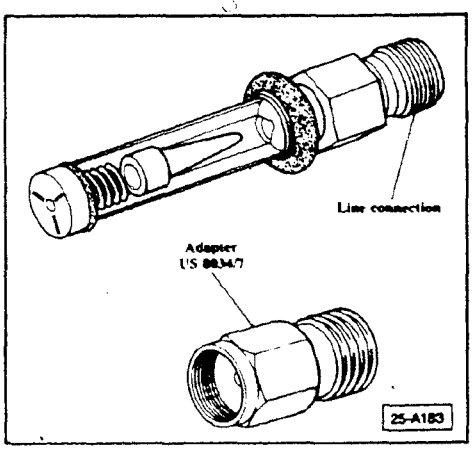

Note

The opening pressure for CIS-E III fuel injectors is higher than CIS-E injectors to allow a higher residual pressure.
- specification: 4.3-4.6 bar (62-67 psi)

Note

The CIS-E III fuel injectors use a finer thread for the fuel line connection than CIS-E injectors. You will need special adaptor **US 8034/7** to use pressure test stand **US 8034**.

cardiagn.com

Viton tipped fuel injectors, checking/cleaning

Identifying

- check Part Number stamped on barrel of injector

Note

Two types of fuel injectors are used in these vehicles: Viton tipped, and metal tipped (non-viton). Viton tipped injectors will have one of the following Bosch Part Numbers stamped on the body of the injector:

0-437-502-043 High pressure concept, fine thread (replacement)
(Audi Replacement, Part Number: **035 133 551F**)

0-437-502-044 High pressure concept, fine thread (OEM)
(Audi Replacement, Part Number: **035 133 551F**)

0-437-502-045 Low pressure, coarse thread (replacement)
(Audi Replacement, Part Number: **026 133 551**)

0-437-502-046 Low pressure, coarse thread (OEM)
(Audi Replacement, Part Number: **026 133 551**)

If one of the above Part Numbers is **NOT** found,

- see section 25-236 "**Metal Tipped Injectors**, Cleaning and Checking"

> **CAUTION**
>
> Part Numbers are for reference only. Always consult with the Parts Department for the latest information.

Notes regarding Viton tipped injectors:

- they are available in high and low pressure versions, fine and coarse threads
- they can be used as a replacement for metal tipped injectors but only in complete sets
- the fuel absorption characteristics of Viton require different testing considerations than metal tipped injectors

cardiagn.com

- spray pattern and chatter tests should not be performed on these injectors because the results cannot be used to determine acceptability

Cleaning/checking

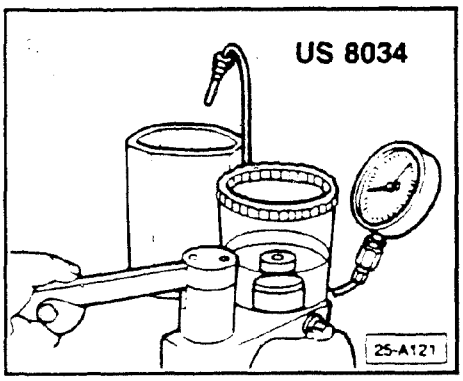

Note

Poor injector performance can often be corrected by flushing and testing the injector using the **US 8034** injector tester.

> **CAUTION**
>
> Perform the following checks in sequence.

Corrosion checking

- visually inspect tip of injector for rust

If **YES**

- replace injector

If **NO**

- proceed with following procedures

> **WARNING**
>
> Fluid used in tester (Shell mineral spirits 135) is flammable. Do not smoke or have anything in area that can ignite fuel.

Contamination and varnish, checking

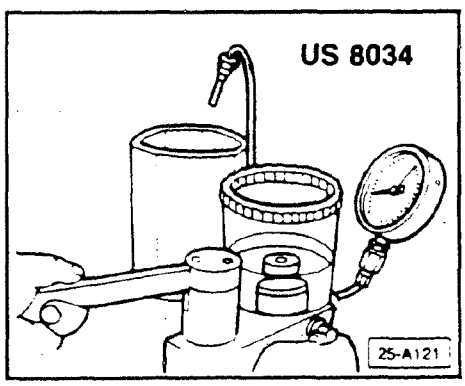

- open **US 8034** pressure valve fully by turning counterclockwise
- loosely connect injector to tester via union nut
- bleed air from pressure line by operating lever several times, allowing tester fluid to escape through nut
  - use a suitable container under injector to catch overspray
- tighten union nut
- slowly operate hand lever
  - approx. 2 strokes per second

cardiagn.com

- if pressure does not build up, injector has leakage (e.g. foreign object(s) lodged between seat). If this is the case, proceed to bleeding of injector and repeat contamination test
- if after bleeding, pressure is restored; return to this point and continue with sequence
- observe pressure on gauge
  - depending on Part Number of injector, minimum opening pressure must be:

0-437-502-043 3.2 bar
(Audi Replacement, Part Number: **035 133 551F**)

0-437-502-044 3.2 bar
(Audi Replacement, Part Number: **035 133 551F**)

0-437-502-045 2.5 bar
(Audi Replacement, Part Number: **026 133 551**)

0-437-502-046 2.5 bar
(Audi Replacement, Part Number: **026 133 551**)

If **NO**
- injector may be contaminated or varnished

- close valve on **US 8034**
- flush injector by operating tester with 20 to 30 vigorous strokes
- open valve on **US 8034**
- recheck opening pressure

If still below specification,

- replace injector

If **OK**

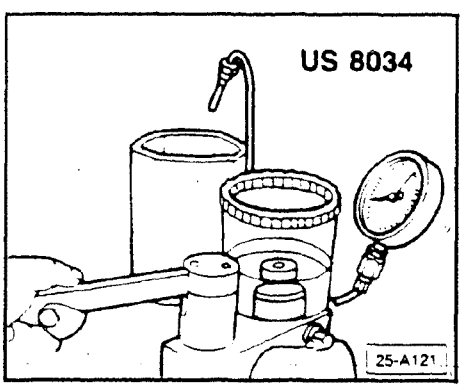

- close valve on **US 8034**
- **bleed** injector by rapidly operating tester 20 to 30 strokes
  - injector is bled when sound of escaping fluid stabilizes

Opening pressure, checking

- open valve on **US 8034**
- slowly operate hand lever
  - approx. 2 strokes per second

- observe pressure on gauge

cardiagn.com

Note

Opening pressure for a Viton tipped injector will vary depending upon how long the Viton has been out of contact with gasoline.

- use following chart (based on length of time injector has been removed from the fuel system) to determine acceptable opening pressures

Bosch part number:	If less than 3 hours	From 3 to 24 hours	Greater than 24 hours
0-437-502-043 (Audi Replacement, Part Number: **035 133 551F**)	3.9 bar	3.8 bar	3.6 bar
0-437-502-044 (Audi Replacement, Part Number: **035 133 551F**)	3.9 bar	3.8 bar	3.6 bar
0-437-502-045 (Audi Replacement, Part Number: **026 133 551**)	3.0 bar	2.9 bar	2.7 bar
0-437-502-046 (Audi Replacement, Part Number: **026 133 551**)	3.0 bar	2.9 bar	2.7 bar

Leak checking

Requirement

- hand valve on **US 8034** must be open

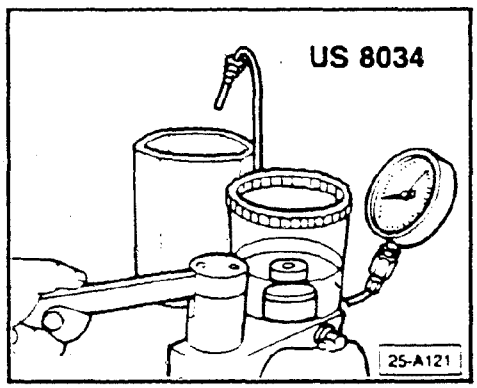

- using the previously established opening pressure as a reference; slowly increase the pressure to **0.3** bar below that value
  - a droplet may form at the tip of the injector within 120 seconds, however; if the droplet falls off the injector must be replaced

CAUTION

Always flush new injectors before installing, using the **US 8034** Tester, to remove any foreign material that might have entered the injector during the shipping or handling.

cardiagn.com

Metal tipped fuel injectors, checking/cleaning

Identifying

- check Part Number stamped on barrel of injector

Note

Two types of fuel injectors are used in these vehicles; Viton tipped, and metal tipped (non-Viton). Viton tipped injectors will have one of the following Bosch Part Numbers stamped on the body of the injector.

0-437-502-043 High pressure concept, fine thread (replacement)
(Audi Replacement, Part Number: **035 133 551F**)

0-437-502-044 High pressure concept, fine thread (OEM)
(Audi Replacement, Part Number: **035 133 551F**)

0-437-502-045 Low pressure, coarse thread (replacement)
(Audi Replacement, Part Number: **026 133 551**)

0-437-502-046 Low pressure, coarse thread (OEM)
(Audi Replacement, Part Number: **026 133 551**)

If one of the above Part Numbers is **NOT** found,

- see section 25-235 "**Viton Tipped Injectors**, Cleaning and Checking"

> **CAUTION**
>
> Part Numbers are for reference only. Always consult with the Parts Department for the latest information.

Any other Part Number indicates that it is metal tipped.

Notes regarding metal tipped injectors:

- Metal tipped injectors are no longer available as spare parts, replacements will be Viton tipped
- if one or more metal tipped injectors has to be replaced the entire set must be replaced
- Viton and metal tipped injectors must not be used together

cardiagn.com

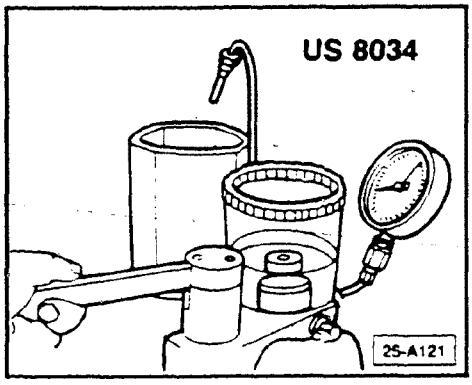

Cleaning/checking

Note

Poor injector performance can often be corrected by flushing and testing the injector using the **US 8034** injector tester.

> **CAUTION**
>
> Perform the following checks in sequence.

Corrosion checking

- visually inspect tip of injector for rust

If **YES**

- replace injector

If **NO**

- proceed with following procedures

> **WARNING**
>
> Fluid used in tester (Shell mineral spirits 135) is flammable. Do not smoke or have anything in area that can ignite fuel.

Contamination and varnish, checking

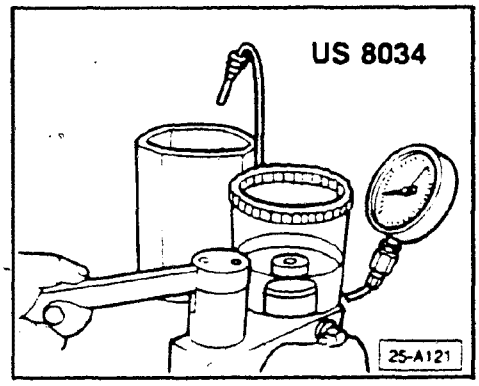

- open **US 8034** pressure valve fully by turning counterclockwise
- loosely connect injector to tester via union nut
- bleed air from pressure line by operating lever several times, allowing tester fluid to escape through nut
  - use a suitable container under injector to catch overspray
- tighten union nut
- slowly operate hand lever
  - approx. 2 strokes per second
- if pressure does not build up, injector has leakage (e.g. foreign object(s) lodged between seat). If this is the case, proceed to bleeding of injector and repeat contamination tester
- If after bleeding, pressure is restored; return to this point and continue with sequence
- observe pressure on gauge
  - minimum opening pressure must be 1.5 to 2.0 bar

cardiagn.com

If **NO**

- injector may be contaminated or varnished

- close valve on **US 8034**
- flush injector operating tester with 20 to 30 vigorous strokes
- repeat contamination check

If still below specification,

- replace injector

If **OK**

- bleed injector by rapidly operating tester 20 to 30 strokes
  - injector is bled when sound of escaping fluid stabilizes

Opening pressure, checking

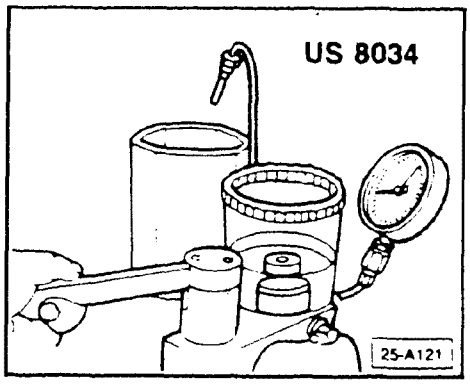

- open valve on **US 8034**
- slowly operate hand lever
  - approx. 2 strokes per second

- observe pressure on gauge
  - opening pressure must be 3.0 to 4.1 bar (low pressure), 4.3 to 4.6 bar (high pressure concept)

Leak checking

Requirement

- hand valve on **US 8034** must be open

- using the previously established opening pressure as a reference; slowly increase the pressure to 0.5 bar below that value

For example: If opening pressure was 4.0 bar; the leak checking pressure must be 3.5 bar.

- a droplet may form at the tip of the injector within 15 seconds, however; if the droplet falls off the injector must be replaced

cardiagn.com

Chatter, spray pattern test

- close hand valve fully by turning clockwise
- flush injector by operating lever several times
  - approx. 2 strokes per second
- reduce the rate to 1 stroke per second
  - injector must chatter
- observe spray pattern
  - must be conical and well atomized, a one sided spray pattern within a spray angle of 35° is acceptable

If droplets form at the injector tip,

- replace entire set of injectors with Viton tipped

If spray pattern is straight (not conical),

- replace entire set of injectors with Viton tipped

If spray is solid (not atomized),

- replace entire set of injectors with Viton tipped

> **CAUTION**
>
> Always flush new injectors before installing, using the **US 8034** Tester, to remove any foreign material that might have entered the injector during shipping or handling.

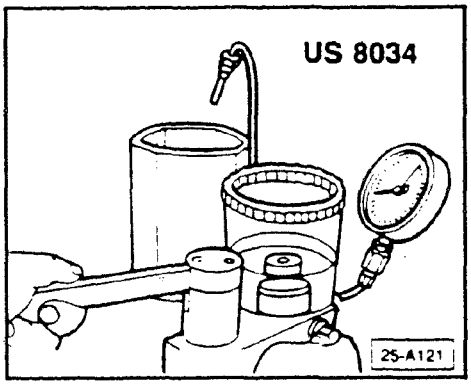

cardiagn.com

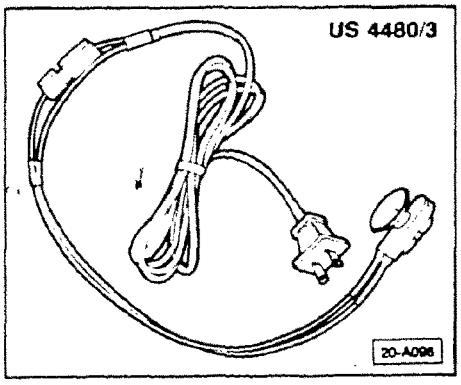

Injection quantity, comparative measurement

Check this first:

- fuse No. 13 **OK**

- remove fuel pump relay from fuse relay panel (position No. 10)
- connect **US 4480/3** remote control

- remove intake manifold (upper section) see section 25-190-4 (for exploded view)
- remove injector bracket

WARNING

Fire hazard. Do not smoke or have anything in area that can ignite fuel

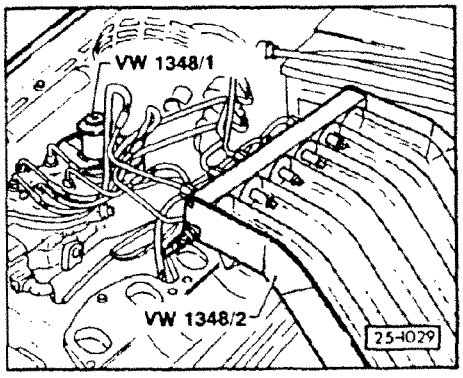

- remove fuel injectors from seats and insert into openings of fuel analyzer **VW 1348/2B**

Note

Carefully route the fuel lines to avoid pinching and bending.

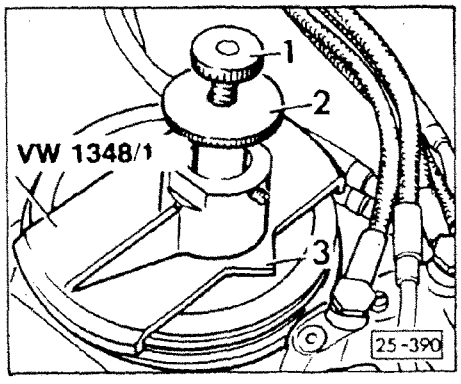

- turn and lift adjusting screw **1** and slide **2** into upper (full throttle) position on **VW 1348/1**
- place **VW 1348/1** centrally on edge of airflow sensor assembly
  - pointer **3** faces to center of fuel distributor

- push adjusting slide **2** down onto stop
- turn setting screw **1** clockwise until magnetic end contacts airflow sensor plate retaining bolt
- switch **ON US 4480/3** remote control
- turn adjusting screw **1** counterclockwise until beginning of fuel injection is seen at one injector
- switch **OFF US 4480/3** remote control and empty **US 4480** analyzer into vehicle fuel tank

cardiagn.com

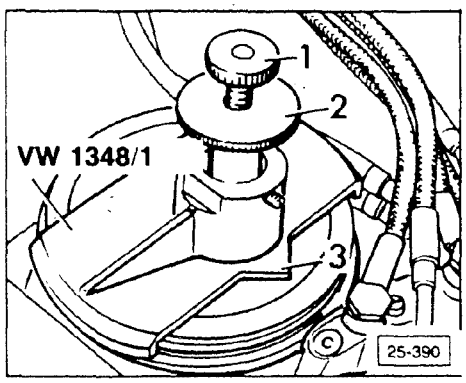

Idle speed fuel injection quantity, measuring

- lift adjusting slide **2** to first stop (simulated idle)
- switch **ON US 4480/3** remote control until fuel level on scale of **one** measuring glass reaches **20 ml fuel**
- note injector spray pattern
  - must be even and cone shaped
  - all injectors should have same spray pattern
- if not, briefly lift sensor plate up once, fully, and repeat test
- compare amount of fuel for all injectors (keep measuring device vertical)
- permissible difference between fuel quantity in all flasks must be not more than:
  - **maximum 3.0 ml fuel**
  - if fuel in flasks differs between high and low more than 3.0 ml, interchange both injectors and repeat test
  - if difference of injected fuel did not change with interchanged injectors, check if fuel line is pinched or fuel distributor is defective
  - if difference of injected fuel has changed with interchanged injectors, replace injectors

cardiagn.com

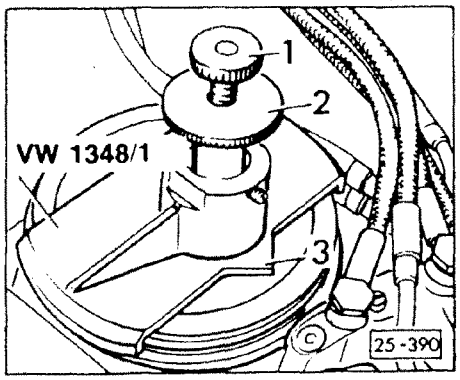

Full throttle fuel injection quantity, measuring

- empty measuring device **US 4480**. Reinstall injectors in measuring device
- lift adjusting slide **2** to last stop (simulated full throttle)
- switch **ON US 4480/3** remote control until fuel level on scale of one measuring glass reaches **80 ml fuel**
- note injector spray pattern
  - must be even and cone shaped
  - all injectors should have same spray pattern

If **NO**

- briefly lift sensor plate up once, fully and repeat test
- compare amount of fuel for all injectors (keep measuring device vertical)
- permissible difference between fuel quantity in all flasks must be not more than **8.0 ml fuel**
  - if fuel in flasks differs between high and low more than 8.0 ml, interchange both injectors and repeat test
  - if difference of injected fuel did not change with interchanged injectors, check if fuel line is pinched or fuel distributor is defective
  - if difference of injected fuel has changed with interchanged injectors, replace injectors

Immediately after measuring, test injectors for leaks:

- set sensor plate in rest position
- switch **ON US 4480/3** remote control for about **2** minutes
  - injectors must not drip

cardiagn.com

CONTINUED IN THE

BEGINNING OF NEXT ROW

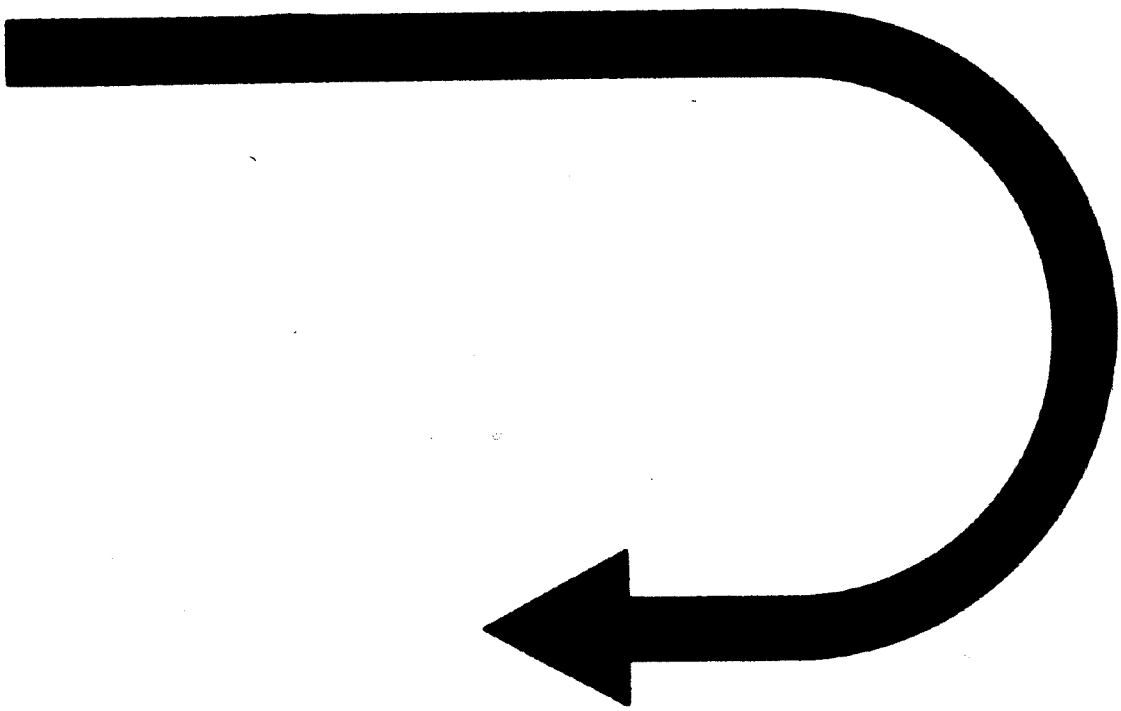

cardiagn.com

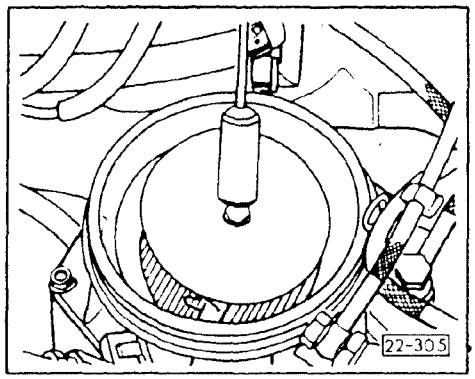

Air flow sensor, checking/adjusting

Sensor plate lever/control plunger, checking

- actuate starter for 10 seconds (with coil wire disconnected and grounded) or activate remote control **US 4480/3** for 10 seconds
- using pliers or a magnet, lift sensor plate through entire range of lever and control plunger travel
  - an even resistance must be felt
- move sensor plate quickly from raised position to rest position
  - **NO** resistance should be felt

If resistance felt
- replace air flow sensor

If sensor plate lever is hard to move upward, but moves freely downward
  - control plunger sticking
- fuel distributor must be replaced

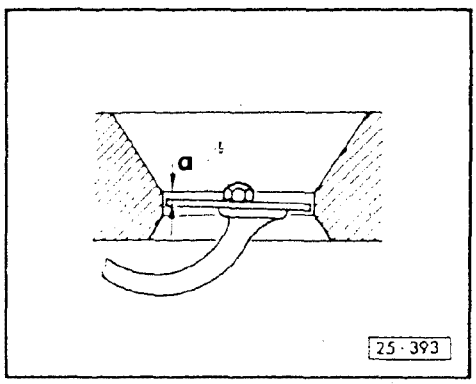

Air flow sensor plate rest position, checking/adjusting

Checking

- upper edge of air flow sensor plate must be below lower edge of air cone
  - a = 1.9 to 3.0 mm (0.875 to 0.118 in)

Adjusting

- raise air flow sensor plate
- adjust position of sensor plate by bending wire clip (**arrow**)

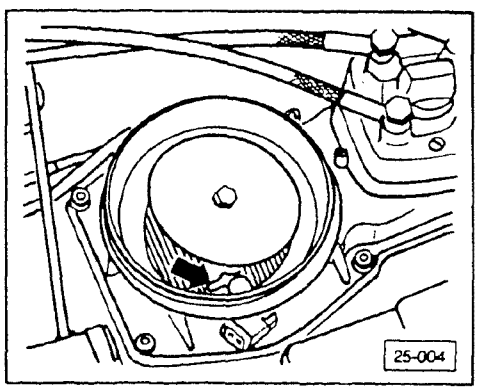

Note

You should try to achieve the smaller setting if at all possible.

CAUTION

Do not scratch venturi of air flow sensor. Do not bend leaf spring.

cardiagn.com

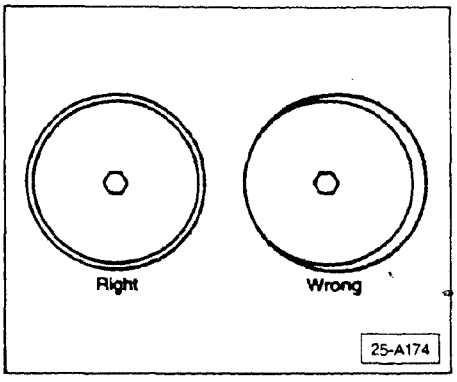

Sensor plate/sensor lever, centering

Note

Sensor plate must be centered in air cone. Plate edges must not touch sides of air cone or free movement of plate will be restricted.

Sensor plate, centering

- remove 10 mm adjusting bolt from center of plate
- coat bolt with locking compound
- install bolt finger-tight
- center plate using **US 1109** or by using two 0.1 mm (0.004 in) feeler gauges criss-crossed
- torque adjusting bolt
  - 5-7 Nm (40-60 in lb)

If plate cannot be centered
- remove air sensor housing and center sensor lever

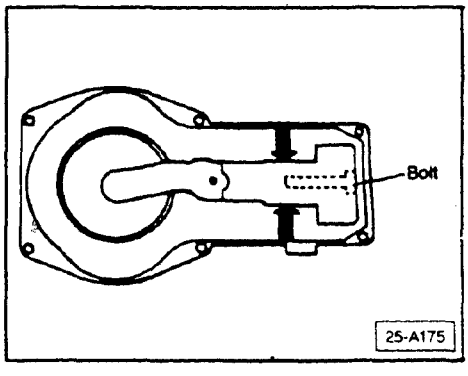

Sensor lever, centering

- remove clamping bolt on sensor lever counterweight
- clean bolt of any locking compound or dirt
- coat bolt with locking compound
- install bolt finger-tight
- center lever (**arrows**)
- tighten clamping bolt

cardiagn.com

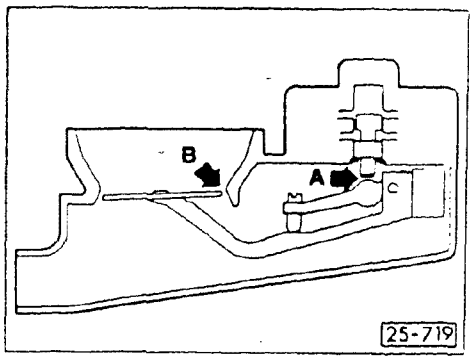

Air flow sensor plate free play, checking

Note

Free play is noted between control plunger and sensor plate lever (arrow **A**). It is measured on side of air flow sensor facing fuel distributor (arrow **B**).

Test conditions

- 4-16 mA differential pressure regulator current
- conforms to basic adjustment of sensor plate lever

- actuate starter for 10 seconds (with coil wire disconnected and grounded) or remote control **US 4480/3** for 10 seconds to energize fuel pump
- slightly lift air flow sensor until resistance is felt
  - minimum clearance: 1.0 mm (0.039 in)
  - maximum clearance: up to venturi cone 3.0 mm (0.118 in)

If clearance **NOT OK**
- perform sensor plate free play, adjusting with control plunger stop screw, section 25-250-5

Sensor plate lever, basic adjustment

Note

Always perform basic adjustment of lever when replacing fuel distributor or air flow sensor.

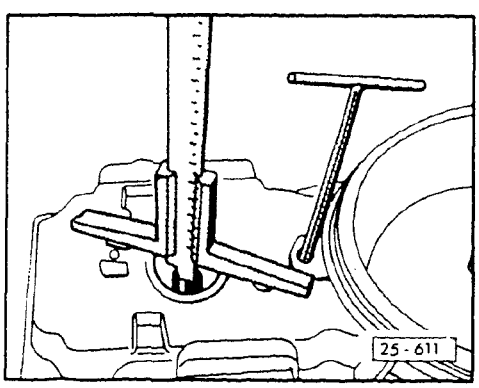

- check distance between contact surfaces for fuel distributor on air flow sensor and roller for sensor plate lever. If necessary, adjust via mixture adjustment screw
  - 18.5 ± 0.1 mm (0.73 ± 0.004 in)*

Note

*This value loses its validity after adjusting CO content to specification.

cardiagn.com

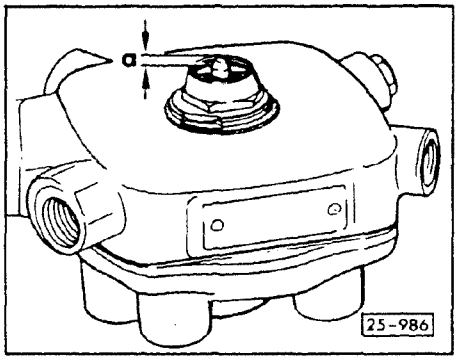

CAUTION

Mechanical cleaning of the control plunger is not permitted. If, after cleaning with solvent, the control plunger is scored or sticking, the entire fuel distributor should be replaced.

Control plunger, removing/installing

- note measurement "**a**" before removing stop screw
- remove stop screw and detach control plunger
- clean control plunger with gasoline before reinstalling
- check sealing ring of stop screw for damage; if necessary replace (smaller diameter of sealing ring points to control plunger)
- turn stop screw back in to measurement "**a**"
- check and adjust rest position and clearance of sensor plate

Stop screw sealing ring, replacing

- measure and note dimension "**a**" prior to removing the stop screw
- remove stop screw with sealing ring

Note

When replacing the stop screw sealing ring, do not pull out or allow the control plunger to fall out. If the control plunger is removed, clean with solvent before reinstalling.

- check sealing ring for damage, if necessary, replace (smaller diameter facing control plunger)
- install stop screw according to previously noted dimension "**a**"
- check rest position and idle travel of air flow sensor plate

cardiagn.com

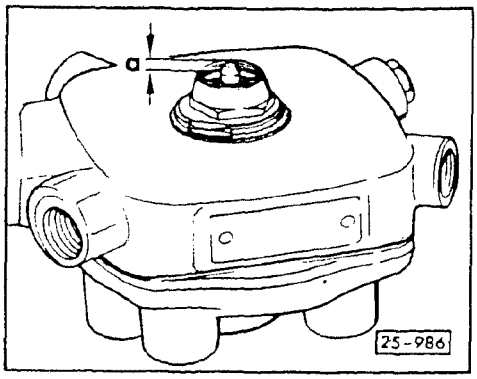

CAUTION

Mechanical cleaning of the control plunger is not permitted. If, after cleaning with gasoline, the control plunger is scored or sticking, the entire fuel distributor should be replaced.

Sensor plate free play adjusting with control plunger stop screw

- adjust free play of air flow sensor plate at control plunger stop screw as follows

Varying measurement "**a**":
(distance "**a**" =
approximately 0.6 mm (0.024 in)
between stop screw and collar of hex nut)

- turn stop screw clockwise — clearance larger
- turn stop screw counterclockwise — clearance smaller
- 1/4 turn of stop screw — approximately 1.3 mm/0.05 in. difference on sensor plate

- after adjusting free play, check idle speed, adjust if necessary
- if idle speed is adjusted, recheck free play, re-adjust free play if necessary

cardiagn.com

Potentiometer, checking/adjusting

CAUTION

The potentiometer is to be checked **ONLY** while mounted on the mixture control unit.

The potentiometer is to be replaced **ONLY** with the airflow sensor as an assembly.

Check the potentiometer if any of the following conditions are observed:

- fault code **2232** is displayed
- idle speed increases
- engine speed fluctuates at idle

Requirements

- engine oil temperature 80°C (176°F) minimum
- fault code display has been initiated
- valve cover gasket is tight and oil dipstick is inserted completely
- all electrical consumers switched **OFF**
- A/C switched **OFF**

- use multimeter **US 1119** and connector test kit **VW 1594** to perform all measurements
- radiator fan must **NOT** be running while taking measurements
- ignition timing point and CO content **OK**
- **NO** intake air leaks

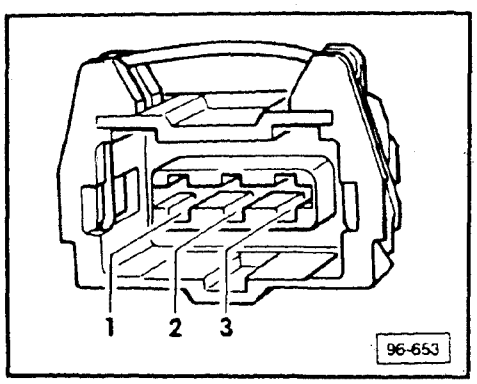

Checking

- disconnect potentiometer harness connector
- switch multimeter **US 1119** to 200 ohm range and connect between terminal **3** and ground
  - 0 to 0.8 ohms

If **NO**

- repair break in wiring between connector and control unit using wiring diagram
- switch multimeter to 20 volt range and connect between terminals **1** and **3**

cardiagn.com

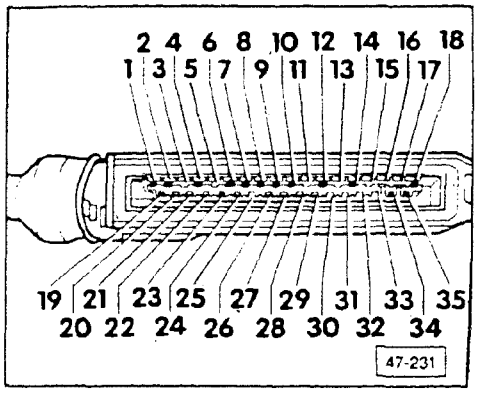

- switch **ON** ignition
  - 4.35 to 5.35 volts (record value)

If **NO**

- check potentiometer wiring as follows:
- switch **OFF** ignition
- remove trim from glove compartment
- push locking knob for control unit and pull out control unit from below

- remove harness connector from fuel injection control unit

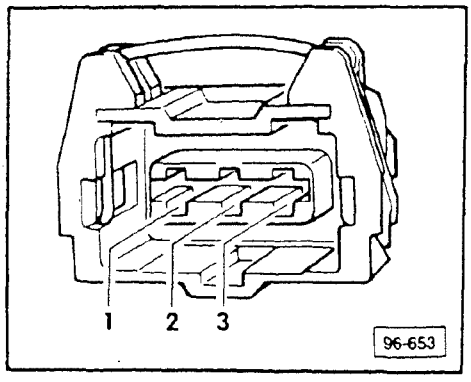

- switch **US 1119** to ohms scale and check continuity between the potentiometer harness connector and fuel injection control unit harness connector as follows:

Potentiometer harness connector terminals	Fuel injection control unit harness connector terminals
1 ←→	26
2 ←→	23
• 0.0 to 0.8 ohms	

If **NO**

- check for break in wiring using wiring diagram

If **YES**

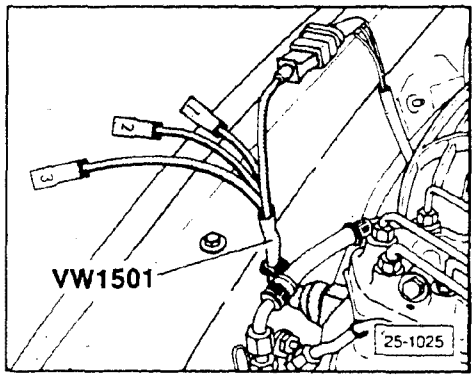

- connect test adapter **VW 1501** between potentiometer and potentiometer harness connector
- switch multimeter to 2 volts range and connect to terminals **2** and **3** of test adapter **VW 1501**
- switch **ON** ignition
  - (with airflow sensor plate in rest position): 0 to 200 mV

cardiagn.com

- connect engine tester **VW 1367**

> **CAUTION:**
>
> Make sure that the **VW 1367** Top Dead Center pickup is fully inserted into the transmission housing.

- insert spare fuse into top of fuel pump relay (do **NOT** remove until test is completed)
- start engine and run at idle
- remove harness connector from idle stabilizer
  - engine speed must increase

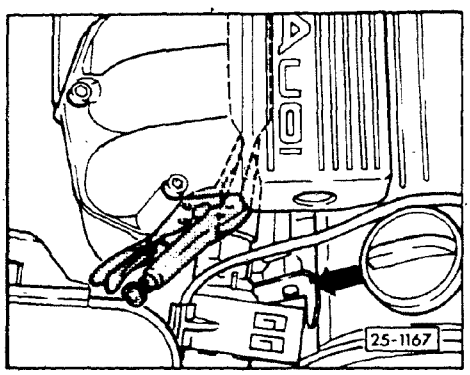

- remove idle stabilizer valve from mount
- clamp upper hose with pliers until an engine speed of 800 ± 20 RPM along with an ignition angle of 13 to 17° BTDC is displayed on the **VW 1367**

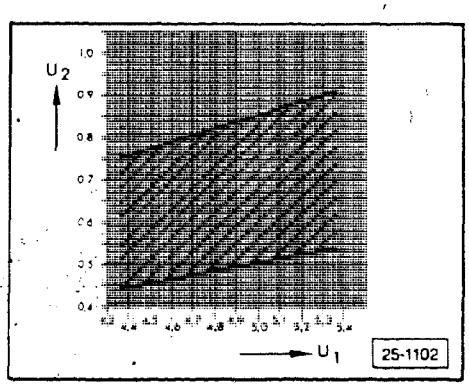

- read output voltage (U2) of potentiometer and record, then compare to U1 voltage on diagram (which was recorded earlier)

U1 = supply voltage of potentiometer between terminals **1** and **3**

U2 = output voltage of potentiometer between terminals **2** and **3** (measured with engine at idle, 800 ± 20 RPM)

If the U2 measures slightly below the lower tolerance range of the graph

- check intake air boot, crankcase ventilation hoses, carbon canister hoses and vacuum lines for leaks
- after eliminating leaks, repeat test

If **NO** leaks are found
- adjust potentiometer

cardiagn.com

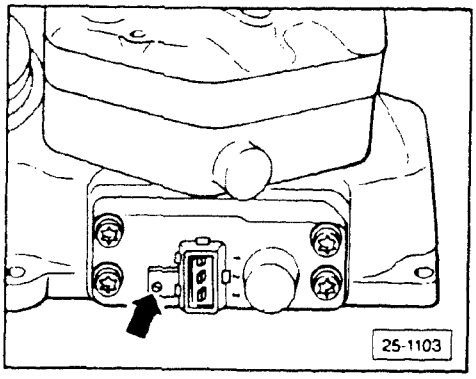

Potentiometer, adjusting

- switch **OFF** ignition
- remove test adapter **VW 1501** from potentiometer
- reconnect idle stabilizer valve harness connector

- carefully remove sealing compound from potentiometer trim screw (**arrow**)

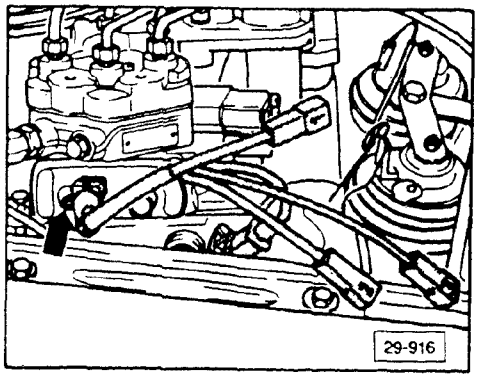

- reconnect test adapter **VW 1501** between potentiometer (**arrow**) and potentiometer harness connector
- switch multimeter to 2 volts scale and connect to terminals **2** and **3** of test adapter **VW 1501**

- start engine and run at idle
- remove harness connector from idle stabilizer valve

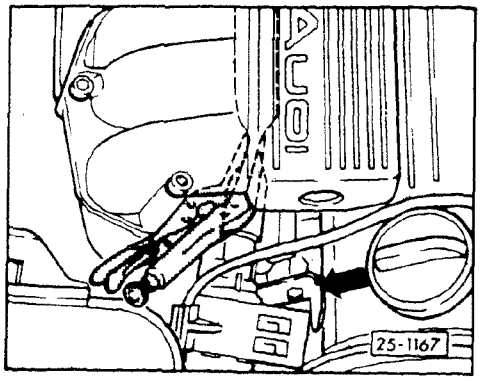

- clamp upper hose with pliers until an engine speed of 800 ± 20 RPM is indicated on **VW 1367**, secure pliers at this setting

cardiagn.com

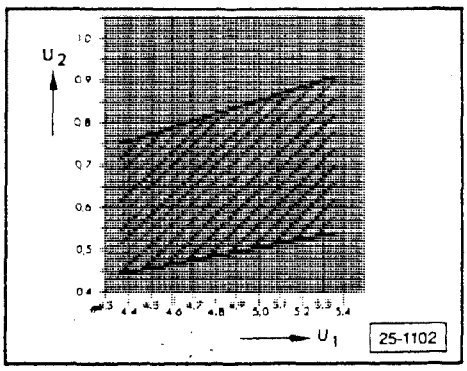

- adjust potentiometer trim screw until voltage value (U2) falls within the outlined area of the graph

If an acceptable value **CANNOT** be obtained by adjusting the potentiometer trim screw

- remove fuel distributor from air flow sensor assembly
- replace air flow sensor assembly including potentiometer

Note

NO potentiometer adjustment is necessary if the air flow sensor assembly is replaced.

If acceptable values **ARE** obtained according to the graph

- apply sealing paint to potentiometer trim screw

cardiagn.com

CONTINUED IN THE

BEGINNING OF NEXT ROW

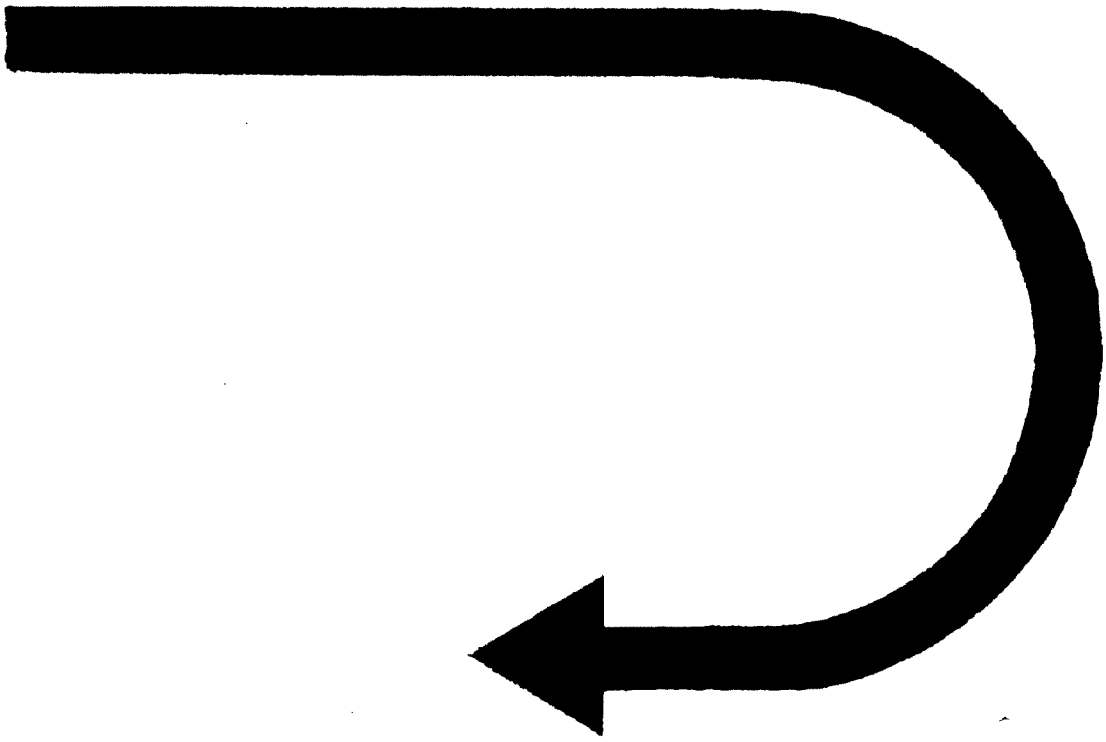

cardiagn.com

Throttle valve potentiometer (G 69), checking/adjusting

For vehicles with "097 Automatic transmission"

- located on underside of throttle body
- the idle (**F 60**) and full throttle switches (**F 81**) are part of the throttle valve potentiometer (**G 69**) assembly
- the throttle valve potentiometer (**G 69**) becomes adjusted when the idle switch is adjusted
- the full throttle switch (**F 81**) becomes adjusted when the idle switch is adjusted
- only perform the following procedure if the corresponding fault is indicated during 097 Automatic transmission Self-diagnosis
- always return the automatic transmission control unit (**J 217**) to its basic setting after completing fuel system repairs or adjustments, see Repair Group D3 for additional information

Voltage supply, checking

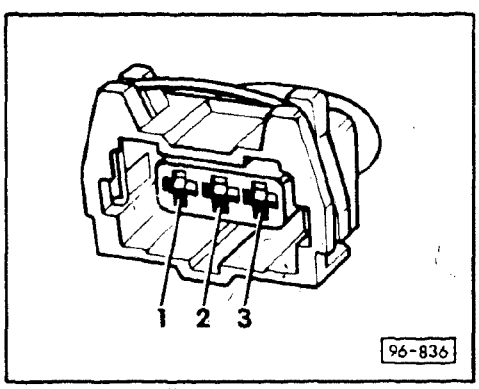

- switch **OFF** ignition
- disconnect potentiometer harness connector
- switch **Fluke 83** multimeter to 20 Volt range
- connect multimeter between terminal **1** and ground
- switch **ON** ignition
  - must be between 4.5 and 5.5 Volts
- connect multimeter between terminals **1** and **2** and then between terminals **1** and **3**
  - must be between 4.5 and 5.5 Volts

If all voltage readings are obtained,

- measure potentiometer resistance, see procedure and specifications later in this section

If one or more voltage readings are not obtained,

- switch **OFF** ignition
- check wiring for open or short circuit between potentiometer harness connector and control unit (**J 217**) harness connector using wiring diagram
- repair or replace as necessary

cardiagn.com

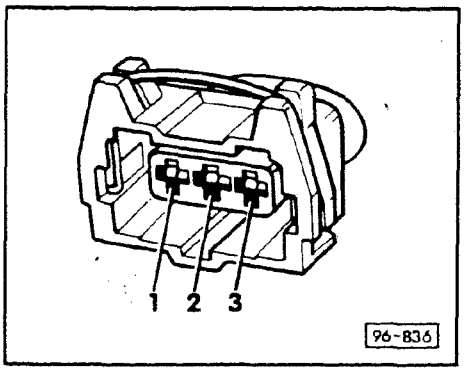

Potentiometer harness connector terminal assignments	Corresponding terminals in control unit harness connector
1 – positive ←→	10
2 – ground ←→	29
3 – signal ←→	9

CAUTION

Only use gold plated terminals when repairing the potentiometer harness connector.

If wiring **OK**

- replace automatic transmission control unit (**J 217**)

If all voltage readings are obtained, check potentiometer resistance as follows:

Resistance Checking

- switch **Fluke 83** multimeter to resistance range

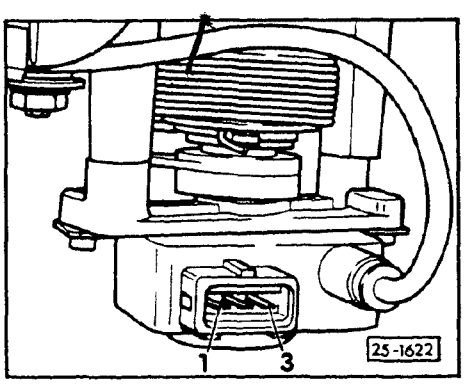

- connect multimeter between terminals **1** and **2**
  - must be between 1500 and 2600 Ohms
- connect multimeter between terminals **2** and **3**
  - resistance (in idle position) must be between 750 and 1300 Ohms
- slowly open throttle to wide open position
  - resistance must increase to a maximum of 3600 Ohms

If any of the resistance measurements are not obtained,

- replace throttle potentiometer (**G 69**)

cardiagn.com

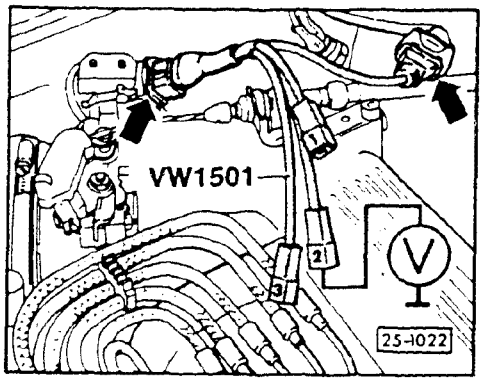

Idle and full throttle switches, checking/adjusting

Voltage supply for idle and full throttle switch, checking

- remove harness connector to idle and full throttle switch on throttle body (**arrow**) and connect test adaptor **VW 1501** between throttle switch and harness connector
- connect multimeter **US 1119** between terminal **2** of **VW 1501** adaptor and engine ground
- switch ignition **ON**
  - approximately 12 volts

If **NO**
- repair break in wiring according to wiring diagram

Idle switch, checking (Fault code 2121)

- connect multimeter **US 1119** between terminal **1** of **VW 1501** and ground
  - approximately battery voltage
- switch **US 1119** multimeter to ohms range
- move throttle valve 0.5 to 0.7 mm (0.020 to 0.028 in)

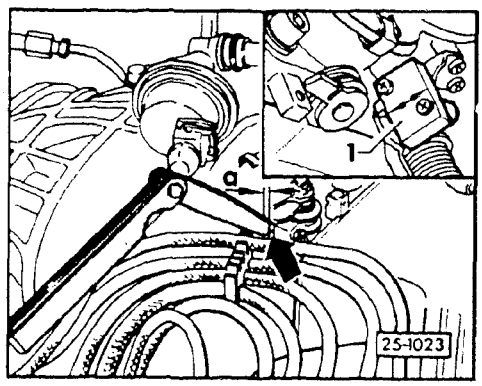

Note

This measurement is made with a feeler gauge between the throttle valve stop and the adjustment screw.

- resistance should change from 0 ohms (with throttle closed) to ∞ ohms as throttle gap increases beyond 0.5 mm (0.020 in)

Adjusting

If **NO**
- adjust idle switch (gap "**a**")
  - specification:
    .15 to .5 mm (0.006 to 0.020 in)

If **YES**
- check full throttle switch

cardiagn.com

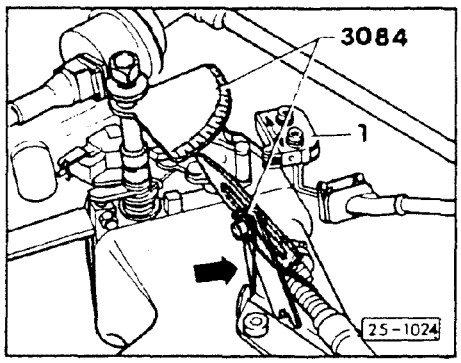

Full throttle switch, checking (Fault code 2123)

- connect multimeter **US 1119** between terminal **3** of throttle switch and ground
  - approximately battery voltage
- fasten pointer for protractor **3084** to adjuster for accelerator cable (using a rubber band, see **arrow**)
- screw **3084** protractor **3084** onto throttle shaft (unscrew nut on throttle shaft if necessary)
- push throttle lever to full open (at stop limit) and zero pointer + disc
- close throttle to approximately 30°, then slowly move toward full throttle position until full throttle switch engages (zero ohms indicated)
  - 10 ± 4° before contacting full throttle limit stop

If **NO**

- replace and adjust full throttle switch

cardiagn.com

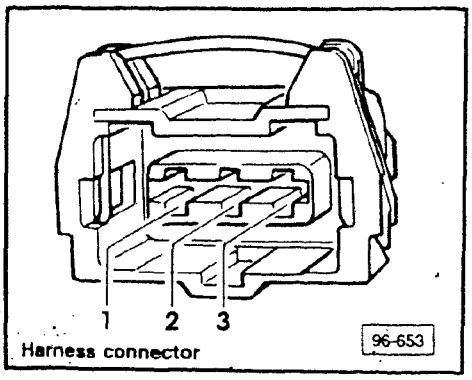

Harness connector

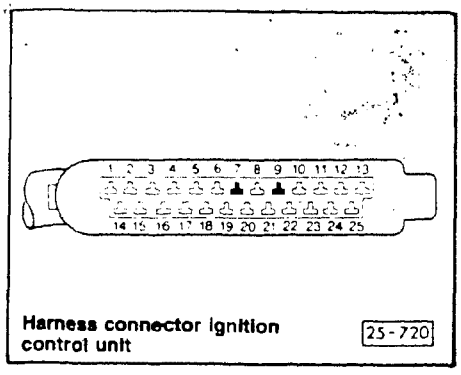

Harness connector ignition control unit

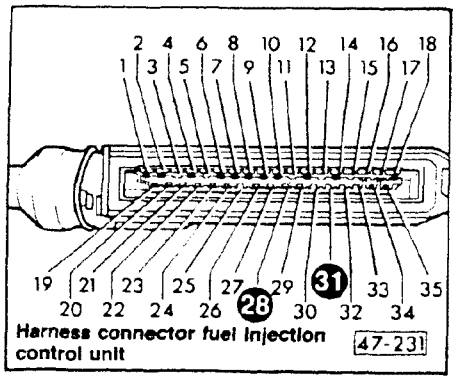

Harness connector fuel injection control unit

If **YES**

- check wiring between throttle switch harness connector and fuel injection control unit harness connector as follows:
- remove harness connector from fuel injection control unit
- pull out electronic ignition control unit
- using multimeter check continuity between throttle switch harness connector and control unit harness connector terminals as follows:

throttle switch harness connector		ignition control unit harness connector
1	⟷	7
3	⟷	9

- approximately 0.2 ohm

throttle switch harness connector		fuel injection control unit harness connector
1	⟷	28
3	⟷	31

- approximately 0.2 ohm

If **NO**

- repair break in wiring using wiring diagram

cardiagn.com

Idle (F 60) and full throttle switches (F 81), checking/adjusting

For vehicles with "097 Automatic transmission"

- located on underside of throttle body
- the idle (**F 60**) and full throttle switches (**F 81**) are part of the throttle valve potentiometer (**G 69**) assembly
- the throttle valve potentiometer (**G 69**) becomes adjusted when the idle switch is adjusted
- the full throttle switch (**F 81**) becomes adjusted when the idle switch is adjusted
- always return the automatic transmission control unit (**J 217**) to its basic setting after completing fuel system repairs or adjustments, see Repair Group D3 for additional information

- remove throttle valve assembly
- loosen the two throttle potentiometer screws

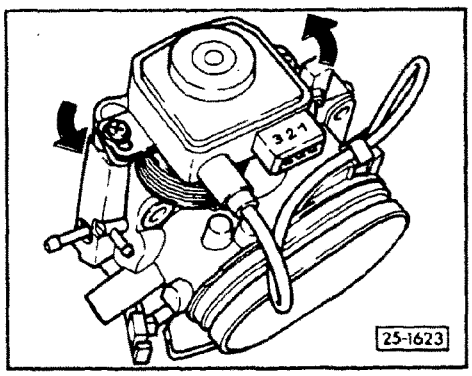

- turn throttle valve potentiometer in direction of arrow until stop is felt
  - throttle valve (throttle linkage) must not be moved

- tighten mounting screws in this position
- reinstall throttle valve assembly and adjust accelerator cable, see Repair Group 20 for additional information
- check idle switch again

cardiagn.com

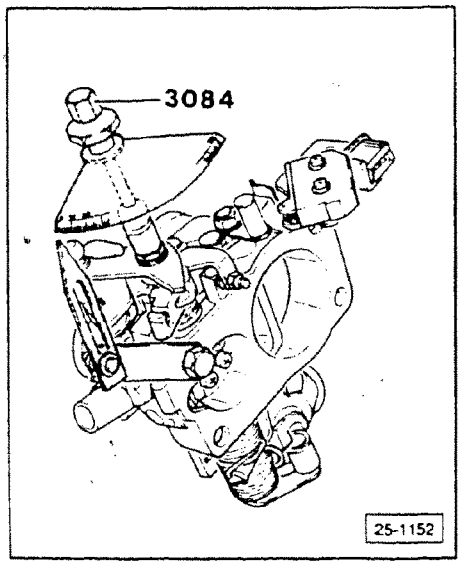

Throttle body dashpot, adjusting

Note

To adjust the dashpot the throttle body must first be removed.

- fasten pointer for protractor **3084** to throttle body (using a spare nut and bolt)
- thread protractor onto throttle shaft, if necessary remove throttle shaft nut
- zero the pointer/protractor

- open throttle 12 to 14 degrees
  - if properly adjusted: the dashpot roller, at this point of throttle travel, should just begin to lose contact with the dashpot plunger

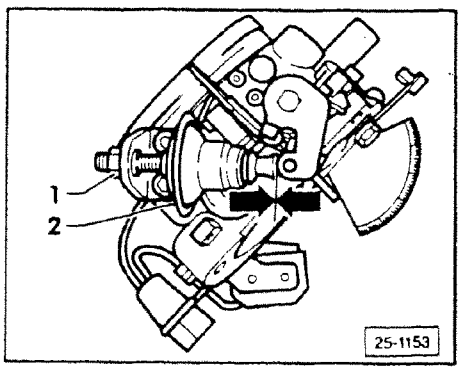

If **NO**

- loosen sealed lock nut **1** and turn dashpot **2** until a piece of thin paper can be slid between the roller and the dashpot plunger (**arrows**) without binding
- re-tighten locknut
- recheck, adjustment, re-adjust if necessary

cardiagn.com

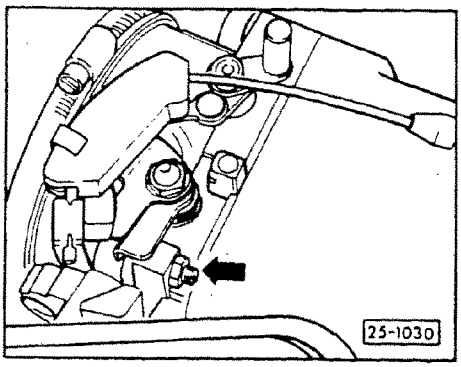

Throttle valve, basic adjustment

Note

Stop screw is set at factory and **should not be moved**. If screw position has been altered, check basic adjustment as follows:

- turn throttle stop screw counterclockwise until gap occurs between stop and screw
- turn screw (**arrow**) in until it touches stop

Note

In order to determine the exact stop point of the screw, place a thin piece of cellophane between the screw and the stop. Determine the stop point by tugging at the cellophane and turning the screw at the same time.

- turn screw clockwise additional 1/2 turn
- check throttle switch adjustment

cardiagn.com

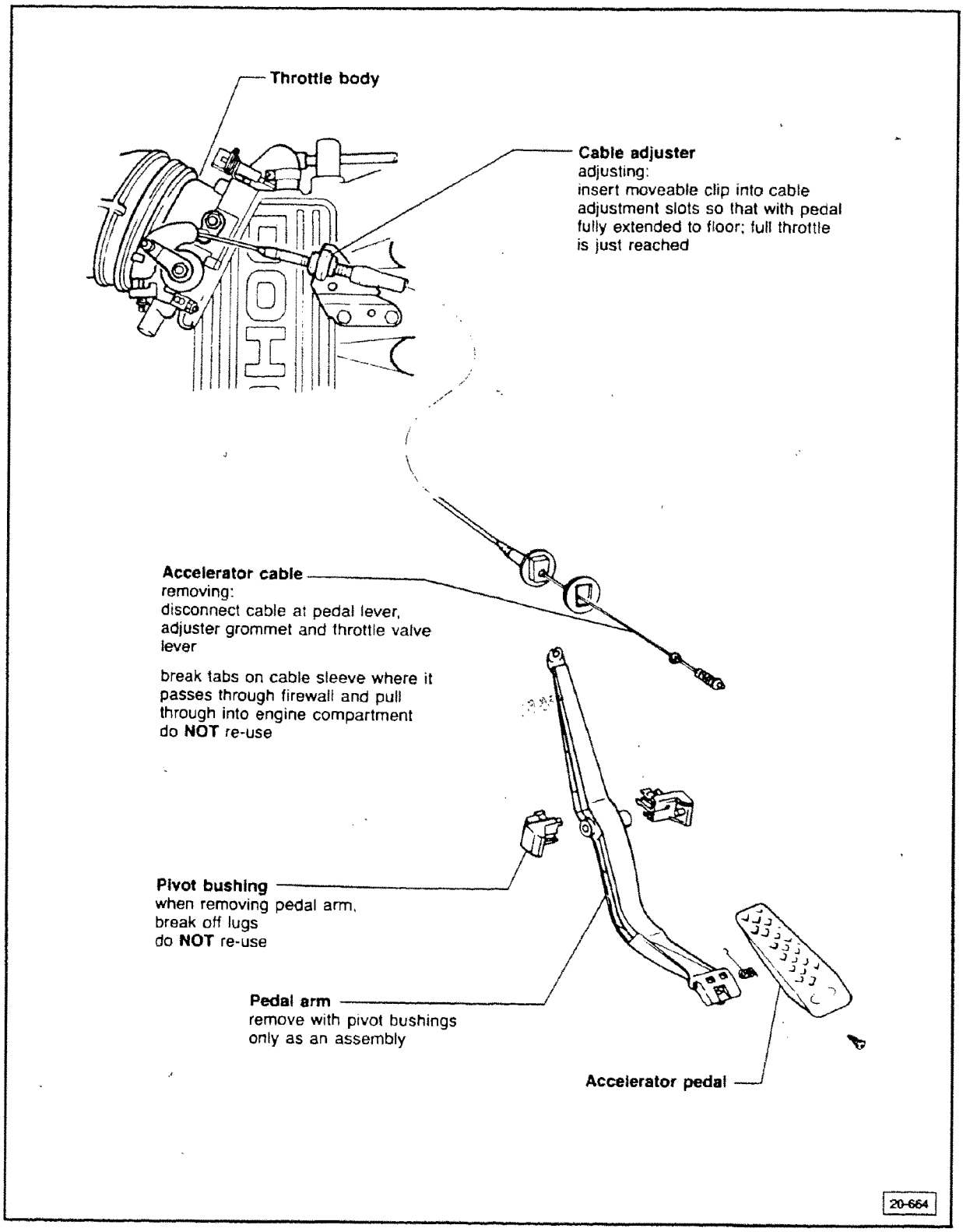

cardiagn.com

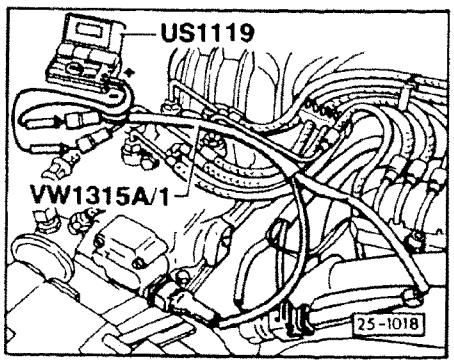

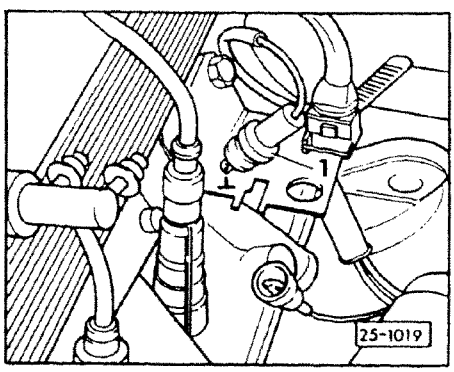

Oxygen sensor, checking (Fault code 2341)

Control system, checking

Check these first:

- engine oil temperature: minimum 80°C (176°F)
- differential pressure regulator OK

- connect multimeter **US 1119** to differential pressure regulator, using adaptor **VW 1315 A/1**
- run engine at idle

- disconnect oxygen sensor connector, (single connector with green wire)
- touch green oxygen sensor wire (1) to ground
  - after approximately 15 seconds, differential pressure regulator current must increase to approximately 10mA

If **NO**
- check wiring between fuel injection control unit and oxygen sensor harness connector (using wiring diagram)

If **NO** break in wiring is found
- replace fuel injection control unit

- reconnect oxygen sensor green wire
- start engine
- raise engine speed briefly to 3000 RPM (to warm oxygen sensor)
  - differential pressure regulator current must return to original mA value, then it **must** fluctuate

If **NO**
- replace oxygen sensor

cardiagn.com

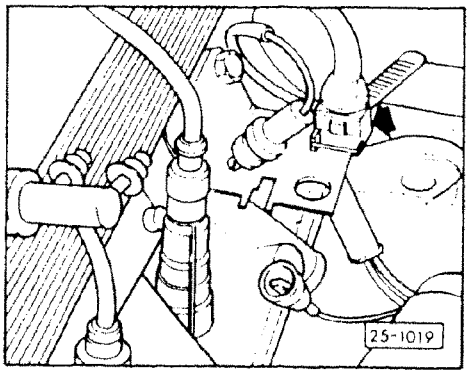

Oxygen sensor heating, checking

- disconnect oxygen sensor heating element connector from harness connector (**arrow**)

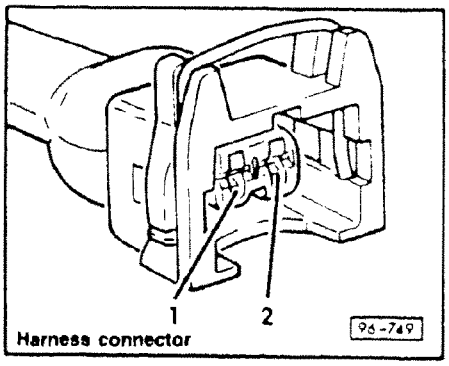

- connect multimeter **US 1119** between harness connector terminals **1** and **2**
- switch ignition **ON**
  - approximately 12 volts

If **NO**

- repair break in wiring using wiring diagram

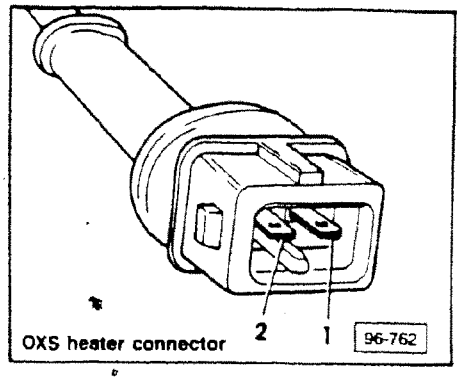

- connect multimeter **US 1119** between terminals **1** and **2** of oxygen sensor heating element connector
  - 3 to 15 ohms

If **NO**

- replace oxygen sensor

cardiagn.com

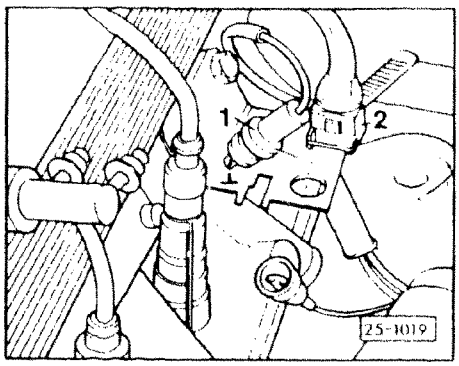

Oxygen sensor, removing and installing

Note

Replace the oxygen sensor at 60,000 miles
An OXS mileage counter is not used.

- disconnect oxygen sensor lead (**1**)
- disconnect oxygen sensor heater connector (**2**) from harness connector

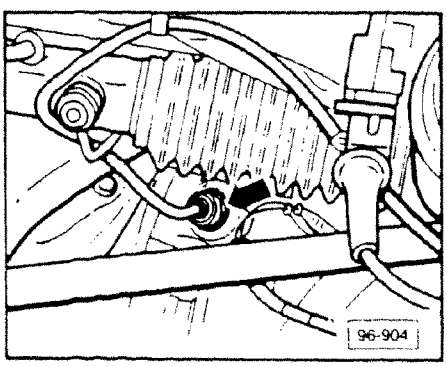

- unscrew oxygen sensor (**arrow**) from exhaust (just ahead of catalyst)
- installation is reverse of removal procedure

CAUTION

Oxygen sensor threads must be coated with Anti-seize compound before installing. If the sensor has not already been coated in production, carefully apply a coating to the threads taking extreme care not to allow Anti-seize into the sensor slots.

cardiagn.com

CONTINUED IN THE

BEGINNING OF NEXT ROW

cardiagn.com

Acceleration enrichment, checking

Check these first:

- Engine temperature maximum 30°C (86°F)
- Differential pressure regulator **OK**

Note

To perform this check the control unit is looking for a temperature signal lower than 30°C (86°F). If the engine is warmer than 30°C (86°F), disconnect the temperature sensor and substitute a cooled down sensor which has been grounded with a jumper wire.

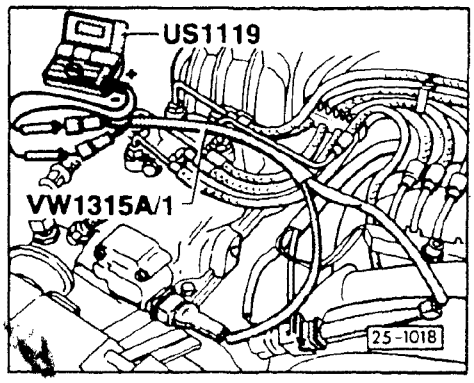

- connect multimeter **US 1119** to differential pressure regulator, using adaptor **VW 1315 A/1**

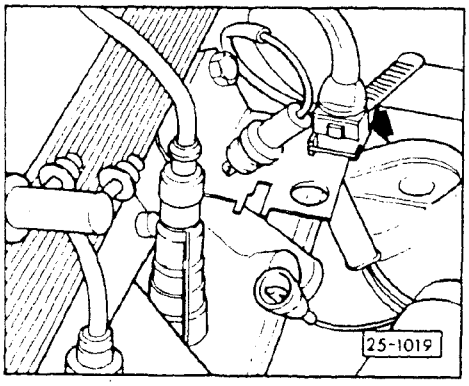

- disconnect oxygen sensor harness connector **1**
- run engine at idle
  - 1 to 3mA

If **NO**

- check coolant temperature sensor, section 25-420

cardiagn.com

- depress accelerator pedal briefly
  - differential pressure regulator current must increase to a minimum of 6mA

Note

As RPM increases, differential pressure regulator current must also increase. If this current increases only when RPMs drop, check the operation of the air flow sensor potentiometer.

If minimum 6mA is **NOT** obtained
- shut off engine

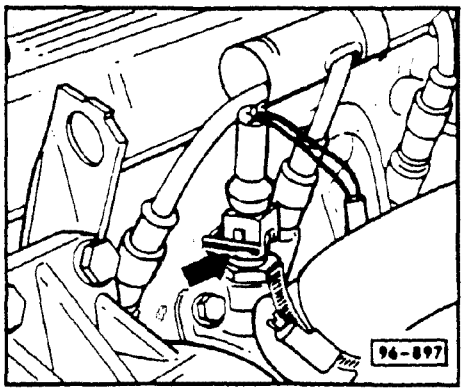

- disconnect coolant temperature sensor harness connector (**arrow**)

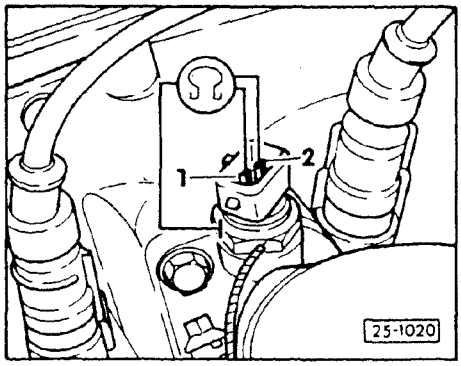

- connect multimeter **US 1119** between sensor terminal **1** and engine ground, take reading
- repeat between sensor terminal **2** and engine ground, take reading
  - greater than 1 k ohm

If you measure 1 k Ohm or less at a coolant temperature of approximately 30°C (86°F):
- replace coolant temperature sensor
- repeat check

cardiagn.com

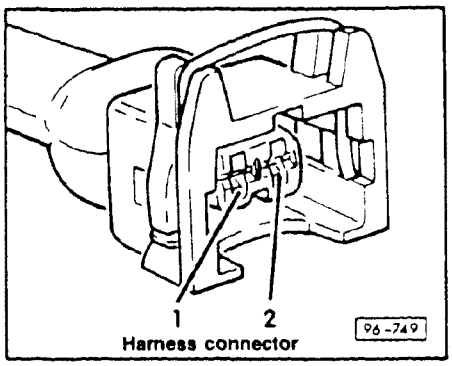

If **OK**

- remove harness connector from coolant temperature sender
- connect multimeter **US 1119** between terminal **1** of the harness connector and engine ground
- switch ignition **ON**
  - 4.5-5.5 volts
- repeat between terminal **2** and engine ground
  - 4.5-5.5 volts

If these voltages are **NOT** obtained

- repair break in wiring between the control units and the connectors, using the wiring diagram

If voltages are **NOT** obtained and no break in wiring is found

- replace respective control unit

cardiagn.com

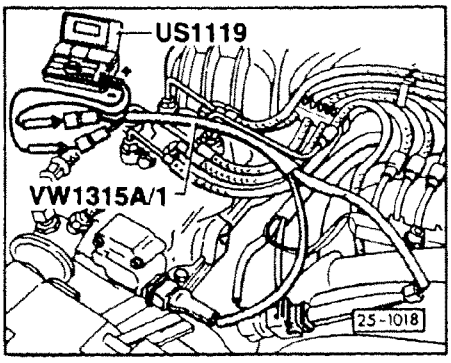

Deceleration fuel shutoff, checking

Check these first:

- Differential pressure regulator **OK** see output tests section 25-350
- Engine oil temperature minimum 80°C (176°F)

- connect multimeter **US 1119** to differential pressure regulator using test adaptor **VW 1315 A/1**
- run engine at idle
- raise engine speed to over 3000 RPM
- snap throttle shut
  - 1 second after closing throttle, differential pressure regulator current must decrease to −50 to −60mA

At an engine speed of about 1200 RPM differential pressure regulator current raises back to about zero mA (nominal)

If **NO**

- adjust idle switch or repair break in wiring according to wiring diagram

cardiagn.com

Troubleshooting CIS-E III, output checks

Note

The following procedures describe output check activation for 1987 and 1988 vehicles using the fuel pump relay. For later models, see the **VAG 1551** procedures outlined in repair Group D2.

Do one after the other:

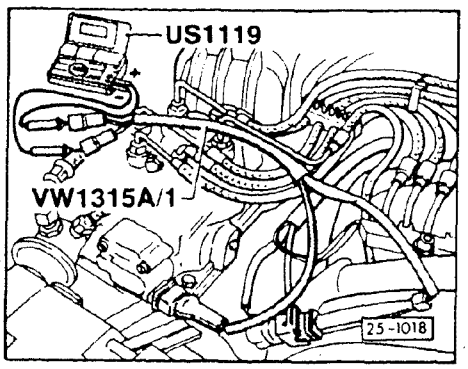

- connect multimeter **US 1119** to differential pressure regulator harness using adaptor **VW 1315 A/1**
- set meter to 200mA scale

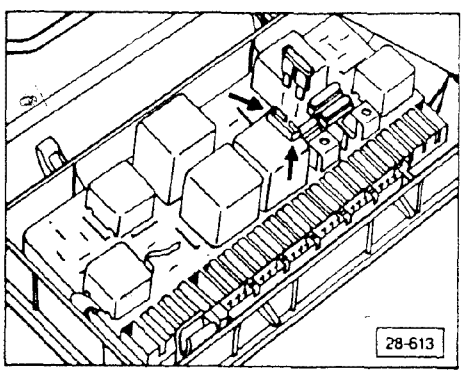

- insert spare fuse in top of fuel pump relay (**arrows**)
- turn ignition **ON**, remove fuse after four seconds
  - fault indicator light will display **4341**

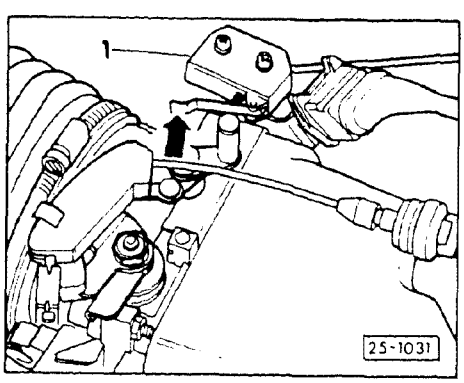

Differential pressure regulator check (code 4341)

- close full throttle switch (**arrow**)
  - differential pressure regulator current switches to 10mA (should be approximately 100mA with full throttle switch in open position)

If approximately 10mA is **NOT** obtained
- check differential pressure regulator

For detailed check, see section 25-350

cardiagn.com

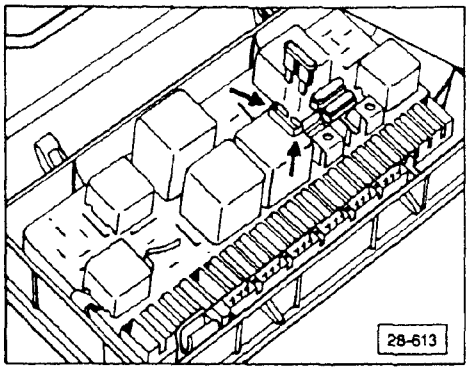

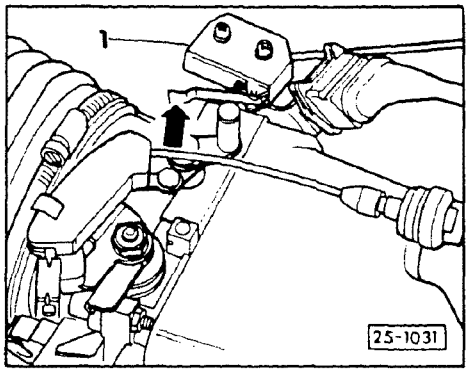

Output checks

Carbon canister shutoff solenoid, check (output code 4343)

- re-insert spare fuse in top of fuel pump relay for four seconds (**arrows**), then remove
  - fault indicator light will display **4343**
- close full throttle switch
  - shutoff solenoid clicks on and off when full throttle switch is closed

For detailed check, see section 25-360

Idle stabilizer valve, check (output code 4431)

- re-insert spare fuse in top of fuel pump relay for four seconds (**arrows**), then remove
  - fault indicator light will display **4431**
- close full throttle switch (**arrow**)
  - idle stabilizer valve must cycle when full throttle switch is closed

For detailed check, see section 25-370

Cold start valve, check (output code 4443)

- re-insert spare fuse in top of fuel pump relay for four seconds (**arrows**), then remove
  - fault indicator light will display **4443**
- close full throttle switch
  - cold start valve clicks **ON** and **OFF** for a maximum of 10 seconds when full throttle switch is closed

For detailed check, see section 25-380

Note

If you find a problem with any of these components, first check the component for continuity using **US 1119** multimeter.

cardiagn.com

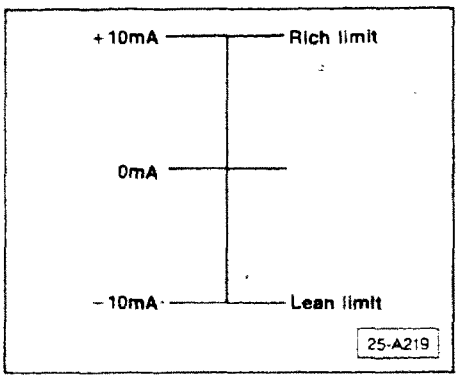

Differential pressure regulator control, checking (output code 4341)

Note

The following procedures describe output check activation for 1987 and 1988 vehicles using the fuel pump relay. For later models, see the **VAG 1551** procedures outlined in repair Group D2.

Note

The operating range is +10mA to −10mA. The nominal CO adjusting point is 0mA. This insures better engine operation if an electrical failure should occur, by providing a fuel mixture which is in the range of the nominal setting.

Check this first:

- ignition in **OFF** position

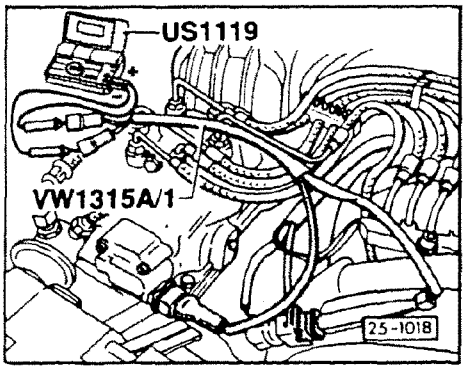

- connect **US 1119** multimeter to differential pressure regulator with adaptor **VW 1315 A/1**. Set meter to 200mA DC scale

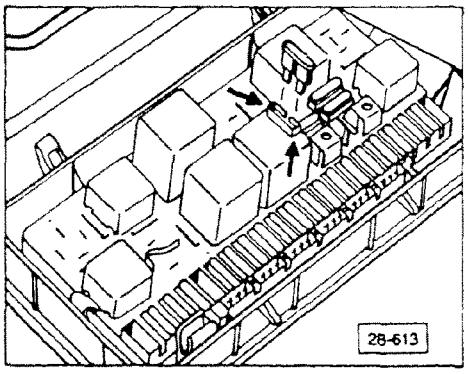

- insert spare fuse in top of fuel pump relay (**arrows**)
- turn ignition **ON**, remove fuse after 4 seconds
  - indicator light displays **4341**

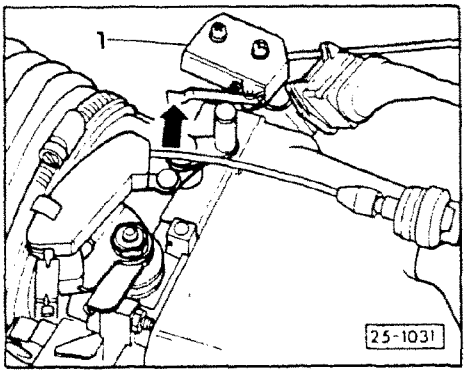

- close full throttle switch (**arrow**)
  - differential pressure regulator current switches to 10mA (is 100mA with full throttle switch open)

If **NO**

- continue checking on Page 25.19

cardiagn.com

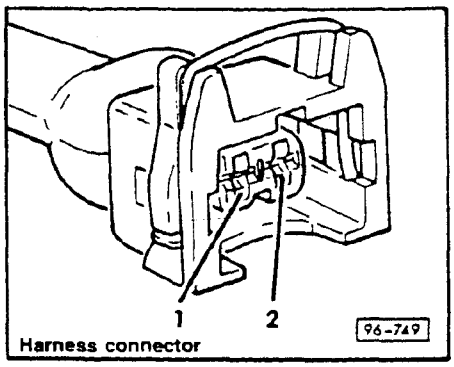

Harness connector

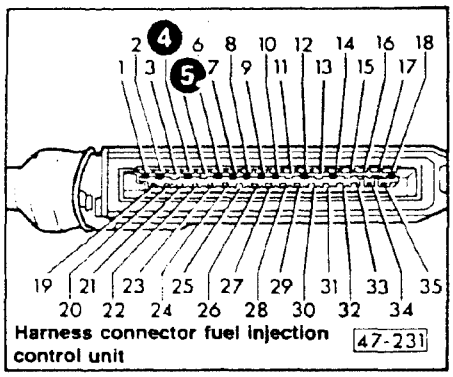

Harness connector fuel injection control unit

This check to be performed after check on previous page

- disconnect harness connector from differential pressure regulator
- connect multimeter **US 1119** between terminal **2** of harness connector and engine ground
- switch ignition **ON**
  - approximately 4.5-5 volts
- connect multimeter **US 1119** between terminals **1** and **2**
  - approximately 4.5-5 volts

If **YES**
- replace differential pressure regulator

If **NO**
- disconnect fuel injection control unit harness connector
- with multimeter **US 1119**, check continuity between fuel injection control unit harness connector and differential pressure regulator harness connector

35 PIN connector		2 PIN connector
terminal **4**	←——→	terminal **1**
terminal **5**	←——→	terminal **2**

  - approximately 0.2 ohm

If **NO**
- repair break in wiring using wiring diagram

If **YES**
- replace fuel injection control unit

cardiagn.com

Carbon canister shut-off solenoid, output check (Output code 4343)

Note

The following procedures describe output check activation for 1987 and 1988 vehicles using the fuel pump relay. For later models, see the **VAG 1551** procedures outlined in repair Group D2.

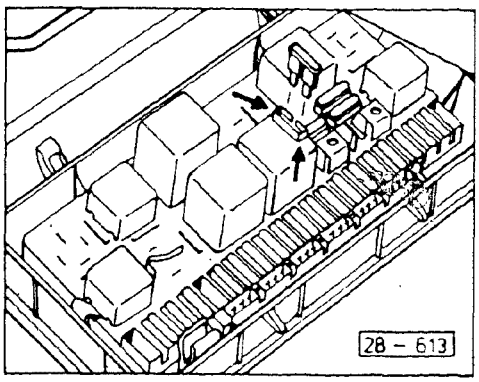

Check this first:

- Ignition switched to **OFF** position

- insert spare fuse in top of fuel pump relay (**arrows**)
- turn ignition **ON**, remove fuse after four seconds
- re-insert fuse for four seconds, then remove
  - fault indicator light displays **4343** code

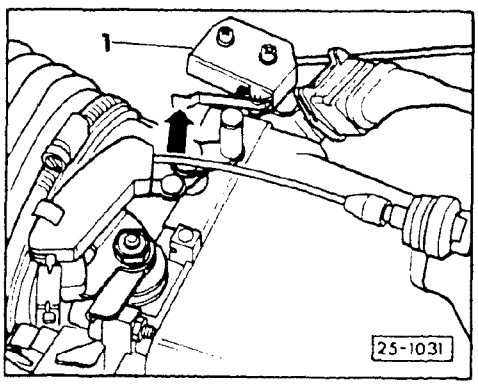

- close full throttle switch (**arrow**)
  - shut-off solenoid clicks **ON** and **OFF** when full throttle switch is closed

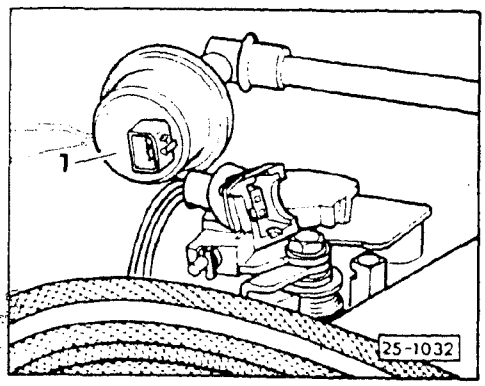

If **NO**

- proceed as follows
- disconnect carbon canister shut-off solenoid harness connector (**1**)

cardiagn.com

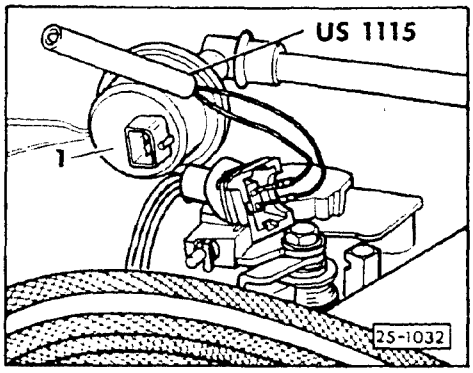

- connect LED tester **US 1115** to harness connector terminals **1** and **2** using jumper wire
  - **US 1115** must light up (blink)

If **YES**
- replace carbon canister shut-off solenoid

If **NO**
- connect multimeter US 1119 between terminal **1** of connector and ground
  - approximately 12 volts

If **NO**
- check wiring as follows

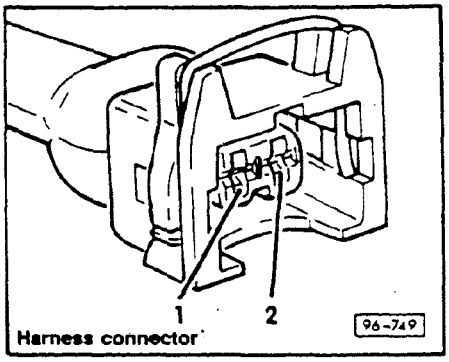

Harness connector

- disconnect harness connector from fuel injection control unit

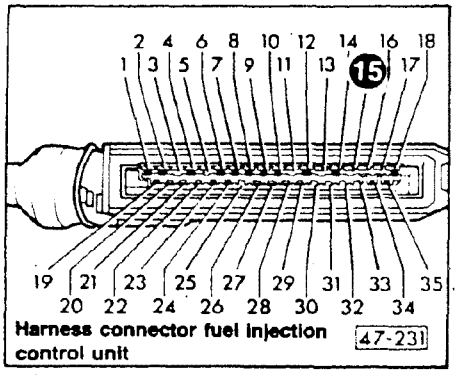

Harness connector fuel injection control unit

- with multimeter **US 1119**, check resistance between terminal **2** of the solenoid harness connector and terminal **15** of fuel injection control unit harness connector (35 pin)
  - approximately 0.2 ohm

If **NO**
- repair break in wiring using wiring diagram

If **YES**
- replace fuel injection control unit

cardiagn.com

Idle stabilizer valve power, checking (Output code 4431)

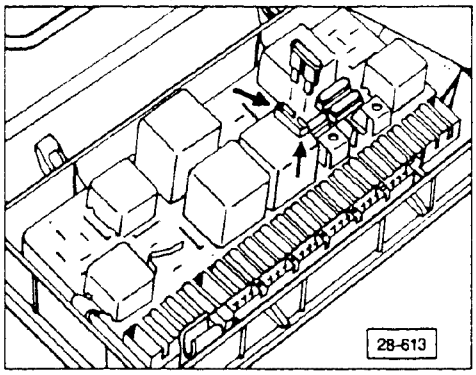

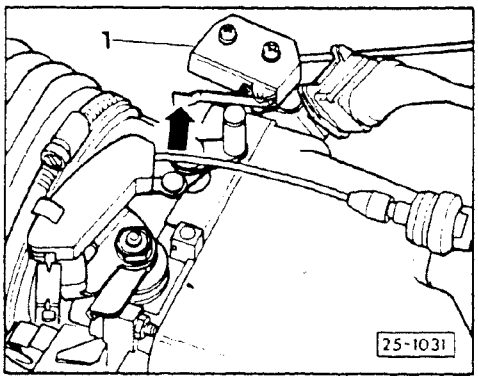

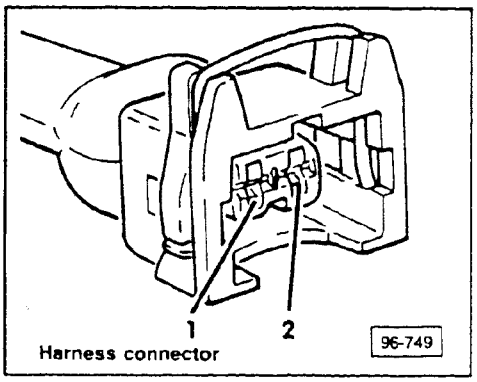

Note

The following procedures describe output check activation for 1987 and 1988 vehicles using the fuel pump relay. For later models, see the **VAG 1551** procedures outlined in repair Group D2.

Check this first:

- Ignition switched to **OFF** position

- insert spare fuse in top of fuel pump relay (**arrows**)
- turn ignition **ON**, remove fuse after four seconds
- re-insert fuse for four seconds, then remove
- re-insert fuse for four seconds, then remove
  - fault indicator light displays **4431** code

- close full throttle switch (**arrow**)
  - idle stabilizer valve must cycle (click)

If **NO**
- disconnect harness connector from idle stabilizer valve

- connect LED tester **US 1115** to terminals **1** and **2** of harness connector
- go step by step through the "output" tests until **4431** is displayed
  - **US 1115** LED tester must blink **ON** and **OFF**

If **YES**
- replace idle stabilizer valve

If **NO**
- connect multimeter **US 1119** between terminal **2** of harness connector and engine ground
  - approximately 12 volts

If **NO**
- repair break in wiring using wiring diagram

If **YES**
- switch ignition **OFF**

cardiagn.com

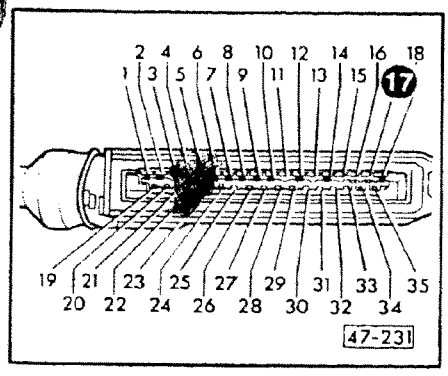

- disconnect harness connector from fuel injection control unit
- with multimeter **US 1119**, check continuity between fuel injection control unit harness connector terminal **17** and idle stabilizer valve harness connector, terminal **1**
  - approximately 0.2 ohm (continuity)

If **NO**
- repair break in wiring using wiring diagram

If **YES**
- replace fuel injection control unit

cardiagn.com

Cold start valve power, output check (Output code 4443)

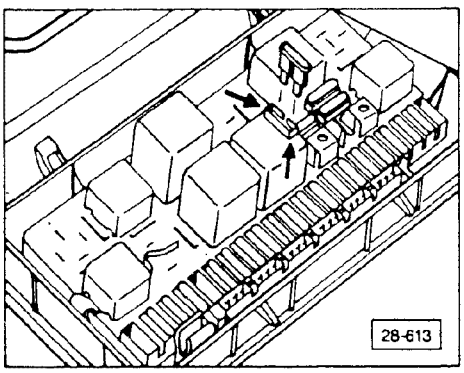

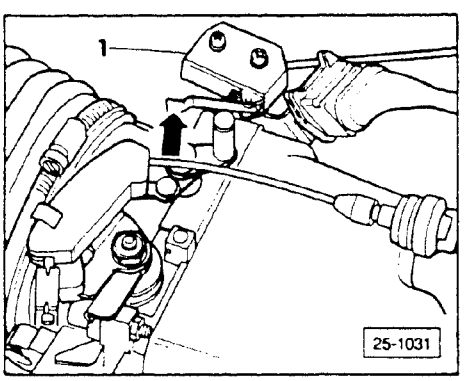

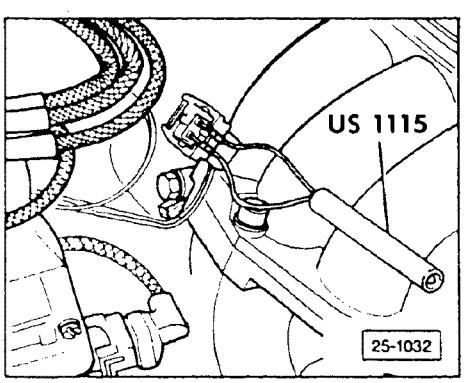

Note

The following procedures describe output check activation for 1987 and 1988 vehicles using the fuel pump relay. For later models, see the **VAG 1551** procedures outlined in repair Group D2.

Power supply, checking

Requirement:

- ignition switched to **OFF** position

- insert spare fuse in top of fuel pump relay (**arrows**)
- turn ignition **ON**, remove fuse after four seconds
- re-insert fuse for four seconds, then remove
- re-insert fuse for four seconds, then remove
- re-insert fuse for four seconds, then remove
  - fault indicator light displays **4443** code

- close full throttle switch (**arrow**)
  - cold start valve clicks **ON** and **OFF** (for a maximum of ten seconds) when full throttle switch is closed

If **NO**

- disconnect cold start valve harness connector

- connect **US 1115 LED** tester between terminals **1** and **2** of cold start valve harness connector
  - **US 1115** should light up

cardiagn.com

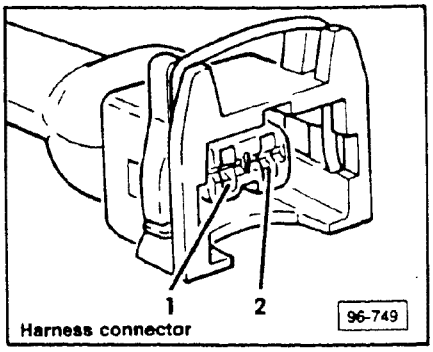

Harness connector

If **YES**
- replace cold start valve

If **NO**
- connect multimeter **US 1119** between cold start valve harness connector terminal **1** and ground
  - approximately 12 volts

If **NO**
- repair break in wiring, using wiring diagram

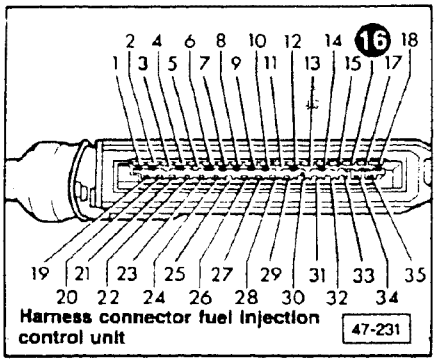

Harness connector fuel injection control unit

If **YES**
- disconnect harness connector from fuel injection control unit
- connect multimeter **US 1119** between terminal **2** of cold start valve harness connector and terminal **16** of fuel injection control unit harness connector
  - approximately 0.2 ohm (continuity)

If **NO**
- repair break in wiring, using wiring diagram

If **YES**
- replace fuel injection control unit

cardiagn.com

WARNING

Fire hazard. Do not smoke or have anything in area that can ignite fuel.

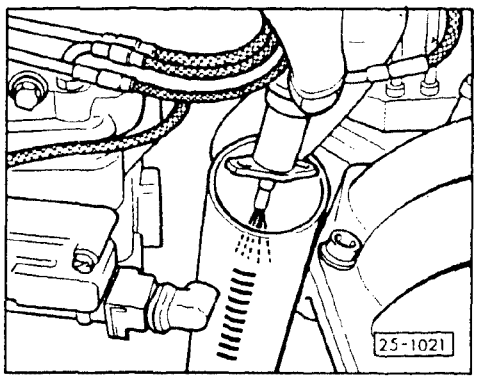

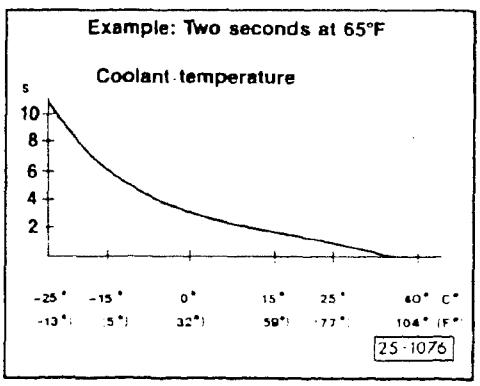

Functional check requirement

- engine coolant temperature maximum 30°C (86°F)

Note

If engine temperature exceeds 30°C (86°F), disconnect the coolant temperature sensor connector and re-connect it to a substitute sensor (which has been cooled down and jumper wire grounded).

- disconnect coil wire 4 from ignition distributor cap and connect to ground with jumper wire
- remove cold start valve and point nozzle into suitable container (leave electrical connector and fuel line connected)
- crank engine with starter for 10 seconds
  - cold start valve should spray fuel for period shown on graph
- wipe off nozzle with clean rag
- check valve for leaks
  - after one minute, valve should be dry and free of fuel

If valve is wet or leaking
- replace cold start valve
- repeat check

cardiagn.com

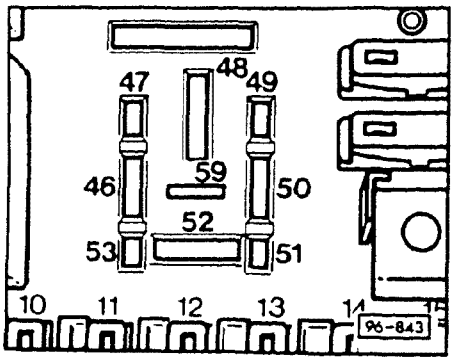

Fuel pump relay control, checking

- pull fuel pump relay out of relay panel, location **10**
- connect multimeter **US 1119** between terminals **48** and **50** of relay socket
  - approximately 12 volts
- connect multimeter **US 1119** between terminals **46** and **50** of relay socket
- switch ignition **ON**
  - approximately 12 volts

If **NO**
- correct break in wiring according to wiring diagram
- connect multimeter **US 1119** between terminals **46** and **47** of relay socket
- operate starter briefly
  - minimum 7 volts

If **YES**
- replace fuel pump relay

If 7 volts minimum is **NOT** obtained, check wiring as follows:
- partially withdraw electronic ignition control unit and pull harness connector from control unit
- measure continuity between ignition control unit harness connector and relay socket **10** using multimeter **US 1119**

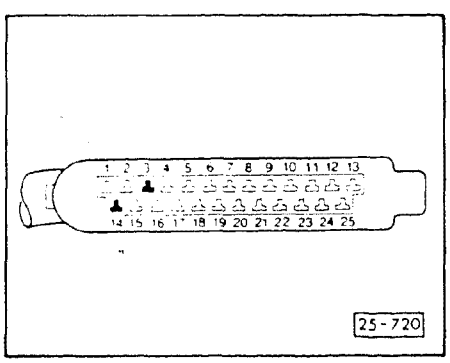

ignition control unit harness connector		relay socket **10**
terminal **3**	⟷	terminal **49**
terminal **14**	⟷	terminal **47**

- approximately 0.2 ohm

If **NO**
- repair break in wiring using wiring diagram

If **YES**
- replace knock sensor ignition control unit

cardiagn.com

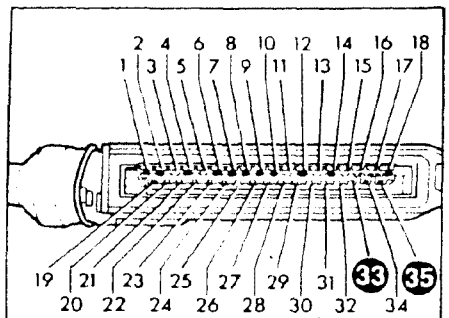

Harness connector fuel injection control unit 47-231

Air conditioning compressor clutch, on/off signal, checking

- disconnect fuel injection control unit harness connector from fuel injection control unit
- connect multimeter **US 1119** between terminals **33** and **35** (ground)
- with A/C in **OFF** position, switch ignition **ON**
  - 0 volts

If **NO**
- repair break in wiring using wiring diagram
- with A/C in **AUTO** or **BI-LEVEL** position switch ignition **ON**
  - A/C compressor clutch must become energized
  - approximately 12 volts

If specification is **NOT** obtained
- repair break in wiring using wiring diagram

cardiagn.com

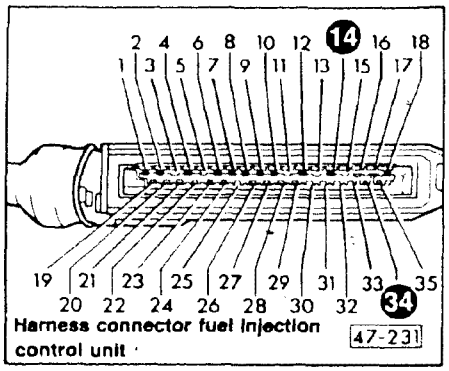

Harness connector fuel injection control unit

Idle stabilization system, shift mode signal, checking

- disconnect fuel injection control unit harness connector from fuel injection control unit
- connect LED tester **US 1115** between terminals **14** and **34**
- switch ignition **ON**

Vehicles with automatic transmission only

- engage selector lever first in Neutral and then in Park
  - **LED** tester **US 1115** must light up
- select any driving gear
  - **LED** tester **US 1115** must not light

If **NO**

- repair break in wiring according to wiring diagram

Vehicles with manual transmission only

- shift into any gear
  - **LED** tester **US 1115** must light up

If **NO**

- repair break in wiring according to wiring diagram

cardiagn.com

Coolant temperature sender, checking (Fault code 2312)

Check this first:

- coolant temperature over 20°C (176°F)

Note

Two temperature senders are installed in the coolant temperature sender housing. Both work independently, one for fuel injection and the other for electronic ignition.

If one temperature sender is bad, the entire temperature sender must be replaced.

The temperature sensor is an NTC (Negative Temperature Coefficient) type, meaning, resistance decreases as engine temperature increases.

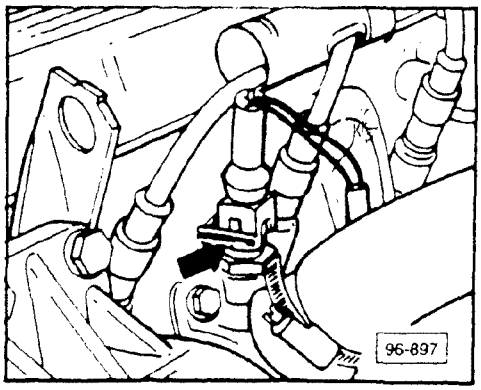

- remove harness connector from coolant temperature sender (**arrow**)

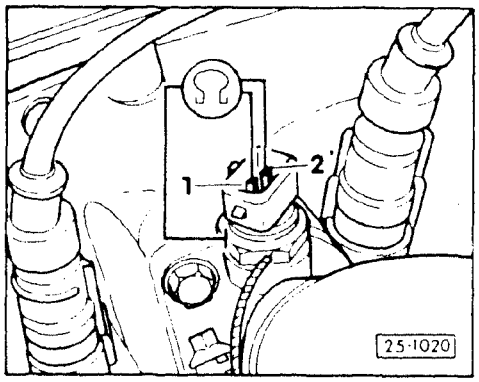

- connect multimeter **US 1119** between temperature sender terminal **1** and engine ground, then between terminal **2** and engine ground

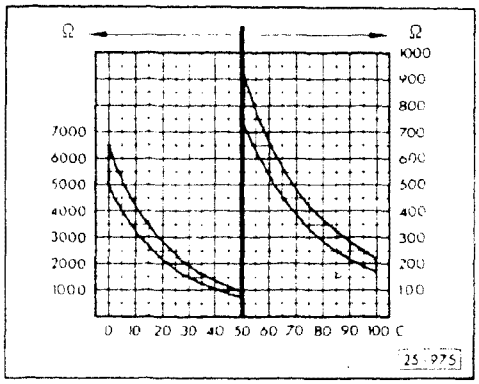

- see appropriate value on chart

cardiagn.com

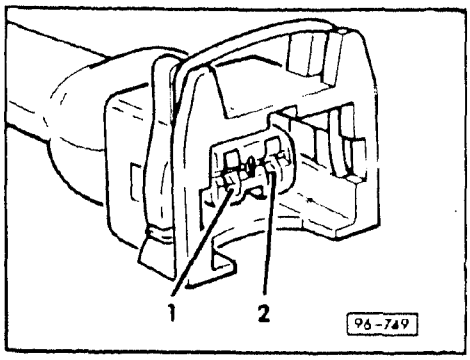

- connect multimeter **US 1119** between harness connector terminal **1** and ground then between terminal **2** and ground
- switch ignition **ON**
  - 4.5-5.5 volts

If **NO**

- repair break in wiring between control units and connectors, using wiring diagram

If voltage is **NOT** obtained and no break in wiring is found

- replace respective control unit

cardiagn.com

Altitude sensor, voltage supply checking (Fault code 2223)

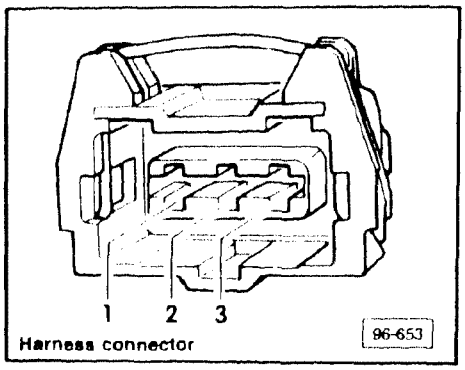

Harness connector

Note

Altitude sensor function cannot be tested, however, it is possible to check the voltage supply to the sensor.

The sensor is located in the A-pillar above the ignition control unit.

- remove harness connector from altitude sensor
- connect multimeter **US 1119** between harness connector terminal **1** and engine ground
- switch ignition **ON**
  - approximately 5 volts

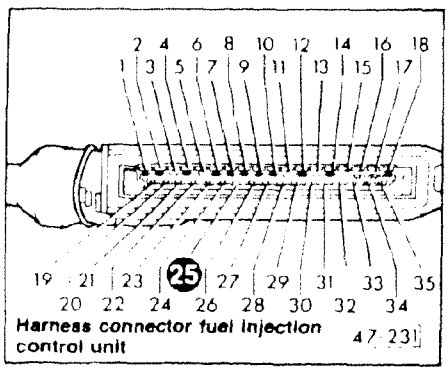

Harness connector fuel injection control unit

If **NO**

- repair break in wiring between terminal **1** of altitude sensor harness connector and terminal **25** of fuel injection control unit harness control
- connect multimeter **US 1119** between terminals **1** and **3** of altitude sensor harness connector and then between terminals **2** and **3**
- switch ignition **ON**
  - 4.5-5 volts

If **NO**

- repair break in wiring according to wiring diagram or replace fuel injection control unit
- check wiring between ignition control unit and altitude sensor according to wiring diagram

If all measurements **ARE** obtained

- replace altitude sensor

cardiagn.com

CONTINUED IN THE

BEGINNING OF NEXT ROW

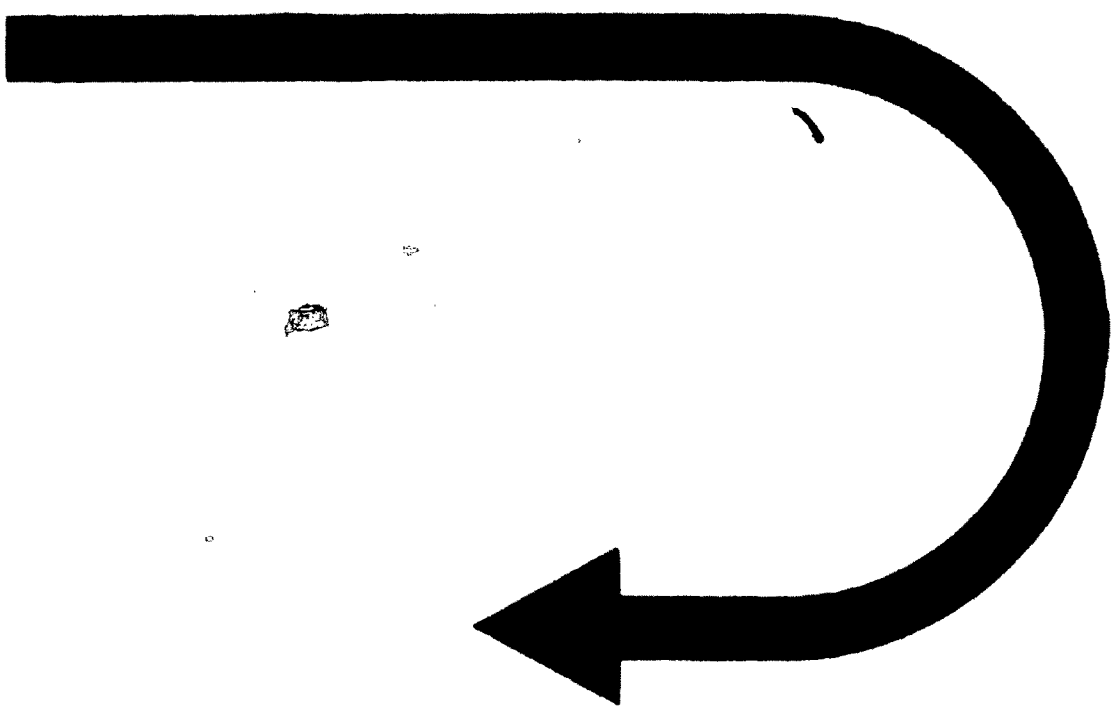

cardiagn.com

CAUTION

Idle speed, ignition timing and CO are inter-related and **MUST** be checked and adjusted **TOGETHER**.

Engine settings, checking

Preparations for checking/adjusting

Requirements

- engine oil temperature minimum 80°C (176°F)
- all electrical consumers switched **OFF**
- radiator cooling fan must **NOT** be running while checking or adjusting
- oxygen sensor connected
- A/C switched **OFF**
- no pressure measuring devices connected
- exhaust system must be tight and free of leaks
- OXS system **OK**

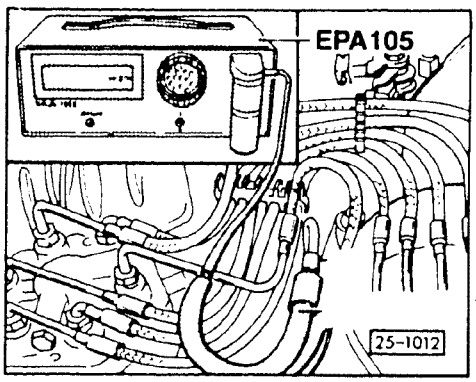

- remove cap from exhaust probe
- connect hose from exhaust gas analyzer (Sun 105 or EPA equivalent) to CO measuring tap (**arrow**)

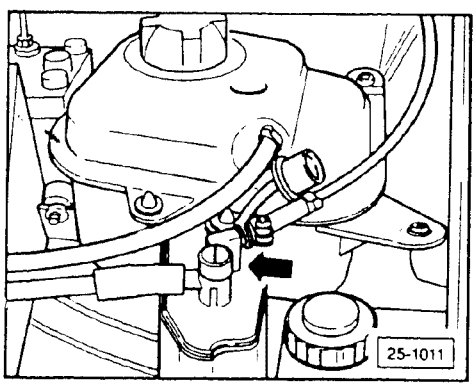

- remove cap (**shaded**) from carbon canister (**arrow**)

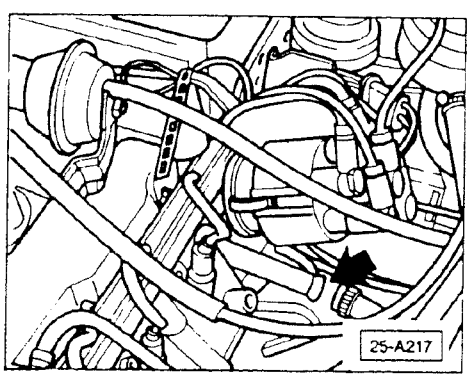

- remove crankcase breather connection at steel pipe
- plug opening of steel pipe (**arrow**)

Note

Crankcase vapors must vent to atmosphere during checking or adjusting procedure.

cardiagn.com

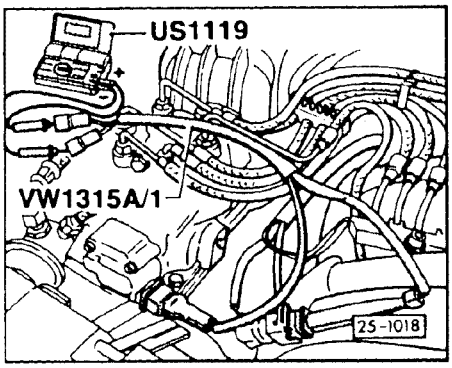

- connect multimeter **US 1119** or equivalent to differential pressure regulator with adaptor **VW 1315 A/1**
- set scale to 200 mA DC

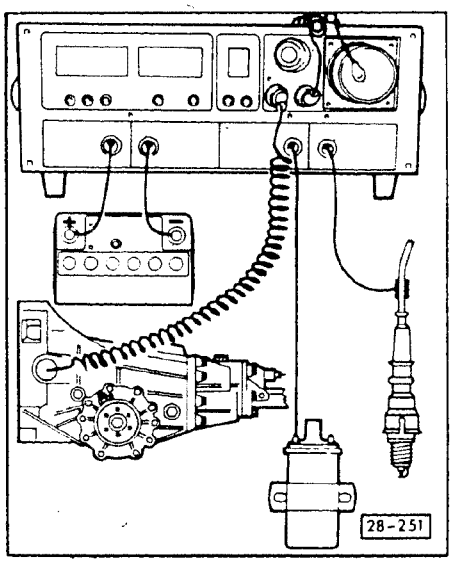

- connect **VW 1367** engine tester to check ignition timing and idle speed
- start engine and run to normal operating temperature (radiator fan must come on at least once)

Note

If you loosen or replace the injector lines, run the engine to about 3000 RPM for several minutes to bleed injectors and lines.

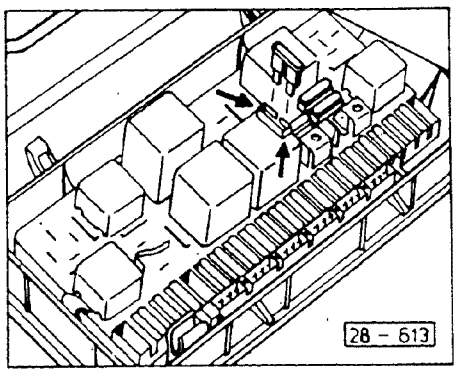

Settings, checking

- insert fuse in top of fuel pump relay (**arrow**)
  - indicator light must come on. This indicates that after four seconds, ignition timing is stabilized for testing purposes.
- check ignition timing
  - 13° to 17° Before TDC

If **NO**

- adjust ignition timing to: 15° ± 1° Before TDC
  For details see Repair Group 28

cardiagn.com

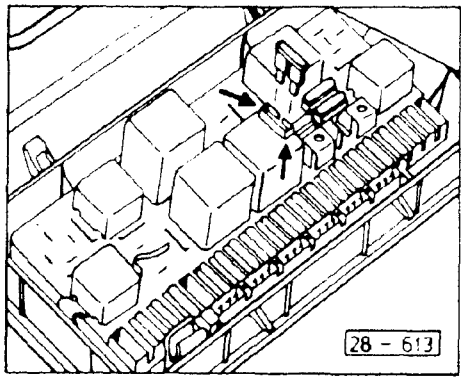

- remove fuse from fuel pump relay and briefly raise engine speed above 2500 RPM to cancel fault display
- check idle speed
  - 790 ± 70 RPM

Note

The idle speed is **NOT** adjustable (idle speed control is obtained through the idle stabilization system). The idle air bypass screw should be turned in fully against its seat.

- if idle speed is out of this range, check for an engine problem such as vacuum leaks, etc.

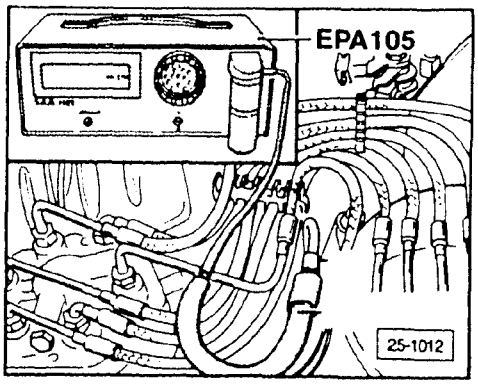

- check differential pressure regulator current with oxygen sensor **connected**
  - 0 ± 1 mA

If **NO**
- adjust to –1 to +1mA

- check CO%
  - 0.3% to 1.2%

Note

Vehicles with air conditioning only:
If the idle speed should drop severely when the air conditioner is switched **ON**, check the idle stabilization system, section 25-370

Note

If injection lines were disengaged or replaced, the engine speed must be raised to 3000 RPM several times then left idling for at least 2 minutes before adjustment. The idle speed is automatically regulated by the idle stabilization valve.

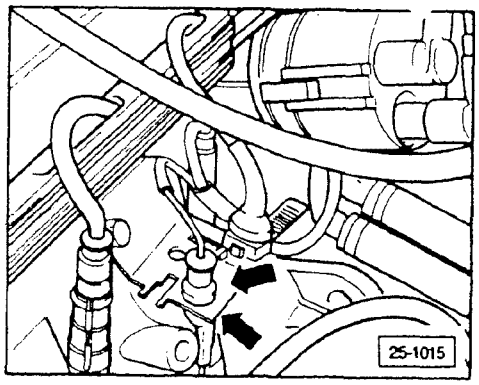

- disconnect oxygen sensor harness connector (**arrows**)
- check CO-value, if necessary adjust with CO-adjustment screw, section 25-440
  - checking value: 0.3-3.0 vol. %
    adjustment value: 0.6-1.0 vol. %

cardiagn.com

If the CO value is less than 0.3 or more than 3.0% volume when the oxygen sensor is disconnected, adjust the CO as follows:

- switch ignition **OFF**
- remove rubber boot from mixture control unit
- **LIGHTLY** center punch mixture adjusting screw plug
- drill 2.5 mm (3/32 in) hole in center of plug approximately 3.5 to 4.0 mm (9/64 to 5/32 in) deep

CAUTION

Clean up any metal shavings. Apply grease to drill bit to catch loose shavings.

- screw in 3 mm (1/8 in) sheet metal screw
- remove plug/screw, using pliers
- reinstall rubber boot
- start engine and run at idle

CAUTION

When adjusting do **NOT** push adjustment wrench down or accelerate engine with adjusting tool in place. Remove the tool after each adjustment and briefly accelerate engine before reading CO value.

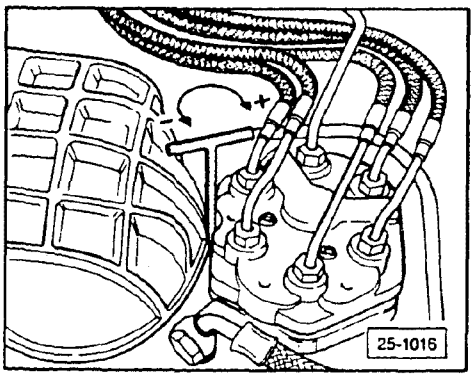

- adjust CO by turning mixture adjusting screw using tool **P377**
  - counter-clockwise: CO value decreases
    clockwise: CO value increases

Note

After adjusting, the hoses for the crankcase must be reconnected. If the control current and the CO content change, this is not due to an improper adjustment, but rather to oil dilution caused by short distance driving. With long distance drives, the amount of fuel in the oil will be reduced and the CO value will normalize again. A short term solution would be an oil change.

After adjusting, the specified value must fluctuate with the oxygen sensor connected.

If **NO**

- check the oxygen sensor, section 25-310

cardiagn.com

CAUTION

Idle speed, ignition timing and CO are inter-related and **MUST** be checked and adjusted **TOGETHER**.

Engine settings, checking

Preparations for checking/adjusting

Note

Until 2-88 the throttle bypass screw was installed in a fully seated position and then sealed with safety paint.

Beginning 3-88 the throttle bypass screw is no longer installed.

Check these first:

- engine oil temperature 80°C (176°F) minimum
- all electrical consumers switched **OFF**
- radiator fan must **NOT** be running during checking or adjusting
- A/C switched **OFF**
- do **NOT** have any pressure measuring devices connected
- if injection lines were loosened or replaced, raise engine to 3000 RPM's several times then let idle for at least two minutes before making adjustments
- exhaust system **MUST** be tight and free of leakage
- oxygen sensor control system **OK**
- ignition timing adjustment **OK**

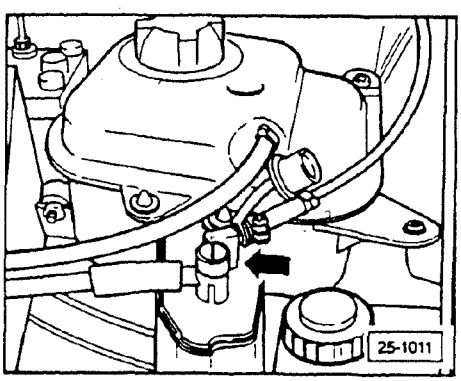

▶ ■ remove cap from carbon canister (**arrow**)

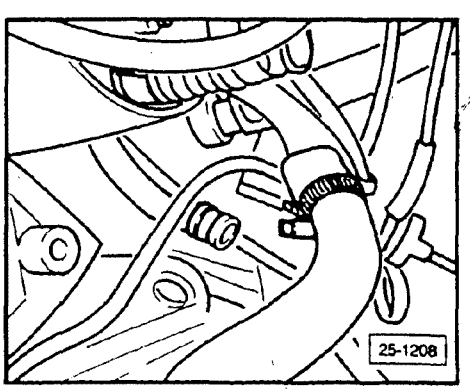

▶ ■ remove crankcase housing ventilation hose
■ install plug in metal tube

cardiagn.com

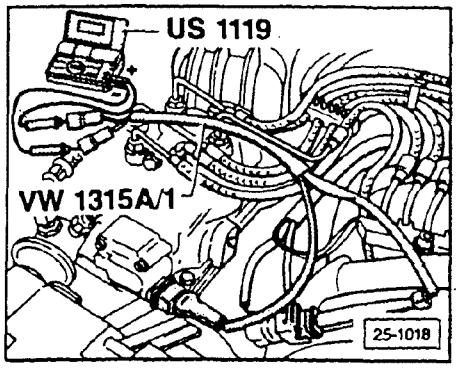

- remove harness connector from differential pressure regulator
- connect test adaptor **VW 1315 A/1 between** differential pressure regulator and its harness connector
- switch multimeter **US 1119** to 200 mA range

- remove cap from CO tap tube
- connect **SUN 105** CO tester according to manufacturer's instructions

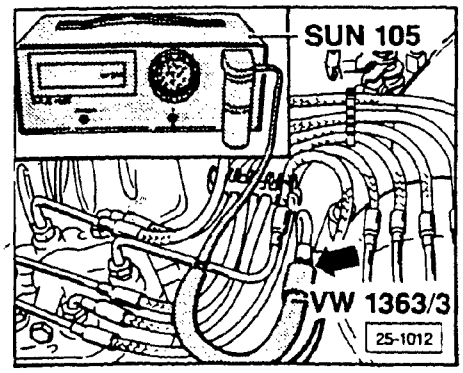

Note

Hose must fit securely over the CO tap tube (**arrow**), so there is no exhaust leakage.

- start engine and let idle

Note

The following procedure tests the function of the deceleration fuel shut off and the idle switch.

- briefly raise engine speed to approximately 4000 RPM
- snap throttle shut
  - multimeter **MUST** indicate negative 50-60 mA for a short time

If reading indicates positive 50-60 mA:
- reverse meter connections

If **NO** value is indicated
- check idle switch
  see section 25-270

Workshops over 1000 meters (3280 feet) of elevation: see page 25.63a

Workshops between sea level and 1000 meters (between 0 and 3280 feet) of elevation:

- checking: 0 ± 3 mA

Co value as indicated on the **SUN 105** CO tester must be
- 0.3 to 1.2 volume %

cardiagn.com

If **NO**

- turn **OFF** ignition
- remove intake air boot from mixture control unit
- **LIGHTLY** center punch mixture adjusting screw plug
- drill 2.5 mm (3/32 in.) hole in center of plug to a depth of 3.5 to 4.0 mm (9/64 to 5/32 in.)

> **CAUTION**
>
> Clean up any metal shavings. Apply grease to drill bit to catch any shavings.

- screw in 3 mm (1/8 in.) sheet metal screw
- remove plug with screw, using pliers
- start engine and run at idle

> **CAUTION**
>
> When adjusting do **NOT** push adjustment wrench down or accelerate engine with adjusting tool in place. Remove tool after each adjustment and briefly accelerate engine before reading the CO value.

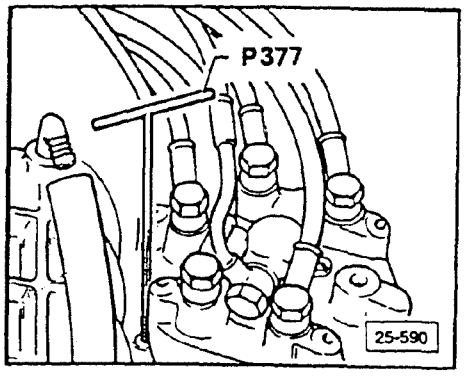

- adjust CO by turning mixture adjusting screw with tool **P377**
  - adjusting value: 0 ± 1 mA

Workshops above 1000 meters (3280 feet) of elevation:

- disconnect oxygen sensor harness connector (green wire)
- let engine idle
  - record mA value of differential pressure regulator current

Note

The value obtained with the oxygen sensor disconnected is the altitude correction factor.

- reconnect oxygen sensor harness connector (green wire)
  - note mA value and compare with the value obtained with the sensor disconnected

cardiagn.com

If the difference between readings is **more** than ± 3 mA; adjust as follows:

- turn **OFF** ignition
- remove intake air boot from mixture control unit
- **LIGHTLY** center punch mixture adjusting screw plug
- drill 2.5 mm (3/32 in.) hole in center of plug to a depth of 3.5 to 4.0 mm (9/64 to 5/32 in.)

> **CAUTION**
>
> Clean up any metal shavings. Apply grease to drill bit to catch any shavings.

- screw in 3 mm dia. (1/8 in.) sheet metal screw
- remove plug with screw, using pliers
- start engine and run at idle

> **CAUTION**
>
> When adjusting do **NOT** push adjustment wrench down or accelerate engine with adjusting tool in place. Remove tool after each adjustment and briefly accelerate engine before reading the CO value.

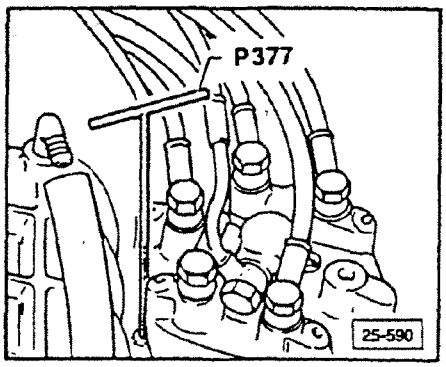

- ensure that oxygen sensor has been re-connected and that mA current is fluctuating slightly

- adjust CO by turning mixture adjusting screw with tool **P377**
  - adjusting value: ± 1 mA of reading taken while oxygen sensor was disconnected

Example:

If the reading with the oxygen sensor disconnected was 4 mA and the reading with the oxygen sensor connected was 0 mA the difference would be 4 thus requiring an adjustment.

You would then make an adjustment of 4 ± 1 mA (**WITH** the oxygen sensor **CONNECTED**).

cardiagn.com

Index

4-cylinder

CIS-E Motronic system
- component layout 28-10

Engine settings
- checking/adjusting 28-90

Hall sensor
- checking 28-70

Ignition coil
- checking 28-60

Ignition distributor
- installing 28-80
- rotor, checking 28-40
- trigger wheel, removing/installing 28-50

Ignition system and spark plugs
- technical data 28-20

Ignition wires and connectors
- checking 28-40

System precautions
- rules of cleanliness 28-30

5-cylinder

CIS-E III system
- component layout 28-100

Engine settings
- checking/adjusting 28-180

Hall sensor
- checking 28-160

Ignition coil
- checking 28-170

Ignition distributor
- installing 28-150
- rotor, checking 28-140
- settings 28-110

Ignition wires and connectors
- checking 28-130

cardiagn.com

CIS-E Motronic ignition system

Engine code 3A

Note

Only the ignition portion of the CIS-E Motronic system is described in this Repair Group. Fuel injection and electrical testing of the CIS-E Motronic is handled in Repair Group 25.

- Note system precautions section 28-30
- See Repair Group D2 for information regarding self-diagnosis.

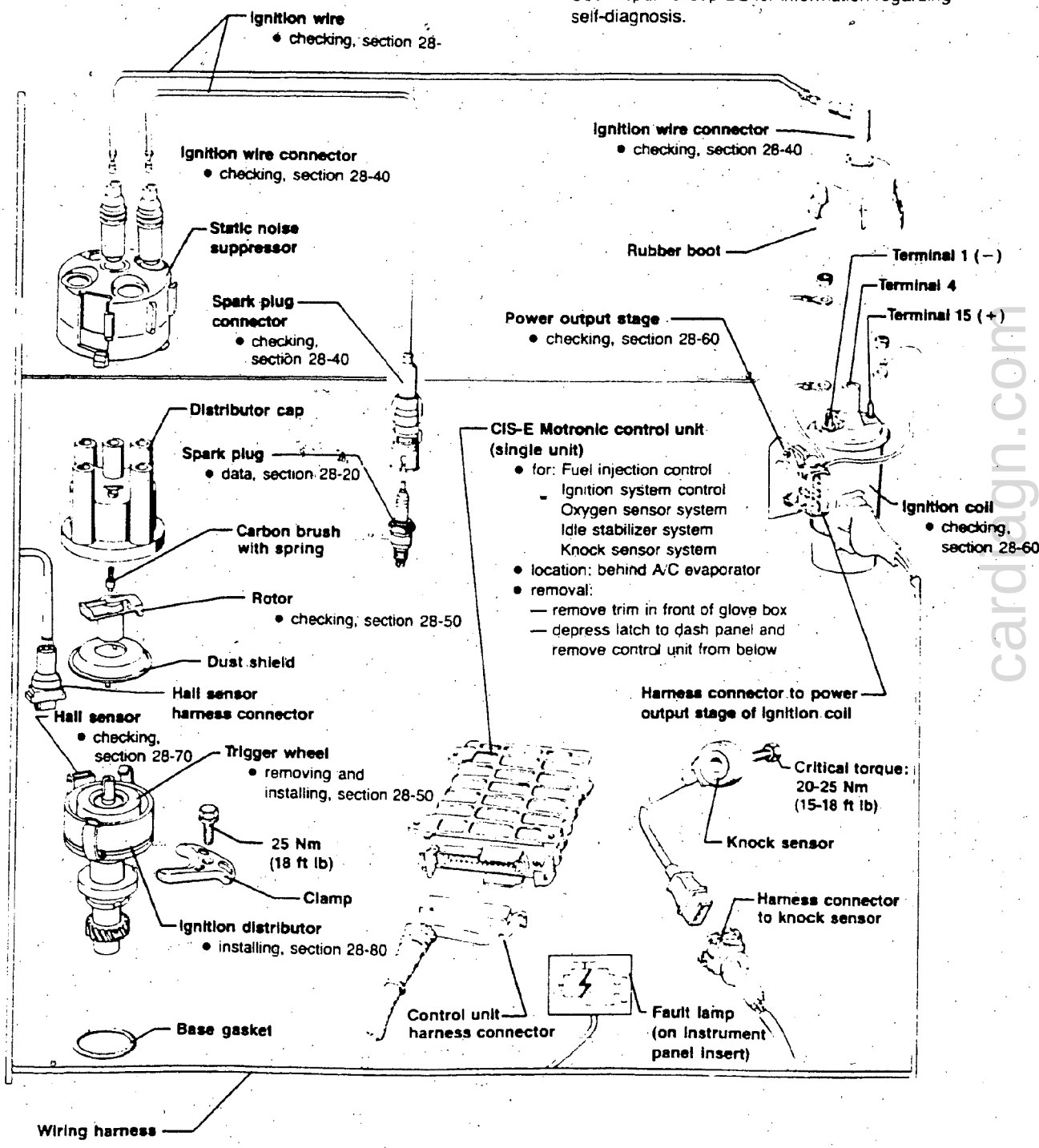

cardiagn.com

Tuneup specifications
From 1988

Engine code		3A
Type fuel/ignition system		CIS-E Motronic
CIS-E Motronic (combined fuel/ignition)		893 907 404
Ignition distributor		053 905 205A
RPM cutoff (upper limit) (via CIS-E Motronic control unit)		6400 ± 100 RPM
Ignition timing	checking value	4° - 8° Before TDC
	adjusting value	6° ± 1° Before TDC see idle adjustment, Group 25
Firing order		cylinders 1-3-4-2
Spark plugs	Bosch	W7DTC
	electrode gap mm (in.)	0.8 ± 0.1 (0.031 ± 0.004)
	tightening torque Nm (ft lb)	20Nm (15 ft lb)
Idle RPM (**NOT** adjustable, controlled by idle stabilization system)		840 ± 60
CO-content (measured at CO tap with oxygen sensor connected)		0.3 - 1.2 vol % Adjustment performed via differential pressure regulator control current adjustment.

CAUTION

Part numbers are for reference only. Always consult with the Parts Department for the latest information.

CAUTION

Idle speed, ignition timing and CO are interrelated and **must** be checked and adjusted together.

cardiagn.com

CIS-E Motronic system precautions

CAUTION

Be alert when you work on the engine. High voltage can injure you and damage sensitive components.

Turn ignition off:

- when connecting or disconnecting tester leads to ignition system
- when connecting or disconnecting ignition wires
- when washing the engine

Don't forget about the battery:

- do not disconnect battery when engine is running
- for emergency starting use fast charge for 15 seconds only and not more than 16.5 volts
- disconnect battery and CIS-E Motronic control unit when using arc, spot, or electrical welding equipment

When testing the system:

- do not apply voltage to control unit to simulate output signals
- when coil wire (terminal 4) is disconnected from distributor, always ground using jumper wire
- do not crank engine with high tension wire disconnected and un-grounded (example: compression test)

When applying heat:

- if components are heated above 80°C (175°F) from paint dryer or steam cleaner, wait for components to cool before starting engine

When towing:

- vehicles with ignition problems (or where problems may be suspected) must have the power output stage of the ignition coil disconnected

Rules of cleanliness

CAUTION

First:

- clean connecting points before loosening

When fuel system is open

- do not use compressed air if you don't need it
- move vehicle only if you must
- if you cannot finish repair, carefully cover exposed parts with plastic or paper — not with rags

Use clean parts only

- do not unwrap new parts before needed
- only use new parts, not loose or unwrapped parts from tool box
- lay removed parts on clean surface. Cover with plastic or paper — not with rags

cardiagn.com

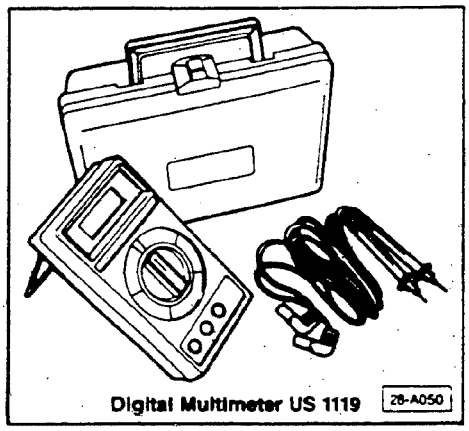

Digital Multimeter US 1119

Ignition wires and connectors, checking

Use multimeter **US 1119** for the following measurements.

Connect the tester according to the manufacturer's instructions.

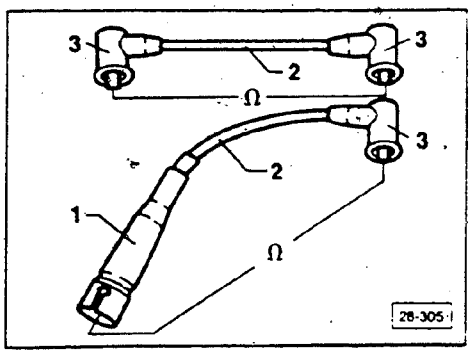

- check ignition wires **2** for continuity
- check ignition wires **2**:
  - between coil and distributor
    with radio: **2000 ± 800 ohms**
    without radio: **0 ohms**
  - between distributor and spark plug
    with radio: **6000 ± 1400 ohms**
    without radio: **1000 ± 400 ohms**
  - if not within range go to next check

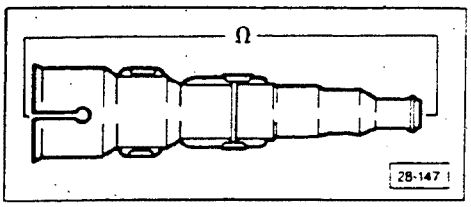

- check spark plug connector **1**
  - with radio (suppressed):
    5000 ± 1000 ohms
  - without radio (not suppressed):
    1000 ± 400 ohms

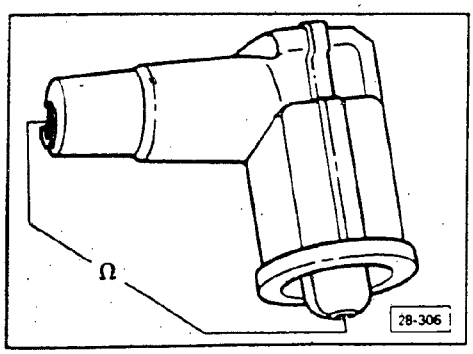

- check connector/suppressor **3**
  - resistance: **1000 ± 400 ohms**

If the specified values are **NOT** obtained after performing these checks:
- replace the faulty wire or connector

cardiagn.com

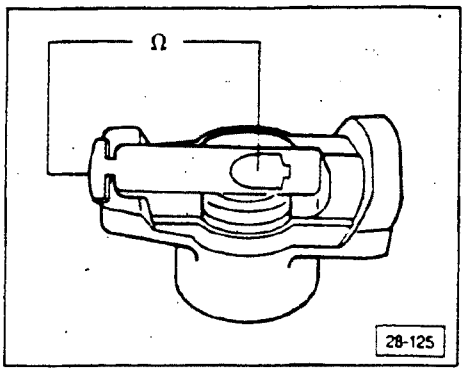

Distributor rotor, checking

- measure electrical resistance of distributor rotor
  - resistance: 1000 ± 400 ohms

Note

Rotor must be marked with **R** 1 (for Hall generator equipped cars).

cardiagn.com

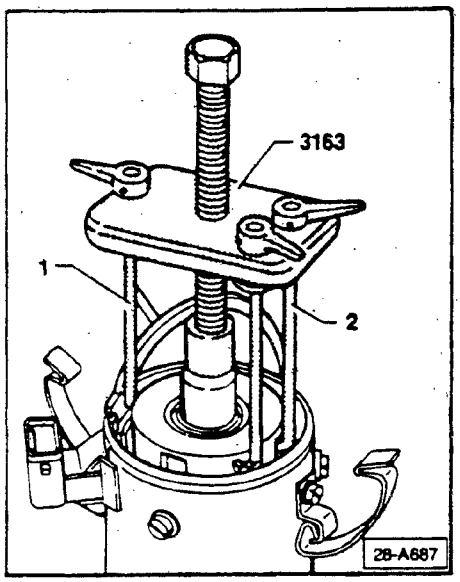

Ignition distributor trigger wheel removing and installing

- remove circlip on top of trigger wheel
- install hooks **1** and **2** as shown
- center **3163** tensioning bolt on top of distributor shaft
- slowly tighten bolt and withdraw trigger wheel

Note

A pin is used to position the trigger wheel, which can become dislodged during removal. Be careful not to drop it into the distributor.

cardiagn.com

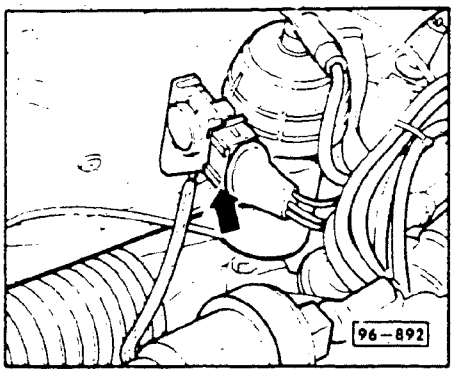

Ignition coil, checking

- check wiring between power stage and ignition coil and ground wire between power stage and engine for corrosion or damage
- disconnect ignition coil power stage (**arrow**)

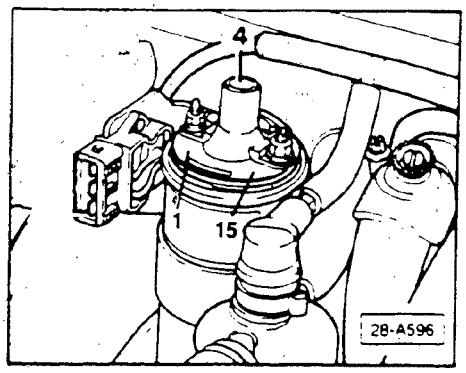

Secondary resistance, checking

- connect multimeter **US 1119** between terminals **1** and **4**
  - 5000 to 9000 ohms

If **NO**
- replace ignition coil

Primary resistance, checking

- connect multimeter **US 1119** between terminals **1** and **15** of ignition coil
  - 0.5-1.5 ohms

If **NO**
- replace ignition coil

If all specified values are obtained and the engine still does not run (no ignition impulse)

- replace ignition coil complete with power stage

> **CAUTION**
>
> The function of the power stage is **NOT** to be tested.

cardiagn.com

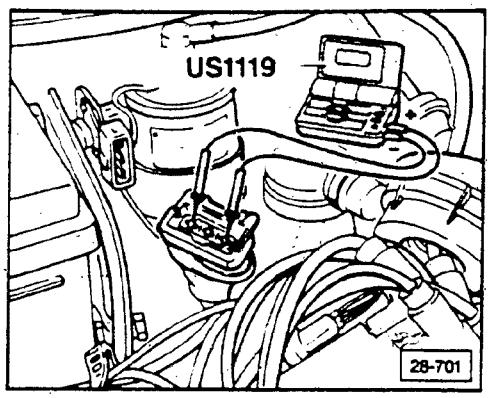

Ignition coil, power output stage, checking

Requirement:
- ignition coil **OK** (checking, section 28-60)

Voltage supply, checking

- remove harness connector from power output stage
- switch multimeter **US1119** to 20 volt range and connect to terminal **1** and terminal **3** of disconnected harness connector
- switch **ON** ignition
  - approximately battery voltage

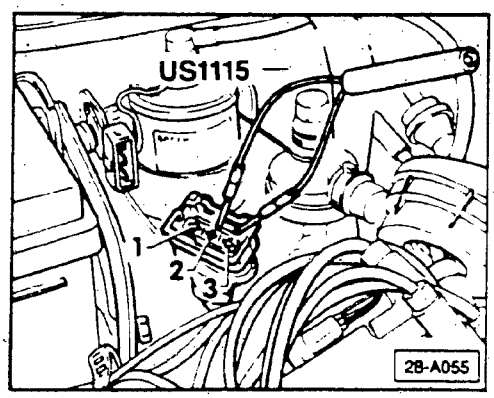

If **NO**
- repair break in wiring using wiring diagram
- connect **LED** tester **US1115** to terminals **2** and **3** of harness connector
- activate starter and check for signal from Hall sensor
  - **US1115** must flicker

If **NO**
- check Hall sensor, section 28-70

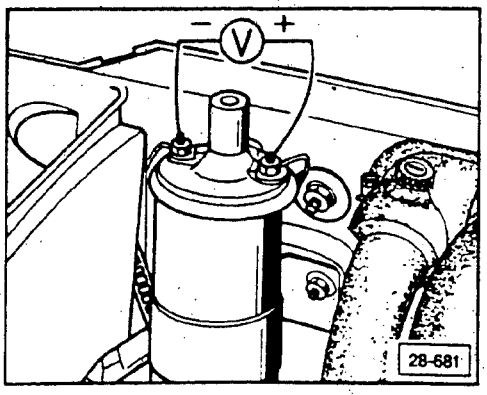

- shut **OFF** ignition
- reconnect harness connector to power output stage of coil
- remove harness connector from Hall sensor on distributor

- connect multimeter to terminal **1** (–) and terminal **15** (+) of ignition coil
- switch **ON** ignition

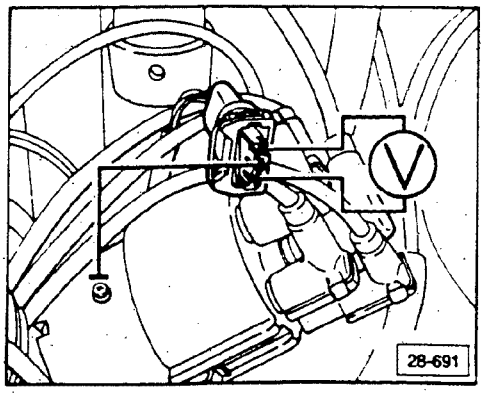

- briefly touch center wire from disconnected Hall sensor harness connector to ground
  - indicated voltage must increase to 2 volts minimum and after 1 to 2 seconds drop to zero volts

If the voltage does **NOT** drop:
- temporarily substitute a new power output stage and check previous step again, also inspect top of coil for leakage
- if necessary replace coil assembly, complete with power output stage

cardiagn.com

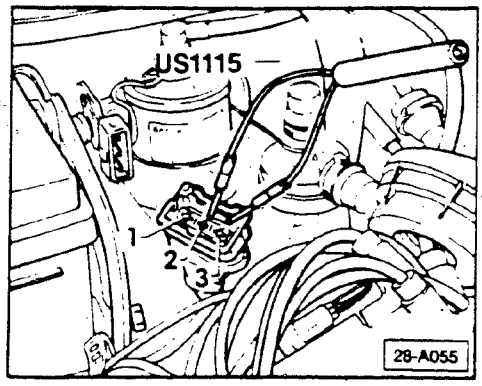

Hall sensor, checking

Note

Checking is necessary only if ignition spark is **NOT** present.

- remove harness connector from power output stage of ignition coil and connect LED tester **US1115** to terminals **2** and **3**
- actuate starter and check signal from Hall sensor
  - **US1115 must** flicker

If the **US1115** flickers, Hall sensor is **OK** and test is ended.

If **NO**; continue

- remove harness connector from Hall sensor on distributor
- switch multimeter **US 1119** to 20 volt range

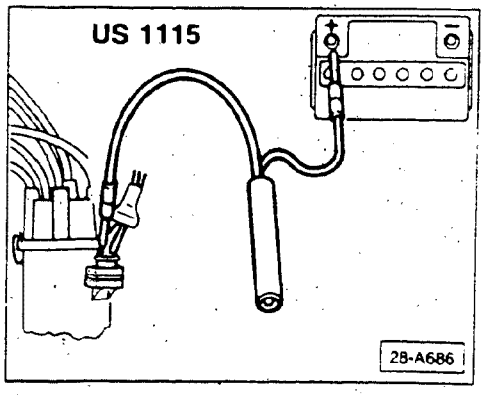

- connect multimeter to outer connections of harness connector and with ignition switched **ON**, check voltage supply for Hall sensor from CIS-E Motronic control unit
  - 9 volt minimum
- remove rubber boot from harness connector for Hall sensor and re-connect to Hall sensor connection on distributor
- connect LED tester **US1115** to center wire of harness connector for Hall sensor and to battery plus (+)
- activate starter and check signal from Hall sensor
  - if the light diode flickers, the Hall sensor is **OK**

If **NO**
- Hall sensor is defective

  or
- CIS-E Motronic control unit is defective
- replace as necessary

cardiagn.com

Ignition distributor, installing

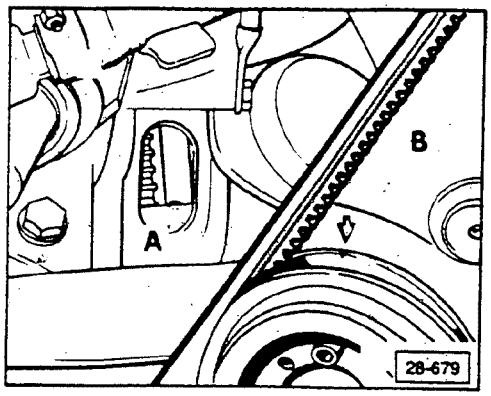

A — with engine installed

- set flywheel to TDC — Cylinder 1

B — with engine removed

- align marking on vibration damper (pulley) with marking on belt cover

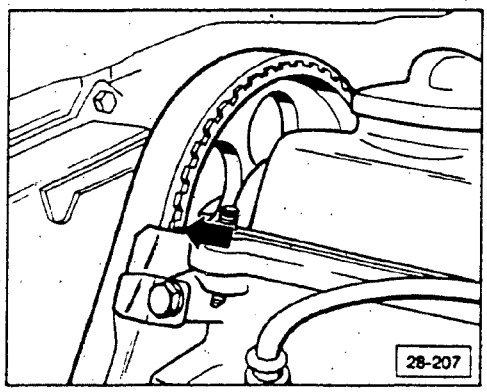

- align marking on camshaft sprocket with cylinder head cover (**arrow**)

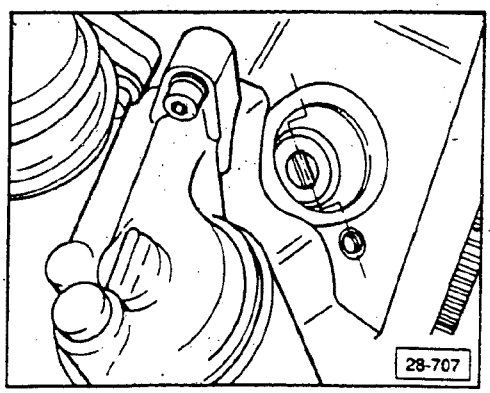

- adjust so the drive lug slot aligns with threaded hole

Note

The distributor clamp bolt head is covered with a "tamper-proof" seal which **must** be replaced if the distributor is loosened for any reason.

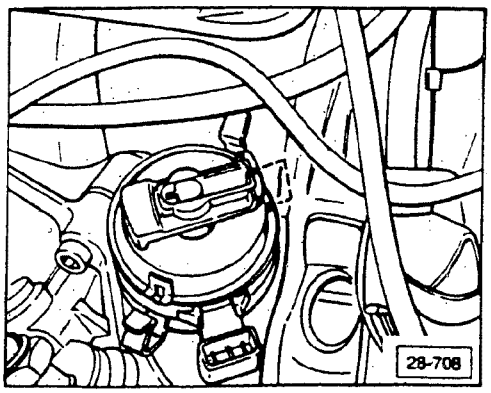

- install distributor so that the distributor rotor points to marking for cylinder 1 on distributor housing
- clean distributor cap before installing, check for cracks and carbon tracks due to arcing, replace if necessary
- adjust ignition timing — see section 28-90
- tighten distributor clamp bolt
  - 25 Nm (18 ft lb)
- install new "tamper-proof" seal on distributor clamp bolt

cardiagn.com

Engine settings

Note

Always activate fault memory before checking engine settings, see Repair Group D2 for additional information.

If **no** faults are stored

- check ignition timing, idle speed (not adjustable) and CO content, using the procedures in this section.

Requirements:

- engine-oil 80°C (176°F) minimum
- all electrical consumers switched **OFF**
- radiator fan must **NOT** be running during checking or adjustments
- A/C switched **OFF**
- disconnect any pressure measuring devices
- if any injection lines were loosened or replaced, raise the engine speed above 3000 RPM several times and let idle for at least two minutes
- exhaust system must not leak
- oxygen sensor control **OK**

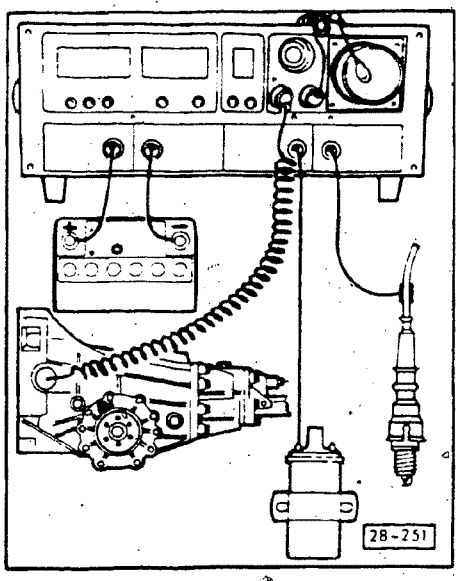

Preparations for checking

- **switch OFF** ignition
- connect engine tester **VW1367** for ignition timing and RPM display

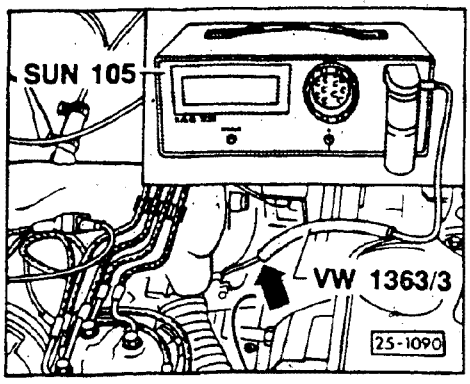

- connect CO tester **SUN 105** (or EPA equivalent) using adapter **VW1363/3** on CO measuring tube

Note

Hose must fit snugly on CO-measuring tube to minimize measurement errors.

cardiagn.com

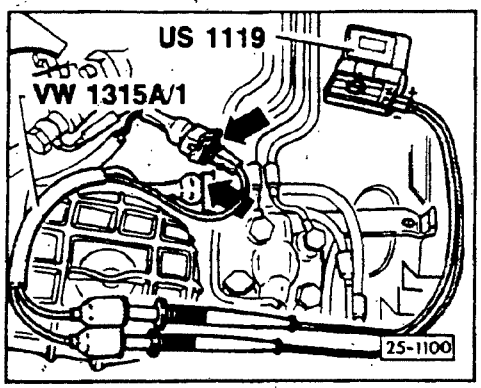

- connect multimeter **US1119** and test adapter **1315A/1** to differential pressure regulator
- switch **ON** ignition
  - control current must indicate positive (+)

If **NO**
- reverse the test probes

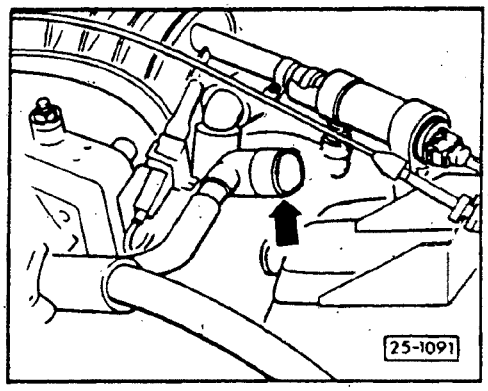

- remove crankcase housing breather hose from cylinder head cover and vent it to atmosphere
- remove crankcase housing breather hose from breather housing (cylinder block), and vent to atmosphere

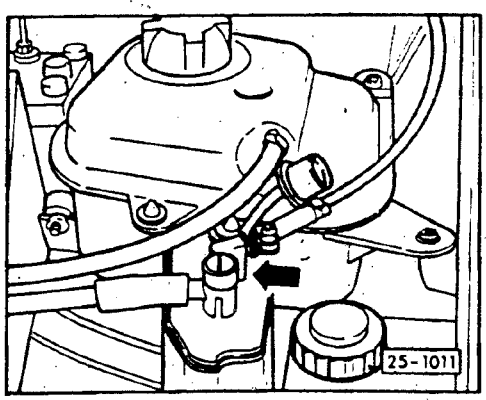

- remove sealing cap (**shaded**) from charcoal canister

cardiagn.com

CAUTION

Ignition timing, idle speed and CO are inter-related and **MUST** be checked and adjusted **TOGETHER**.

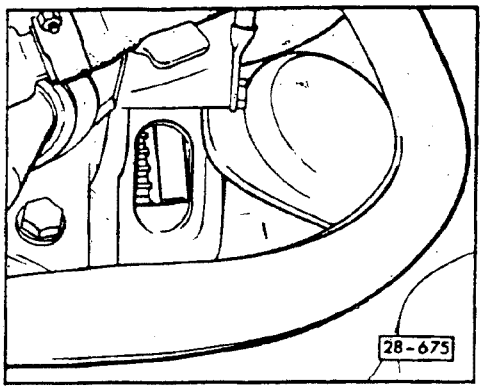

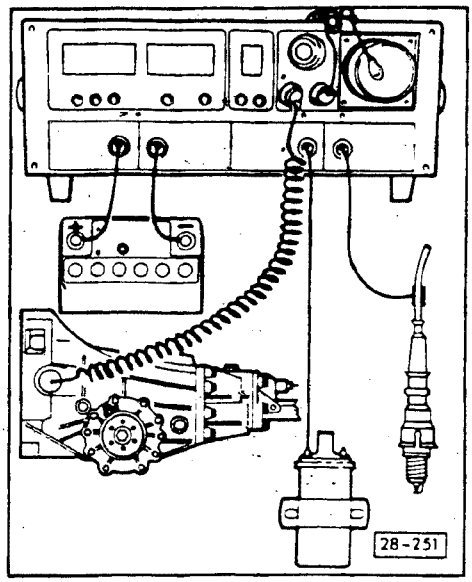

Ignition timing, checking and adjusting

- start engine and let idle
- check ignition timing, timing point will be displayed directly on engine tester **VW1367** or use strobe light method

Ignition timing mark (on flywheel) for use with stroboscope method of checking

- checking value: 4° to 8° Before TDC
- adjusting value: 6° ± 1° Before TDC

- adjust if necessary

Note

To loosen the distributor, remove the tamper proof seal (cap) covering the distributor clamp bolt. When you have finished making adjustments and have re-torqued the bolt (18 ft lb), install a new seal.

Idle speed checking, NOT adjustable

Read idle RPM directly on **VW1367**

- start engine and let idle
  - engine speed must be 780-900 RPM

If **NO**
- check intake air system for leaks
- check airflow sensor potentiometer, adjust if necessary

- switch **ON** A/C
  - idle speed must increase by approximately 70 RPM

If **NO**
- perform electrical check, see Repair Group 25 page 25.112

cardiagn.com

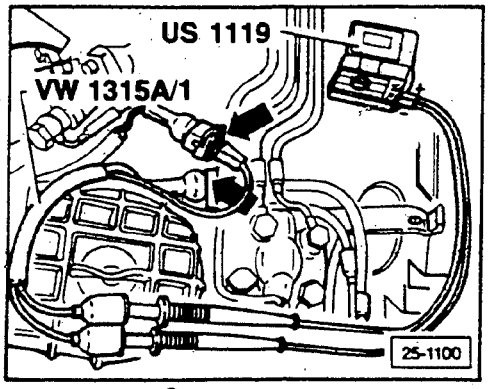

CO, checking and adjusting

(primary check)

- check the CO content by reading mA output on **US1119** multimeter
  - 0 to 5 mA (**must** fluctuate)

If **NO**, or does **NOT** fluctuate

- check the oxygen sensor control system, page 25.86 (group 25)

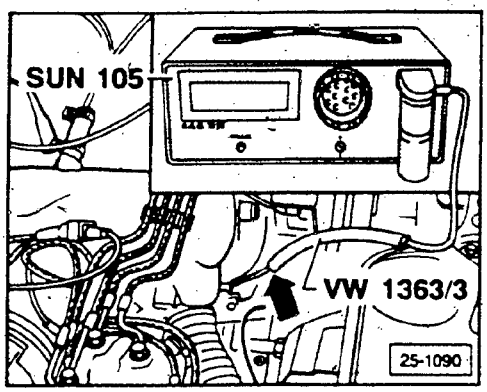

(secondary check)

- read CO content directly on **SUN 105** (or EPA equivalent)
  - 0.2 to 1.2% by volume

If flash codes **2343** or **2344** were stored or the CO content is outside of the tolerance range; adjust CO content as follows:

- switch **OFF** ignition
- remove rubber boot from mixture control unit

CAUTION

Do not press down on the adjustment wrench during adjustment, do not accelerate the engine with the adjustment tool in place. Remove the tool after each adjustment and briefly accelerate the engine before reading the CO value.

- **lightly** center punch mixture adjusting screw plug
- drill 2.5 mm (3/32 in) hole in center of plug approximately 3.5 to 4.0 mm (9/64 to 5/32 in) deep
- screw in 3 mm (1/8 in) sheet metal screw

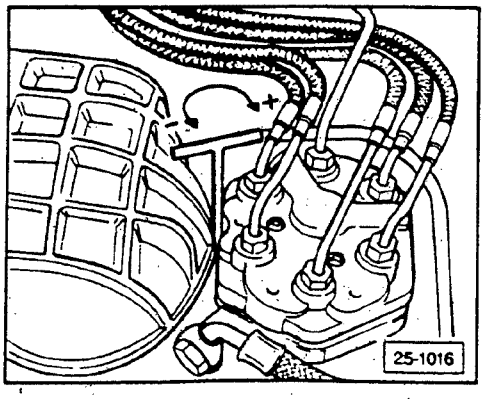

- remove plug/screw, using pliers
- reinstall rubber boot
- start engine, repeat primary and secondary CO checks, adjust as follows
  - turning clockwise: CO increases
  - turning counterclockwise: CO decreases
- when primary and secondary CO adjustment specifications have been obtained, install new plug in CO adjustment hole

cardiagn.com

Engine code letters NG

Note

Check the ignition timing if you replace the control unit, adjust the timing if necessary.

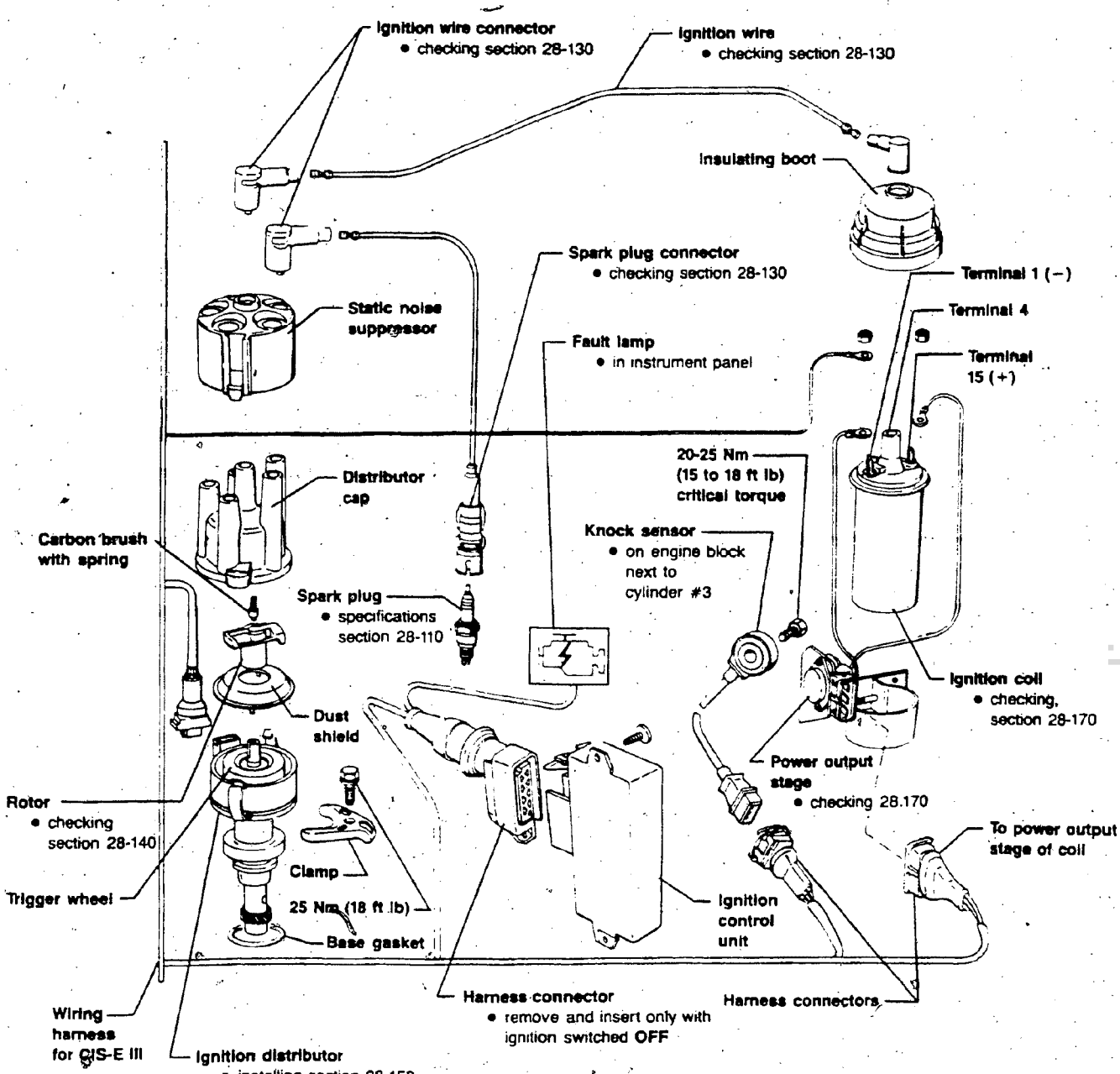

Note

Before you can begin troubleshooting or making repairs, activate the fault memory system. See Repair Group D2 for additional information.

28-705

cardiagn.com

Tuneup specifications
From 1988 m.y.

Engine code		NG
Introduction date		8-87
~~Fuel injection control unit~~	~~49 states**~~	~~443 906 264 C~~
	~~California**~~	~~443 906 264 B~~
~~Ignition control unit~~	~~49 states**~~	~~443 907 397 C~~
	~~California**~~	~~443 907 397 E~~
~~Ignition distributor~~		~~034 905 205 H~~
RPM cutoff (upper limit) (via CIS-E III control unit)		6600 ± 100 RPM
Ignition timing	checking value	13-17° Before TDC
	adjusting value	15 ± 1° Before TDC
Timing mark location: ON flywheel		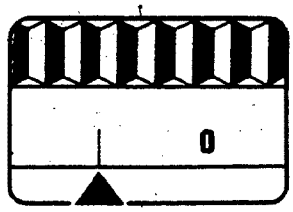 28-400
Firing order		1-2-4-5-3
Spark plugs	Bosch	W7DTC
	electrode gap mm (in.)	0.8 ± 0.1 (0.031 ± 0.004)
	tightening torque Nm (ft lb)	20Nm (15 ft lb)
Idle RPM*	manual transmission RPM	790 ± 70
	automatic transmission RPM	790 ± 70
CO-content (oxygen sensor probe disconnected)	checking value	0.3-3.0 vol. %
	adjusting value	0.6-1.0 vol. %

*Idle speed can **NOT** be adjusted using air screw on throttle body, idle is regulated by CIS-E III idle stabilization system.
**Do not mix 49 states control units with California control units or vise versa.

CAUTION

Part numbers are for reference only. Always consult with the Parts Department for the latest information.

CAUTION

Idle speed, ignition timing and CO are interrelated and **must** be checked and adjusted together.

cardiagn.com

CIS-E III system precautions

CAUTION

Be alert when you work on the engine. High voltage can injure you and damage components.

Turn ignition off:

- when connecting or disconnecting tester leads to ignition system
- when connecting or disconnecting ignition wires
- when washing the engine

Don't forget about the battery:

- do not disconnect battery when engine is running
- for emergency starting use fast charge for 15 seconds only and not more than 16.5 volts
- disconnect battery when using arc, spot, or electrical welding equipment

When testing the system:

- do not apply voltage to control unit to simulate output signals
- when coil wire (terminal 4) is disconnected from distributor, always ground using jumper wire
- with high tension wire disconnected do not crank engine (example: compression test)

When applying heat:

- if components are heated above 80°C (175°F) from paint dryer or steam cleaner, wait for components to cool before starting engine

Rules of cleanliness

CAUTION

First:

- clean connecting points before loosening

When fuel system is open

- do not use compressed air if you don't need it
- move vehicle only if you must
- if you cannot finish repair carefully cover parts with plastic or paper — not with rags

Use clean parts only

- do not unwrap new parts before needed
- only use new parts, not loose or unwrapped parts from tool box
- lay removed parts on clean surface. Cover with plastic or paper — not with rags

cardiagn.com

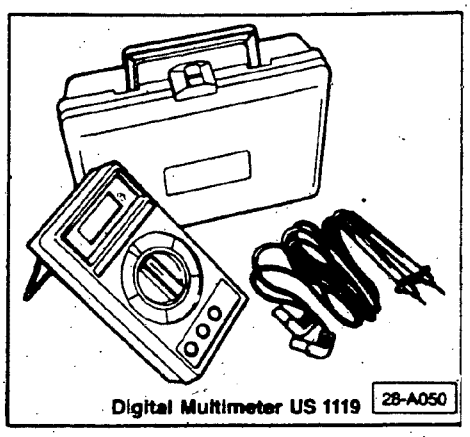

Digital Multimeter US 1119

Ignition wires and connectors, checking

Use multimeter **US 1119** for the following measurements.

Connect the tester according to the manufacturer's instructions.

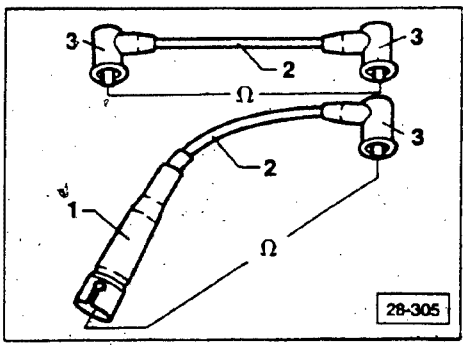

- check ignition wires **2** for continuity
- check ignition wires **2**:
  - between coil and distributor
    with radio: **2000 ± 800 ohms**
    without radio: **0 ohms**
  - between distributor and spark plug
    with radio: **6000 ± 1400 ohms**
    without radio: **1000 ± 400 ohms**
  - if not within range go to next check

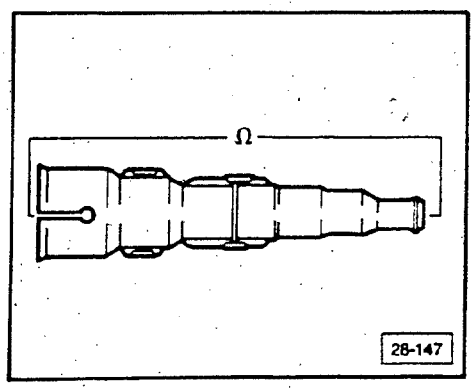

- check spark plug connector **1**
  - with radio (suppressed):
    5000 ± 1000 ohms
  - without radio (not suppressed):
    1000 ± 400 ohms

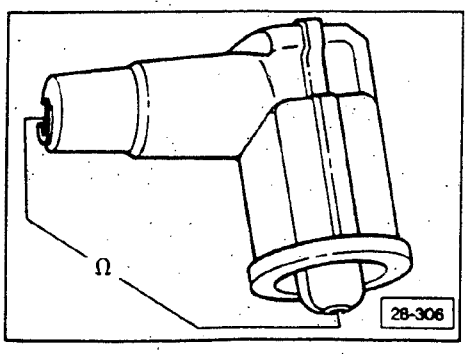

- check connector/suppressor **3**
  - resistance: **1000 ± 400 ohms**

If the specified values are **NOT** obtained after performing these checks:
- replace the faulty wire or connector

cardiagn.com

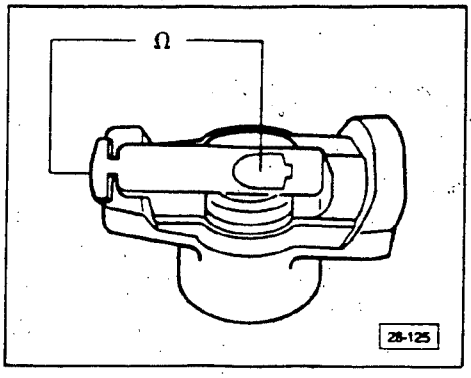

Distributor rotor, checking

- measure electrical resistance of distributor rotor
  - resistance: **1000 ± 400 ohms**

Note

Rotor must be marked with **R 1** (for Hall generator equipped cars).

cardiagn.com

Ignition distributor, installing

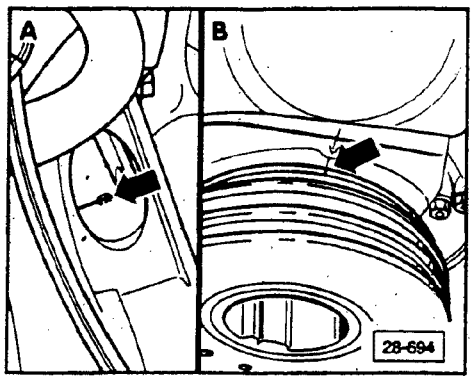

A — engine installed
- set flywheel to TDC — cylinder **1** (**arrow**)

B — engine removed
- marking on vibration damper (pulley) must align with marking on belt cover (**arrow**)

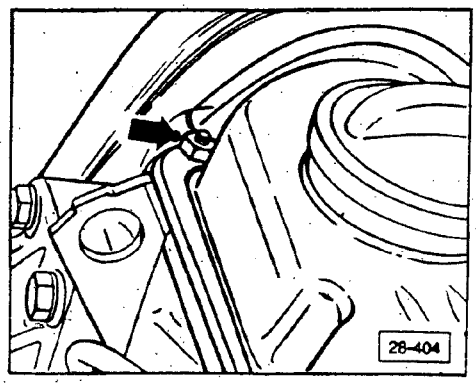

- marking on camshaft sprocket must align with cylinder head cover (**arrow**)

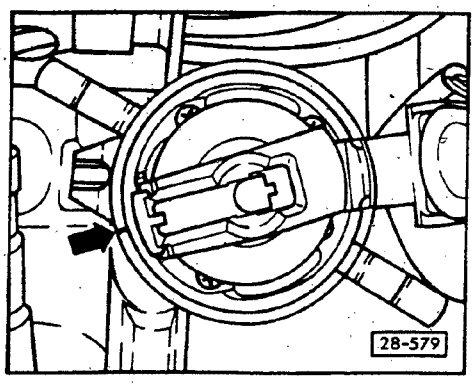

- install distributor so that the distributor rotor points to marking for cylinder **1** on distributor housing (**arrow**)
- clean distributor cap before installing
- check cap for cracks, carbon tracks due to arcing, replace if necessary

CAUTION

Idle speed, **Ignition timing** and **CO** are interrelated and must be checked and adjusted **together**.

- adjust ignition timing, section 28-180

cardiagn.com

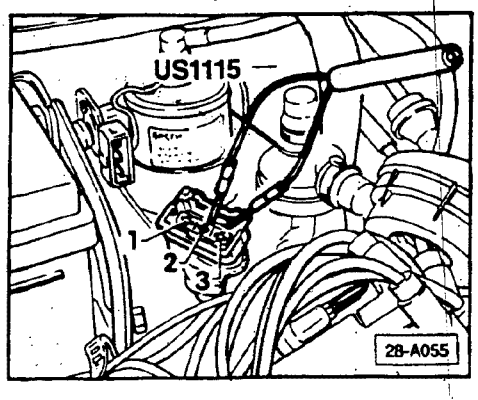

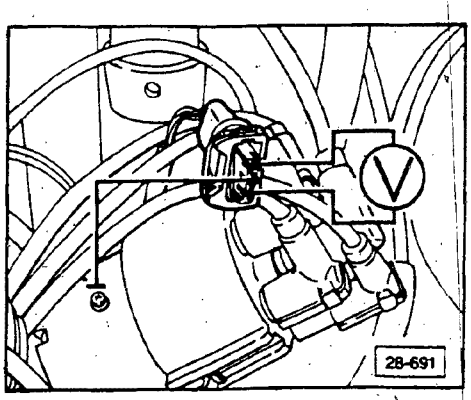

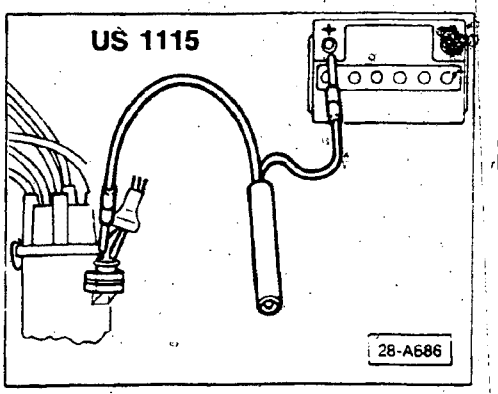

Hall sensor, checking

Note

Checking is necessary only if ignition spark is **NOT** present.

- remove harness connector from output stage of the ignition coil and connect LED tester **US 1115** to terminals **2** and **3**
- actuate starter and check signal from Hall sensor

If the **US 1115** fluctuates, Hall sensor is **OK** and test is ended.

If **NO**; continue

- remove harness connector from Hall sensor on distributor
- switch multimeter **US 1119** to 20 volt range
- connect multimeter to outer connections of harness connector and with ignition switched **ON**, check voltage supply for Hall sensor from ignition control unit
  - 9 volt minimum
- remove rubber boot from harness connector for Hall sensor and re-connect to Hall sensor connection on distributor
- connect LED tester **US 1115** to center wire of harness connector for Hall sensor and to ground (−)
- activate starter and check signal from Hall sensor
  - if the light diode flickers, the Hall sensor is **OK**

If **NO**
- Hall sensor is defective

  or
- ignition control unit is defective

- replace as necessary

cardiagn.com

Ignition coil, checking

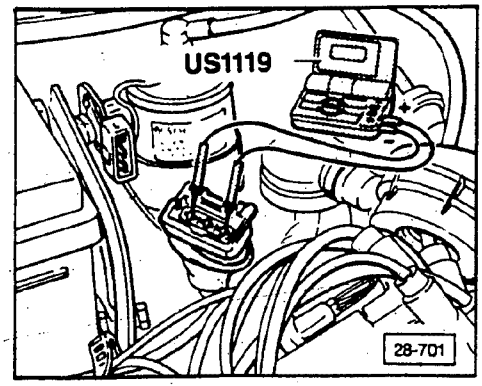

Power output stage, voltage supply checking

Requirement:
- ignition coil **OK**

- remove harness connector from power output stage
- switch multimeter **US 1119** to 20 volt range and connect to terminal **1** and terminal **3** of disconnected harness connector
- switch **ON** ignition
  - approximately battery voltage

If **NO**
- repair break in wiring using wiring diagram

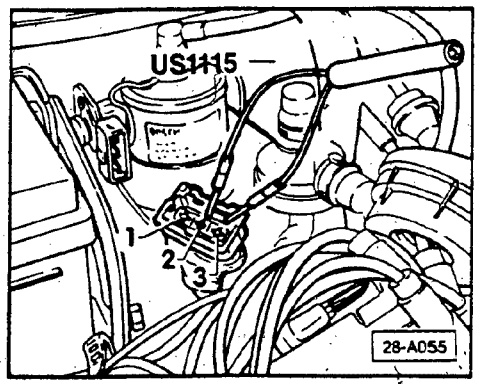

- connect LED tester **US 1115** to terminals **2** and **3** of harness connector
- activate starter and check for signal from Hall sensor
  - **US 1115** must flicker

If **NO**
- check Hall sensor, section 28-160

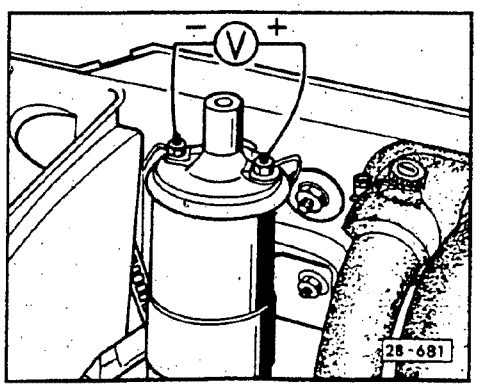

Triggering, checking

- switch **OFF** ignition
- reconnect harness connector to power output stage of coil
- remove harness connector from Hall sensor on distributor

- connect multimeter to terminal **1** (−) and terminal **15** (+) of ignition coil
- switch **ON** ignition

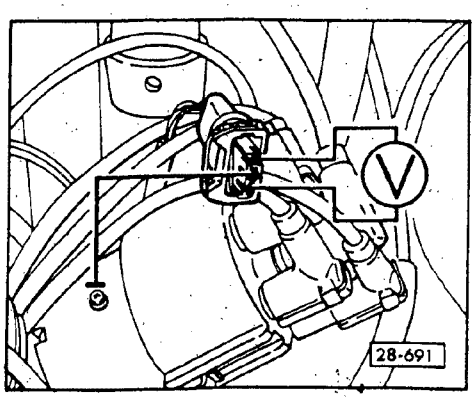

- briefly touch center wire from disconnected Hall sensor harness connector to ground
  - indicated voltage must increase to 2 volts minimum and after 1 to 2 seconds drop to zero volts

If the voltage does **NOT** drop:
- temporarily substitute a new power output stage and check previous step again, also inspect top of coil for leakage
- if necessary replace coil assembly complete with power output stage

cardiagn.com

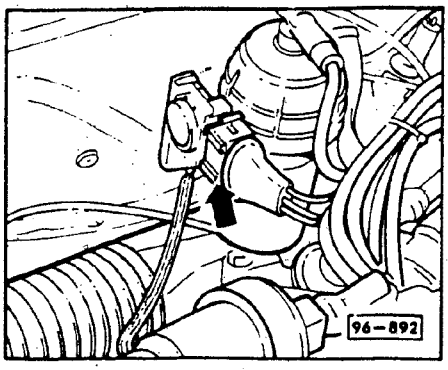

Ignition coil, checking

- check wiring between power output stage and ignition coil and ground wire between power stage and engine for corrosion or damage
- disconnect ignition coil power stage (**arrow**)

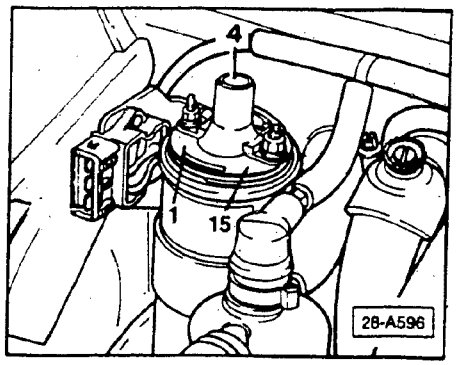

Secondary resistance, checking

- connect multimeter **US 1119** between terminals **1** and **4**
  - 5-9 K Ω

If **NO**
- replace ignition coil

Primary resistance, checking

- connect multimeter **US 1119** between terminals **1** and **15** of ignition coil
  - 0.5-1.5 ohm

If **NO**
- replace ignition coil

If all specified values are obtained and the engine still does not run (no ignition impulse)

- replace ignition coil complete with power output stage

> **CAUTION**
>
> The function of the power output stage is **NOT** to be tested.

cardiagn.com

CONTINUED IN THE

BEGINNING OF NEXT ROW

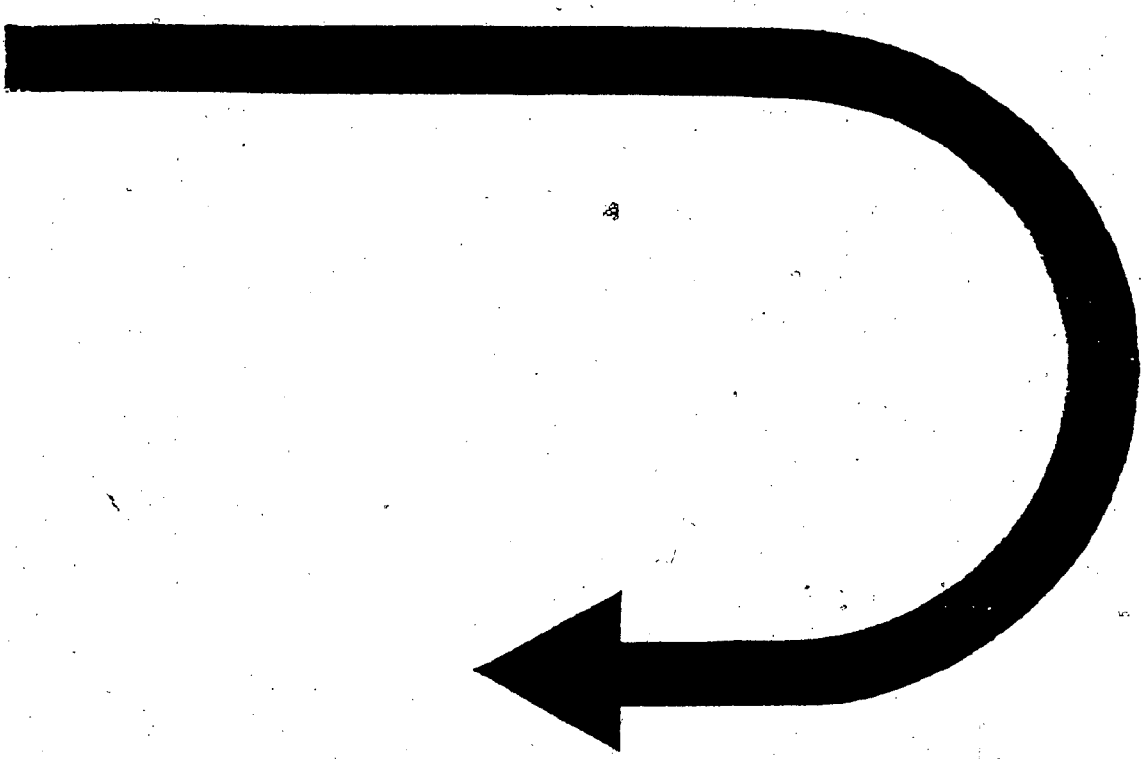

cardiagn.com

CAUTION

Idle speed, ignition timing and CO are interrelated and **must** be checked and adjusted **together**.

Engine settings, checking

Preparations for checking/adjusting

Requirements:

- engine oil temperature minimum 80°C (176°F)
- all electrical consumers switched **OFF**
- radiator cooling fan must **NOT** be running while checking or adjusting
- oxygen sensor connected
- A/C switched **OFF**
- no pressure measuring devices connected
- exhaust system must be tight and free of leaks
- OXS system **OK**

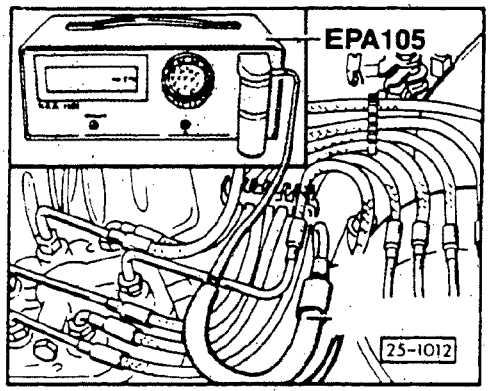

- remove cap from exhaust probe
- connect hose from exhaust gas analyzer (Sun 105 or EPA equivalent) to CO measuring tap (**arrow**)

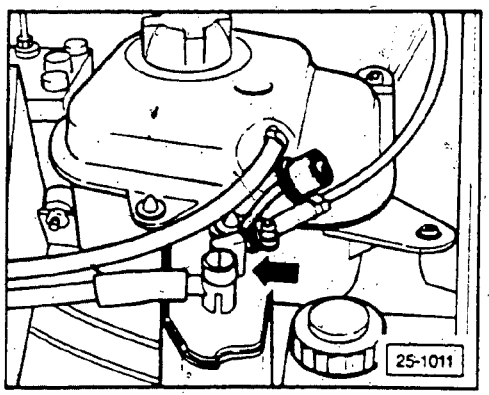

- remove cap (shaded) from carbon canister (**arrow**)

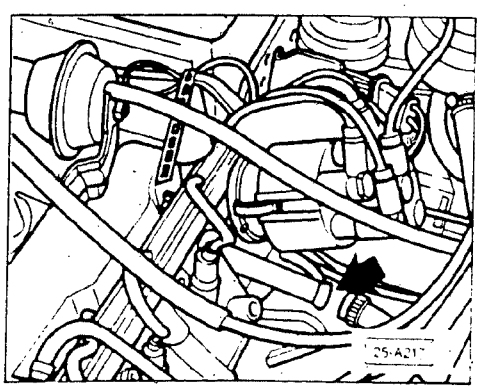

- remove crankcase breather connection at steel pipe
- plug opening of steel pipe (**arrow**)

Note

Crankcase vapors must vent to atmosphere during checking or adjusting procedure.

cardiagn.com

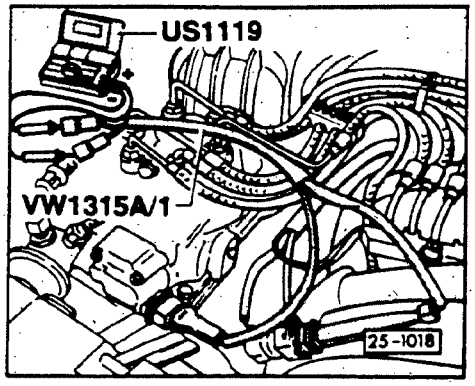

- connect multimeter **US 1119** or equivalent to differential pressure regulator with adaptor **VW 1315 A/1**
- set scale to 200 mA DC

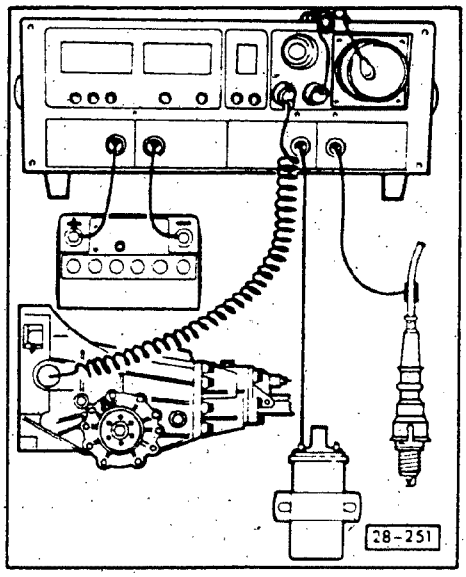

- connect **VW 1367** engine tester to check ignition timing and idle speed
- start engine and run to normal operating temperature (radiator fan must come on at least once)

Note

If you loosen or replace the injector lines, run the engine to about 3000 RPM for several minutes to bleed injectors and lines.

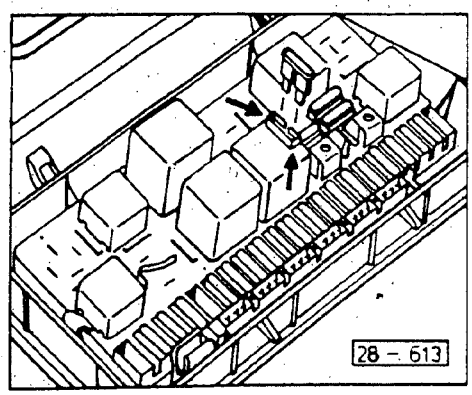

Engine settings, checking

- insert fuse in top of fuel pump relay (**arrow**)
  - indicator light must come on. This indicates that after four seconds, ignition timing is stabilized for testing purposes
- check ignition timing
  - 13° to 17° Before TDC

If **NO**

- adjust ignition timing to: 15° ± 1° Before TDC (see page 28-180-9)

cardiagn.com

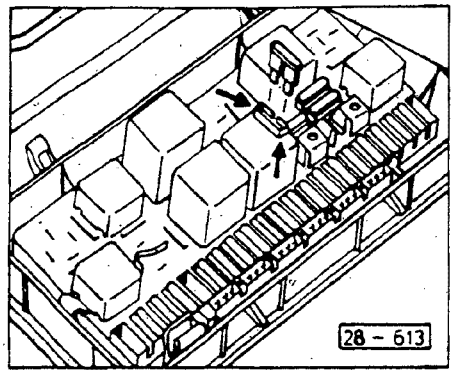

- remove fuse from fuel pump relay and briefly raise engine speed above 2500 RPM to cancel fault display
- check idle speed
  - 790 ± 70 RPM

Note

The idle speed is **NOT** adjustable (idle speed control is obtained through the idle stabilization system). The idle air bypass screw should be turned in fully against its seat.

- if idle speed is out of this range, check for an engine problem such as vacuum leaks, etc.

- check differential pressure regulator current with oxygen sensor **connected**
  - 0 ± 1 mA, adjust if necessary

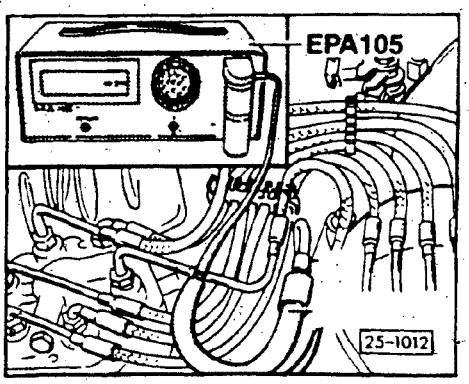

- check CO%
  - 0.3% to 1.2%

Note

Vehicles with air conditioning only:
If the idle speed should drop severely when the air conditioner is switched **ON**, check the idle stabilization system (Group 25). If injection lines were disengaged or replaced, the engine speed must be raised to 3000 RPM several times then left idling for at least 2 minutes before adjustment. The idle speed is automatically regulated by the idle stabilization valve.

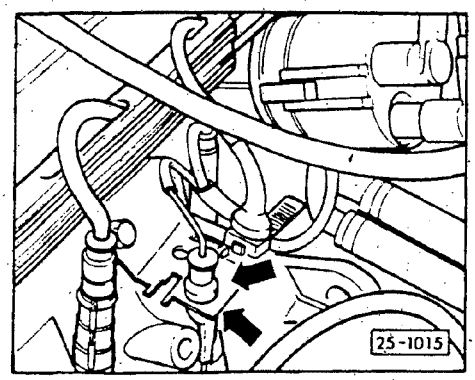

- disconnect oxygen sensor harness connector (**arrows**)
- check CO-value, if necessary adjust with CO-adjustment screw (Page 25.61)
  - checking value: 0.3-3.0 vol. %
    adjustment value: 0.6-1.0 vol. %

cardiagn.com

If the CO value is less than 0.3 or more than 3.0% volume when the oxygen sensor is disconnected, adjust the CO as follows:

- switch ignition **OFF**
- remove rubber boot from mixture control unit
- **lightly** center punch mixture adjusting screw plug
- drill 2.5 mm (3/32 in) hole in center of plug approximately 3.5 to 4.0 mm (9/64 to 5/32 in) deep

CAUTION

Clean up any metal shavings. Apply grease to drill bit to catch loose shavings.

- screw in 3 mm (1/8 in) sheet metal screw
- remove plug/screw, using pliers
- reinstall rubber boot
- start engine and run at idle

CAUTION

When adjusting do **NOT** push adjustment wrench down or accelerate engine with adjusting tool in place. Remove the tool after each adjustment and briefly accelerate engine before reading CO value.

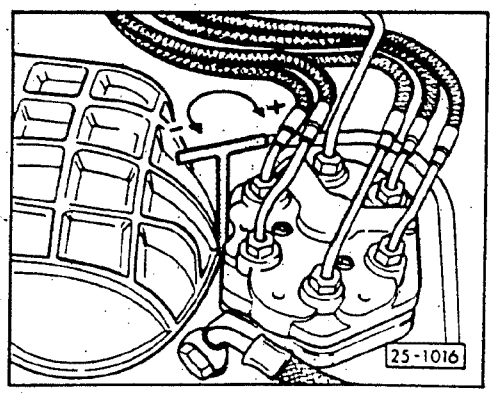

- adjust CO by turning mixture adjusting screw using tool **P377**
  - counter-clockwise: CO value increases
    clockwise: CO value decreases

Note

After adjusting, the hoses for the crankcase must be reconnected. If the control current and the CO content change, this is not due to an improper adjustment, but rather to oil dilution caused by short distance driving. Long distance driving reduces the amount of fuel in the oil and normalizes the CO value. A short term solution would be an oil change.

After adjusting, the specified value must fluctuate with the oxygen sensor connected.

If **NO**

- check the oxygen sensor (Group 25)

cardiagn.com

Idle and CO content, checking and adjusting

Note

Until 2-88 the throttle bypass screw was installed in a fully seated position and then sealed with safety paint.

Beginning 3-88 the throttle bypass screw was no longer installed.

Check these first:

- engine oil temperature 80°C (176°F) minimum
- all electrical consumers switched **OFF**
- radiator fan must **NOT** be running during checking or adjusting
- A/C switched **OFF**
- do **NOT** have any pressure measuring devices connected
- if injection lines were loosened or replaced, raise engine to 3000 RPM's several times then let idle for at least two minutes before making adjustments
- exhaust system **MUST** be tight and free of leakage
- oxygen sensor control system **OK**
- ignition timing adjustment **OK**

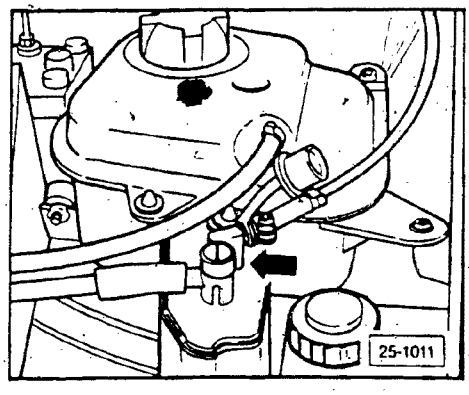

▶ ■ remove cap from carbon canister (**arrow**)

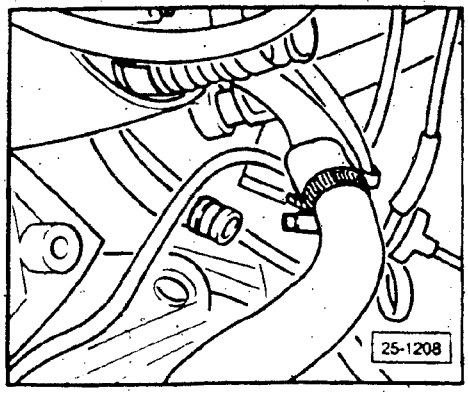

▶ ■ remove crankcase housing ventilation hose
■ install plug in metal tube

cardiagn.com

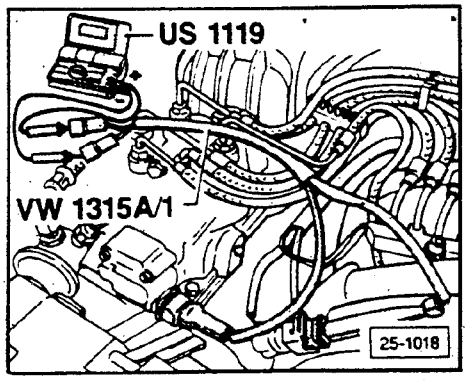

- remove harness connector from differential pressure regulator
- connect test adaptor **VW 1315 A/1 between** differential pressure regulator and its harness connector
- switch multimeter **US 1119** to 200 mA range

- remove cap from CO tap tube
- connect **SUN 105** CO tester according to manufacturers instructions

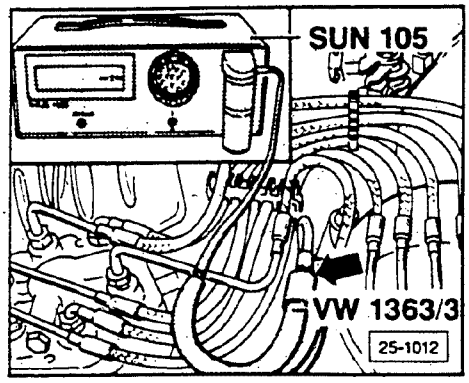

Note

Hose must fit securely over the CO tap tube (**arrow**), so there is no exhaust leakage.

- start engine and let idle

Note

The following procedure tests the function of the deceleration fuel shut off and the idle switch.

- briefly raise engine speed to approximately 4000RPM
- snap throttle shut
  - multimeter **MUST** indicate negative 50-60 mA for a short time

If reading indicates positive 50-60 mA:
- reverse meter connections

If **NO** value is indicated
- check idle switch see Repair Group 25

Workshops over 1000 meters (3280 feet) of elevation: see section 28-180-7

Workshops between sea level and 1000 meters (between 0 and 3280 feet) of elevation:

- checking: 0 ± 3 mA

CO value as indicated on the **SUN 105** CO tester must be
- 0.3 o 1.2 volume %

If **NO**
- turn **OFF** ignition
- remove intake air boot from mixture control unit

cardiagn.com

- **lightly** center punch mixture adjusting screw plug
- drill 2.5 mm (3/32 in.) hole in center of plug to a depth of 3.5 to 4.0 mm (9/64 to 5/32 in.)

> **CAUTION**
>
> Clean up any metal shavings. Apply grease to drill bit to catch any shavings.

- screw in 3 mm (1/8 in.) sheet metal screw
- remove plug with screw, using pliers
- start engine and run at idle

> **CAUTION**
>
> When adjusting do **NOT** push adjustment wrench down or accelerate engine with adjusting tool in place. Remove tool after each adjustment and briefly accelerate engine before reading the CO value.

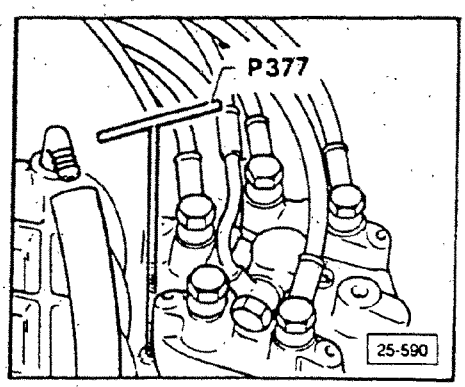

- adjust CO by turning mixture adjusting screw with tool **P377**
  - adjusting value: 0 ± 1 mA

Workshops above 1000 meters (3280 feet) of elevation:

- disconnect oxygen sensor harness connector (green wire)
- let engine idle
  - record mA value of differential pressure regulator current

Note

The value obtained with the oxygen sensor disconnected is the altitude correction factor.

- re-connect oxygen sensor harness connector (green wire)
  - note mA value and compare with the value obtained with the sensor disconnected

cardiagn.com

If the difference between readings is **more** than ± 3 mA: adjust as follows:

- turn **OFF** ignition
- remove intake air boot from mixture control unit
- **lightly** center punch mixture adjusting screw plug
- drill 2.5 mm (3/32 in.) hole in center of plug to a depth of 3.5 to 4.0 mm (9/64 to 5/32 in.)

> **CAUTION**
>
> Clean up any metal shavings. Apply grease to drill bit to catch any shavings.

- screw in 3 mm dia. (1/8 in.) sheet metal screw
- remove plug with screw, using pliers
- start engine and run at idle

> **CAUTION**
>
> When adjusting do **NOT** push adjustment wrench down or accelerate engine with adjusting tool in place. Remove tool after each adjustment and briefly accelerate engine before reading the CO value.

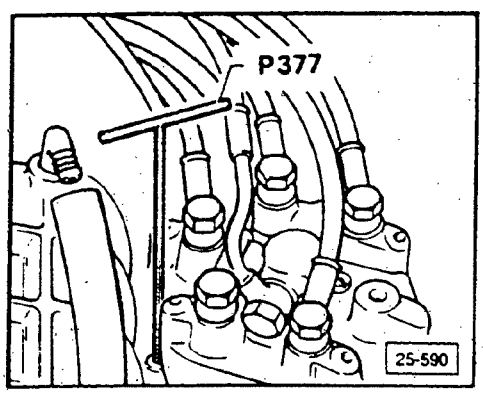

- ensure that oxygen sensor has been reconnected and that mA current is fluctuating slightly

- adjust CO by turning mixture adjusting screw with tool **P377**
  - adjusting value: ± 1 mA of reading taken while oxygen sensor was disconnected

Example:

If the reading with the oxygen sensor disconnected was 4 mA and the reading with the oxygen sensor connected was 0 mA the difference would be 4 thus requiring an adjustment.

You would then make an adjustment of 4 ± 1 mA (**WITH** the oxygen sensor **CONNECTED**).

cardiagn.com

CAUTION

These are the detailed instructions for adjusting the ignition timing. They are not meant to be performed separately from idle and CO adjustments. (See engine settings).

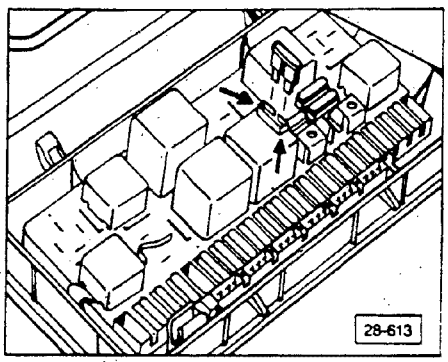

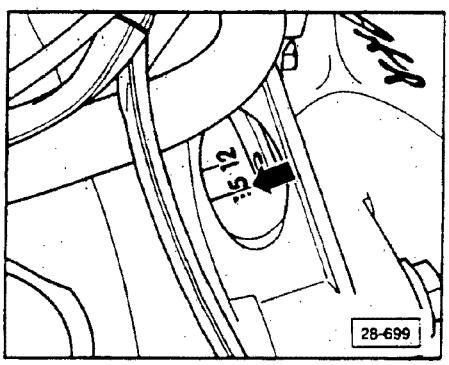

Ignition timing, adjusting (1987, 1988)

Check these first:

- engine oil temperature at least 80°C (176°F)
- A/C switched **OFF**
- knock sensor **OK** (no fault code displayed)

- connect engine tester **VW 1367** for timing point and RPM display
- start engine and let idle

- insert fuse in fuel pump relay **(arrows)**
- after at least 4 seconds check timing

Checking with TDC — sensor:

Ignition timing point is displayed numerically on the **VW 1367**

- checking value: 13 to 17°C Before TDC

Checking with strobe light:

Ignition timing mark on flywheel (15°) flashes

If **NO**

- loosen distributor clamp

- adjust ignition timing by turning the distributor
  - adjustment value: 15 ± 1° Before TDC

- remove fuse from fuel pump relay and increase engine speed to briefly exceed 2500/RPM
- let engine idle. Ignition timing point must fluctuate between approximately 7° and 20°
- adjust idle speed if necessary (page 28-180-3)
- tighten distributor clamp bolt
  - 25 Nm (18 ft lb)

cardiagn.com

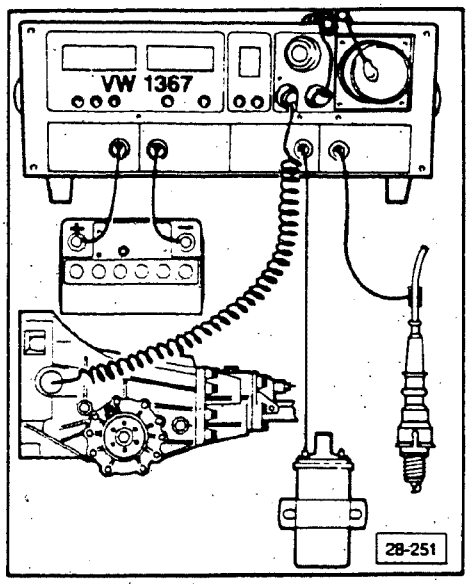

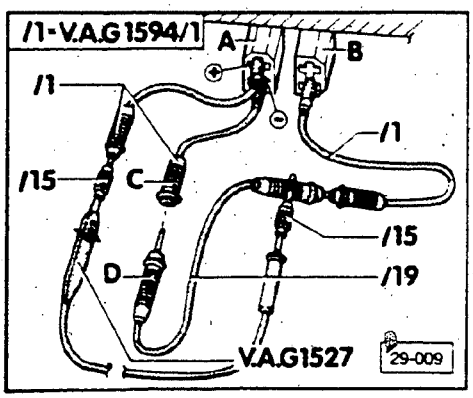

Ignition timing, checking (1989)

Check these first:
- engine oil temperature 80°C (176°F) minimum
- throttle in idle position
- A/C switched **OFF**

- connect **VW 1367** engine tester according to manufacturer's instructions

> **CAUTION**
>
> Make sure that the **VW 1367** TDC pickup is fully seated into the transmission housing recess.

- start engine and let idle

Note

The ignition timing point is displayed directly on the **VW 1367** engine tester. Checking ignition timing using a strobe is **NOT** necessary.

- jumper terminal **C** (ground) with terminal **D** until ignition timing checking/adjusting is completed
  - checking: 13 to 17° Before TDC
  - adjusting: 15 ± 1° Before TDC

Note

A constant ignition timing point is available from the ignition control unit 4 seconds after terminal **C** is jumpered to terminal **D**.

Ignition timing, adjusting

- loosen distributor clamp bolt
- rotate distributor until specification is obtained
- remove jumper between terminals **C** and **D**
- briefly increase engine speed above 2500 RPM
- let engine idle
  - ignition timing must fluctuate between 7° and 20° Before TDC
- if necessary, adjust idle and CO content

cardiagn.com

Index

20-valve (up to 03/90 prod.)

Hall sensor
- checking 28-240

Ignition coil
- checking 28-220

Ignition distributor
- installing 28-250

Ignition system
- technical data 28-200

Ignition timing sensor
- checking 28-230

MPI system
- component layout 28-190

System precautions
- rules of cleanliness 28-210
- safety measures 28-210

cardiagn.com

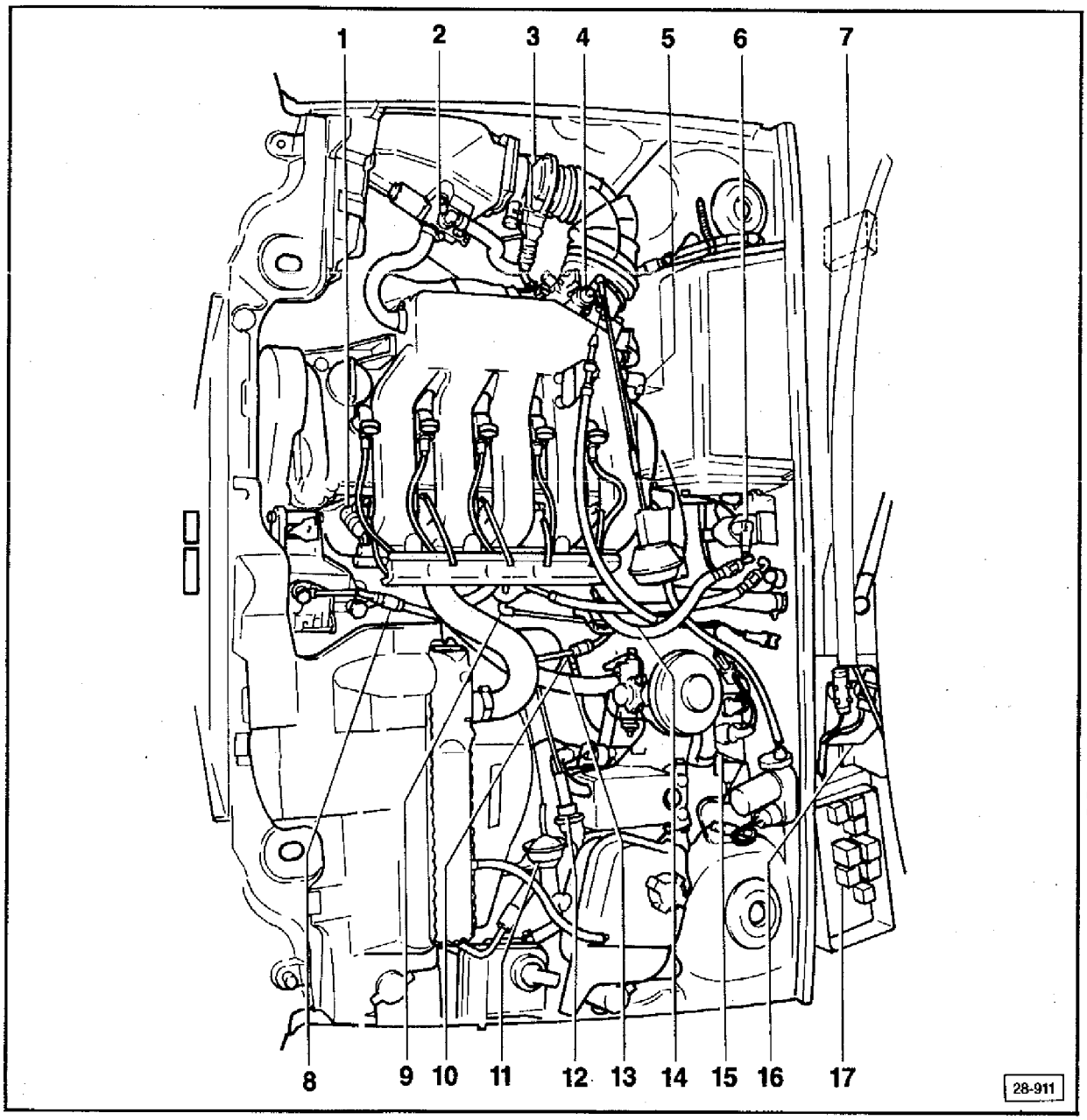

Multimeter **US 1119,** LED tester **US 1115** and the **VW 1594** adaptor kit are required for checking the following components.

1 — **Fuel injector**
- control, checking see Repair Group 24

2 — **Idle stabilizer valve**
- control, checking see Repair Group 24

3 — **Air mass sensor**
- checking see Repair Group 24

4 — **Throttle body potentiometer**
- checking see Repair Group 24

5 — **Coolant temperature sensor**
- checking see Repair Group 24

6 — **Ignition coil with power output stage**
- checking see section 28-220

7 — **MPI control unit**
checking see Repair Group 24

8 — **Knock sensor I — 10 Nm (7 ft lb)**

9 — **Knock sensor II — 10 Nm (7 ft lb)**

10 — **Ignition timing sensor**
- checking, section 28-230

11 — **Carbon canister shut-off valve**
- checking see Repair Group 24

12 — **Carbon canister frequency valve**
- checking see Repair Group 24

cardiagn.com

13 — **Engine speed sensor**
- checking see Repair Group 24

14 — **Ignition distributor with Hall sender**
checking, see section 28-240

15 — **Connector bracket**

16 — **Series resistor pack**
- checking see Repair Group 24

17 — **Fuel pump relay**
- checking ree Repair Group 24

cardiagn.com

Tuneup specifications
~~1990-1991 m.y.~~

Engine code letters		7A
Ignition distributor		034 905 205 J
Ignition distributor basic setting*		TDC
Timing mark location		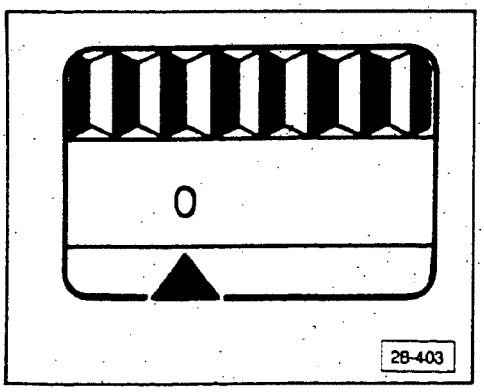
Ignition timing sensor**	resistance	approximately 1000 ohms
Engine speed sensor***	resistance	approximately 1000 ohms
CAUTION It it **NOT** possible to adjust the ignition timing. Ignition timing is determined by the control unit ignition map.		
Spark plugs	part no.	191 905 450 J
		Bosch F 6 DTC
Electrode gap Tightening torque		0.8 + 0.1 mm (0.031 + 0.004 in) 20 Nm (15 ft lb)
Firing order		1-2-4-5-3
RPM limit (cutout)		starts at 7200 RPM, completes at 7400 RPM
Ignition coil	secondary resistance	6500 to 8000 ohms
	primary resistance	approximately 0 to 1 ohm
Ignition distributor rotor	resistance	1000 ohms

*see section 28-250
**Ignition timing sensor, checking, section 28-230
***Engine speed sensor, checking, see Repair Group 24

CAUTION

Part numbers are for reference only. Always consult with the Parts Department for the latest information.

cardiagn.com

System precautions

Safety measures

CAUTION

Observe the following precautions to prevent personal injury as well as possible damage to the ignition system components.

- switch **OFF** the ignition before connecting or disconnecting components or test equipment
- do **NOT** crank engine before high tension wire of ignition distributor (terminal **4**) is connected to ground
- do **NOT** use battery booster longer than one minute nor should 16.5 volts be exceeded
- do **NOT** wash engine unless ignition is switched **OFF**
- disconnect **BOTH** battery terminals whenever arc or spot welding
- before towing, vehicles with a defective ignition system (or where this is suspected) must have terminal **1** (green) of the ignition coil disconnected
- do **NOT** connect a condenser of any kind to terminal **1** of the ignition coil
- when installing noise suppressor, **ONLY** use 1000 ohms for high tension wires and 5000 ohms for spark plug connectors
- do **NOT** replace distributor rotor (marked **R1**) with a different type
- if the vehicle is heated up (e.g. in a painting booth) do **NOT** start the engine until it has had sufficient time to return to room temperature

cardiagn.com

Rules of cleanliness

CAUTION

When working on the fuel supply/ injection system, carefully observe the following rules:

1 — Thoroughly clean connection and surrounding areas before loosening connection.

2 — After removing components, place in clean area and cover with foil or paper. Avoid using rags!

3 — Components which have been opened or disassembled must be carefully covered or sealed if repair cannot be carried out immediately.

4 — Install clean parts only.
- remove replacement parts from package just before installing.
- do **NOT** use spare parts that were stored loose or unpackaged (e.g. in tool boxes, etc.).

5 — When fuel system is open:
- Avoid using compressed air whenever possible.
- Avoid moving the vehicle whenever possible.

cardiagn.com

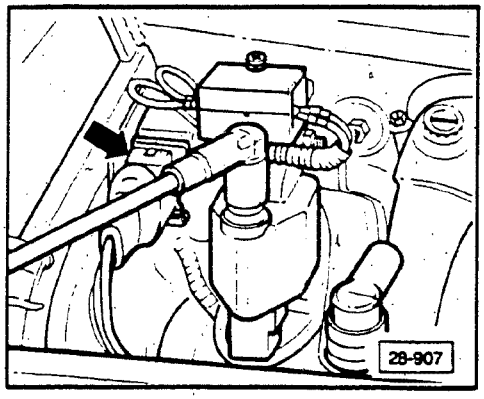

Ignition coil (with power output stage), checking

Control, checking

- remove harness connector (**arrow**) from power output stage of ignition coil

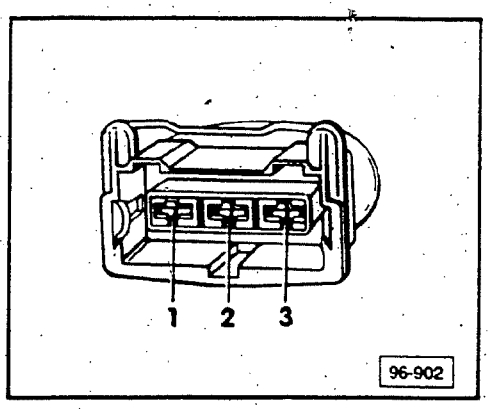

- switch multimeter **US 1119** to 20 volt range
- connect multimeter first between terminals **1** and ground then between terminals **1** and **3**
- switch ignition **ON**
  - approximately 12 volts

If voltage value is **NOT** obtained
- check wiring using wiring diagram
- connect multimeter between terminals **2** and **3**
- crank engine with starter
  - 0.2 volts minimum

If voltage value is **NOT** obtained
- remove foot-well cover under glove compartment
- remove (black) harness connector **A** from control unit

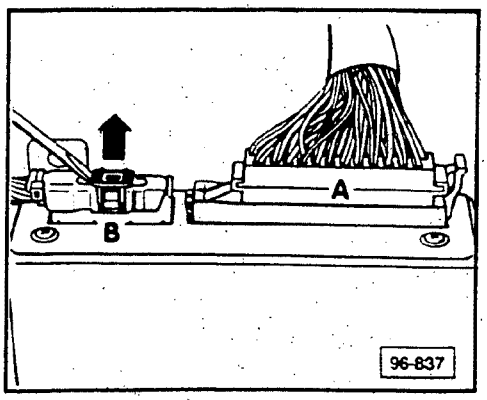

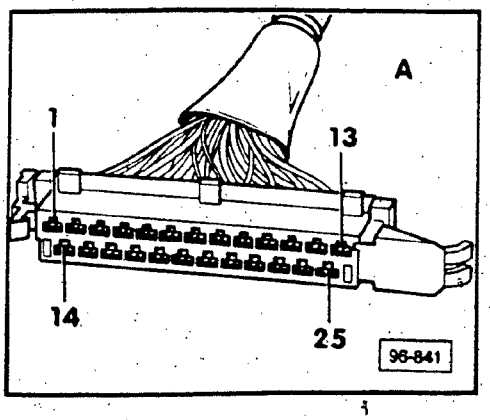

- check wiring between terminal **2** of power output stage harness connector and terminal **9** from harness connector **A** of control unit

If **NO** open circuits are found
- replace MPI control unit

cardiagn.com

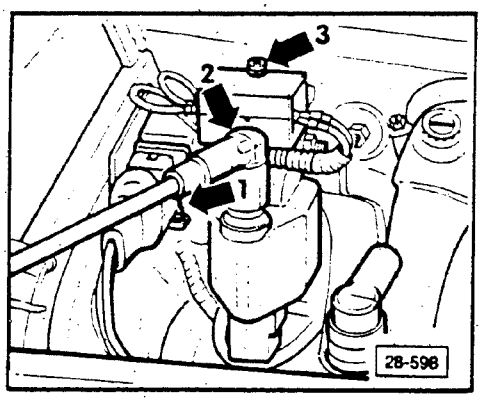

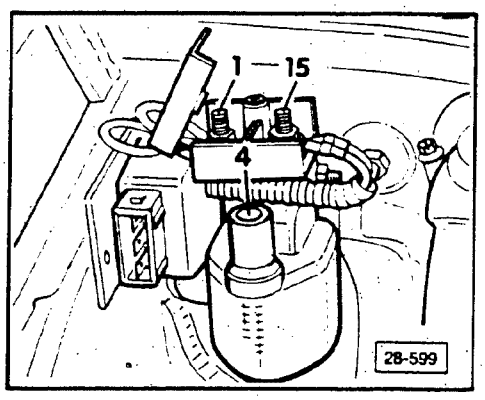

Ignition coil, checking

Note

Check connectors and wiring between power ouput stage and ignition coil and between power output stage and engine for corrosion or insulation damage.

Secondary resistance, checking

- remove harness connector **1** from power output stage
- remove coil wire **2** from ignition coil
- remove screw **3**
- switch multimeter **US 1119** to resistance range
- connect multimeter between terminals **1** and **4** of ignition coil
  - 5000 to 9000 ohms

If resistance value is **NOT** obtained
- replace ignition coil

Primary resistance, checking

- connect multimeter between terminals **1** and **15** of ignition coil
  - 0.5-1.5 ohms

If resistance value is **NOT** obtained
- replace ignition coil

If coil resistance values are obtained but ignition pulse is still **NOT** present; power output stage is defective
- replace ignition coil assembly

CAUTION

The function of the power output stage **CANNOT** be checked.

cardiagn.com

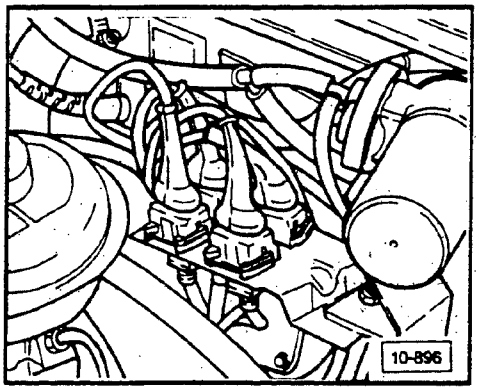

Ignition timing sensor, checking

- separate black connector (left side engine compartment near plenum) and remove from bracket (sensor side of cable is color marked)
- switch multimeter **US 1119** to resistance range

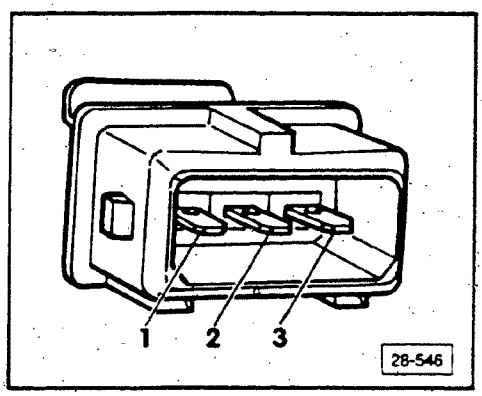

- switch multimeter **US 1119** to resistance range
- connect multimeter between terminals **1** and **2**
  - approximately 1000 ohms

If resistance value is **NOT** obtained
- replace ignition timing sensor

If resistance value **IS** obtained
- connect multimeter between terminals **1** and **3** then **2** and **3**
  - infinite ohms (open)

If resistance values are **NOT** obtained
- replace ignition timing sensor

If resistance values **ARE** obtained
- check wiring between ignition timing sensor harness connector and control unit harness connector **B** as follows:
- remove foot-well cover under glove compartment

cardiagn.com

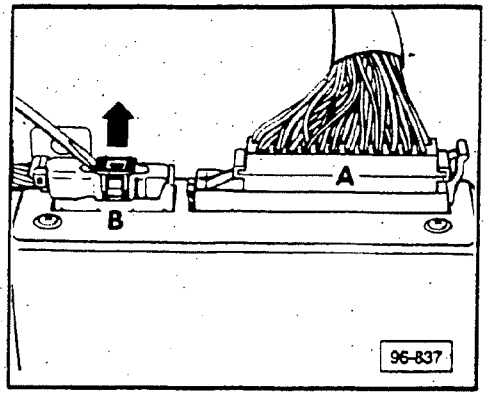

- pry open secondary lock (black) of control unit harness connector **B** and remove

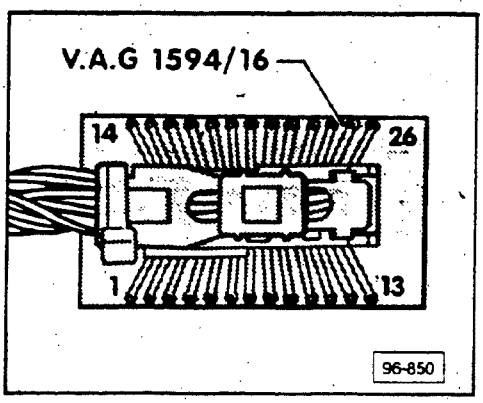

- attach harness connector **B** to test adaptor **VAG 1594/16**
- check continuity between sensor connector and measuring adaptor

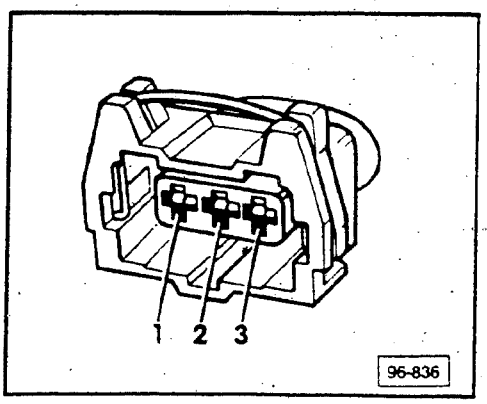

Harness connector B		Test adaptor
1	⟷	12
2	⟷	24
3	⟷	24

- approximately 0 ohms (continuity)

If resistance values are **NOT** obtained
- check wiring using wiring diagram

If resistance values **ARE** obtained
- check gap between pin and ignition timing sensor (see group 13)

If gap is **OK**
- replace MPI control unit

cardiagn.com

Hall Sensor, checking

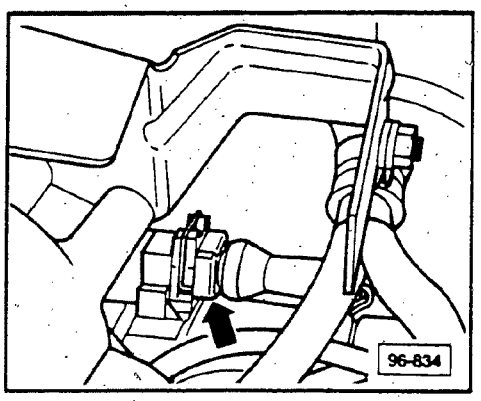

CAUTION

To check Hall Sensor, remove wiring (terminal **4**) from ignition distributor and connect to ground using jumper and clip.

- remove Hall Sensor harness connector (on ignition distributor, see arrow)

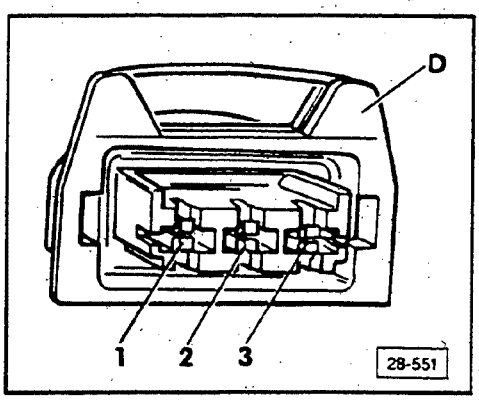

- switch multimeter **US 1119** to 20 volt range
- connect multimeter to outer terminals (**1** and **3**) and connector **D**
- switch ON ignition
  - 9 volts minimum

If voltage value is **NOT** obtained
- check wiring using wiring diagram
- switch **OFF** ignition

Note

The connector cavities are correspondingly numbered on the rear side of the connector.

CAUTION

The distributor rotor is bonded to the shaft and cannot be removed. Replace distributor assembly if there is damage.

- push back rubber boot on Hall Sensor harness connector and reconnect
- connect multimeter between terminals **2** and **1**
- remove ignition distributor cap

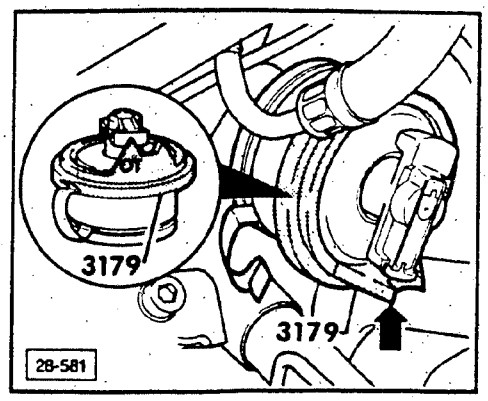

- install special tool **3179** on ignition distributor and engage in groove
- switch **ON** ignition
- turn crankshaft using special tool **2079** until rotor marking is precisely lined up with TDC mark on **3179**
  - 4.0 volts minimum

cardiagn.com

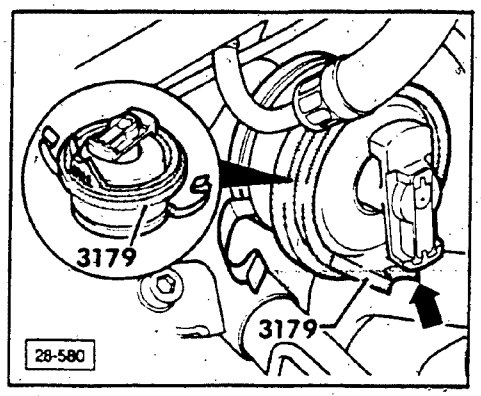

- turn crankshaft until rotor mark is precisely lined up with Hall mark
  - 0-0.5 volts

If voltage value is **NOT** obtained
- replace distributor assembly

If voltage value **IS** obtained
- check wiring between Hall Sensor and control unit as follows
- remove foot-well cover under glove compartment

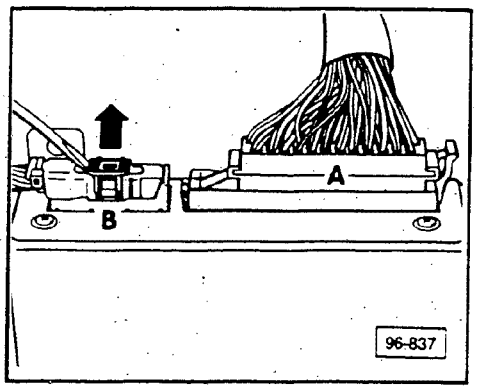

- pry open secondary lock (black) of control unit harness connector **B** and remove

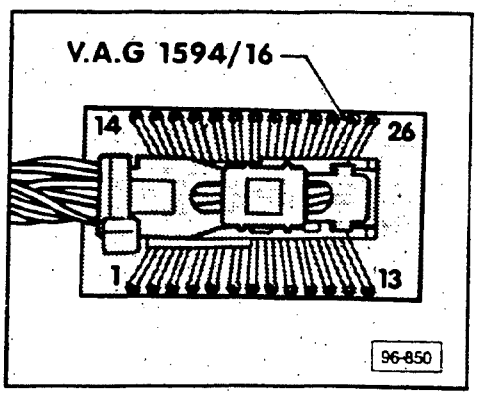

- connect measuring adaptor **VAG 1594/16** to control unit harness connector **B**

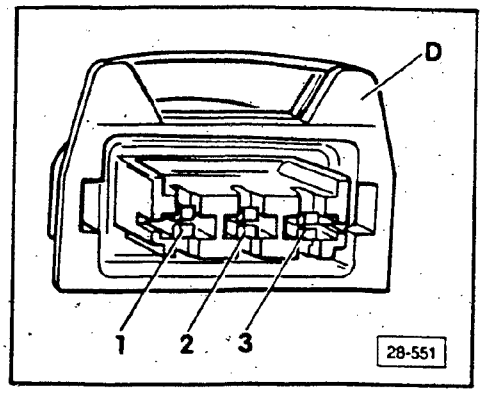

- switch multimeter **US 1119** to resistance range
- check continuity between Hall Sensor connector **D** and measuring adaptor

Connector D		Measuring adaptor
1	⟷	23
2	⟷	11
3	⟷	1

- approximately 0 ohms (continuity)

If continuity is **NOT** obtained
- check wiring using wiring diagram

If continuity **IS** obtained
- replace MPI control unit

cardiagn.com

Ignition distributor, installing

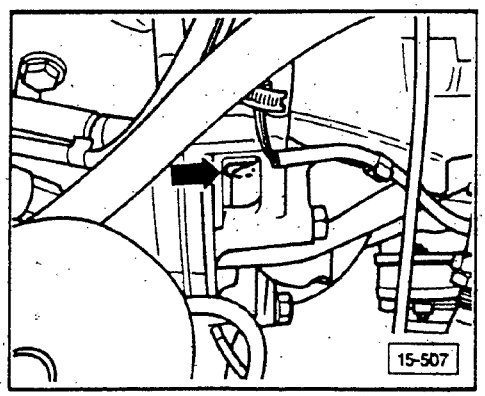

Note

The distributor rotor is bonded to its shaft and cannot be removed without being destroyed.

- turn crankshaft to TDC (**arrow**) with tool **2079**

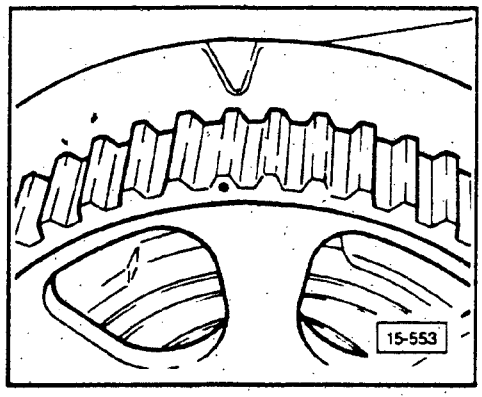

- dot on camshaft must line up with marking on cylinder head cover

Note

Basic setting is required because final position of distributor is limited by ignition wire lengths.

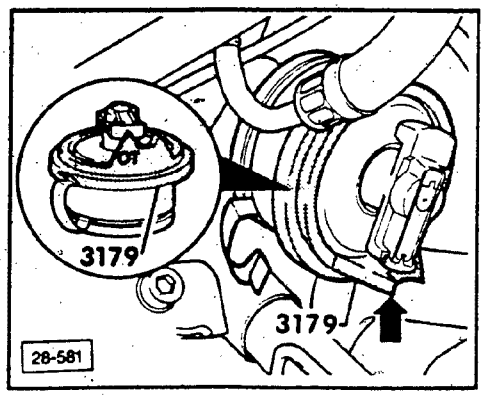

- install tool **3179** on distributor and position in groove (**arrow**)
- align rotor mark with TDC mark
- insert distributor then turn housing until rotor mark precisely aligns with TDC mark on tool **3179**
- tighten distributor base clamp

cardiagn.com

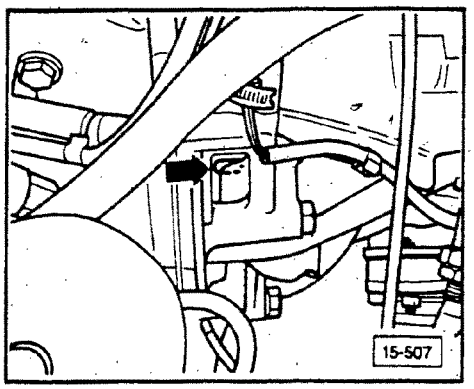

Ignition distributor, basic setting (engine not running)

- turn crankshaft to TDC (**arrow**) using tool **2079**

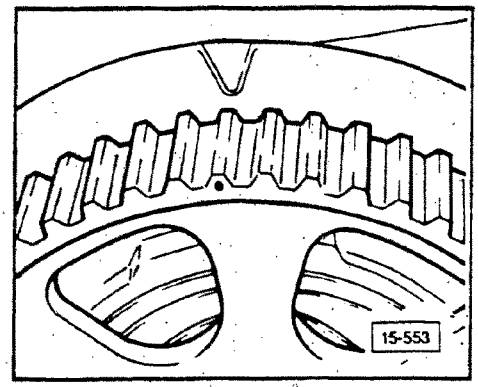

- dot on camshaft must line up with marking on cylinder head cover
- remove distributor cap

CAUTION

Distributor rotor is bonded to shaft, and cannot be removed. Replace distributor assembly if damaged.

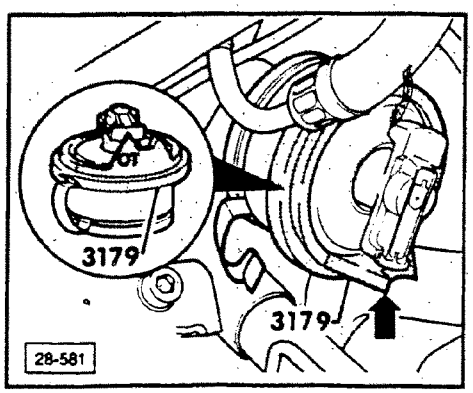

- install tool **3179** on distributor and position in groove
- loosen distributor base clamp
- turn distributor housing until rotor mark is precisely aligned with TDC mark on **3179 (arrow)**
- tighten distributor base clamp

cardiagn.com

Index

20-valve (from 03/90 prod.)

Coolant temperature sender
- checking 28-310

Engine speed sensor
- checking 28-320

Hall sensor
- checking 28-350

Ignition coil
- checking 28-290

Ignition distributor
- installing 28-360

Ignition system
- technical data 28-270

Ignition timing sender
- checking 28-300

Knock sensors
- checking 28-340

MPI system
- component layout 28-260
- control unit
  voltage supply, checking 28-330

System precautions
- rules of cleanliness 28-280
- safety measures 28-280

cardiagn.com

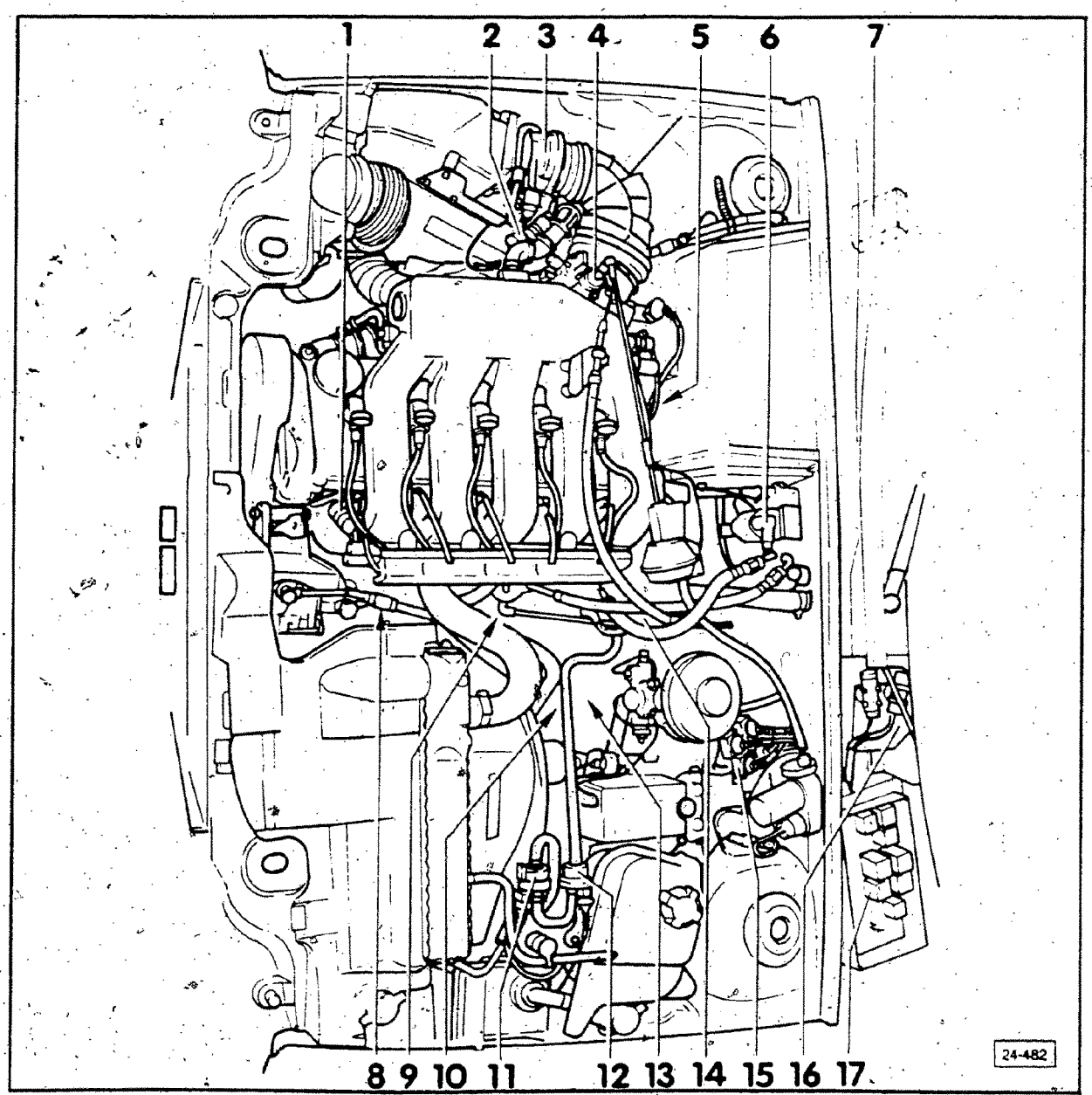

1 — **Fuel injector**
- checking, see Repair Group 24

2 — **Idle stabilizer valve (N 71)**
- checking, see Repair Group 24

3 — **Air flow sensor (G 70)**
- checking, see Repair Group 24

4 — **Throttle body**
- potentiometer checking, see Repair Group 24

5 — **Coolant temperature sender (G 62)**
- checking, section 28-310

6 — **Ignition coil (N) with power output stage**
- checking, section 28-290

7 — **MPI control unit (J 192)**
- voltage supply checking, section 28-330

8 — **Knock sensor I (G 61)**
- **10 Nm (7 ft lb)**, checking section 28-340

9 — **Knock sensor II (G 66)**
- **10 Nm (7 ft lb)**

10 — **Ignition timing point sender**
checking, section 28-300

11 — **Solenoid valve II (N 115) (ON/OFF valve) for carbon canister system**
- checking, see Repair Group 24

cardiagn.com

12 — **Solenoid valve I (N 80) (frequency valve) for carbon canister system**
- checking, see Repair Group 24

13 — **Engine speed sender (G 28)**
- checking, section 28-320

14 — **Ignition distributor with Hall sender**
- basic adjustment, section 28-360
- Hall sender checking, section 28-350

15 — **Harness connector mounting bracket**

16 — **Resistor pack (N 34) for fuel injectors**
- checking, see Repair Group 24

17 — **Fuel pump relay (J 17)**
- checking triggering, see Repair Group 24

cardiagn.com

Tuneup specifications
1990-1991 m.y.

Engine code		7A
Ignition distributor		034 905 205 J
Timing mark location		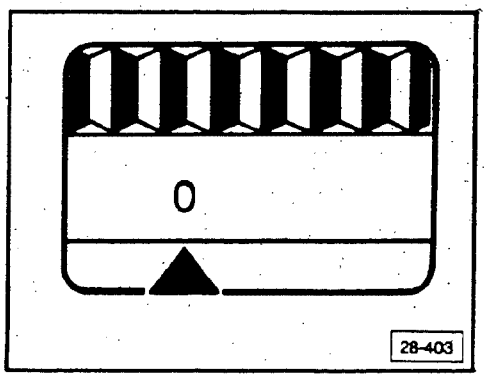
Ignition timing point		TDC
Ignition timing sender checking, section 28-300	resistance checking	approximately 1000 ohms
Engine speed sender checking, see Repair Group 24	resistance checking	approximately 1000 ohms
Spark plugs	part number electrode gap tightening torque	Bosch F 6 DTC 101 000 004 AA 0.8 ± 0.1 mm 20 Nm (15 ft lb)
Firing Order	Cylinder number	1-2-4-5-3
RPM limit		7200 ± 200 rpm
Resistance checking Ignition coil	Secondary resistance	6500 to 8000 ohms
	Primary resistance	0 to 1 ohm
Distributor rotor		approximately 1000 ohms

Note

Ignition timing is determined by the control unit map and feedback signals. Ignition timing is NOT adjustable.

Basic distributor adjustment see section 28-360

CAUTION

Part numbers are for reference only. Always consult with the Parts Department for the latest information.

cardiagn.com

System precautions

Rules of Cleanliness

CAUTION

When working on the fuel supply/injection system, carefully observe the following rules:

1 – Thoroughly clean connection and surrounding areas before loosening connection.

2 – After removing components, place in clean area and cover with foil or paper. Avoid using rags!

3 – Components which have been opened or disassembled must be carefully covered or sealed if repair cannot be carried out immediately.

4 – Install clean parts only.

- remove replacement parts from package just before installing
- do **NOT** use spare parts that were stored loose or unpackaged (e.g. in tool boxes, etc.)

5 – When fuel system is open:

- avoid using compressed air whenever possible
- avoid moving the vehicle whenever possible

cardiagn.com

Safety measures

CAUTION

Observe the following precautions to prevent personal injury as well as possible damage to the ignition system components.

- switch **OFF** the ignition before connecting or disconnecting components or test equipment
- connect and disconnect battery **ONLY** with ignition switched **OFF** otherwise the MPI control unit could be damaged
- if the engine must be cranked but not started (for compression testing etc.) disconnect power output stage of ignition coil and fuse **13**
- do **NOT** use battery booster longer than one minute nor should 16.5 volts be exceeded
- do **NOT** wash engine unless ignition is switched **OFF**
- disconnect **BOTH** battery terminals whenever arc or spot welding
- before towing, vehicles with a defective ignition system (or where this is suspected) must have terminal **1** (green) of the ignition coil disconnected
- do **NOT** connect a condenser of any kind to terminal **1** of the ignition coil
- when installing noise suppressors, **ONLY** use 1000 Ohms for high tension wires and 5000 Ohms for spark plug connectors
- do **NOT** replace distributor rotor (marked **R1**) with a different type
- if the vehicle is heated up (e.g. in a painting booth) do **NOT** start the engine until it has had sufficient time to return to room temperature

Note

There are a wide variety of electrical connections used on this vehicle. **ALWAYS** use the **VW 1594** adaptor kit to connect test equipment to these connections.

CAUTION

Before disconnecting a customers battery; **ALWAYS** ask for the radio code (if equipped with an anti-theft radio).

cardiagn.com

Ignition coil, checking

Power output stage (N 70) triggering, checking

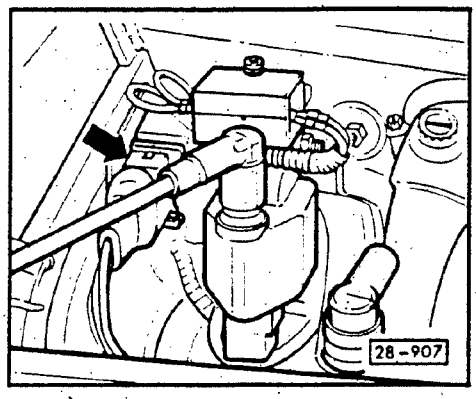

- disconnect power output stage harness connector

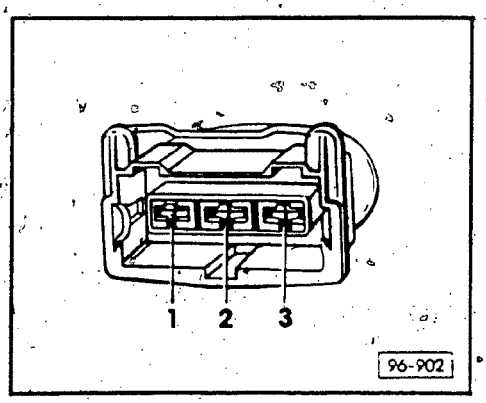

- switch multimeter **US 1119** to 20 volt range
- connect multimeter first between terminal **1** and ground then between terminals **1** and **3** after switching **ON** ignition
  - must be approximately 12 volts

If **NO**

- check for open circuit using wiring diagram, repair as necessary
- connect multimeter between terminals **2** and **3**
- crank engine
  - must be 0.2 volts minimum

If **NO**

- connect test box **VAG 1598** to control unit harness connector using adaptor cable **VAG 1598/11**
  - control unit is left disconnected

- switch multimeter **US 1119** to resistance range
- connect multimeter between terminal **2** of power output harness connector and terminal **37** of test box and check continuity or short to ground
  - must not be greater than 0.5 Ohms

cardiagn.com

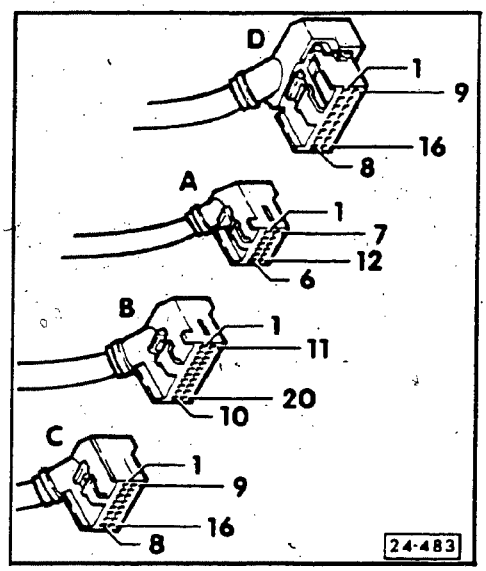

If NO

- replace or repair wiring between terminal 2 of power output stage harness connector and terminal 17 of control unit harness connector B

If wiring OK

- replace MPI control unit

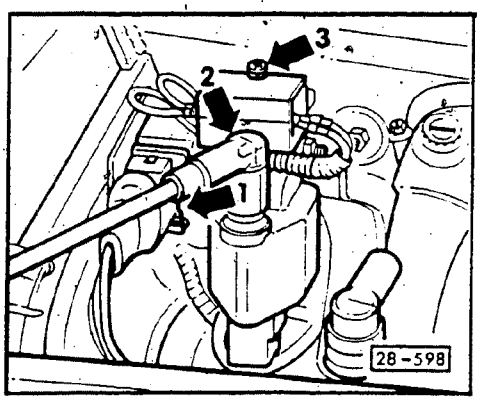

Ignition coil (N), checking

Requirement

- wiring between power output stage and ignition coil and between power output stage and ground must be OK

- disconnect power output stage harness connector 1 from ignition coil
- disconnect coil wire 2
- remove screw 3

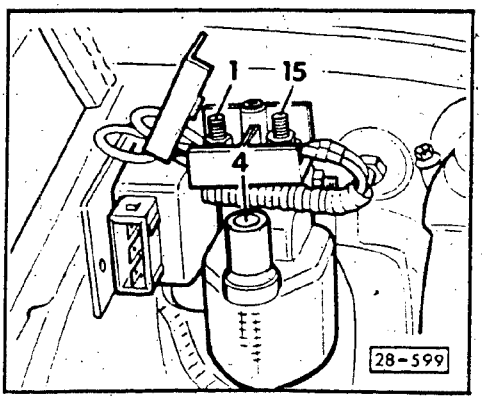

Secondary resistance, checking

- switch multimeter US 1119 to resistance range
- connect multimeter between terminals 1 and 4 of ignition coil
  - must be between 5000 and 9000 Ohms

If NO

- replace ignition coil

Primary resistance, checking

- connect multimeter between terminals 1 and 15 of ignition coil
  - must be between 0.5 and 1.5 Ohms

If NO

- replace ignition coil

cardiagn.com

If specified resistances are obtained but there is still no spark:

- replace ignition coil complete with power output stage

Note

Power output stage of ignition coil cannot be checked.

cardiagn.com

Ignition timing sender, checking

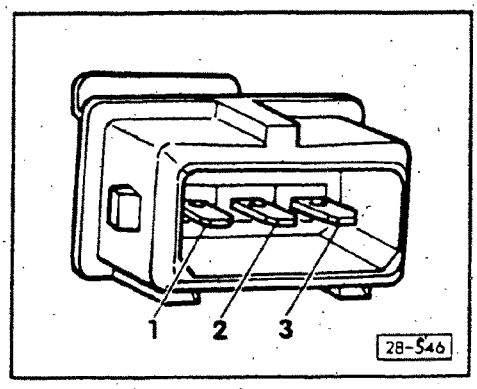

Note

For installation location see section 28-260.

- disconnect ignition timing sender harness connector (black)
- switch multimeter **US 1119** to resistance range

- connect multimeter between terminals **1** and **2** of ignition timing sender terminals
  - must be approximately 1000 Ohms

If **NO**

- replace ignition timing sender

If **YES**

- connect multimeter between terminals **1** and **3**
  - must be open (infinite Ohms)

If **NO**

- replace ignition timing sender

If **YES**

- connect multimeter between terminals **2** and **3**
  - must be open (infinite Ohms)

If **NO**

- replace ignition timing sender

If **YES**

- check wiring between ignition timing sender harness connector and MPI control unit as follows
- connect **VAG 1598** test box to MPI control unit harness connector **C** using adaptor cable **VAG 1598/11**
  - MPI control unit is left disconnected

- check wiring between following terminals for continuity or short

Ignition sender harness connector terminal number		VAG 1598 Test Box terminal number
1 (signal)	⟷	**4** (4)*
2 (ground)	⟷	**5** (5)*
3 (shield)	⟷	**6** (6)*

- must not be greater than 0.5 Ohms

* Number in parentheses is the number of the terminal in the MPI control unit harness connector **C**.

cardiagn.com

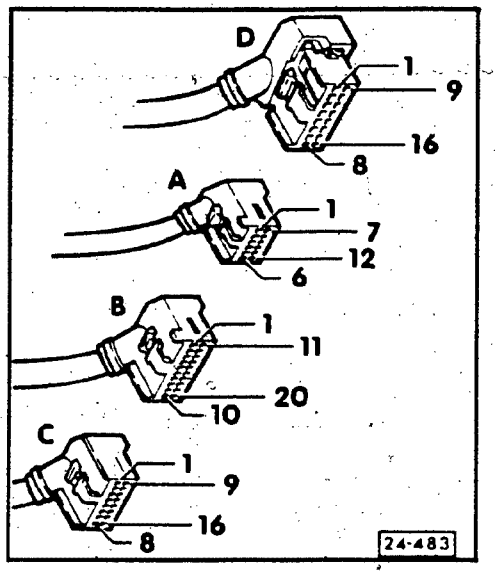

If a short or open circuit is detected between the ignition timing sender harness connector and the test box:

- replace or repair the actual wiring between control unit harness connector **C** and the ignition timing sender harness connector as necessary

If wiring **OK**

- check ignition timing sender pin on flywheel
- remove ignition timing sender mounting bracket from bell housing to expose pin on flywheel
- turn engine over slowly by hand until pin appears in opening
- check condition of pin (damaged or bent), check for secure fit, replace if necessary

If all wiring checks **OK** and pin is **OK**:

- replace MPI control unit

cardiagn.com

Coolant temperature sender (G 62), checking

- disconnect harness connector from coolant temperature sender
- switch **US 1119** multimeter to resistance range

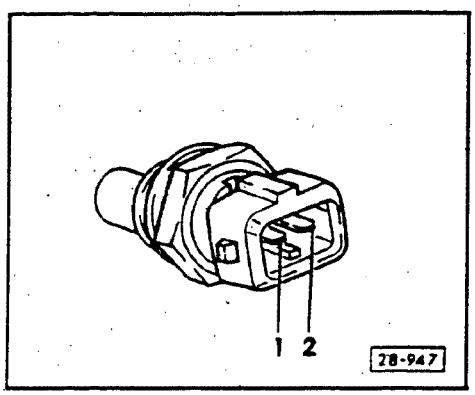

- connect multimeter between terminals 1 and **2** of coolant temperature sender
  - at approximately 20°C (68°F) coolant temperature, sender resistance must be approximately 2500 Ohms
  - at approximately 80°C (176°F) coolant temperature, sender resistance must be approximately 330 Ohms

If **NO**

- replace coolant temperature sender

If **YES**

- check wiring from sender to MPI control unit as follows:
- connect **VAG 1598** test box to MPI control unit harness connector **C** using adaptor cable **VAG 1598/11**
  - control unit is not connected during this check

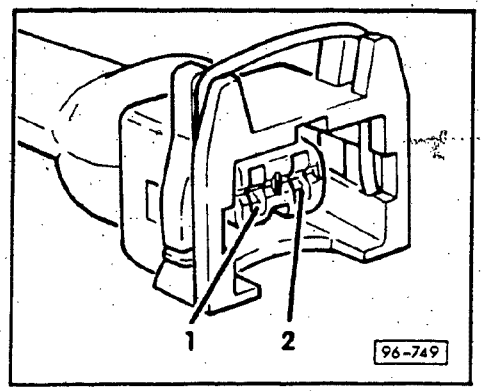

- check continuity between terminal 1 of harness connector and terminal **15** of test box
  - must not be greater than 0.5 Ohms
- check continuity between terminal 2 of harness connector and terminal **16** of test box
  - must not be greater than 0.5 Ohms
- check both wires for shorting, repair or replace as necessary

If wiring **OK** but a short or open still exists:

- replace MPI control unit

cardiagn.com

Engine speed sensor (G 28), checking

- disconnect gray harness connector from engine speed sensor (mounted on bracket on left side of engine)
- switch multimeter **US 1119** to resistance range

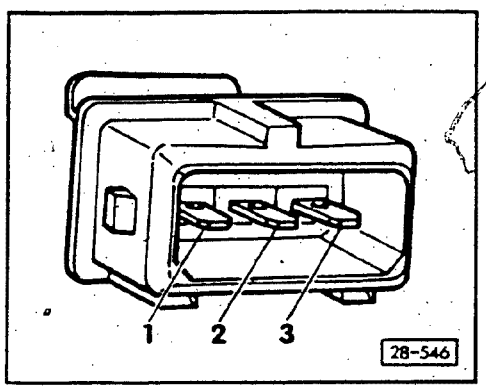

- connect multimeter between terminals **1** and **2** of speed sensor
  - must be approximately 1000 Ohms

If **NO**

- replace engine speed sensor

If **YES**

- connect multimeter between terminals **2** and **3**
  - must be open (infinite Ohms)

If **NO**

- replace engine speed sensor

If **YES**

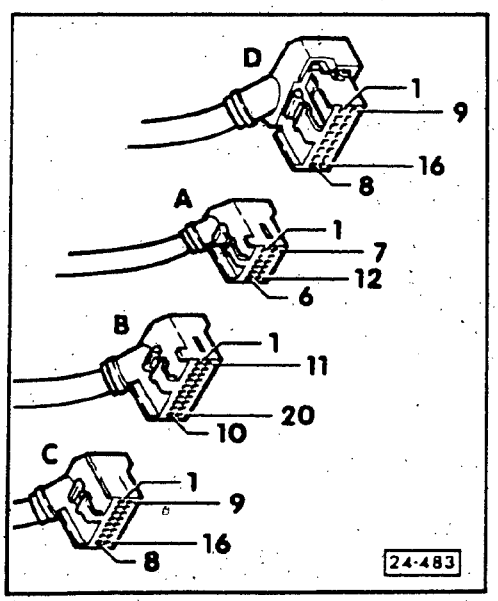

- connect **VAG 1598** test box to MPI control unit harness connector **C** using adaptor cable **VAG 1598/11**
  - control unit is not connected during this check

cardiagn.com

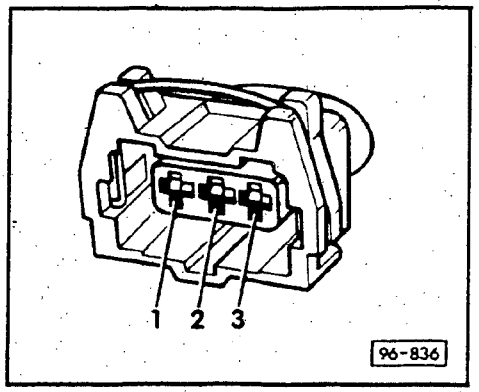

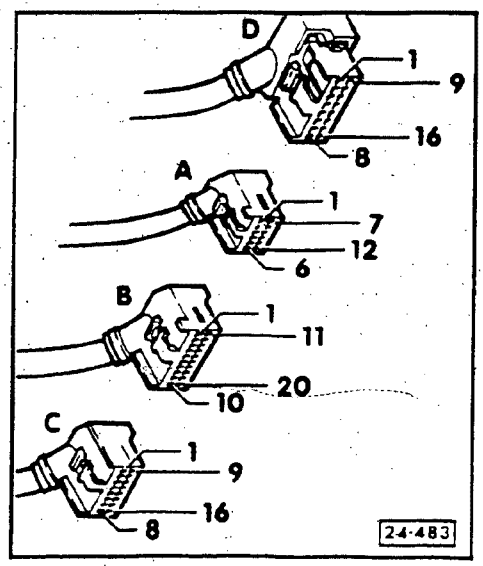

- check wiring between engine speed sensor harness connector and test box for continuity or short circuits using wiring diagram as follows:

Engine speed sender harness connector terminal		VAG 1598 test box terminal
1	⟷	1 (1)*
2	⟷	2 (2)*
3	⟷	3 (3)*

* Number in parentheses is the number of the terminal in the MPI control unit harness connector C.

If a short or open circuit is detected between the engine speed sender harness connector and the test box:

- replace or repair the actual wiring between control unit harness connector **C** and the engine speed sender harness connector as necessary

If wiring **OK**

- check teeth on flywheel ring gear as follows:
- remove engine speed sender mounting bracket which will expose a portion of the ring gear
- slowly rotate engine and observe condition of ring gear, checking for:
  - out of roundness
  - broken teeth
- replace ring gear if necessary

If ring gear **OK**:

- replace MPI control unit

cardiagn.com

MPI (Multi Point Injection) control unit, voltage supply checking

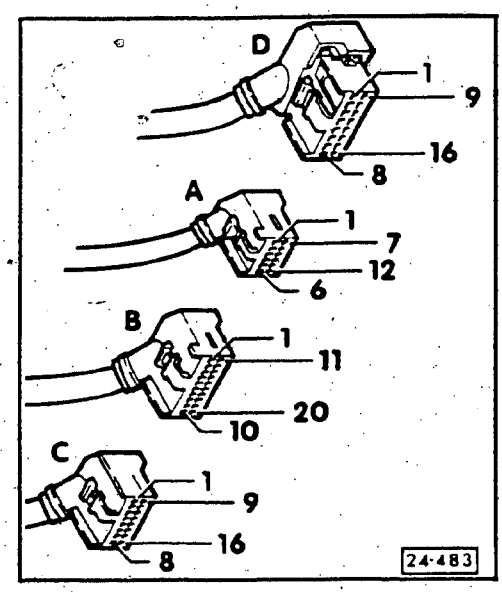

- connect **VAG 1598** test box to MPI control unit harness connector **D** using adaptor cable **VAG 1598/12**
  - control unit is not connected during this check

- switch **ON** ignition
- connect **US 1115 (VAG 1527B)** LED tester between terminal **8** (+ via ignition) of test box and terminals **1**, **2**, **3** and **16** (ground connections)
  - LED tester must light up for each measurement

If **NO**

- check for open circuit between ground wire connections at stud on intake manifold and MPI control unit harness connector **D** using wiring diagram, replace or repair as necessary

CAUTION

Inspect the grounding stud on the intake manifold for looseness, dirt and corrosion. Stud must be clean and tight. Avoid using non conductive locking compounds on the stud threads because they could prevent a good ground which in turn could introduce serious electrical problems.

Note

Terminals **1**, **2**, **3** and **16** of the harness connector correspond to terminals **1**, **2**, **3** and **16** of the test box.

cardiagn.com

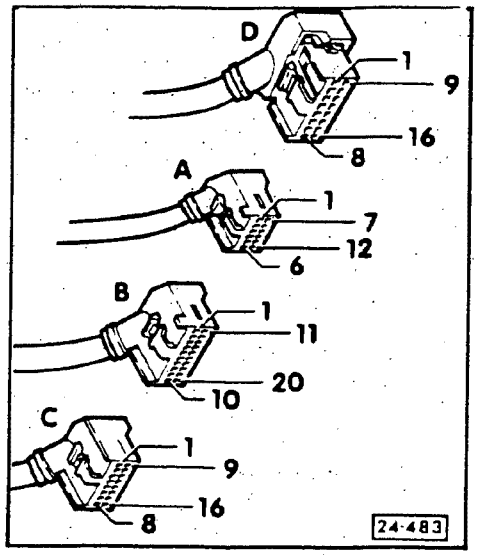

- connect **VAG 1598** test box to MPI control unit harness connector **C** using adaptor cable **VAG 1598/11**
  - control unit is not connected during this check
- connect LED tester between terminal **40** of test box and engine ground
  - LED tester must light up

If **NO**

- check for open circuit between terminal **20** of MPI control unit harness connector **B** and central electric, using wiring diagram
- repair or replace as necessary

cardiagn.com

Knock sensors (G 61 and G 66), checking

Note

The knock sensors cannot be electrically checked.

> **CAUTION**
>
> Correct knock sensor torque is critical to proper function of the knock sensors!

- must be 10 Nm (7 ft lb)

- check condition of connection at knock sensor connector and harness connector for corrosion, replace or repair as necessary
- activate Fault memory, see repair Group D2
  - if any knock sensor faults stored in memory, replace or repair as necessary

Knock sensor wires, checking

- disconnect knock sensor harness connector, see section 28-260 for location

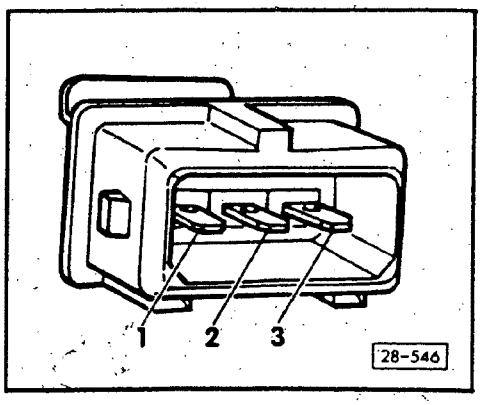

- check resistance between all 3 terminals of knock sensor
  - must be open (infinite Ohms) between all measurements

If NO

- replace knock sensor

Knock sensor wiring, checking

- connect **VAG 1598** test box to MPI control unit harness connector **B** using **VAG 1598/11** adaptor cable
  - control unit is left disconnected

- check following combinations of wires for continuity or short to one another

cardiagn.com

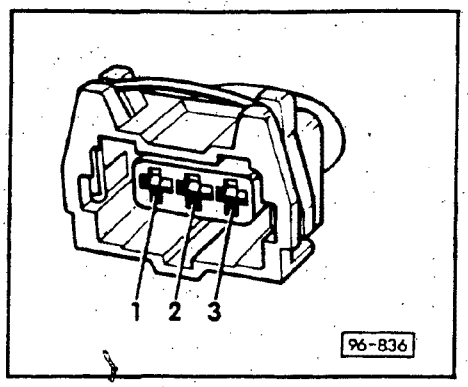

Knock sensor 1 (front, green) connector terminal number		Test box terminal number
1 (signal)	⟷	22 (2)*
2 (ground)	⟷	21 (1)*
3 (shield)	⟷	23 (3)*

Knock sensor 2 (rear, blue) connector terminal number		Test box terminal number
2 (signal)	⟷	25 (5)*
2 (ground)	⟷	24 (4)*
3 (shield)	⟷	26 (6)*

* Number in parentheses is the number of the terminal in the MPI control unit harness connector **B**.

If a short or open circuit is detected between the knock sensor harness connector and the test box:

- replace or repair the actual wiring between control unit harness connector **B** and the sensor harness connector as necessary

cardiagn.com

Hall sender (G 40), checking

Note

The Hall sender is mounted inside of the ignition distributor.

- connect test box **VAG 1598** to MPI control unit by connecting adaptor **VAG 1598/11** between MPI control unit and MPI control unit harness connector **C**
- connect LED tester **US 1115 (VAG 1527B)** to terminals **8** and **9** of test box
- activate starter for several seconds
  - LED tester must flash briefly at every second engine revolution

If NO

- switch **OFF** ignition
- disconnect Hall sender harness connector at ignition distributor
- using wiring diagram, check following wires for continuity or short to one another

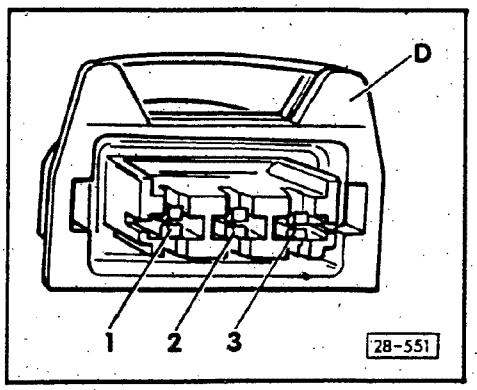

Hall sender harness connector terminal number		Test box terminal number
1 (ground)	↔	9 (9)*
2 (signal)	↔	8 (8)*
3 (plus)	↔	7 (7)*

* Number in parentheses is the number of the terminal in the MPI control unit harness connector **C**.

cardiagn.com

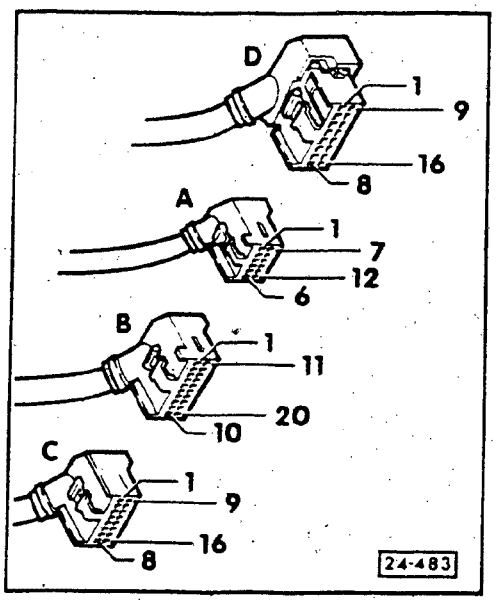

If a short or open circuit is detected between the Hall sender harness connector and the test box:

- replace or repair the actual wiring between control unit harness connector **C** and the Hall sender harness connector as necessary

If wiring **OK**

- switch **ON** ignition
- switch multimeter **US 1119** to 20 volt range
- connect multimeter between terminals **7** and **9** of test box using adaptors from **VW 1594** kit
  - must be 9 volts minimum
- connect multimeter between terminals **8** and **9** of test box
  - must be 4 volts minimum

If voltage **NOT** obtained:

- replace MPI control unit

If voltage obtained:

- replace ignition distributor/Hall sender assembly

Note

The ignition rotor is bonded to the distributor shaft and cannot be removed. If the ignition rotor is damaged, replace the distributor assembly.

cardiagn.com

Ignition distributor, installing

Note

The distributor rotor is bonded and cannot be removed.

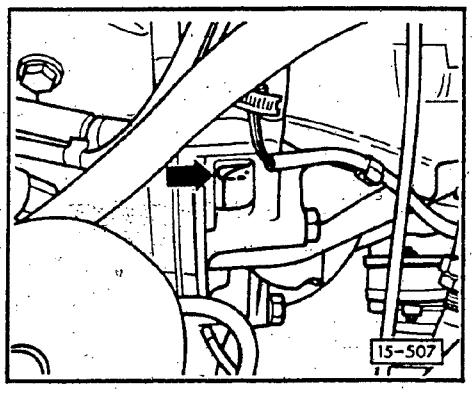

- turn crankshaft to TDC using special tool **2079**

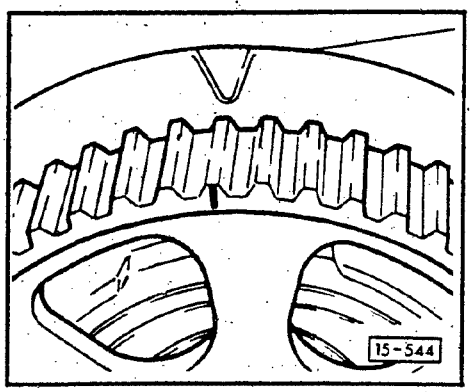

- marking on camshaft wheel must align with arrow on cylinder head cover

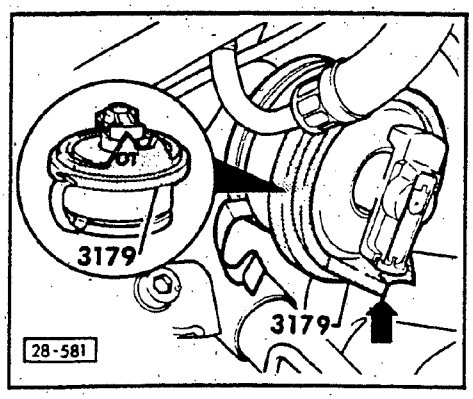

- position special tool **3179** on distributor as shown in illustration
- place center of distributor on TDC mark
- install distributor as follows
- turn distributor housing so that center of distributor rotor points exactly at TDC mark on special tool **3179**
- tighten distributor base mounting bolt
- check basic adjustment of ignition distributor

cardiagn.com

Basic adjustment

Note

The basic adjustment should only be performed if the distributor has been removed or if the test values observed in field **9** of the **VAG 1551** Diagnostic tester deviate from specification.

- connect **VAG 1551** diagnostic tester, see Repair Group D2 for additional information
- select basic setting function
- display basic setting values
- loosen ignition distributor and carefully turn as far left or right as is necessary to cause **254**, **255**, **0**, 1 and **2** to appear in field **9**, then turn distributor until a median value of 0 remains
- tighten distributor while observing field **9**
  - **0** median value must be maintained

If **NO**

- repeat adjustment and tightening procedure until **0** median value is stable

cardiagn.com

Index

4 cylinder 1988

Fault memory
- activating D2-30
- erasing D2-40
- general information D2-20

Safety precautions
- listing D2-10

4 cylinder 1988-1990

Fault code
- troubleshooting chart D2-100

Fault memory
- activating/interrogating D2-90
- erasing D2-60

Safety precautions
- listing D2-10

VAG 1551 Diagnostic Tester
- connecting D2-75
- general information D2-70

VAG 1598 Test Box
- connecting D2-85
- description D2-80

4 cylinder 1989-1990

Fault memory
- activating D2-50

★ ALL REVISED INFORMATION since last filming

cardiagn.com

Safety precautions

CAUTION

Observe the following precautions to prevent personal injury as well as possible damage to the ignition system components.

- do NOT disconnect the CIS-E Motronic control unit until at least 20 seconds after switching off the ignition
- switch **OFF** the ignition before connecting or disconnecting components or test equipment
- connect and disconnect battery **ONLY** with ignition switched **OFF** otherwise the control unit could be damaged
- if the engine must be cranked but not started (for compression testing etc.) disconnect power output stage of ignition coil
- after each start attempt wait at least one minute before trying again
- do NOT crank engine with injectors removed
- do **NOT** use battery booster longer than one minute nor should 16.5 volts be exceeded
- do **NOT** wash engine unless ignition is switched **OFF**
- disconnect **BOTH** battery terminals whenever arc or spot welding
- before towing, vehicles with a defective ignition system (or where this is suspected) must have terminal **1** (green) of the ignition coil disconnected
- do **NOT** connect a condenser of any kind to terminal **1** of the ignition coil
- when installing noise suppressors, **ONLY** use 1000 ohms for high tension wires and 5000 ohms for spark plug connectors
- do **NOT** replace distributor rotor (marked **R1**) with a different type
- if the vehicle is heated up (e.g. in a painting booth) do **NOT** start the engine until it has had sufficient time to return to room temperature

CAUTION

Before disconnecting a customers battery; **ALWAYS** ask for the radio code (if equipped with an anti-theft radio).

Note

A variety of electrical connectors are used on this vehicle, **ALWAYS** use the **VW 1594** adaptor kit to connect test instruments to these connectors.

cardiagn.com

Fault Memory, general information

The term "vehicle self-diagnosis" refers to the vehicle's capability to detect and store problems that occur during vehicle operation.

Emission related faults are stored in a Permanent Fault Memory. This fault memory must be erased after the fault has been corrected. see section D2-40.

California version ONLY:

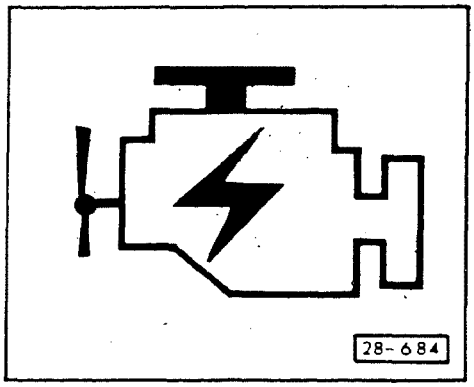

Emission related faults will be indicated by a flashing fault indicator lamp in the instrument panel insert, lasting as long as the fault is present.

- For non-emission related faults, fault storage remains even with the ignition switched **OFF**, however; when the engine is started again, temporary memory is automatically erased.

cardiagn.com

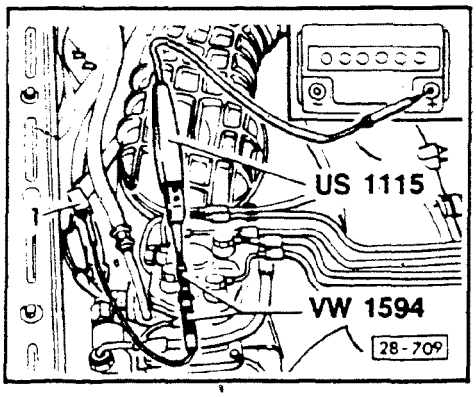

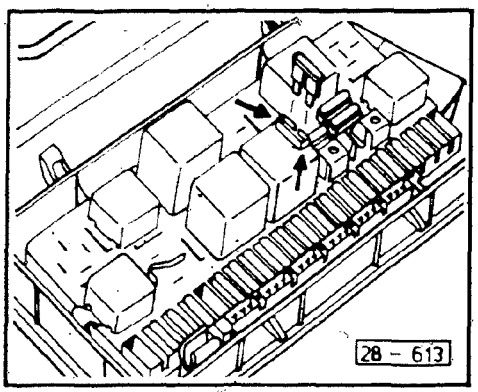

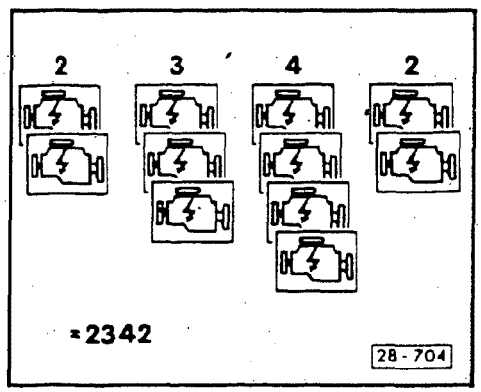

50 state version

Fault codes are displayed via LED tester **US1115** when it is connected to test connection **1** and battery plus (+) with the ignition switch **ON**.

Each fault code consists of 4 digits, with a pause of approximately 2.5 seconds between each digit displayed.

The "digits" are constructed by adding the individual blink impulses together. The entire set of blink codes is listed in section D2-100.

If you initiate the fault code display sequence it will run as follows:

1 – After a start signal (fault or test lamp **ON**) with a subsequent pause (lamp **OFF**) of about 2.5 seconds, blink code construction will begin.

2 – The code display will repeat itself over and over until you insert a fuse into the fuel pump relay again. Then, the next code (if any) will begin construction, until finally an **end of fault display sequence** code appears. This code appears as a continuous flashing that occurs in 2.5 second **ON**, 2.5 second **OFF** intervals. It is given code designation **0 0 0 0**.

Construction example of fault code **2 3 4 2**

cardiagn.com

Fault memory, activating

Check these first:

- fuse 13, 14, and 28 **OK**
- ground connection to intake manifold **OK**
- coolant temperature 80°C (176°F) minimum
- engine speed must exceed 3000 RPM (at least once)
- gas pedal must momentarily be completely depressed then the engine must idle for at least another 2 minutes

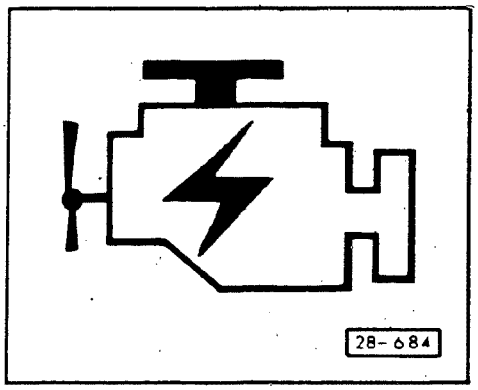

California version (in addition to above)

- fuse **12 OK**
- fault lamp **OK** (in instrument panel insert)

Note

If the Permanent Fault Memory was erased or if the Temporary Memory erases by starting the engine, take a 5 minute test drive before activating the Fault Memory. If the engine does **NOT** start, turn the starter over for about 6 seconds.

Fault memory can be activated with the engine running as well as when the engine is stalled (with the ignition switched **ON**).

cardiagn.com

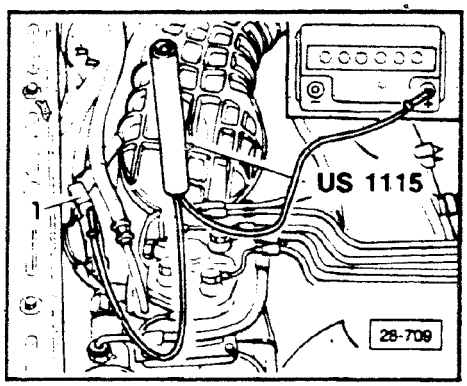

50 State version

- connect LED tester **US 1115** to test connector **1** and battery plus (+). The **US 1115 MUST** light up
- switch **ON** ignition; but do **NOT** activate starter

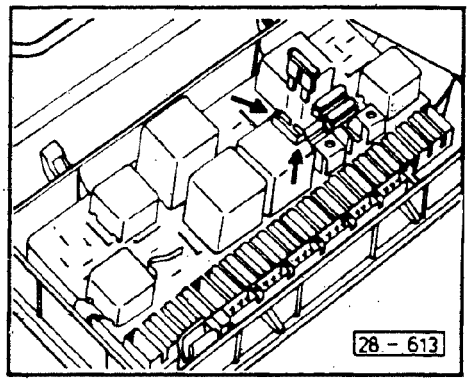

- insert spare fuse into fuel pump relay for at least 4 seconds, then remove fuse
  - the steady lighting of the **US 1115** must turn into flashing
- count flash impulses and record
- switch to the next step by again inserting a fuse into the fuel pump relay
- repeat test until the flash code **end of fault output** appears (Flash Code **0 0 0 0**)
- look up faults using chart , section D2-100, and repair as necessary.

- after faults have been corrected, erase both fault memories
  - erase Permanent Fault Memory – see section D2-40.
  - erase secondary fault memory by starting the engine
  - drive vehicle again for 5 minutes then recheck fault memory

Note

If there are no more faults stored but the problems continue, perform an electrical check, see repair group 25.

cardiagn.com

Permanent fault memory, erasing

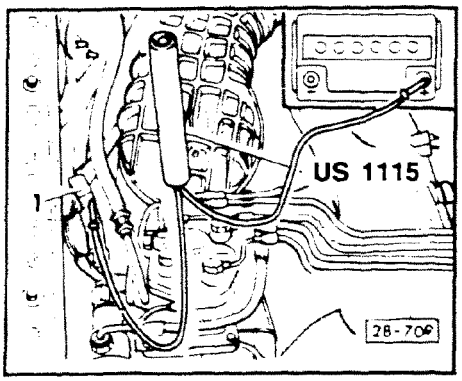

- connect LED tester **US 1115** to test connector 1 and battery (+)

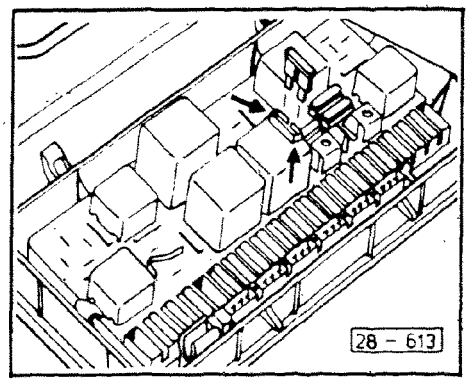

- switch ignition **OFF**
- insert fuse in top of fuel pump relay
- switch ignition **ON**
  - LED tester **US 1115** must light up
- remove fuse after at least 4 seconds
  - lamp must switch off briefly then begin displaying flash code **0 0 0 0**
- insert fuse again for at least 10 seconds then remove again

If the test lamp lights up and stays **ON**: fault memory has been successfully erased.

cardiagn.com

Fault memory, activating

CAUTION

Starting with model year 1989:
diagnostic test connectors (for fault code activation and display) were installed in the driver's side footwell.

It will no longer be possible to activate the fault memory by means of the fuel pump relay on these vehicles.

Repair procedures that refer to fault code activation via the fuel pump relay **remain the same** with the exception that the diagnostic connectors outlined on this page **MUST** be used **INSTEAD** of the fuel pump relay.

The instrument panel fault lamp will remain functional **ONLY** in vehicles with OBD capability.

The fault lamp has been deleted from "**49 States**" vehicles.

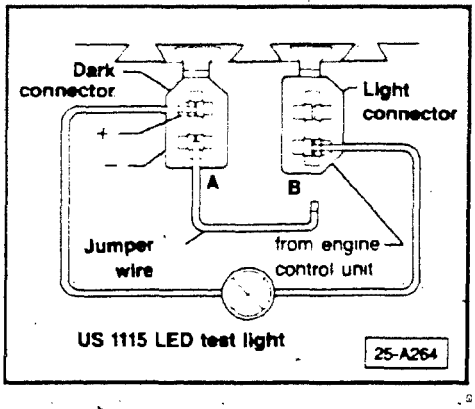

US 1115 LED test light

Dark colored connector **A**: contains **two** terminals; power (which is protected via fuse **21**) and ground (observe the shape: angled corners on the short side).

Light colored connector **B**: contains a **single** terminal from the engine control unit (observe the shape: angled corners on the long side).

Use the **Diagnostic** connectors to display the contents of the fault memory (as well as System Output checks, where installed) by using the US 1115 LED tester as follows:

- connect positive terminal of **US 1115** LED tester to the positive terminal in connector **A**
- connect negative terminal of **US 1115** LED tester to the (only) terminal in connector **B**
- connect one end of a jumper wire to the negative terminal in connector **A**, touch the other end to the terminal in connector **B** for at least 4 seconds
  - fault codes will now be displayed (as flashing) by the **US 1115**

cardiagn.com

To advance to the next fault code in the sequence:

- touch the free end of the jumper wire to the terminal in connector **B** again for a minimum of four seconds

Note

This procedure achieves the same result as installing a fuse in the fuel pump relay for 4 seconds as in the 1988 fault code system.

cardiagn.com

Fault memory, erasing (using VAG 1551 in mode 2, blink code output)

- connect **VAG 1551** tester (if not already connected, see section D2-75)
  - display should then alternate between the two following displays:

    VAG – SELF-DIAGNOSIS **HELP**
    1 – Rapid data transmission

    VAG – SELF-DIAGNOSIS **HELP**
    2 – Blink code output

- press **2** to select Blink code output
  - display will appear as follows:

    Blink code output **HELP**

Initiate with the ➡ button

- depress ➡ button
  - display will appear as follows:

    *** Blink code output will be initiated!**

- press ➡ button and hold until following display appears

Blink code output, continuous short circuit on permanent ground exciter wire

- switch **ON** ignition and push ➡ button briefly
  - following display will appear:

    Blink code 0000

    End output

- press ➡ button
  - ignition still switched **ON** for at least 5 seconds
  - **VAG 1551** connected

  Fault memory is erased.

cardiagn.com

VAG 1551 tester, general information

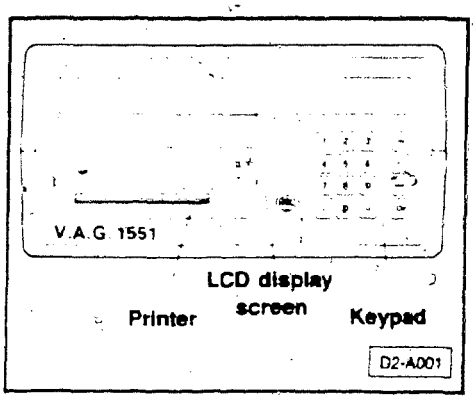

The **VAG 1551** tester is a diagnostic tool that reads system faults recorded by control units equipped with permanent fault memories.

VAG 1551 tester, features and operation

Cancel (or Clear) key

- push this key to cancel an input or to stop the program from running

Q (or Enter) key

- push this key after making inputs
- push this key anytime a **Q** is displayed in the upper right hand corner of the LCD display

Arrow (or Run) key

- push this key to advance to the next step in your sequence
- push this key anytime the ➡ is displayed in the upper right hand corner of the LCD display

Help key

- pushing this key also selects the printer function
- push this key to obtain additional operating instructions or explanations of tester functions
- push this key to obtain hints for possible problems when the **VAG 1551** does not respond the way you think it should
- push this key to obtain a list of the Address Words and Function Words to supply the **VAG 1551** when it asks for them

Print key

- push this key whenever you want a printed copy of the information in the display window

Note

The printer is **ON** whenever the LED in the button is lit.

Printer paper advance key

- push this key to advance the paper **BEFORE** you tear it off of the tester

cardiagn.com

VAG 1551 diagnostic tester, connecting

Model year 1988:

- remove central electric cover
- connect **VAG 1551** to fuel pump relay (**arrow**) using adaptor **VAG 1551/2**, connect single wire on adaptor to battery positive (+)

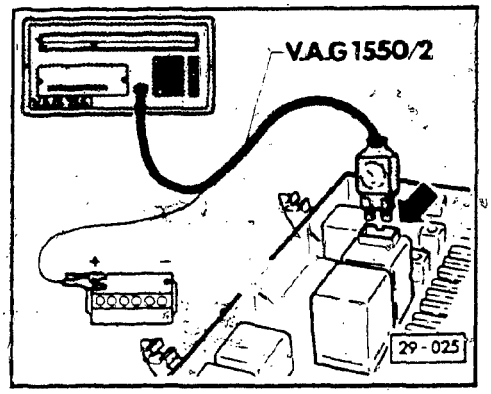

Model years 1989 and 1990:

- connect **VAG 1551** diagnostic tester to diagnostic connectors (above pedal (s) in drivers side footwell) using **VAG 1551/1** connector harness as follows:
  - **BLACK** wire to **BLACK** diagnostic connector
  - **WHITE** wire to **BROWN** diagnostic connector
  - **BLUE** wire – **NOT** connected

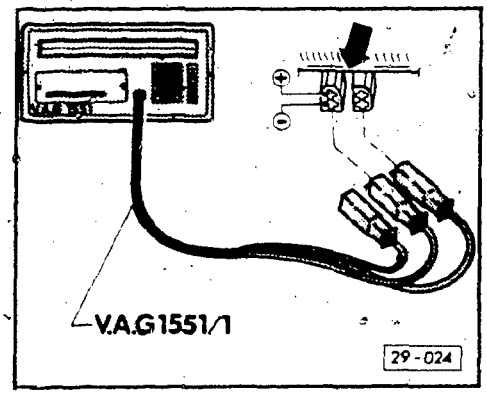

Note

Voltage supply is via fuse **21**.

cardiagn.com

VAG 1598 Test box, description

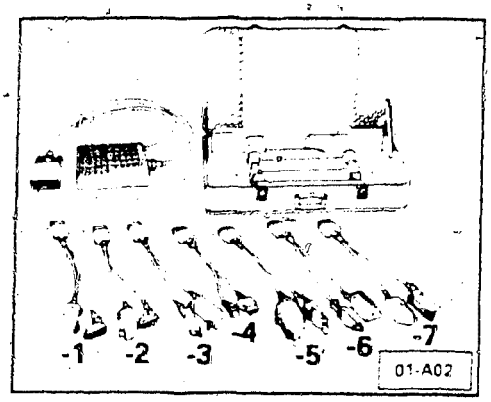

The **VAG 1598** test box and adaptor set was introduced in May of 1989. It consists of a main harness with test box (that universally connects to all of the adaptor harnesses) and a set of adaptor harnesses. A hardshell storage case is provided to protect the set when not in use.

The **VAG 1598** is used in conjunction with several other pieces of test equipment consisting of:

- **US 1119** multimeter
- **US 1115** LED tester
- **VW 1594** adaptor wire kit

Note

New adaptor harnesses will be made available for the **VAG 1598** in the future as new applications require them.

VAG 1598 advantages:

- the fragile terminals in the control unit connector no longer risk damage from test leads and probe connections. Connections formerly made on the control unit connector are now made on the **VAG 1598** test box which has large conveniently accessible terminals
- raised, highly visible numbers on the test box eliminate any uncertainty as to connector terminal numbering
- certain components (e.g. Hall sender) can now be checked dynamically (engine running)
- electrically checking miniature and unusual size terminals is now made possible regardless of terminal size
- standard size adaptors are used to make and test all connections resulting in dependable, accurate measurements

cardiagn.com

VAG 1598 Test box, connecting

Example: CIS-E Motronic Fuel/Ignition system control unit

- select the appropriate adaptor harness from the list (based on the connector you wish to connect to) for this example use adaptor harness **VAG 1598/2**
- connect adaptor harness **VAG 1598/2** to main test box harness by joining the two rectangular connectors, then tighten via knobs on main harness connector

Note

The rectangular connector which is on every adaptor cable can only be connected one way. Examine the connector and you will see where the threaded connectors of the test box harness attach to the adaptor connector.

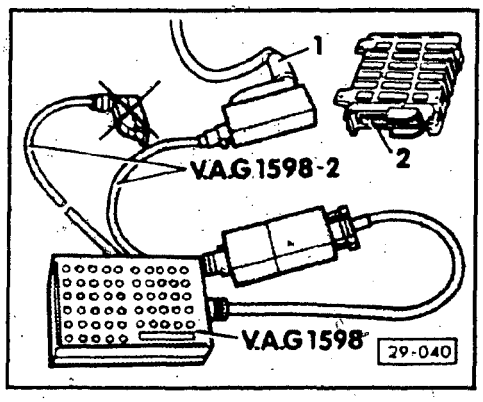

- disconnect CIS-E Motronic control unit harness connector **1** from control unit
- connect test adaptor **VAG 1598/2** male connector to control unit harness connector **1**

Note

In this example the wiring up to the control unit is being checked statically, making it un-necessary to connect the control unit to the adaptor harness; however, for dynamic checks you will have to make this connection.

cardiagn.com

Fault memory, activating/interrogating (using VAG 1551)

Requirements

- fuses **13**, **21**, **27**, and **28** must be **OK**
- A/C switched **OFF**
- engine ground connection (near ignition distributor) **OK**

Notes

The fault memory must first be interrogated before it can be erased.

Using the **VAG 1551** tester eliminates the possibility of interpretive or written errors because the faults can be both displayed and printed by the tester.

If engine **CANNOT** be started:

- connect **VAG 1551** tester (see section D2-75)
- operate starter for about 6 seconds but do **NOT** switch ignition **OFF** afterwards
- activate fault memory (see next page)

If engine **CAN** be started:

- test drive vehicle for at least 5 minutes

During test drive

- coolant temperature must reach 80°C (176°F) minimum
- engine speed must exceed 3000 rpm
- accelerator pedal must be fully depressed at least once

- after test drive, allow engine to idle for at least 2 minutes
- switch **OFF** ignition
  - engine must **NOT** be re-started

> **CAUTION**
>
> A portion of the fault memory is erased when the engine is started. Adhere to the sequence in the following procedure so that **ALL** faults are recognized. Do **NOT** skip any of the steps.

cardiagn.com

Activating fault memory

- connect **VAG 1551** tester, see section D2-75
- switch **ON** ignition but do **NOT** start engine
  - display should then alternate between the two following displays:

VAG – SELF-DIAGNOSIS HELP
1 – Rapid data transmission

VAG – SELF-DIAGNOSIS HELP
2 – Blink code output

- press **2** to select Blink code output
  - display will appear as follows:

  Blink code output HELP
  Initiate with the ➡ button

- depress ➡ button
  - display will appear as follows:

  *** Blink code output will be initiated!**

- press ➡ button and hold until following display appears

Blink code output, continuous short circuit on permanent ground exciter wire

Note

The asterisk in the upper left hand corner of the display will now start to flash. The asterisk flashes just as LED tester **US 1115** would if it were connected to the system instead.

The **VAG 1551** will count the number of flashes and convert them into a four digit fault code.

If **NO** faults are stored in the memory, the following display will appear:

Blink code 4444 ➡
No fault recognized

- switch **OFF** ignition but do **NOT** erase fault memory

cardiagn.com

If a fault in the system is found, the **VAG 1551** will display the appropriate fault code, a description of the fault and an alphanumeric code for the faulty component.

This alphanumeric code is the same code used on the wiring diagrams and in the troubleshooting tables. For example:

Blink code 2232
Air flow sensor – G70/G19

- press the ➡ button to advance to the next fault (if any)
  - display will appear as follows:

Blink code XXXX
Blink code signal is continued

If another fault is found it will be displayed as before.

If **NO** additional faults are found, the display will appear as follows:

Blink code 0000 ➡
Output end

If the vehicle being tested features more control units with fault memory, the blink code of the next control unit can be started by pressing the button.

If no other control units are to be tested, the following display will appear:

Blink code output ➡
is ended!

- switch **OFF** ignition
- press **C** button once
- repair the faults and then erase the fault memory, see section D2-60

- take vehicle for another road test (minimum of 5 minutes)
- check fault memory again to verify that **ALL** faults have been corrected

cardiagn.com

Fault code, troubleshooting chart

Code	Location of fault	Problem	Solution
1 1 1 1	control unit	control unit (internal)	replace control unit, see Repair Group 25
2 1 1 3	no speed signal from Hall sensor, 28.32 (Group 28) or false signal from potentiometer	Hall sensor defective, disconnected wire sensor plate/adjustment, air flow sensor lever hard to move/hangs up	check Hall sensor, see Repair Group 28 check wires check adjustment, see Repair Group 25 check adjustment of lever, see Repair Group 25
2 1 2 1	idle switch	idle switch defective, (always closed), wire has a short	check idle switch, see Repair Group 25 check wire
2 1 2 3	full throttle switch	full throttle switch defective (always closed), wire has a short	check full throttle switch, 25.109 check wires
2 1 4 1	knock regulation at the control limit *(fault lamp lights up during maximum ignition retard adjustment)	engine vibrates, knocks fuel octane too low ignition timing point adjusted wrong knock sensor wire shielding damaged	compression test, check injection system, see Repair Group 25 change fuel to a higher octane adjust timing, see Repair Group 25 check knock sensor wires
2 1 4 2	knock sensor *(fault lamp lights up continuously until engine is shut off)	disconnected wire or short in sensor wire defective knock sensor	check wire between knock sensor and control unit replace knock sensor
2 2 3 1	idle stabilization control limits exceeded	basic adjustment of throttle intake system leaks ignition timing incorrectly adjusted	perform basic adjustment of throttle, see Repair Group 25 check intake system for leaks adjust timing, check idle, see Repair Group 25
2 2 3 2	potentiometer on airflow sensor	disconnected wire or short between control unit and potentiometer	check potentiometer, see Repair Group 25

cardiagn.com

Code	Location of fault	Problem	Solution
2 3 1 2	coolant temperature sensor	disconnected wire or short in sensor line, temperature sensor defective	check wires check temperature sensor
2 3 4 1	oxygen regulation at the control limit *(fault lamp lights up, if fault occurs for at least 2 minutes)	CO content not within specifications, oxygen sensor grounded cold start valve leaks Carbon canister valve open constantly intake system leaks	check CO content, see Repair Group 25 check oxygen sensor wire per wiring diagram, check oxygen sensor control, see Repair Group 25 check cold start valve, see Repair Group 25 evaporative system checking, see Repair Group 20 check intake system for leaks
2 3 4 2	oxygen sensor does not control *(fault lamp lights up)	disconnected wire to oxygen sensor or defective oxygen sensor	check oxygen sensor control, see Repair Group 25
2 3 4 3	mixture control, **lean** limit exceeded	idle **NOT OK**	check idle, see Repair Group 25
2 3 4 4	mixture control, **rich** limit exceeded	intake air system leaks, idle **NOT OK**	check intake system for leaks check idle, see Repair Group 25
4 4 3 1	idle stabilizer valve	disconnected wire, defective idle stabilizer valve	check wires replace stabilizer valve, replace control unit, see Repair Group 25
4 4 4 4	no faults stored in memory	—	—

CAUTION

After all test and adjustment work has been performed, erase fault memory, section D2-30.

cardiagn.com

Index

5-cylinder m.y. 1988

Fault codes
- troubleshooting chart **D2-200**

Fault memory
- activating **D2-120**
- activating/interrogating using **VAG 1551** Diagnostic Tester **D2-180**
- erasing using **VAG 1551** Diagnostic Tester **D2-190**
- general information **D2-110**

Output checks
- chart **D2-130**

Permanent fault memory
- erasing **D2-125**

Safety precautions
- chart **D2-105**

VAG 1551 Diagnostic Tester
- connecting **D2-170**
- general information **D2-140**

VAG 1598 Test Box
- connecting **D2-155**
- description **D2-150**

5-cylinder m.y. 1989

Fault codes
- troubleshooting chart **D2-200**

Fault memory
- activating **D2-160**
- activating/interrogating using **VAG 1551** Diagnostic Tester **D2-180**
- erasing using VAG 1551 Diagnostic Tester **D2-190**

Output checks
- chart **D2-130**

Saftey precautions
- chart **D2-105**

VAG 1551 Diagnostic Tester
- connecting **D2-170**
- general information **D2-140**

VAG 1598 Test Box
- connecting **D2-155**
- description **D2-150**

5-cylinder starting m.y. 1990

Fault codes
- troubleshooting chart **D2-220**

Fault memory
- activating **D2-160**
- activating/interrogating using **VAG 1551** Diagnostic Tester **D2-180**
- erasing using **VAG 1551** Diagnostic Tester **D2-190**

Output checks
- using **VAG 1551** Diagnostic Tester **D2-210**

Safety precautions
- chart **D2-105**

VAG 1551 Diagnostic Tester
- connecting **D2-170**
- general information **D2-140**

VAG 1598 Test Box
- connecting **D2-155**
- description **D2-150**

cardiagn.com

Safety precautions

CAUTION

Observe the following precautions to prevent personal injury as well as possible damage to the ignition system components.

- do NOT disconnect the CIS-E III control units until at least 20 seconds after switching off the ignition
- switch **OFF** the ignition before connecting or disconnecting components or test equipment
- connect and disconnect battery **ONLY** with ignition switched **OFF** otherwise the control unit could be damaged
- if the engine must be cranked but not started (for compression testing etc.) disconnect power output stage of ignition coil
- after each start attempt wait at least one minute before trying again
- do NOT crank engine with injectors removed
- do **NOT** use battery booster longer than one minute nor should 16.5 volts be exceeded
- do **NOT** wash engine unless ignition is switched **OFF**
- disconnect **BOTH** battery terminals whenever arc or spot welding
- before towing, vehicles with a defective ignition system (or where this is suspected) must have terminal **1** (green) of the ignition coil disconnected
- do **NOT** connect a condenser of any kind to terminal **1** of the ignition coil
- when installing noise suppressors, **ONLY** use 1000 ohms for high tension wires and 5000 ohms for spark plug connectors
- do **NOT** replace distributor rotor (marked **R1**) with a different type
- if the vehicle is heated up (e.g. in a painting booth) do **NOT** start the engine until it has had sufficient time to return to room temperature

CAUTION

Before disconnecting a customers battery; **ALWAYS** ask for the radio code (if equipped with an anti-theft radio).

Note

A variety of electrical connectors are used on this vehicle, **ALWAYS** use the **VW 1594** adaptor kit to connect test instruments to these connectors.

cardiagn.com

Fault memory, general information

There are **two** versions of CIS-E III fault memory:

49 state version

distinguishing feature:

Temporary fault storage which is erased each time the ignition is switched **OFF**.

You can identify **49 state** versions by control unit part numbers:

49 state fuel injection control unit:

443 906 264 **C**

49 state ignition control unit:

443 907 397 **C**

California version

distinguishing feature:

Permanent fault storage which is **not** erased each time the ignition is switched **OFF**.

Operational characteristics:

The **California** version causes the fault warning light to come **ON** whenever an emissions related fault occurs. The light remains **ON** while you drive for as long as the fault exists.

The light will go out after the problem is repaired or no longer exists. The fault code, however, will remain in memory until intentionally erased, section D2-125.

If **NON**-emission related faults occur, they will be stored in fault memory, but the fault warning light will **NOT** come on until you activate the fault display.

You can identify **California** versions by control unit part numbers:

California fuel injection control unit:

443 906 264 **B**

California ignition control unit:

443 907 397 **E**

cardiagn.com

CAUTION

None of the control units can be interchanged between the two versions.

- display operation is the same for both versions
- control unit location is the same for either version

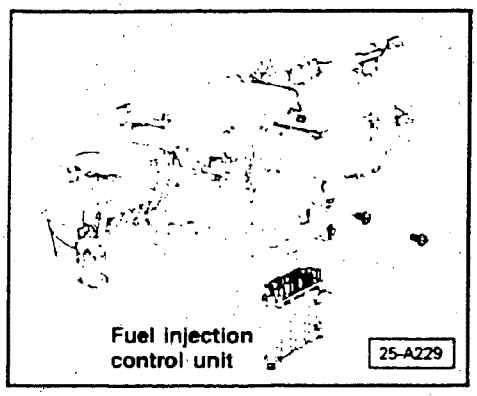

Fuel injection control unit, location

Located behind the A/C evaporator in the passenger footwell.

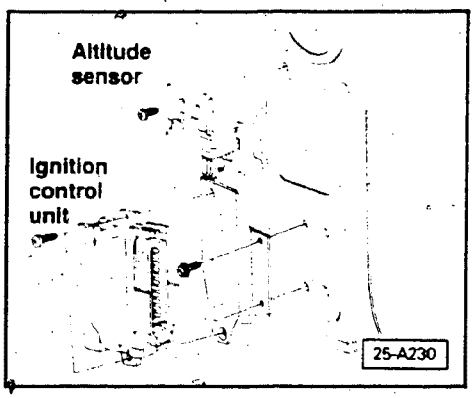

Ignition control unit, location

Located behind the right front kick panel in the A-pillar.

Note

Each control unit can store faults in the system as they occur. Stored faults can be displayed by activating the fault warning lamp in the instrument cluster.

cardiagn.com

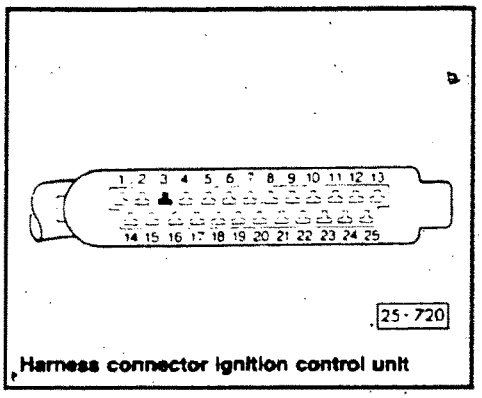

Harness connector ignition control unit

If the fault lamp does **NOT** light up with "ignition **ON**," but only after bridging the top of the fuel pump relay terminals, check wiring between terminal **3** of electronic ignition control unit and terminal **13** of fuel injection control unit according to wiring diagram.

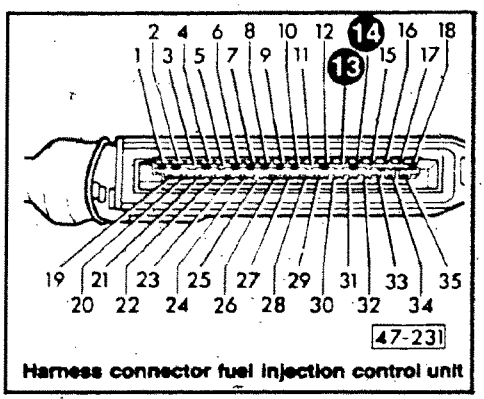

Harness connector fuel injection control unit

If **NO** break in wiring

- connect LED tester **US 1115** between terminals **13** and **14** of the disconnected fuel injection control unit harness connector using **VW 1594** adaptor
  - each time the ignition is switched **ON**, the LED tester must blink approximately 3 times

If **NO**

- replace electronic ignition control unit.

Note

If you replace the control unit, check the ignition timing. Adjust if necessary. (see repair Group 28)

If the fault warning blinks while driving, knock regulation is at its maximum control limit.

cardiagn.com

Fault memory, activating

When a problem in either fuel or ignition systems occurs while driving the car, the fault warning lamp will light up.

When the engine is stopped (ignition turned off) the fault warning lamp will be off and the fault memory erased (49 states only).

To bring the fault warning back, drive the car for at least five minutes. Engine speed must be up to 3000 RPM and throttle opened fully, once (49 states only).

Use the fault memory system for troubleshooting even if fault warning light did NOT come on. Always start checking engine performance by going through the following procedure.

Fault memory, ignition system, checking

Check these first:

- Fault warning lamp **OK**
- Fuel pump relay **OK**
- Fuses **13**, **24** and **28 OK**
- Fuse **19 OK** (California only)
- A/C switched **OFF**
- Ground connection between engine compartment, intake manifold, ignition coil power stage and compartment **OK**

■ drive car for at least five minutes

cardiagn.com

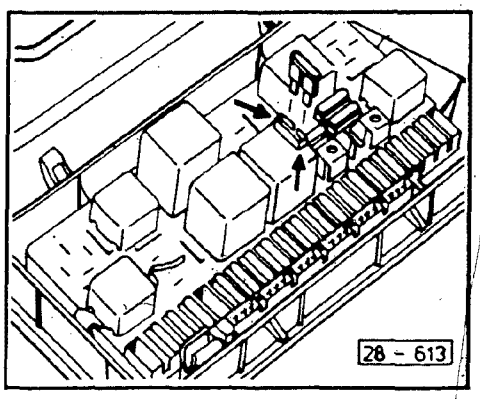

Do NOT turn the ignition off.

- insert any spare fuse in the fuel pump relay for at least four seconds, then remove fuse

  Fault warning lamp in instrument cluster will flash a code consisting of groups of one, two, three or four flashes

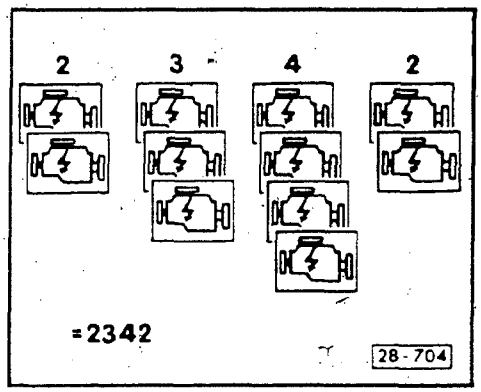

- Count the flashes and write them down. If you miss the sequence the first time, the code will repeat until you are ready for the next code. See example of **2342**

  If you get a **4444** signal it means that no faults were stored in the ignition control unit

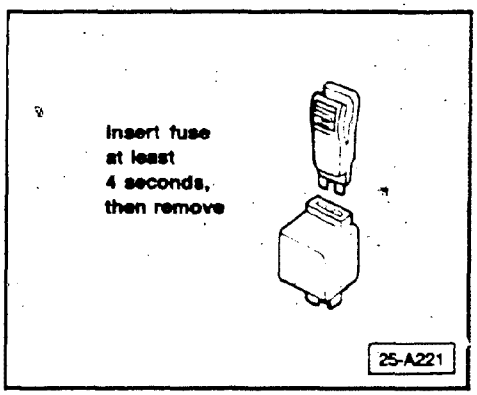

Note

You will read faults in two steps: first for the ignition system, second for the fuel injection system.

- insert fuse again in fuel pump relay for four seconds and write down next code
- Repeat until you see a signal that comes on the 2.5 seconds and then goes off for 2.5 seconds repeatedly. Write this code down as 0000. This is the end of the ignition system check.

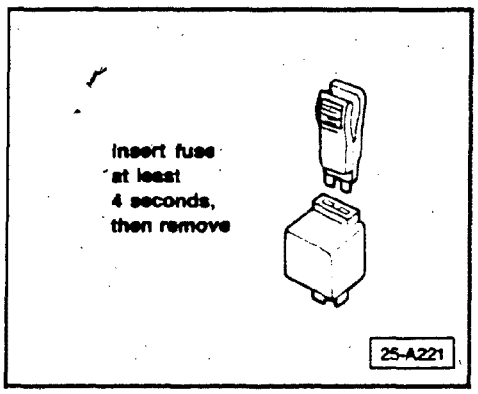

Fault memory, fuel injection system, checking

When you have finished checking the ignition system for possible codes, you can begin checking the fuel injection system.

Note

The engine idle speed may increase slightly when the fuel injection signal is activated.

- insert any spare fuse in fuel pump relay for at least four seconds, then remove fuse

cardiagn.com

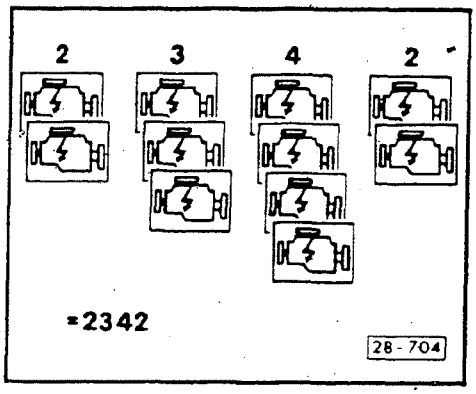

Fault warning lamp in instrument cluster will blink a code consisting of groups of one, two, three or four flashes

- Count the blinks and write them down. If you miss the sequence the first time, the code will repeat until you are ready for the next code. See example **2342**

  If you get a **4444** signal it means that no faults were stored in the fuel injection control unit memory

- Repeat until you see a signal that comes on for 2.5 seconds and then goes off for 2.5 seconds repeatedly. Write this code down as **0000.** This is the end of the fuel injection system check

cardiagn.com

Permanent fault memory, erasing

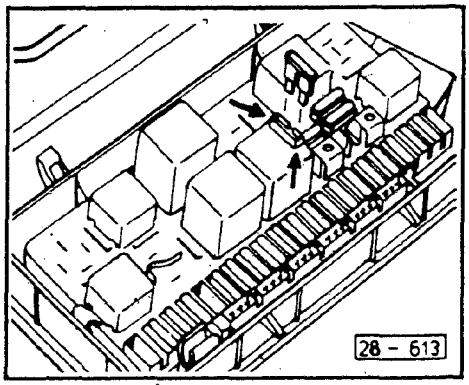

To erase the contents of the fault memory on **California** version **ONLY**:

- insert fuse in top of fuel pump relay with ignition **OFF**
- turn ignition **OFF**
- wait at least 4 seconds then remove fuse
- repeat this step 3 times until indicator flashes code **4443**

  - a signal should appear that comes on for 2.5 seconds and then goes off for 2.5 seconds, repeatedly

- reinsert fuse in top of fuel pump relay
- wait at least **TEN** seconds, then remove fuse

  - if the fault warning lamp now stays on continuously, you have successfully cleared the fault memory

cardiagn.com

Code	Component checked	Operating cycle
4341	Differential pressure regulator	10mA current flow to regulator when full throttle switch is closed
4343	Carbon canister shut-off solenoid	Clicks **ON** and **OFF** when full throttle switch is closed
4431	Idle stabilizer valve	Clicks when full throttle switch is closed
4443	Cold start valve	Clicks **ON** and **OFF** for a maximum of 10 seconds when full throttle switch is closed

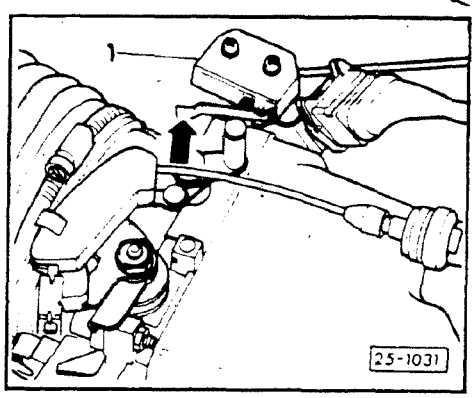

Output checks

Note

The control units can also generate output signals to check the operation of certain components. By inserting the fuse in the top of the fuel pump relay with the ignition switched **OFF**, the system to the output checks.

The system will now generate four separate output signals, each one in a separate step, when the ignition is turned **ON**. If the starter is operated of the engine has been run, the system will switch to the input checks.

The fuse **must** be inserted before the ignition is switched **ON**.

- to switch from one step to the next, insert the fuse into the top of the fuel pump relay

Note

The fault warning light will then flash a code to indicate which test step the system is in.

Output signals will only be generated when the full throttle switch is closed (**arrow**).

If a problem is found, first check the components with multimeter **US 1119** for an open or short circuit, then check the wiring.

cardiagn.com

VAG 1551 tester, general information

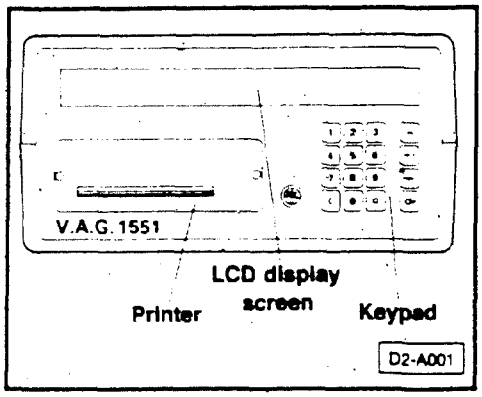

The **VAG 1551** tester is a diagnostic tool that reads system faults recorded by control units equipped with permanent fault memories.

VAG 1551 tester, features and operation

Cancel (or Clear) key

- push this key to cancel an input or to stop the program from running

Q (or Enter) key

- push this key after making inputs
- push this key anytime a **Q** is displayed in the upper right hand corner of the LCD display

Arrow (or Run) key

- push this key to advance to the next step in your sequence
- push this key anytime the ➡ is displayed in the upper right hand corner of the LCD display

Help key

- pushing this key also selects the printer function
- push this key to obtain additional operating instructions or explanations of tester functions
- push this key to obtain hints for possible problems when the **VAG 1551** does not respond the way you think it should
- push this key to obtain a list of the Address Words and Function Words to supply the **VAG 1551** when it asks for them

Print key

- push this key whenever you want a printed copy of the information in the display window

Note

The printer is **ON** whenever the LED in the button is lit.

Printer paper advance key

- push this key to advance the paper **BEFORE** you tear it off of the tester

cardiagn.com

VAG 1598 Test box, description

The **VAG 1598** test box and adaptor set was introduced in May of 1989. It consists of a main harness with test box (that universally connects to all of the adaptor harnesses) and a set of adaptor harnesses. A hardshell storage case is provided to protect the set when not in use.

The **VAG 1598** is used in conjunction with several other pieces of test equipment consisting of:

- **US 1119** multimeter
- **US 1115** LED tester
- **VW 1594** adaptor wire kit

Note

New adaptor harnesses will be made available for the **VAG 1598** in the future as new applications require them.

VAG 1598 advantages:

- the fragile terminals in the control unit connector no longer risk damage from test leads and probe connections. Connections formerly made on the control unit connector are now made on the **VAG 1598** test box which has large conveniently accessible terminals
- raised, highly visible numbers on the test box eliminate any uncertainty as to connector terminal numbering
- certain components (e.g. Hall sender) can now be checked dynamically (engine running)
- electrically checking miniature and unusual size terminals is now made possible regardless of terminal size
- standard size adaptors are used to make and test all connections resulting in dependable, accurate measurements

cardiagn.com

VAG 1598 Test box, connecting

Example: CIS-E III Fuel Injection system control unit

- select the appropriate adaptor harness from the list (based on the connector you wish to connect to) for this example use adaptor harness **VAG 1598/2**
- connect adaptor harness **VAG 1598/2** to main test box harness by joining the two rectangular connectors, then tighten via knobs on main harness connector

Note

The rectangular connector which is on every adaptor cable can only be connected one way. Examine the connector and you will see where the threaded connectors of the test box harness attach to the adaptor connector.

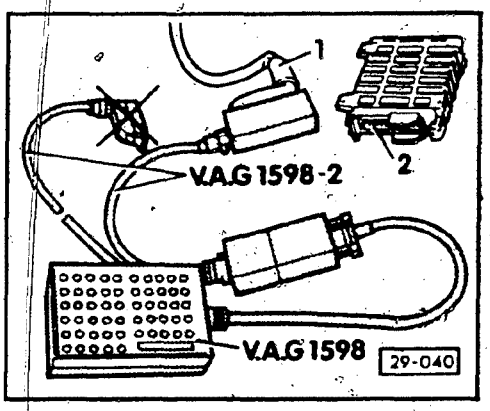

- disconnect Fuel Injection control unit harness connector **1** from control unit
- connect test adaptor **VAG 1598/2** male connector to control unit harness connector 1

Note

In this example the wiring up to the control unit is being checked statically, making it un-necessary to connect the control unit to the adaptor harness; however, for dynamic checks you will have to make this connection.

cardiagn.com

Fault memory, activating

CAUTION

Starting with model year 1989:

NEW diagnostic test connectors (for fault code activation and display) have been installed in the driver's side footwell.

It will no longer be possible to activate the fault memory by means of the fuel pump relay on these vehicles.

Existing repair procedures that refer to fault code activation via the fuel pump relay **remain the same** with the exception that the **NEW** diagnostic connectors outlined on this page **MUST** be used **INSTEAD** of the fuel pump relay.

The instrument panel fault lamp will remain functional **ONLY** in vehicles with OBD capability.

The fault lamp has been deleted from "**49 States**" vehicles.

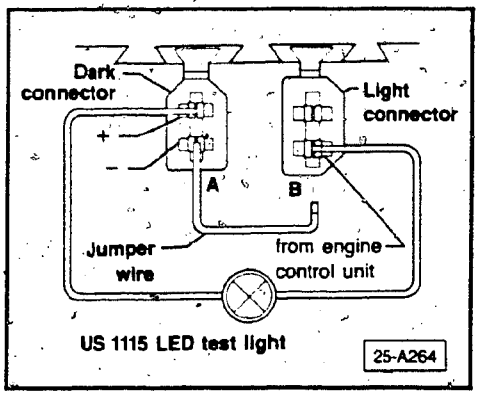

Dark colored connector **A**: contains **two** terminals; power (which is protected via fuse **21**) and ground (observe the shape: angled corners on the short side).

Light colored connector **B**: contains a **single** terminal from the engine control unit (observe the shape: angled corners on the long side).

Use the **NEW** connectors to display the contents of the fault memory (as well as System Output Checks, where installed) by using the **US 1115** LED tester as follows:

- connect positive terminal of **US 1115** LED tester to the positive terminal in connector **A**
- connect negative terminal of **US 1115** LED tester to the (only) terminal in connector **B**

cardiagn.com

- connect one end of a jumper wire to the negative terminal in connector **A**, touch the other end to the terminal in connector **B** for at least 4 seconds
  - fault codes will now be displayed (as flashing) by the **US 1115**

To advance to the next fault code in the sequence:

- touch the free end of the jumper wire to the terminal in connector **B** again for a minimum of four seconds

Note

This procedure achieves the same result as installing a fuse in the fuel pump relay for 4 seconds as in the 1988 fault code system.

cardiagn.com

VAG 1551 Diagnostic Tester, connecting

Model year 1988:

- remove central electric cover

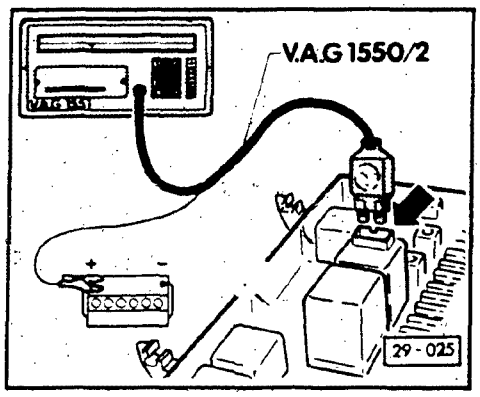

- connect **VAG 1551** to fuel pump relay (**arrow**) using adaptor **VAG 1551/2**, connect single wire on adaptor to battery positive (+)

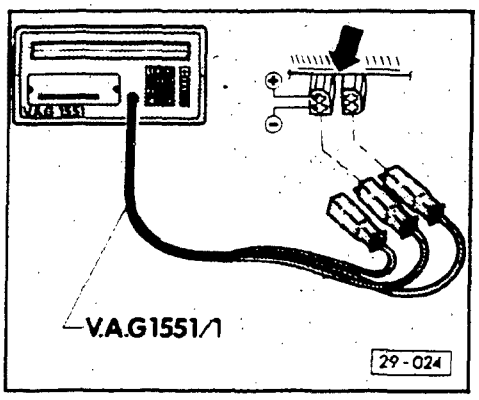

Beginning model year 1989

- connect **VAG 1551** diagnostic tester to diagnostic connectors (above pedal (s) in drivers side footwell) using **VAG 1551/1** connector harness as follows:
  - **BLACK** wire to **BLACK** diagnostic connector
  - **WHITE** wire to **BROWN** diagnostic connector
  - **BLUE** wire – **NOT** connected

Note

Voltage supply is via fuse **21**.

cardiagn.com

Fault memory, activating/interrogating using VAG 1551

Requirements
- fuses **13**, **21**, **27**, and **28** must be **OK**
- A/C switched **OFF**
- engine ground connection (near ignition distributor) **OK**

Notes

The fault memory must first be interrogated before it can be erased.

Using the **VAG 1551** tester eliminates the possibility of interpretive or written errors because the faults can be both displayed and printed by the tester.

If engine **CANNOT** be started:

- connect **VAG 1551** tester (see section D2-170)
- operate starter for about 6 seconds but do **NOT** switch ignition **OFF** afterwards
- activate fault memory (see next page)

If engine **CAN** be started:

- test drive vehicle for at least 5 minutes

During test drive

- coolant temperature must reach 80°C (176°F) minimum
- engine speed must exceed 3000 rpm
- accelerator pedal must be fully depressed at least once

- after test drive, allow engine to idle for at least 2 minutes
- switch **OFF** ignition
  - engine must **NOT** be re-started

> **CAUTION**
>
> A portion of the fault memory is erased when the engine is started. Adhere to the sequence in the following procedure so that **ALL** faults are recognized. Do **NOT** skip any of the steps.

cardiagn.com

Activating fault memory

- connect **VAG 1551** tester (see section D2-170)
- switch **ON** ignition but do **NOT** start engine
  - display should then alternate between the two following displays:

VAG – SELF-DIAGNOSIS **HELP**
1 – Rapid data transmission

VAG – SELF-DIAGNOSIS **HELP**
2 – Blink code output

- press **2** to select Blink code output
  - display will appear as follows:

  Blink code output **HELP**
  Initiate with the ➡ button

- depress ➡ button
  - display will appear as follows:

  *** Blink code output will be initiated!**

- press ➡ button and hold until following display appears

Blink code output, continuous short circuit on permanent ground exciter wire

Note

The asterisk in the upper left hand corner of the display will now start to flash. The asterisk flashes just as LED tester **US 1115** would if it were connected to the system instead.

The **VAG 1551** will count the number of flashes and convert them into a four digit fault code.

If **NO** faults are stored in the memory, the following display will appear:

Blink code 4444 ➡
No fault recognized

- switch **OFF** ignition but do **NOT** erase fault memory

cardiagn.com

If a fault in the system is found, the **VAG 1551** will display the appropriate fault code, a description of the fault and an alphanumeric code for the faulty component.

This alphanumeric code is the same code used on the wiring diagrams and in the troubleshooting tables. For example:

Blink code 2232
Air flow sensor – G70/G19

- press the ➡ button to advance to the next fault (if any)
  - display will appear as follows:

Blink code XXXX
Blink code signal is continued

If another fault is found it will be displayed as before.

If **NO** additional faults are found, the display will appear as follows:

Blink code 0000 ➡
Output end

If the vehicle being tested features more control units with fault memory, the blink code of the next control unit can be started by pressing the button.

If no other control units are to be tested, the following display will appear:

Blink code output ➡
is ended!

- switch **OFF** ignition
- press **C** button once
- repair the faults and then erase the fault memory, see section D2-190

- take vehicle for another road test (minimum of 5 minutes)
- check fault memory again to verify that **ALL** faults have been corrected

cardiagn.com

CONTINUED IN THE

BEGINNING OF NEXT ROW

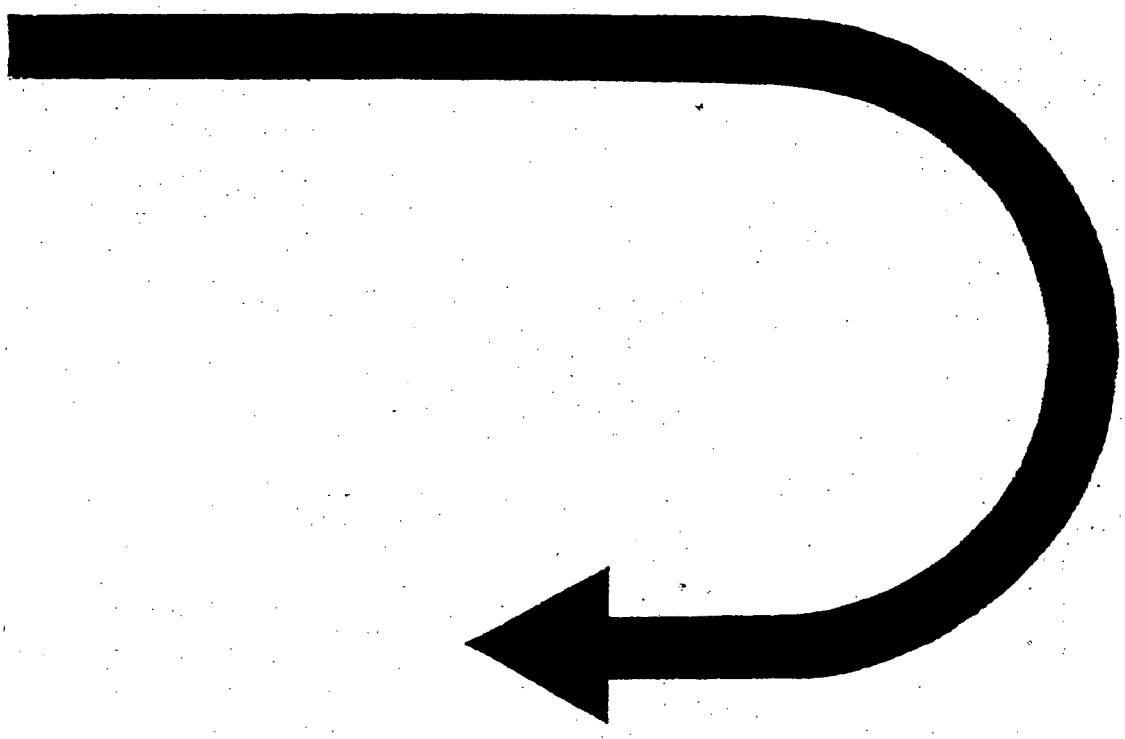

cardiagn.com

Fault memory, erasing (using VAG 1551 in mode 2, blink code output)

- connect **VAG 1551** tester (if not already connected, see section D2-170)
  - display should then alternate between the two following displays:

    VAG – SELF-DIAGNOSIS **HELP**
    1 – Rapid data transmission

    VAG – SELF-DIAGNOSIS **HELP**
    2 – Blink code output

- press **2** to select Blink code output
  - display will appear as follows:

    Blink code output **HELP**

Initiate with the ➡ button

- depress ➡ button
  - display will appear as follows:

    *** Blink code output will be initiated!**

- press ➡ button and hold until following display appears

Blink code output, continuous short circuit on permanent ground exciter wire

- switch **ON** ignition and push ➡ button briefly
  - following display will appear:

    Blink code 0000

    End output

- press ➡ button
  - ignition still switched **ON** for at least 5 seconds
  - **VAG 1551** connected

  Fault memory is erased.

cardiagn.com

Fault codes, troubleshooting chart

Code	Location of fault	Problem	Repair procedures
1111	Ignition control unit or fuel injection control unit	Defective memory circuits in control unit	Replace control unit(s)
2121	Idle switch	Switch stuck closed or problem in wiring to switch	Check idle switch and wiring
2122	Engine speed signal or Hall sender	No engine speed signal from Terminal **17** of ignition control unit to Terminal **30** of fuel injection control unit	Repair break in wiring using wiring diagram or check Hall sender and ignition control unit power according to the wiring diagram
2123	Full throttle switch	Switch stuck closed or problem in wiring to switch	Check full throttle switch and wiring see Repair Group 25
2132*	No data being transmitted from fuel injection control unit to ignition control unit	Disconnected or open wire between ignition control unit Terminal **5** and fuel injection control unit Terminal **1** or Ignition control unit Terminal **3** and fuel injection control unit Terminal **13** or Defective control units	Solution: check wiring Replace control unit(s)
2141	Knock regulation	Engine or ignition knock is causing timing to be retarded the maximum amount	Check ignition distributor basic adjustment, compression, and injection system, check fuel octane Check knock sensor wiring using wiring diagram
2142	Knock sensor	Defective sensor or sensor wiring	Check wiring between knock sensor and ignition control unit according to wiring diagram
2223	Altitude sensor	No signal from sensor	Check altitude sensor and wiring see Repair Group 25

cardiagn.com

Code	Location of fault	Problem	Repair procedures
2232	Air flow sensor potentiometer	No signal from potentiometer to fuel injection control unit or break in wire between fuel injection control unit Terminal **21** and ignition control unit Terminal **8**	Check potentiometer (on air flow sensor) and wiring see Repair Group 25 Repair break in wiring using wiring diagram
2233	Reference (supply) voltage for air flow sensor potentiometer and altitude sensor	No reference voltage from Terminal **21** of ignition control unit to Terminal **26** of fuel injection control unit	Check wiring between ignition control unit and fuel injection control unit using wiring diagram
2312	Coolant temperature sensor	No signal from sensor	Check coolant temperature sender and wiring see Repair Group 25
2341	Oxygen sensor control	Oxygen sensor control operating at rich or lean limit	Check oxygen sensor and wiring between fuel injection control unit see Repair Group 25
2342	Oxygen sensor	No signal from sensor	Check oxygen sensor wiring. See wiring diagram
4431	Idle stabilizer valve	Problem in wiring to idle stabilizer valve	Check wiring for idle stabilizer valve using wiring diagram or perform differential pressure regulator diagnosis see Repair Group 25
4444	No faults stored in memory	—	—
0000	End of diagnosis	—	—

*California only

Note

If the only fault codes displayed are **2121**, **2123** and **2223** first check the wiring from the control unit to the component.

cardiagn.com

Output checks

using VAG 1551 in Mode 2 (Blink code output)

Notes

Output checks can only be performed when the engine is NOT running.

Output checks will stop being transmitted if the engine is started or if a speed impulse is recognized.

During the output check diagnosis, the carbon canister solenoid valve, the Idle stabilizer valve and the Cold start valve are checked audibly or by touch. Avoid background noise while audibly checking these components.

The Fuel pressure regulator is checked by measuring the Differential pressure regulator current with the Full throttle switch activated.

To repeat the output checks, switch the ignition **OFF** and then switch it back **ON** but do **NOT** start the engine.

Output checks occur in the following triggering sequence:

4341	Fuel pressure regulator (**N 73**)
4343	Carbon canister solenoid valve (**N 80**)
4431	Idle stabilizer valve (**N 71**)
4443	Cold start valve (**N 17**)

Output checks requirements
- Full throttle switch **OK**
- Fuel pressure regulator prepared for checking, see below:

Fuel pressure regulator, preparing for output checks

- disconnect differential pressure regulator harness connector
- switch multimeter **US 1119** to 20 volt DC range

cardiagn.com

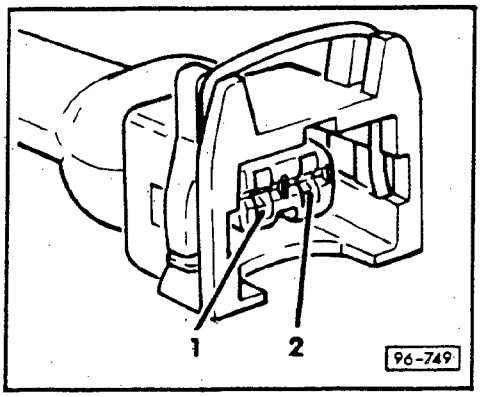

- connect multimeter to terminal **2** of harness connector and ground using **VW 1594** adaptor kit
- switch **ON** ignition
  - must be between 4.5 and 5 volts

- switch **OFF** ignition
- reconnect multimeter between terminals **1** and **2** of harness connector
- switch **ON** ignition
  - must be between 4.5 and 5 volts

If voltage values are **NOT** obtained

- check Differential pressure regulator triggering circuit, using wiring diagram, replace or repair as necessary

If voltage values **ARE** obtained

- switch **OFF** ignition

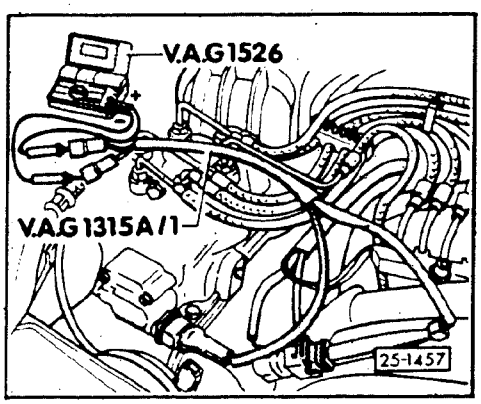

- connect test adaptor **VAG 1315A/1** between Differential pressure regulator harness connector and regulator
- switch multimeter **US 1119** to 200 mA DC range
- connect multimeter to **VAG 1315A/1** adaptor using **VW 1594** adaptor kit

Output check diagnosis, activation

- switch **OFF** ignition

Model year 1988:

- remove covering from fuse relay panel

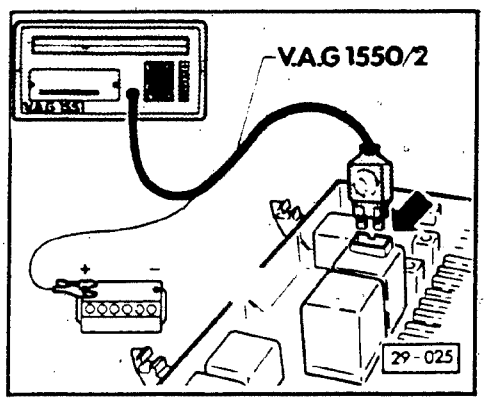

- connect **VAG 1551** diagnostic tester to fuel pump relay (**arrow**) and battery (+) positive terminal using **VAG 1551/2** adaptor harness

cardiagn.com

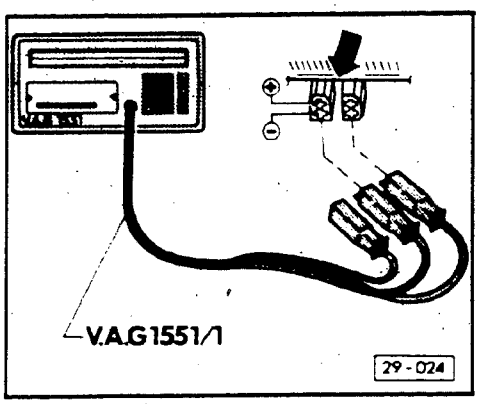

Starting model year 1989:

- connect **VAG 1551** Diagnostic tester to diagnostic connectors in drivers side footwell (above and to left of pedals):
  - black wire to black diagnostic connector
  - white wire to brown diagnostic connector
  - blue wire **NOT USED**
  - voltage supply via fuse **21**

All model years:

- switch **ON** ignition but do **NOT** start engine
  - display should then alternate between the two following displays:

VAG – SELF-DIAGNOSIS HELP
1 – Rapid data transmission

VAG – SELF-DIAGNOSIS HELP
2 – Blink code output

- press **2** to select Blink code output
  - display will appear as follows:

Blink code output HELP

Initiate with the ➡ button

- depress ➡ button
  - display will appear as follows:

* **Blink code output will be initiated!**

- press ➡ button and hold until following display appears

Blink code output, Continuous short circuit on permanent ground exciter wire

- push ➡ button briefly
  - display will appear as follows:

Blink code 4341

Pressure regulator N 73

- actuate full throttle switch and hold in position
  - current must be approx. 10 mA

Note

The current value will be displayed for as long as the full throttle switch is activated

cardiagn.com

If current value is **NOT** obtained

- check wiring between component and control unit using wiring diagram, replace or repair as necessary

If current value is obtained

- push ➡ button briefly
  - display will appear as follows:

    Blink code 4343 Solenoid valve I for carbon canister N 80

- actuate full throttle switch and hold in position
  - solenoid I for carbon canister is triggered (should vibrate and hum)

If solenoid valve is **NOT** triggered

- check wiring between component and control unit using wiring diagram, replace or repair as necessary
- push ➡ button briefly
  - display will appear as follows:

    Blink code 4431
    Idle stabilizer valve N 71

- actuate full throttle switch and hold in position
  - idle stabilizer valve is triggered (should vibrate and hum)

If idle stabilizer valve is **NOT** triggered:

- check wiring between component and control unit using wiring diagram, replace or repair as necessary
- push ➡ button briefly
  - display will appear as follows:

    Blink code 4443
    Cold start valve N 17

- actuate full throttle switch and hold in position
  - cold start valve is triggered (should vibrate and hum)

If cold start valve is **NOT** triggered:

- check wiring between component and control unit using wiring diagram, replace or repair as necessary

California ONLY:

- push ➡ button briefly
  - fault memory is erased
- switch **OFF** ignition

cardiagn.com

Fault code, troubleshooting chart

- The following charts list all of the possible faults that can be detected by the CIS-E III fuel and ignition control units. These faults are displayed directly on the **VAG 1551** diagnostic tester.
- If components are indicated as faulty, first check the wiring to the component for shorts or disconnections using the wiring diagram.
- Before correcting a fault or replacing components, check the Fuel and Ignition control units for proper ground connections.
- Check engine ground connections for corrosion or damage. Replace or repair as necessary.
- If Fault codes **2121**, **2123** or **2223** are indicated ALONG with the fault code for a control unit; first check the wiring between that control unit and the fault coded component for a disconnection.
- Engine warning light will flash while driving when knock control is at control limit (model year 1988)
- If idle speed increases in excess of 1200 rpm (engine warm) but lies within the specified range after restarting engine (see fault codes **2122** and **2232**) possible causes include loose terminals in the air flow sensor potentiometer harness connector or between terminal **17** of the Ignition control unit (**J 154**) and terminal **30** of the Fuel injection control unit (**J 21**).

CAUTION

If the ignition control unit (**J 154**) is replaced, **ALWAYS** check the ignition timing (see Repair Group 28), adjust timing if necessary.

cardiagn.com

Fault code listing

Fault Code (display on VAG 1551)	Description	Fault location	
		Ignition Control Unit	Fuel Injection Control Unit
1111	Control unit faulty	X	X
1231	Speed sensor (**G 68**)*		X
2121	Idle switch (**F 60**)	X	X
2122	Speed information missing		X
2123	Full throttle switch (**F 81**)	X	X
2141	First knock regulation	X	
2142	Knock sensor I (**G 61**)	X	
2223	Altitude sensor (**F 96**)	X	X
2232	Air Flow Sensor (**G 70/G 19**)	X	X
2233	Air Flow Sensor Ref. Voltage (**G 70**)	X	
2312	Coolant Temperature Sensor (**G 62**)	X	X
2341	Oxygen Sensor Control		X
2342	Oxygen Sensor (**G 39**)		X
4431	Idle Stabilizer Valve (**N 71**)		X
4444	No Fault recognized	X	X

Additional Fault codes for California Vehicles ONLY

2132	Data Wiring Defective		X
2411	Exhaust Gas Recirculation System		X

*The **VAG 1551** displays component **G 68**, this is a software error. It **should** have displayed **G 22**.

cardiagn.com

Fault Code and display on VAG 1551	Problem	Repair
1111 Control unit faulty	Fault in processor section of Fuel injection control unit (**J 21**) Fault in processor section of Ignition control unit (**J 154**)	Replace Fuel injection control unit Replace Ignition control unit
1231 Trans. speed sender (**G 68**)	Disconnected wire between instrument cluster and Fuel injection control unit Disconnected wire or short to (**G 68**)	check wiring between terminal **29** of Fuel injection control unit and instrument cluster, using wiring diagram
Troubleshooting hint: If fault **1231** is indicated, first check if speedometer is **OK**. If speedometer is defective; repair or replace and ignore fault code. If the speedometer is **OK** but the engine stalls during deceleration; first check the Trans. speed sender (**G 68**) and related wiring, then check the Fuel injection control unit (**J 21**) and related wiring. Repair or replace as necessary.		
2121 Idle Switch (**F 60**)	Accelerator cable out of adjustment Idle switch (**F 60**) out of adjustment Idle switch (**F 60**) wiring shorted or disconnected Idle switch (**F 60**) hung up mechanically	Adjust accelerator cable, see Repair Group 20 Adjust Idle switch Repair as necessary Repair as necessary
2122 Engine speed signal missing	Disconnection between terminal **17** of Ignition control unit (**J 154**) and terminal **30** of Fuel injection control unit (**J 21**). No rpm signal from Ignition control unit (**J 154**) to fuel injection control unit via knock control Hall sender (**G 40**) faulty Ignition control unit (**J 154**) or related wiring, defective	Determine disconnection using wiring diagram Check Hall sender, replace if necessary Check control unit, repair wiring or replace control unit as necessary

cardiagn.com

Fault Code and display on VAG 1551	Problem	Repair
2123 Full throttle switch (**F 81**)	Full throttle switch out of adjustment	Adjust switch, see Repair Group 25
	Short or open in switch	Electrically check switch, replace or repair as necessary
	Switch hangs up mechanically	Check operation, repair or replace as necessary
2132 Data wiring defective (**Code for California ONLY**)	Disconnection between terminal **5** of Ignition control unit (**J 154**) and terminal **1** of Fuel injection control unit (**J 21**)	Determine disconnection using wiring diagram
	or	
	Disconnection between terminal **3** of Ignition control unit (**J 154**) and terminal **13** of Fuel injection control unit (**J 21**). Control unit defective	Determine disconnection using wiring diagram
2141 First knock regulation	Engine knocks or makes rattling sound	Check compression pressure, see Repair Group 15
		Check Fuel injection system, see Repair Group 25
		Check distributor ground
	Ignition timing point set wrong	Check ignition timing and adjust if necessary, see Repair Group 28
	Octane value of fuel too low • 87 AKI minimum	Replace fuel with higher octane; 91 AKI recommended
	Knock sensor shield, disconnected	Determine disconnection using wiring diagram
Troubleshooting hint: This fault code is accompanied by a slight power loss, a slight increase in fuel consumption and maximum power cannot be obtained.		

cardiagn.com

Fault Code and display on VAG 1551	Problem	Repair
2142 Knock sensor I (**G 61**)	Disconnected wire or short between Knock sensor I (**G 61**) and Ignition control unit (**J 154**)	Determine disconnected wire or short and eliminate using wiring diagram
	Knock sensor I (**G 61**) defective	Replace Knock sensor • 20 Nm (15 ft lb)
	Ignition control unit (**J 154**) fails to recognize knock signals	Replace Ignition control unit
2223 Altitude sensor (**F 96**)	Disconnected wire or short between Altitude sensor (**F 96**) and fuel injection control unit (**J 21**)	Check altitude sensor
	Altitude sensor defective	Replace altitude sensor
2232 Air Flow sensor (**G 70/G 19**)	Disconnected wire or short between Fuel injection control unit (**J 21**) and Potentiometer (**G 19**)	Check Potentiometer
	Disconnected wire between terminal **21** of Fuel injection control unit (**J 21**) and terminal **8** of Ignition control unit (**J 154**)	Determine disconnected wire or short and eliminate using wiring diagram
2233 Air flow sensor reference voltage (**G 70**)	Disconnection between terminal **26** of Fuel injection control unit (**J 21**) and terminal **21** of Ignition control unit (**J 154**)	Eliminate disconnection using wiring diagram
Note The reference voltage for load and altitude signals is monitored by the CIS-E III Fuel injection control unit and **NOT** as indicated on the **VAG 1551** diagnostic tester! The reference voltage is from the Air flow sensor potentiometer. NG engines do **NOT** have an Air mass sensor, using a Potentiometer instead.		
2312 Coolant temperature sensor (**G 62**)	Disconnection or short in sensor wire	Check Coolant temperature sensor
	Coolant temperature sensor (**G 62**) defective	Replace sensor

cardiagn.com

Fault Code and display on VAG 1551	Problem	Repair
2341 Oxygen sensor control	CO content not within specified range	Check idle and CO content see Repair Group 25, adjust as necessary
	Faulty ground connection to Oxygen sensor	Check wiring, using wiring diagram
	Charcoal canister solenoid valve I always open	Perform Output checks, see section D2-210
	Intake air boot and/or hoses have air leaks	Check system and hoses for air leaks
2342 Oxygen sensor (**G 39**)	Oxygen sensor (**G 39**) disconnected or defective	Check Oxygen sensor control, see Repair Group 25
2411 Exhaust Gas Recirculation system (California **ONLY**)	Vacuum lines disconnected, leaking or pinched	Check EGR system, see Repair Group 26
	EGR temp. sensor (**G 98**) faulty	—
	Driving fault, e.g. vibration, poor idle	—
	EGR valve faulty	—
	EGR system Frequency valve (**N 121**) faulty (poor starting)	—
	Disconnected wire between Speed sensor (**G 98**) or Frequency valve (**N 121**) and control unit	Check wiring using wiring diagram, replace or repair as necessary
4431 Idle Stabilizer valve (**N 71**)	Disconnected wire or short between Fuel injection control unit (**J 21**) and Idle stabilizer valve (**N 71**)	Check Idle stabilizer valve triggering using Output checks, see section D2-210
4444 No Fault recognized	If a fault exists, it was **NOT** recognized by self-diagnosis	—
0000 Output End	—	—

cardiagn.com

Index

20-valve (up to 03/90 prod.)

Diagnostic connectors (for VAG 1551)
- wiring check D2-300

Fault code
- troubleshooting table D2-270

Fault memory
- display D2-250
- erasing D2-260
- general description D2-230

Output checks
- call-up sequence D2-290
- diagnosis D2-280
- fault memory code erasing D2-290

VAG 1551 Diagnostic Tester
- connecting D2-240

cardiagn.com

Fault Memory, general description

For multipoint injection (MPI)

The MPI control unit (**J 192**) is equipped with a self-diagnostic system. If faults occur in monitored sensors or components, they are stored in the fault memory.

The MPI control unit differentiates faults after evaluating the information it receives and stores these in fault memory until the code is erased.

The control unit also has a self-diagnostic mode for its output circuits (see section D2-250).

The self-diagnostic system of the control unit monitors signals of the electrically-controlled engine components. If faults occur in these circuits, they are stored in the permanent long-term memory and can be called up and read via a blink code.

For 49 states vehicles, calling up and erasing codes from the fault memory and output check can be performed with LED tester **US-1115** and adaptor leads from the **VW 1594 KIT**.

On California vehicles, calling up, reading, erasing codes from fault memory and output check can be performed with the instrument cluster engine warning lamp.

As a self check, the engine warning lamp should light up every time the ignition is switched **ON**.

If the engine warning lamp does not light when ignition is switched **ON**, jumper terminals on diagnostic connectors as described, (see section D2-250).

If engine warning lamp does not light with jumpered terminals and ignition switch **ON**, check wiring according to wiring diagram.

Stored codes can be read after initiation of fault display, see "Calling up faults from fault memory" (see section D2-250).

Erasing fault memory (see section D2-260).

Output checks can only be performed when engine is not running.

Fault memory can be erased only after output checks have been performed.

C-2

cardiagn.com

VAG 1551 diagnostic tester, connecting

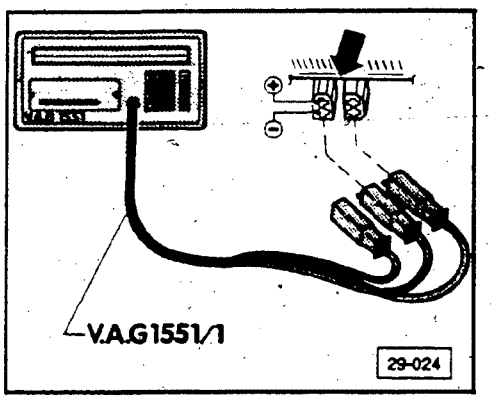

- connect **VAG 1551** diagnostic tester to diagnostic connectors (above pedal(s) in drivers side footwell) using **VAG 1551/1** connector harness as follows:
  - **BLACK** wire to **BLACK** diagnostic connector
  - **WHITE** wire to **BROWN** diagnostic connector
  - **BLUE** wire – **NOT** connected

cardiagn.com

Fault memory, display

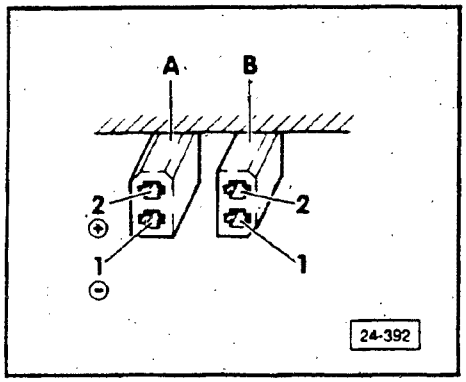

Calling up fault memory and output checks are initiated by connecting both terminal 1s together on the diagnostic connectors.

- Diagnostic connectors **A** and **B** are located under storage area of driver's footwell

Note

Calling up fault memory and performing output checks differ in that, the diagnostic terminal is grounded **before** ignition **ON**, for output checks, and after ignition **ON**, when recalling fault memory.

If output check or fault memory cannot be initiated check wiring from diagnostic connectors to MPI control unit, and to fuse **21** according to the wiring diagram.

If there are no faults in wiring, replace MPI control unit.

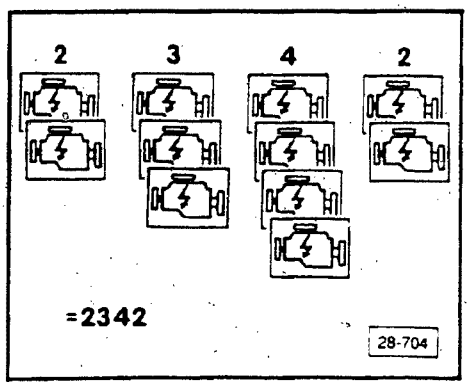

Blink code display with test lamp US 1115 or California engine warning light

When calling up codes from fault memory, blink code can be repeated.

During output diagnosis, respective component is identified by a blink code.

- Each code consists of **4** blink pulse groups with a maximum of **4** blink pulses each. There is a pause (light off) of about 2.5 seconds between blink pulse groups.

Add individual blinks (between 1 and 4) of each pulse group to determine 4 digit code being transmitted.

To diagnose faults, all blink codes are in fault table (see section D2-270).

See group 01 for blink codes related to output diagnosis.

Blink code display is as follows: After a start signal (light on) followed by a pause (light off) of 2.5 seconds each, a code sequence of 4 digits begins.

cardiagn.com

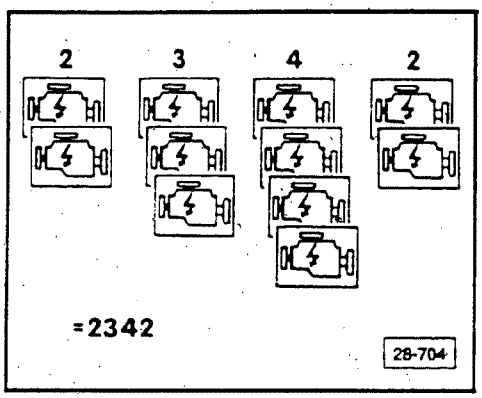

The first blink of actual code will last 0.5 seconds, a pause of 0.5 seconds, (light off) will follow if there are more blinks to add to the group. If the first digit of the code is a 2, the lamp will blink again for 0.5 seconds, (light on). This will complete the first group. A pause of 2.5 seconds will follow before transmission of the 2nd digit (pulse group) of code begins.

As the 2nd group is to represent a 3 (see 28-704) the light will blink 3 times for 0.5, each followed by 0.5 seconds light off. The 3rd blink would be followed by a pause of 2.5 seconds to indicate end of transmission for pulse group 2. Pulse group 3 and 4 will transmit their digit in a like manner.

After transmission of four blink pulse groups, there is a pause of about 2.5 seconds. The code will then repeat itself until the next storage location or component is called up during output diagnosis.

Fault memory code output, end

The fault code **0000** (output end) is displayed by repeated blink pulses in 2.5 second intervals. Blink pulses are repeated until the ignition is switched **OFF** or engine speed is increased to over 2000 rpm.

Fault memory code callup

Requirements

- fuel-pump relay **OK**
- fuses 13, 21, 27 and 28 **OK**
- note safety measures, and guidelines for working with fully electronic ignitions (see section D2-10).
- for California vehicles, engine warning lamp **OK**

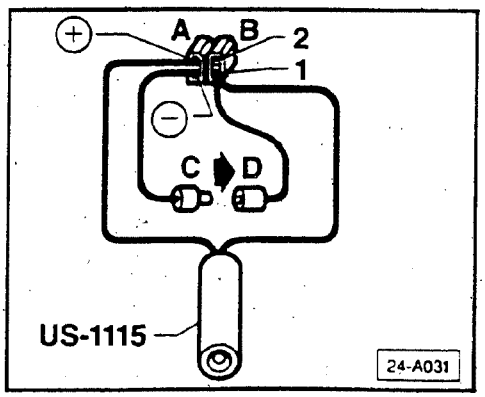

Note

Terminal **2** voltage supply, positive (+) of black diagnostic connector **A** is protected by fuse **21**. Terminal **1** of connector **A** is connected to ground (−), diagnostic connector **B** (brown) utilizes terminal **1** only (see wiring diagram).

Connection of test leads for fault memory code call-up

- connect as per figure 24-A031. **DO NOT** connect jumper ends **C** and **D** at this time

cardiagn.com

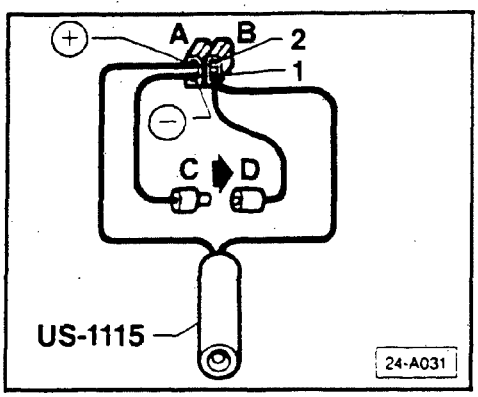

Note

For California vehicles, **VW 1594/19** adaptor wire may be used to start code callup by jumping terminal **A1** to **B1** for 4 seconds **after** ignition switched **ON**

- switch ignition **ON**
- connect jumper end **C** (ground) to jumper end **D** after 4 seconds, disconnect
- observe light and note blink sequence
- if no faults are stored, light will blink code **4444** (will not display on engine warning lamp)
- if transmitted code is other than **4444** refer to fault tables (see section D2-270)
- continue 4 second jumper and code output sequence until **0000** (all codes transmitted from fault memory) is displayed
  - Digit **0** is represented by four blinks, 2.5 seconds (light on) each followed by a pause (light off) of 2.5 seconds.
  - **0000** does not display on engine warning lamp
- switch ignition **OFF**.

Note

If more than 1 code has been transmitted, perform diagnosis and repairs in the same sequence as the codes were displayed.

Note

If no faults were displayed, and engine does not run, check ignition timing reference sensor, engine-speed sensor, and Hall sender.

cardiagn.com

Fault memory, erasing

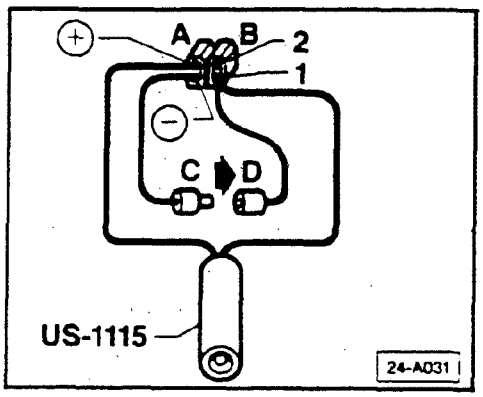

- after call-up of fault memory, switch ignition **OFF** and perform output checks

> **CAUTION**
>
> Codes in fault memory can only be erased after output check has been performed.

Note

When jumper ends **C** and **D** are reconnected for at least 4 seconds at end of output check following a display of code **0000**, switch ignition **OFF** and fault memory codes will be erased.

cardiagn.com

Fault code, troubleshooting table

CAUTION

To avoid damage to tester and control unit terminals, use adaptor kit **VW 1594** for all troubleshooting connections.

Note

Before replacing components, check wiring according to wiring diagram.

Flash Code	Fault Source	Possible Cause/ Symptom	Fault Correction
1111	Control unit	Microprocessor in MPI control unit is faulty	Replace MPI control unit
****1231**	Transmission speed sensor — (**G 68**)	Open or short circuit in sensor wiring, transmission speed sensor faulty, instrument cluster circuit faulty	Check speed signal (see group 24)
2111	Engine-speed sensor (**G 28***) (gray)	Open or short circuit in sensor wiring, engine-speed sensor faulty	Check engine-speed sensor (see group 24)
2112	Ignition reference sensor (**G 4***) (black)	Open or short circuit in sensor wiring, ignition — reference sensor faulty Engine-speed sensor exchanged with ignition-point sensor	Check ignition — reference sensor (see group 28) Connect sensors according to wiring diagram corresponding and color coding
2113	Hall sensor (**G 40***)	Open or short-circuit in sensor wiring, Hall sensor faulty	Check Hall sensor (see group 28)
2114	Ignition distributor basic	Distributor out of adjustment	Ignition distributor — adjustment (see group 28)
2121	Idle switch (**F 60***)	Open or short-circuit, idle switch	Check idle switch (see group 24)

*Component code in wiring diagram.
**Does not display on California engine warning light

cardiagn.com

Flash Code	Fault Source	Possible Cause/ Symptom	Fault Correction
2141 or **2143**	Knock control 1 Knock sensor 1 (**G 61***, red) for cylinder 2	(Engine pings, knocks)	Check cylinder compression, fuel-injection system
	Knock control 2 Knock sensor 2 (**G 66***, white) on cylinder 4	Fuel octane number too low (minimum 87 AKI)	Use specified fuel (recommended 91 AKI)
2142 or **2144**	Knock sensor 1 (**G 61***, red) on cylinder 2	Open or short-circuit in sensor wiring	Check wire routing of respective knock sensor according to wiring diagram
	Knock sensor 2 (**G 66***, white) on cylinder 4	Knock sensor faulty	Replace knock sensor
2212	Throttle-valve potentiometer (**G 69***)	Throttle-valve potentiometer output voltage too low or high in relation to air mass	Check throttle-valve potentiometer group and wire routing (see Group 24)
2242	CO potentiometer (**G 74***)	Output voltage of CO potentiometer too high	Check air mass sensor (see Group 24)
2232	Air mass sensor (**G 70***)	Output voltage of air mass sensor too low or too high in relation to rpm	Check air mass sensor and wiring (see Group 24)
2233	Air mass sensor (**G 19***)	Reference voltage on air mass sensor greater than 1 Volt	Check air mass sensor wiring (see Group 24)
2234	MPI control unit supply voltage	Vehicle system voltage too low, open circuit to terminal **18** of MPI connector **A** or fuel-pump relay	Check supply voltage to control unit (see Group 24) Check fuel-pump relay (see Group 24)
2312	Coolant-temperature sensor (**G 62***)	Open or short-circuit in sensor wiring, coolant-temperature sensor faulty	Check coolant temperature sensor (see Group 24)
2342	OXS sensor	OXS sensor has open or short-circuit	Check OXS sensor (see Group 24)

*Component code in wiring diagram.

cardiagn.com

Flash Code	Fault Source	Possible Cause/ Symptom	Fault Correction
4431	Idle-stabilizer valve (N 71*)	Open or short-circuit to idle-stabilization valve	Check idle-stabilizer valve (see Group 24)
**4444	No faults stored in memory	—	—
**0000	Fault transmission completed	—	—

*Component code in wiring diagram.
**Does not display on California engine warning light

cardiagn.com

Output checks, diagnosis

General information

The MPI control unit is equipped with an output circuit check mode. In this mode the control unit will activate the 8 following components in sequence. When activated, the components may be checked audibly or by touch.

- a blink code has been assigned to each component, which can be displayed with test light **US 1115** at vehicle diagnostic connectors or on engine warning lamp. (California vehicles only)

		Blink code
1 — Fuel pump relay	(J 17*)	4433
2 — Fuel injector (cylinder 1)	(N 30*)	4411
3 — Fuel injector (cylinder 2)	(N 31*)	4412
4 — Fuel injector (cylinder 3)	(N 32*)	4413
5 — Fuel injector (cylinder 4)	(N 33*)	4414
6 — Fuel injector (cylinder 5)	(N 83*)	4421
7 — Idle stabilizer valve	(N 71*)	4431
8 — Carbon canister solenoid valve	(N 80*)	4343

*Component code used in wiring diagrams.

Note

Be familiar with the following points before performing output checks.

- a low level noise area is preferred when conducting output checks
- fuel pump relay check requires that fuel pump is running, (do not confuse sound of fuel pressure regulator with that of fuel pump)
- fuel injectors are pulsed 5 times each, for 1 millisecond per pulse
- idle stabilizer valve and carbon canister solenoid valve are pulsed on and off continually until next output is activated or mode is finished
- do not crank engine during output check. If this occurs, complete sequence must be repeated from start
- to repeat output check mode sequence, ignition must be switched to **OFF** and restarted briefly, (if engine is not run, fuel injectors will not pulse during next output check)
- if any component does not operate according to check sequence, repeat call-up fault memory and repair circuit as required

cardiagn.com

Output check callup sequence and fault memory code erasing

Requirements

- fuel-pump relay **OK**
- fuses 13, 21, 27 and 28 **OK**
- note safety measures, and guidelines for working with fully electronic ignitions (see section D2-10).
- for California vehicles, engine warning lamp **OK**

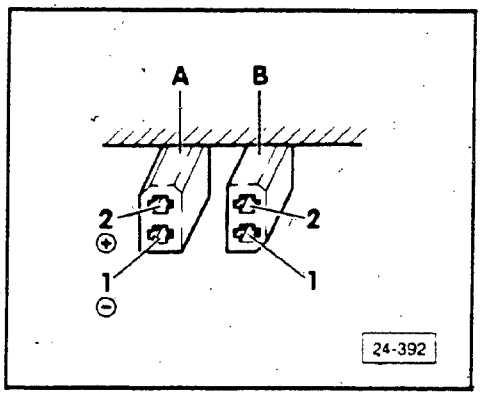

Note

Terminal **2** voltage supply, positive (+) of black diagnostic connector **A** is protected by fuse 21. Terminal **1** of connector **A** is connected to ground (−) diagnostic connector **B** (brown) utilizes terminal **1** only (see wiring diagram). Both connectors are located above driver foot well.

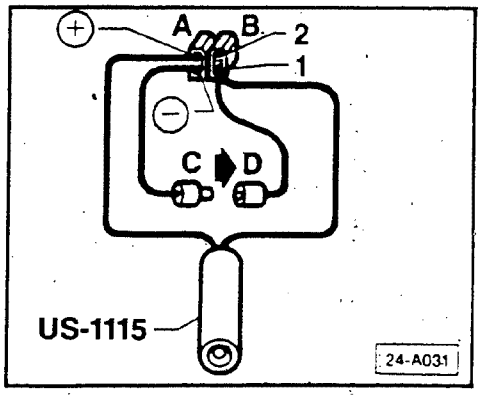

Connecting test leads for fault memory code call-up

- connect as shown, **DO** connect jumper ends **C** and **D** at this time

Note

For California vehicles, **VW 1594/19** may be used to start code call-up by jumping terminal **A1** to **B1** before ignition is switched **ON**

Output check, callup

- switch ignition **ON**
- disconnect jumper ends **C** and **D** after a minimum of 4 seconds
  - blink code **4433**, (fuel pump relay, **J 17**) should appear and fuel pump should run audibly

- if blink code does not appear, check
  - control unit supply voltage (see group 24)
  - wiring and test connections of diagnostic terminals
  - repair as required
  - perform fault memory call-up

cardiagn.com

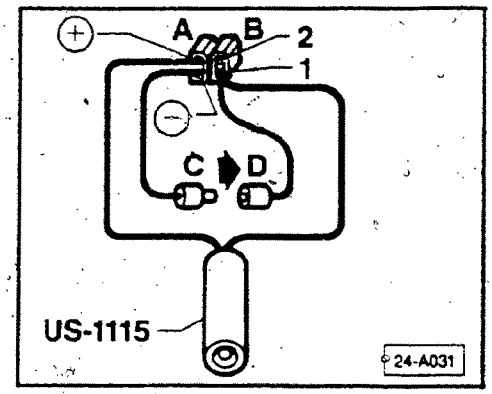

- repeat output check
- if fuel pump does not run, check fuel pump relay (see group 24)
- if fuel pump runs, connect jumper end **D** to jumper end **C** for at least 4 seconds, disconnect
- blink code **4411** cylinder 1 fuel injector (**N 30**) should appear

- briefly open throttle to wide open and listen for injector cylinder 1 pulse
  - this may be repeated 4 more times at cylinder **1**

- if injector does not pulse, see group 24
- if injector does pulse, repeat output injector check for remaining cylinders
  - **4412**, cylinder 2 injector (**N 31**)
  - **4413**, cylinder 3 injector (**N 32**)
  - **4414**, cylinder 4 injector (**N 33**)
  - **4421**, cylinder 5 injector (**N 83**)

- connect jumper ends **D** and **C** for at least 4 seconds, disconnect
- blink code **4431**, idle stabilizer valve (**N 71**) should appear and valve should cycle on and off until next output check is initiated
- if valve **N 71** does not operate, see Group 24
- if stabilizer valve is **OK** connect jumper ends **C** and **D** for at least 4 seconds
- blink code **4343**, carbon canister solenoid valve (**N 80**) should appear and valve should activate on and off until jumper ends **C** and **D** are connected again
  - if valve does not operate see Group 24

- if valve **N 80** operates, reconnect jumper ends **C** and **D** for at least 4 seconds; disconnect
  - blink code **0000**, output end should appear

- reconnect jumper ends **C** and **D** for at least 4 seconds, disconnect
- switch ignition to **OFF**
  - fault memory is erased and output checks completed

cardiagn.com

Diagnostic connectors wiring check

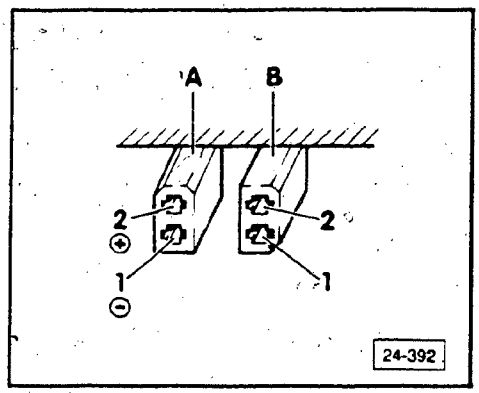

Diagnostic connectors **A** and **B** are located under the storage shelf in the driver's side foot well.

Diagnostic connector A (supply voltage):

terminal **1** to ground (−)

terminal **2** supply voltage (+) (via fuse **21**)

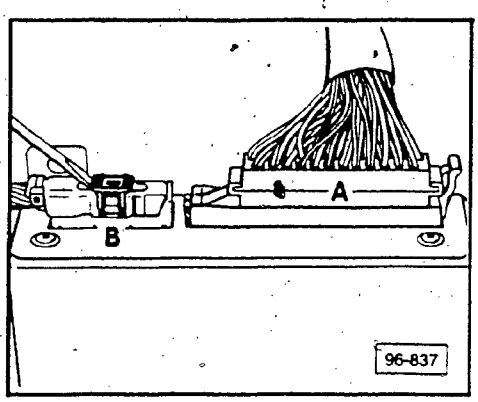

Diagnostic connector B (signal lead):

Note

Terminal **1** to MPI control unit (**J 192**), connector **A**, terminal **22**, terminal **2** not used at time of this publication.

- remove passenger foot well cover under glove compartment
- disconnect harness **A** (25 pin) from MPI control unit

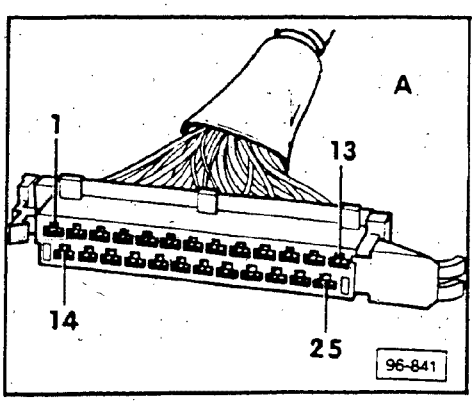

- verify continuity between control unit connector **A**, terminal **22** and terminal **1** of diagnostic connector **B** with multimeter **US 1119**
  - must be: approximately 0 ohm (continuity)

If continuity is **not** obtained:

- check wiring according to wiring diagram

cardiagn.com

Index

20-valve (from 03/90 prod.)

Diagnostic connectors (VAG 1551)
- checking D2-430

Engine basic adjustment
- using VAG 1551 D2-380

Fault memory
- activating/canceling D2-330

Fault troubleshooting
- chart D2-450

MPI control unit
- coding variants D2-440
- removing/installing D2-410

MPI system, self-diagnosis
- general information D2-310
- technical data D2-320

Output checks
- activating D2-340

VAG 1551 Diagnostic Tester (Function 04)
- display values D2-360
- specifications/troubleshooting D2-370

VAG 1551 Diagnostic Tester (Function 08)
- test value block, reading D2-350
- control unit version, displaying D2-400

VAG 1551 Diagnostic Tester (Function 09)
- vehicle speed checking D2-390

VAG 1598 Text Box
- terminal numbering D2-420

cardiagn.com

MPI Self Diagnosis, general information

Note

Beginning March 1990, a revised MPI control unit has been installed in vehicles equipped with the 20 valve 7A engine.

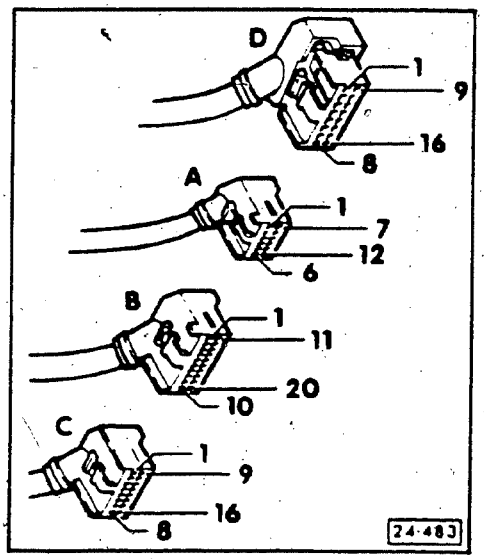

The revised control unit can be identified by its FOUR harness connectors in contrast to ...

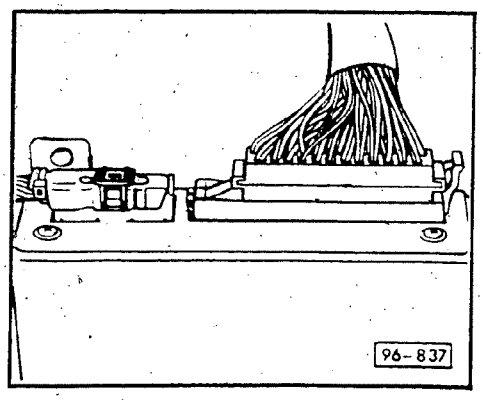

...the earlier MPI control unit which only had TWO harness connectors

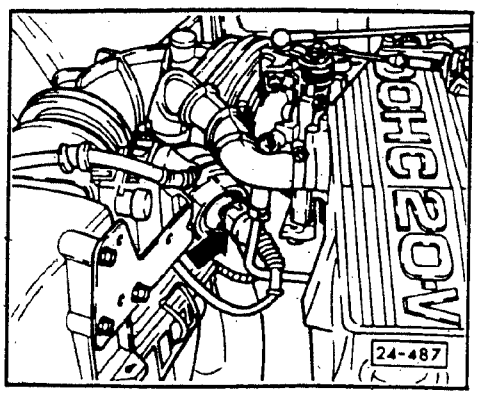

Vehicles with the revised MPI control unit can also be identified by a new idle stabilizer valve (**arrow**).

The exhaust manifold has also been revised. The new manifold is made of cast iron and features a "three into one" pipe design.

cardiagn.com

Self diagnosis, Technical Data

Control unit capabilities:	
Memory type	Permanent and sporadic Fault recognition
Data output mode	Rapid data transmission, and Blink code
Engine warning light (On Board Diagnosis)	Yes
Output checks	Yes (9 + 1 California only)
Engine Basic Adjustment	Yes
Read test value block	Yes
Read individual test values	Yes

The MPI control unit can differentiate between 30 different faults. If these faults occur, they are stored in a permanent fault memory until intentionally erased.

The MPI control unit can perform 9 different Output checks.

- Output checks can only be performed with the engine NOT running
- Fault memory should be activated with the engine running if possible

This system also recognizes sporadic (intermittent) faults.

Notes for fault recognition:

- If a fault is present for sufficient time it is stored as a static fault. If a condition appears momentarily or of insufficient time to be classified as static it will be stored in a portion of the control unit where it will receive different attention than a static fault. If within the next 50 engine starts the fault no longer appears, the fault will automatically be erased
- California version: faults which affect exhaust or emission requirements will be displayed by the engine warning light (OBD) on the instrument panel
- Fault codes displayed by the engine warning light can be found on the chart in section D2-450
- Before activating fault memory, perform output checks diagnosis and read test value block

cardiagn.com

Engine ground connections, checking

Requirements:

- Fuses 13, 21, 27 and 28 OK
- Fuel pump relay OK

- check both ground fastening points on rear of intake manifold
- check battery ground strap
- check ground strap between left engine support and long members

cardiagn.com

Fault memory, activating/canceling

Using **VAG 1551** Diagnostic Tester in mode **1** (Rapid data transmission).

Note

Fault memory cannot be erased until it is first read (activated).

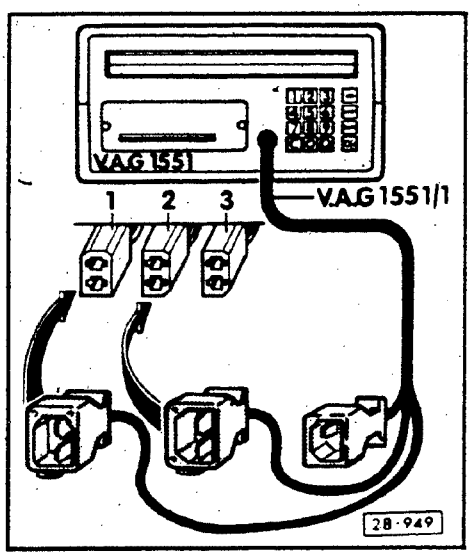

- switch **OFF** ignition
- connect **VAG 1551** Diagnostic tester to diagnostic connectors in (above pedals in drivers side footwell) using **VAG 1551/1** connector harness as follows:
  - **BLACK** wire to **BLACK** diagnostic connector **1**
  - **WHITE** wire to **BROWN** diagnostic connector **2**
  - **BLUE** wire **NOT** used

Following display will then appear:

VAG - SELF-DIAGNOSIS HELP

1 – Rapid data transmission*

2 – Flash code output*

*** Appears alternately**

- turn on **VAG 1551** printer by pressing "print" button
  - indicator lamp in button lights up
- start engine and let idle

If engine will NOT start:

- crank engine for 5 seconds, then leave ignition switched in the **ON** position
- press button "1" to select "rapid data transmission" operating mode
  - following display will appear

Rapid data transmission HELP
Input address word XX

- press buttons **0** and **1** to select function **01**: "engine electronics"
  - following display will appear

Rapid data transmission Q
01 - engine electronics

- enter input by pressing **Q** button
  - following display control unit identification (example) will appear

cardiagn.com

893907404 F ENGINE
coding 00

- press ➡ button
  - following display will appear

Control unit does NOT respond! HELP

- press **HELP** button
  - list of possible fault causes will print
- after eliminating possible fault causes, re-enter address word **01** for "Engine electronics"
- enter by pressing **Q** button

If Control unit does NOT respond! "**HELP**" appears again

- check if control unit harness connectors are connected **OK**, properly connect if necessary
- press ➡ button

Following display appears:

Rapid data transmission HELP
Select function XX

- press **0** and **2** buttons to select function **02** "fault memory recall"
  - following display will appear

Rapid data transmission Q
02 - fault memory recall

- enter by pressing **Q** button
  - one of the following displays will appear

No faults registered!

or

X Fault(s) registered!

- press ➡ button
  - stored faults are displayed and printed consecutively

cardiagn.com

Canceling Fault memory

After display and print out of the last fault:

- press ➡ button
  - following display will appear

Rapid Data Transmission HELP
Select Function XX

- press **0** and **5** buttons
  - following display will appear

Rapid Data Transmission Q
05 - cancel Fault memory

- enter by pressing **Q** button
  - following display will appear

CAUTION! Faults were not recalled from Fault memory.

- follow work procedure sequentially, i.e first recall faults from Fault memory

> **CAUTION**
>
> If the ignition is switched off or the engine is run between Fault memory recall and Fault memory cancellation stages, **FAULT MEMORY IS NOT CANCELED**.

If the Fault memory is canceled, the following display appears:

Rapid Data Transmission
Fault memory is canceled!

- use fault table to find and eliminate faults that have been printed out, see section D2-450
- test drive vehicle again and recall faults from Fault memory

cardiagn.com

Output checks, activating

Using VAG 1551 in Mode 1 (Rapid Data Transfer)

Notes

OUTPUT CHECKS can only be performed when the engine is NOT running.

OUTPUT CHECKS will stop being transmitted if the engine is started or if a speed impulse is recognized.

During the OUTPUT CHECKS diagnosis, the Carbon canister solenoid valves can be checked audibly or by touch. Avoid unnecessary background noise while audibly checking these components.

During the OUTPUT CHECKS, all of the components being checked will produce a sound or vibration except for the fuel injectors. Use the **US 1115** LED tester to check injector signals. Avoid unnecessary background noise while audibly checking those components.

If any of the components fail to sound or vibrate, check the component or the component triggering.

OUTPUT CHECKS occur in the following triggering sequence:

Fuel pump relay (**J 17**)
Fuel injector cylinder 1 (**N 30**)
Fuel injector cylinder 2 (**N 31**)
Fuel injector cylinder 3 (**N 32**)
Fuel injector cylinder 4 (**N 33**)
Fuel injector cylinder 5 (**N 83**)
Idle stabilizer valve (**N 71**)
Carbon canister solenoid valve I (**N 80**)
Carbon canister solenoid valve II (**N 115**)
EGR valve (**N 18**) (California ONLY)

cardiagn.com

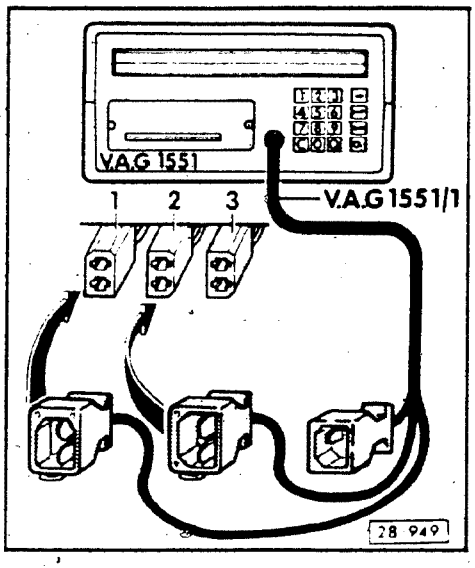

Output check diagnosis, activation

- switch **OFF** ignition
- connect **VAG 1551** Diagnostic tester to diagnostic connectors (above pedals in drivers side footwell) using **VAG 1551/1** connector harness as follows:
  - **BLACK** wire to **BLACK** diagnostic connector
  - **WHITE** wire to **BROWN** diagnostic connector
  - **BLUE** wire **NOT** used
- switch **ON** ignition but do NOT start engine
  - display should then alternate between the two following displays:

VAG SELF-DIAGNOSIS HELP

1 – **Rapid data transmission***

VAG SELF-DIAGNOSIS HELP

2 – **Blink code output***

* appears alternately

- press button 1 of **VAG 1551** Diagnostic tester to select operating mode "rapid data transmission"
  - following display will appear

Rapid data transmission HELP
Input address word XX

- press **0** and **1** buttons to select function **01** "Engine electronics"
  - following display will appear

Rapid data transmission Q
01 - **engine electronics**

- enter input by pressing **Q** button
  - control unit identification will be displayed: for example:

893906266D engine
Coding 11

- press ➡ button
  - following display will appear

Control unit does not respond! HELP

- press ➡ button
  - following display will appear

cardiagn.com

Rapid data transmission HELP
Select function XX

- press **0** and **3** buttons to select function **03** "Output check diagnosis"
  - following display will appear

Rapid data transmission Q
03 - Output check diagnosis

- enter input by pressing **Q** button
  - following display will appear

Output check diagnosis
Fuel pump relay (J 17)

- press ➡ button
  - fuel pump relay must close and fuel pump must run

If NO

- check fuel pump relay triggering
- push ➡ button
  - following display will appear

Output check diagnosis
Injector cylinder 1 (N 30)

- disconnect fuel injector harness connector
- connect **US 1115** LED tester across harness connector terminals using **VW 1594** adaptor kit
  - LED tester must light up
- briefly open throttle
  - LED tester must flicker approximately 5 times

If NO

- check fuel injectors, see section D2-450 starting with Fault code **4411**
- check each of the remaining injectors by first pushing the ➡ button which advances to the next output check in the sequence and then perform the injector electrical checks as described in the previous steps

Note

The fuel injectors will be triggered during OUTPUT CHECKS only if the engine has been run a short time before.

- press ➡ button
  - following display will appear

cardiagn.com

Output check diagnosis
Idle Stabilizer Valve (N 71)

- trigger valve by hitting ➡ button until by pressing button following display appears

Output check diagnosis
Carbon canister solenoid valve 1 (N 80)

If valve does NOT trigger:

- check triggering function, see Repair Group 24
- trigger valve by hitting ➡ button until by pressing button following display appears

Output check diagnosis
Carbon canister solenoid valve 2 (N 115)

If valve does NOT trigger:

- check triggering function, see Repair Group 24
- trigger valve by hitting ➡ button until by pressing button following display appears

(This display is for California ONLY)

Output check diagnosis
EGR valve (N 18)

If valve does NOT trigger:

- check triggering function, see Repair Group 24
- trigger valve by hitting ➡ button until by pressing button OUTPUT CHECKS ends

Note

California versions end by switching to the last component; EGR valve (**N 18**).

To repeat OUTPUT CHECKS:

- switch **OFF** ignition for 20 seconds minimum
- re-select **03** function via the **VAG 1551**

Note

When OUTPUT CHECKS are repeated the injectors are not triggered.

cardiagn.com

Test value block, reading

Requirements:
- engine coolant temperature 85°C (185°F) minimum
- all electrical consumers switched **OFF**
- A/C switched **OFF**

■ remove crankcase ventilation hose at engine block and plug off

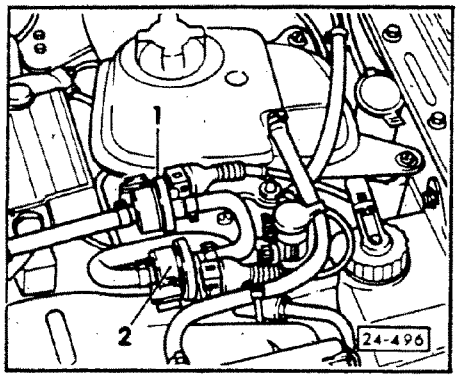

■ remove (**black**) harness connector from carbon canister solenoid valve **2** (**N 115**)
■ start engine and let idle
■ activate Fault memory, see section D2-330
- following display will appear

Rapid data transmission HELP
Select function XX

■ let engine continue to idle after activating Fault memory
■ press **0** and **8** buttons to select function **08** "Test block issued"
- following display will appear

Rapid data transmission Q
08 - Read test block value

■ enter input by pressing **Q** button
- following display will appear

Read test value block
1 2 3 4 5 6 7 8 9 10

Note
- values displayed on channels **1** to **10** are in decimal form and must be converted into physical values see section D2-360 for conversion chart
- if the specified values are not obtained for channels **4**, **5**, **6** or **8**: perform basic engine adjustments, see section D2-380
- when switching on the printer, the displayed channel value will be printed on the paper strip

If specified values are obtained on all channels:

■ push ➡ button
- following display will appear

Rapid data transmission Help
Select function XX

cardiagn.com

Function 04, display values

Values displayed on channels 1 to 10, conversion of units to physical values

Indicator field	Specification value	Corresponding test value	Description and calculation into physical values
1	135 . . . 160	+85°C . . . 110°C	Instantaneous coolant temp., displayed value minus 50 = __°C
2	1 . . . 255		Instantaneous engine load, a displayed value of 255 = Full load (theoretical) a lower value indicates less load
3	30 . . . 34	750 . . . 850 rpm	Instantaneous engine speed, displayed value times 25 = __ rpm
4	0 . . . 7 or 249 . . . 255	—	Idle stabilization learning value, with Manual Trans. in neutral position or with Automatic selector in position **P** or **N** (Learning value average = 0)
5	0 . . . 7 or 249 . . . 255	—	Learning value of idle stabilization system with Automatic in **D** position (Learning value average = 0)
6	126 . . . 130	—	Repeat idle stabilization signal (average value = 128)
7	0 . . . 120	—	See next page for a complete description of this channel.
8	118 . . . 138	—	Oxygen sensor control (average value = 128)
9	254, 255 0, 1, 2	—	Ignition distributor adjustment
10	—	—	From MPI-control unit calculated spark advance angle, indicator times 1.33 = __° from TDC.

Note

If the displayed values do not correspond to the specified values see the troubleshooting chart in section D2-370 for additional help.

cardiagn.com

Channel 7, interpreting

Channel 7 provides the technician with essential information that would have to be verified manually before performing the basic engine settings.

The ECU scans the system for certain conditions that must be met or for certain components that must be present or operative. It then assigns the numerical values (listed in the table below) to these conditions or components and **adds** them together to create the display value.

A value of zero will be assigned to conditions or components in the following chart that are NOT MET or NOT PRESENT.

Numerical value assigned IF:	Following condition or component is present
2	Transmission is in gear (Automatic)
4	Transmission is in **P** or **N** (Automatic)
8	Vehicle is equipped with a Manual Transmission
16	Idle switch is in closed position
32	A/C compressor is **ON**
64	A/C system is **ON**

Note

By analyzing the value displayed in channel **7** (using simple addition or subtraction) you can easily determine if a component or a condition is present or not.

Example: A vehicle with a Manual transmission at idle.

8 = Manual transmission coding
+**16** = Idle switch is **CLOSED**
24 = displayed value in channel 7

Note

If the idle switch had been **OPEN** instead: the final displayed value would have been **8** because a value of zero would have been assigned to the idle switch instead of **16**.

Also see section D2-370 for troubleshooting information regarding the signals that are used to construct these codes.

cardiagn.com

Function 04 display values, specifications and troubleshooting

This chart provides the required checks to be performed when the specified value is not attained.

Channel	Units display on VAG 1551	Possible causes	Fault elimination steps
1	greater than **160** or less than **85**	Open between coolant temperature sender (**G 62**) and MPI control unit (**J 192**)	Activate fault memory, see section D2-330 Check (**G 62**), see Repair Group 24
3	greater than **34**	Idle switch	Check idle switch, see Repair Group 24
		Valve is metering too much air	Check valve operation, see Repair Group 24
		Idle adjustment screw loose	Perform basic adjustment, see section D2-380
		Idle stabilizer valve gate (**N 71**) stuck or hard to move	Perform Output checks diagnosis, see section D2-340
	less than **3**	Idle stabilizer valve (**N 71**) is stuck or hard to move	Perform Output checks diagnosis, see section D2-340
		Idle adjustment screw loose	Perform basic adjustment, see section D2-380
4	deviating from specified value	Channel **7** indicated value deviates from specified value	See field **7**, below Perform Output checks diagnosis, see section D2-340
		Idle stabilizer valve (**N 71**) is stuck or hard to move	Eliminate cause, see Repair Group 24 Perform basic adjustment see section D2-380
5	specification deviation	Channel **7** indicated value deviates from specified value	See channel **7**, below Perform Output checks diagnosis, see section D2-340
		Idle stabilizer valve (**N 71**) is stuck or hard to move	Eliminate cause, see Repair Group 24 * Perform basic adjustment see section D2-380
		Valve is metering too much air	Check valve operation, see Repair Group 24

*Before performing basic adjustment, wait about 2 minutes with engine running, if specified value still not attained, perform basic adjustment, see section D2-380.

Note
The displayed value of channels **4, 5, 6** are set to their respective mean value during basic adjustment, since they influence each other.

cardiagn.com

Channel	Units display on VAG 1551	Possible causes	Fault elimination steps
7	Manual trans. with display value greater than **24**	A/C **ON**, or A/C compressor **ON**	Shut **OFF** A/C or if **OFF** check system per Repair Group 87
	Automatic trans. with display value greater than **20**	Coding of MPI-control unit incorrect	Check control unit version see section D2-400
		Engine signal to ground	Eliminate ground short from terminal **13** of harness connector **B** using wiring diagram
	Manual trans. with display value less than **24**	Actuate idle switch	Check idle switch see Repair Group 24
		Coding of MPI control unit incorrect	Check control unit version see section D2-400
	Automatic trans. with display value less than **20**	Idle switch activated	Check idle switch, see Repair Group 24
		Selector lever not in position	Place selector in position **P** or **N** and check for open circuit between transmission control unit and MPI control unit, using wiring diagram
8	display value less than **118**	Engine too rich	
		Exhaust system has leakage before catalyst	Check exhaust system for leakage, replace or repair as necessary
		Fuel system pressure too high	Check fuel system pressure see Repair Group 24
		Defective injector	Check fuel injectors, see Repair Group 24
		Air flow sensor (**G 70**) defective	Activate Fault memory, see section D2-330
		CO % content out of specification	Perform basic adjustment, see section D2-380
			*Adjust CO content, see Repair Group 24

*Before performing basic adjustment, wait about 2 minutes with engine running, if specified value still not attained, perform basic adjustment, see section D2-380.

cardiagn.com

Channel	Units display on VAG 1551	Possible causes	Fault elimination steps
8	display value greater than 138	Engine too lean	
		Incorrect amount of air to airflow sensor (G 70)	Eliminate problem, see Repair Group 24
		Fuel system pressure too low	Check fuel system pressure, see Repair Group 24
		Defective injector	Check fuel injector see Repair Group 24
		Air flow sensor (G 79) defective	Activate fault memory see section D2-330
		CO content out of specification	Perform basic adjustment see section D2-380 *Adjust CO content see Repair Group 24
9	specification deviation	Ignition distributor out of adjustment	Adjust distributor, see Repair Group 28

*Before performing basic adjustment, wait about 2 minutes with engine running, if specified value still not attained, perform basic adjustment, see section D2-380.

Note
The value of channels **4, 5, 6** are set to their respective mean value during basic adjustment, since they influence each other.

cardiagn.com

Basic adjustment of Engine using V.A.G. 1551 Diagnostic Tester

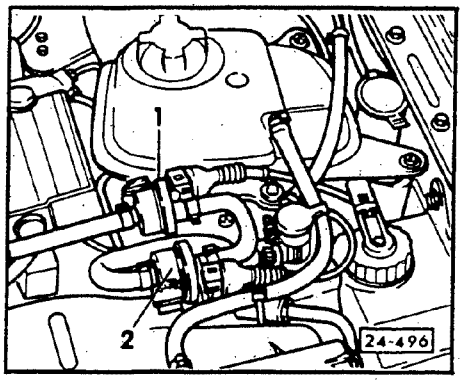

Requirement:
- see "Reading test value block", section D2-350

- reconnect (**black**) harness connector on carbon canister solenoid valve **2** (**N 115**)
- start engine and let idle
- read test value block for engine, continue to let engine idle
- perform basic adjustment of engine only if displayed values in channels **4**, **5**, **6** and **8** are out of tolerance
  - following display will appear

Rapid data transfer HELP
Select Function XX

- push **HELP** button to print list of possible functions
- push buttons **0** and **4** to select function **04** "Basic adjustment"
  - following display will appear

Rapid data transfer Q
04 - perform basic adjustment

- enter input by pressing **Q** button
  - following display will appear

System in basic adjustment
1 2 3 4 5 6 7 8 9 10

- enter input by pressing **Q** button

Note
- after performing the basic adjustment the values for channels **4** and **5** are set to zero and channel **6** to **128** (in the control unit)
- during basic adjustment, channel **10** (calculated spark advance angle) displays a value of **9**
- to convert the displayed channel values to physical units, see section D2-360

cardiagn.com

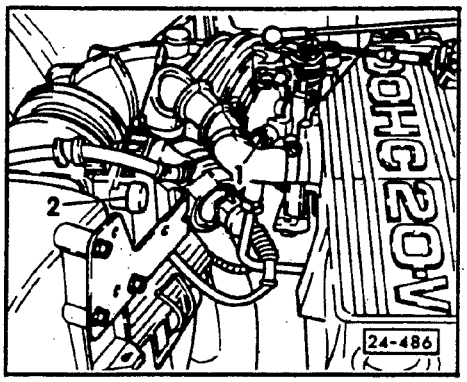

- turn adjustment screw **1** for idle speed on throttle valve until channel **3** display (instantaneous engine speed)
  - displays: **31**...33 (775...825 rpm)

Note

When in function **04** (basic adjustment) **ONLY** the idle speed is adjusted. With printer switched **ON**, the displayed channel value will be the one printed on the paper strip.

- press ➡ button on **VAG 1551**
  - following display will appear

Rapid data transfer HELP
Select function XX

Note

After performing basic adjustment (function **04**) select function **08**: "reading test value block" to see if the specified values were obtained.

cardiagn.com

Vehicle speed, checking using VAG 1551

Displaying on VAG 1551

- start engine and let idle
- activate fault memory, see section D2-330
- continue to let engine idle after activating fault memory

Note

Actual vehicle speed can be read directly on channel **15** in kilometers per hour, or as a voltage on channel **08**. See next page for additional information.

Rapid data transmission HELP
Select function XX

- push HELP button for an overview of possible functions
- push buttons **0** and **9** to select function **09** "Reading individual test value"
  - following display will appear

Rapid data transmission Q
09 – Reading individual test value

- enter input by pressing **Q** button
  - following display will appear

Read individual test value
Input channel number XX

Note

See channel description at end of this section for information regarding channel **XX** choices. The following **08** insertion is only an example.

- press **0** and **8** buttons
  - following display will appear

Read individual test value Q

- enter input by pressing **Q** button

Reading individual test value
Channel 08 Test value 170

Note

The display will continue to give active data until the –> button is pushed. If the printer button is pushed: the display for that exact moment will be printed.

cardiagn.com

- press ➡ button
  - following display will appear

Rapid data transmission HELP
Select function XX

To read alternative channel, re-select function **09** and continue as before.

Channel XX, input choices 08 and 15

Inputting **08** into channel **XX** will display the actual vehicle speed as a decimal number.

- calculate to a physical value in Volts with the following formula
  - Volts = displayed value times 0.08

If (with engine running) an indicated value is shown that is greater than **181** or smaller than **145**

- check voltage supply to MPI unit, see Repair Group 24

Inputting **15** into channel **XX** will display the actual vehicle speed (while vehicle is driven) in kilometers per hour (**km/h**).

To convert display into miles per hour (**mph**)

- multiply display by 0.62

cardiagn.com

CONTINUED IN THE

BEGINNING OF NEXT ROW

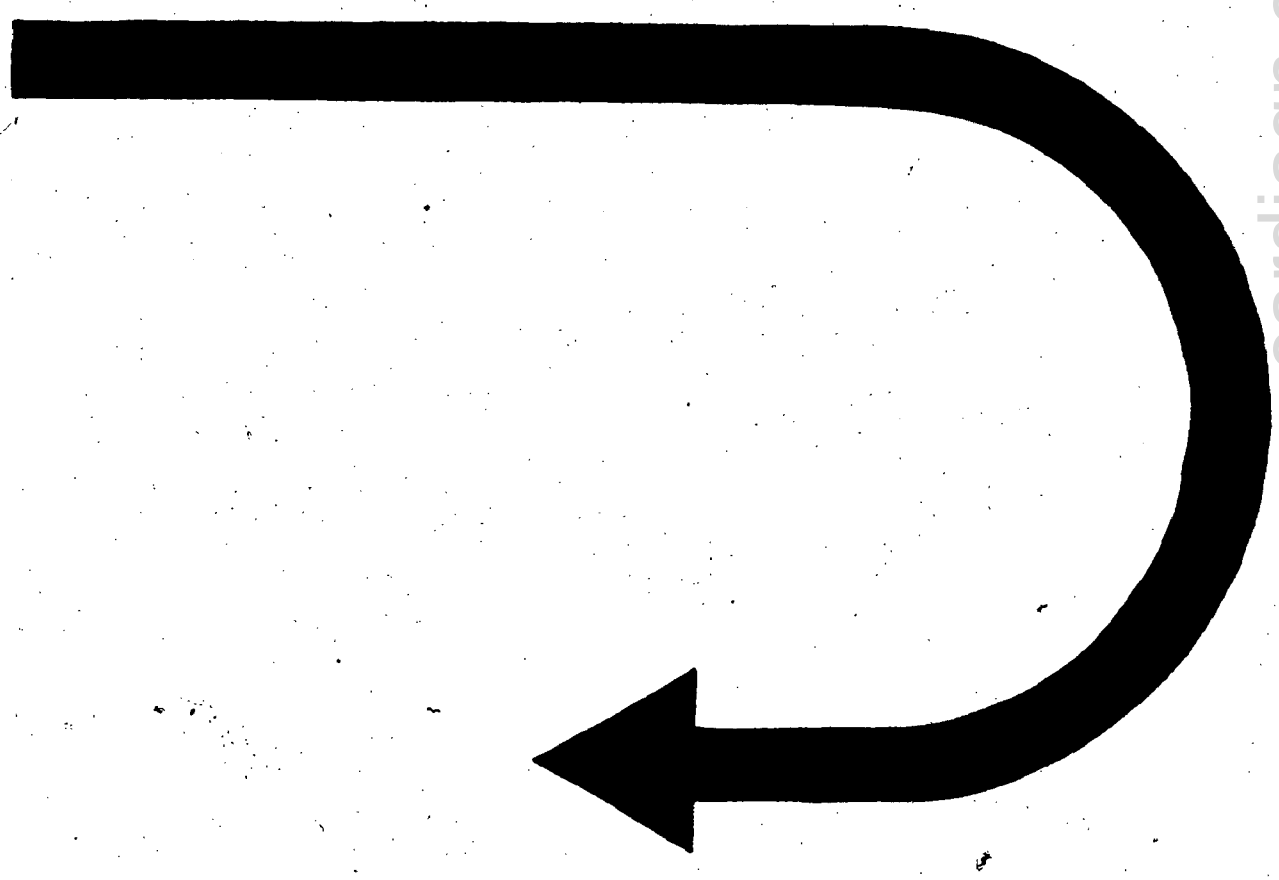

cardiagn.com

Control unit version, displaying using VAG 1551

- read test value block, see section D2-350
  - following display will appear

Rapid data transfer HELP
Select Function XX

- push **0** and **1** buttons to select function **01** "Activating control unit version"

Following display will appear:

Rapid data transfer Q
01-Activating control unit version

- enter input using **Q** button
  - following display is an example of control unit identification and coding that can appear

893906266D ENGINE
Coding 11

- see section D2-440 for coding variants

If the control unit code being displayed is incorrect:

- replace with control unit having correct code number
- push ➡ button
  - following display will appear

Rapid data transfer HELP

cardiagn.com

MPI Control Unit, removing and installing

- switch **OFF** ignition
- remove trim under glove compartment
- unscrew MPI-control unit from bracket and pull from retainer
- installation is reverse of removal

CAUTION

Do NOT remove or install the MPI-control unit (**J 192**) unless the ignition is switched **OFF**.

cardiagn.com

Test box VAG 1598, terminal numbering

Connecting to MPI-control unit

CAUTION

Do NOT have any adaptor cables from **VAG 1598** Test box connected to MPI control unit when working with the **VAG 1551** Diagnostic tester.

CAUTION

By disconnecting the harness connector from the MPI control unit: battery supply voltage is interrupted, thereby erasing the Fault memory.

- switch **OFF** ignition
- remove MPI control unit (**J 192**), see section D2-410
- connect adaptor cables **VAG 1598/11** and **VAG 1598/12** between MPI control unit and control unit harness connectors

To perform checks:

- connect **VAG 1598** test box to respective adaptor cable

CAUTION

Always refer to the wiring diagram for the correct terminal numbering. Do NOT assume that the **VAG 1598** Test box numbers will correspond with the adaptor connections used for your troubleshooting application.

The **VAG 1598** adaptor cables have been designed to adapt to a broad range of connectors. To keep the number of necessary cables and resulting cost to a minimum, each adaptor must connect to a variety of systems.

The repair procedures in this manual will tell you when re-numbering at the Test box occurs.

cardiagn.com

The following charts show the numbering correspondence between the actual terminal number used in the MPI control unit harness connector and the arbitrary number that corresponds to it in the **VAG 1598** Test box after the adaptor cable has been connected to it.

MPI control unit Harness connector A Terminal numbering	Corresponding VAG 1598 Test box Terminal numbering (using adaptor cable VAG 1598/11)
1	41
2	42
3	43
4	44
5	45
6	46
7	47
8	48
9	49
10	50
11	51
12	52

MPI control unit Harness connector B Terminal numbering	Corresponding VAG 1598 Test box Terminal numbering (using adaptor cable VAG 1598/11)
1	21
2	22
3	23
4	24
5	25
6	26
7	27
8	28
9	29
10	30
11	31
12	32
13	33
14	34
15	35
16	36
17	37
18	38
19	39
20	40

cardiagn.com

MPI control unit Harness connector C Terminal numbering	Corresponding VAG 1598 Test box Terminal numbering (using adaptor cable VAG 1598/11)
1	1
2	2
3	3
4	4
5	5
6	6
7	7
8	8
9	9
10	10
11	11
12	12
13	13
14	14
15	15
16	16

MPI control unit Harness connector D Terminal numbering	Corresponding VAG 1598 Test box Terminal numbering (using adaptor cable VAG 1598/12)
1	1
2	2
3	3
4	4
5	5
6	6
7	7
8	8
9	9
10	10
11	11
12	12
13	13
14	14
15	15
16	16

cardiagn.com

Diagnostic connectors, checking

- diagnostic connectors are located in drivers side footwell above pedals

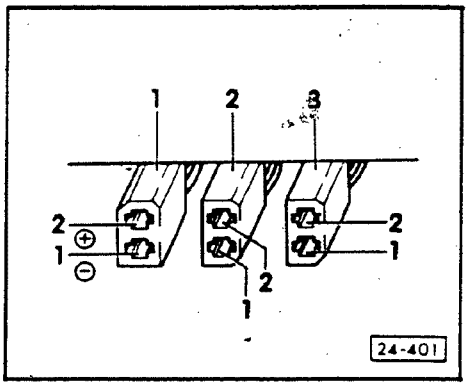

BLACK diagnostic connector 1 (voltage supply).

Terminal 1 (ground).

Terminal 2 (positive from terminal 30, protected via fuse 21).

- check continuity of connections using **US 1119** multimeter
- switch **OFF** ignition
- connect test box **VAG 1598** using adaptor cable **VAG 1598/11**

BROWN diagnostic connector 2 (Rapid data transmission)		
Diagnostic connector terminal	**Control unit Harness connector C**	**VAG 1598 test box with VAG 1598/11 adaptor cable**
1	13	13
2	12	12

BLUE diagnostic connector 3 (Blink code output)		
Diagnostic connector terminal	**Control unit Harness connector C**	**VAG 1598 test box with VAG 1598/11 adaptor cable**
1	not in use	not in use
2	14	14

cardiagn.com

MPI-control unit (J 192), coding variants

Note

During control unit identification there will be a two digit code displayed by the **VAG 1551**. The first digit indicates transmission type (standard or automatic). The second digit indicates whether an EGR system is installed or not.

Example:

Standard transmission without EGR ‹ – **11** – ›

Following combinations are possible:

01 = Automatic transmission with EGR

00 = Automatic transmission without EGR

10 = Standard transmission with EGR

11 = Standard transmission without EGR

If the coding does not correspond to the vehicle hardware:

- connect Test box **VAG 1598** to control unit harness connector **B** using adaptor cable **VAG 1598/11**
- using wiring diagram, check MPI control unit and **6-pin** coding connector next to MPI control unit as follows
  - vehicles with automatic transmission, there must be a bridge (continuity) between terminals **1** and **5** of coding connector and terminal **5** must be connected to ground
  - vehicles with standard transmission should not have a bridge (must be open) between terminal **1** and **5** of coding connector
  - vehicles with EGR: terminal **16** of control unit harness connector **B** must be connected to ground

If coding connector and wiring **OK**:

- replace MPI control unit

cardiagn.com

Fault troubleshooting, chart

The following table lists all of the possible faults which can be detected by the MPI control unit (**J 192**) and displayed by the **VAG 1551** Diagnostic tester. Problems which occur occasionally or faults which were not canceled from the fault memory are displayed as "sporadically occurring faults".

If components are displayed as faulty, using the wiring diagram, check the wiring to the components for short or open circuits.

Before correcting a fault or replacing components:

- check MPI control unit ground connections in control unit harness connector **D** terminals **1**, **2**, **3** and **16**
  - must not be greater than 0.2 Ohms
- check ground connections on intake manifold for corrosion or damage
- check fuel pump relay, see Repair Group 24

Fault code description	Problem	Symptom	Repair
1111 Control unit (**J 192**) defective	Ground connections to (**J 192**) harness connector **D**, terminals **1**, **2**, **3** and **16**	Engine does not start	Check ground connections using wiring diagram
	(**J 192**) defective	—	Replace (**J 192**)
1231 Trans speed sender (**G 68**) *No signal	Open connection between instrument cluster and (**J 192**)	Engine shuts off while decelerating with clutch engaged	Read individual test value channel **15** Check wiring between I/P harness connector and (**J 192**) for open circuit using wiring diagram

*This display is shown in addition to the component.
Note for fault code **00281:**
If this fault is indicated, check first if the speedometer is **OK**.
If speedometer is faulty; disregard fault indicator.

cardiagn.com

Fault code description	Problem	Symptom	Repair
2111 Engine speed sender (**G 28**)	Metal chips on (**G 28**)	Engine does not start	Check (**G28**), see Repair Group 28
*No signal	(**G 28**), mounting base loose		Tighten base
*Mechanical fault	Distance from (**G 28**) to ring gear of flywheel larger than 1.2 mm	Engine misfires	Repair short or open circuit using wiring diagram
	Broken teeth on ring gear of flywheel	—	—
	Open circuit between 3 pin connector in engine compartment and (**G 28**)	—	—
	Open circuit between (**J 192**) and (**G 28**)	—	—
	Short circuit between Harness connector **C**, terminals **1**, **2**, **3** and (**J 192**) shielding or engine ground	—	—
	Open circuit in shielding of (**G 28**)	—	—
	3 pin connector from (**G 28**) and (**G 4**) in engine compartment reversed	Engine does not start	Reverse connections
	(**G 28**) faulty	—	—
	Input for (**G 28**) in (**J 192**) faulty	—	—

*One of these displays is shown in addition to the component.

cardiagn.com

Fault code description	Problem	Symptom	Repair
2112 Ignition reference sender (**G 4**)	Mounting base of (**G 4**) loose	Fault occurs before engine start	Check (**G 4**) see Repair Group 24
*No change in signal	Distance from (**G 4**) to pin on flywheel greater than 1.2 mm	Engine will not start	—
	Pin on flywheel bent or damaged	—	—
	Open circuit between 3 pin connector in engine compartment and (**G 4**)	—	—
	Short circuit between harness connector **C**, terminals **4, 5, 6** and (**J 192**) shielding or engine ground	—	—
	Open circuit in shielding of (**G 4**)	—	—
	3 pin connector from (**G 4**) and (**G 28**) have interchanged harness connectors	—	Reverse harness connectors
	(**G 4**) defective	—	Replace (**G 4**)
	Input for (**G 4**) in (**J 192**) defective	—	Replace (**J 192**)

*This display is shown in addition to the component.

cardiagn.com

Fault code description	Problem	Symptom	Repair
2113 Hall sender (**G 40**) *Short to ground	No power to (**G 40**) from (**J 192**)	Engine lacking power to full load	Check (**G 40**), see Repair Group 28
*Disconnection/short circuit to + (plus)		Emission measurements out of specification	
	Signal lead to (**J 192**) open or short circuit to ground in signal wires of harness connector **C**, terminals **7**, **8** and **9**	—	—
		High fuel consumption	
	Open circuit between 3 pin connector in engine compartment and (**J 192**)	—	—
	Position of reference pin (**G 4**) incorrect	—	Repair or replace, see Repair Group 24
	(**G 40**) defective	—	Replace (**G 40**)
	Input for (**G 40**) in (**J 192**) defective	—	Replace (**J 192**)
*One of these displays is shown in addition to the component.			
2114 Hall sender not on reference point	Belt broken		Check V-belt, see Repair Group 15
*Mechanical fault	Hall sender (**G 40**) out of adjustment		Read test value block channel 9 section D2-370
	Flywheel reference pin for ignition timing		Check pin (**G 4**), see Repair Group 28
*This display is shown in addition to the component.			

cardiagn.com

Fault code description	Problem	Symptom	Repair
2121 Idle switch (**F 60**) *Short to ground	(**F 60**) out of adjustment	Idle stabilization system switches to control	Read test value block, channel 7, section D2-370
*Disconnection/short circuit to + (plus)	Throttle valve sticking	Idle speed too high	Adjust throttle cable, see Repair Group 20
	Floor mat pressing against accelerator pedal	—	—
	Throttle cable out of adjustment	—	—
	Open circuit between harness connector **A**, terminal **9** (**J 192**)	—	Repair circuit using wiring diagram
	Input for (**F 60**) in (**J 192**) defective	—	Replace (**J 192**)
	Harness connector **A**, terminal **9** from (**J 192**) short circuited to ground	—	Repair short circuit
	Moisture in throttle valve harness connector	—	Dry out or replace
*One of these displays is shown in addition to the component.			
2141 First knock regulation	Knock regulation module in (**J 192**) defective or (**J 192**) defective	—	Replace (**J 192**)
*Maximum control limit exceeded	Knock sensor 1 (**G 61**) loose	—	Re-torque to 10 Nm (7 ft lb)
	Affects cylinders 1 and 2	—	—
	Poor fuel quality, less than 90 RON	Limited loss of power	Use fuel with at least 90 RON
	Abnormal engine noises (auxiliary units loose)	Top speed is insufficient	—
	Open circuit in shielding of (**G 61**)	Engine running rough	Repair open circuit
*This display is shown in addition to the component.			

cardiagn.com

Fault code description	Problem	Symptom	Repair
2142 Knock sensor 1 (**G 61**) *No change in signal	(**G 61**) loose or connector corroded	High fuel consumption	Re-torque, 10 Nm (7 ft lb)
	Open or short circuit between (**G 61**) and (**J 192**)	Power loss Impact-like power loss (like mis-firing)	Repair open or short circuit
	Short circuit between (**G 61**) and ground or between (**G 61**) and shielding	—	—
	(**G 61**) defective	—	Replace (**G 61**)
	Input for (**G 61**) in (**J 192**) defective	—	Replace (**J 192**)
2143 Second knock regulation *Maximum control limit exceeded	Poor fuel quality, less than 90 RON	Limited loss of power	Use fuel with at least 90 RON
	Affects cylinders 3, 4, and 5	Slightly higher fuel consumption	—
	(**G 66**) Knock sensor 2 is loose	Top speed is insufficient	Re-torque 10 Nm (7 ft lb)
	Abnormal engine noises (auxiliary units loose)	Engine running rough	Tighten loose components
	Open circuit in (**G 66**) shielding	—	Repair open circuit
	Knock regulation module in (**J 192**) defective or (**J 192**) defective	—	Replace (**J 192**)
2144 Knock sensor 2 (**G 66**) *No change in signal	(**G 66**) loose or connector corroded	High fuel consumption	Re-torque sensor 10 Nm (7 ft lb)
	Open or short circuit between (**G 66**) and (**J 192**)	Power loss impact-like (like misfiring)	Repair open or short circuit
	Short circuit between (**G 66**) and ground or between (**G 66**) and shielding	—	—
	(**G 66**) defective	—	Replace (**G 66**)
	Input for (**G 66**) in (**J 192**) defective or (**J 192**) defective	—	Replace (**J 192**)

*This display is shown in addition to the component.

cardiagn.com

Fault code description	Problem	Symptom	Repair
2212 Throttle potentiometer (**G 69**)	Open circuit between (**G 69**) and (**J 192**)	Power loss	Check (**G 69**), see Repair Group 24
*Disconnection/short to ground *Implausible signal	Short circuit to plus or ground in (**G 69**) or open circuit between (**G 69**) and (**J 192**)	—	—
	(**G 69**) and (**J 192**) defective	—	Replace
	Moisture or corrosion in (**G 69**) harness connector	—	—
*One of these displays is shown in addition to the component.			
2232 Air mass sensor (**G 19**)	Fuse (**S 27**) defective	Limp home mode	Check (**G 70**), see Repair Group 24
*Short circuit to + (plus)	Open circuit between (**G 70**) and (**J 192**)	—	
*Disconnection/short to ground	Voltage supply to (**G 70**) open or shorted to ground	Poor fuel intake	Repair using wiring diagram
	Short circuit to plus or ground in (**G 70**), or open circuit between (**G 70**) and (**J 192**)	Reduced power Under certain circumstances engine quits after starting	—
	(**G 70**) defective	—	Replace (**G 70**)
	Input for (**G 70**) in (**J 192**) defective	—	Replace (**J 192**)
*One of these displays is shown in addition to the component.			
2233 Air flow sensor reference voltage (**G 70**)	Open circuit between (**J 192**) harness connector **A** terminals **5** and **3**	—	Check (**G 70**), see Repair Group 24
*Disconnection/ short circuit to + (plus)	Short circuit between (**J 192**) harness connector **A** terminals **5** and **3** and + (plus)	—	Repair open or short circuit using wiring diagram
*This display is shown in addition to the component.			

cardiagn.com

Fault code description	Problem	Symptom	Repair
2234 Supply voltage (Info)	Supply voltage to (**J 192**) greater than	Permanent damage to (**J 192**)	Check voltage
*Signal too low	Alternator defective	—	Check (**J 192**), see Repair Group 28
	Engine started with two batteries in series	Idle speed out of range	Check charging condition of battery, see Repair Group 27
	Poor ground connection to (**J 192**)	Voltage below 6 volts	
	Current drain with ignition switched OFF	Engine will not start/crank	Read individual test value (channel **8**) see section D2-370
	Battery discharged	—	
*This display is shown in addition to the component. Note for Fault Code **2234**: Ignore fault if displayed as sporadic (intermittent). This fault may be stored if the engine is idling for a long period of time with heavy electrical consumption and a battery that is severely drained.			
2242 CO-potentiometer (**G 74**)	Fuse (**S 27**) defective	Poor acceleration	Check (**G 74**), see Repair Group 24
*Disconnection/or short circuit to + (plus)	Open circuit between (**G 74**) and (**J 192**)	Poor fuel intake	Read test value channel **8**
	Short circuit to plus in (**G 74**) or open circuit betwen (**G 74**), and (**J 192**)	CO not adjustable	—
*This display is shown in addition to the component.			

cardiagn.com

Fault code description	Problem	Symptom	Repair
2312 Coolant temp. sensor (**G 62**)	Short circuit to ground	Cold starting difficulties at low temps	Check (**G 62**), see Repair Group 24
*Short circuit to ground *Disconnection/short circuit to + (plus)	Moisture in (**G 62**) harness connector	Poor idle and acceleration during warmup	Read test value channel 1, see section D2-370
	Open circuit between (**G 62**) and (**J 192**)	—	—
	Resistance between (**G 62**) and (**J 192**)	—	—
	(**G 62**) defective	—	Replace (**G 62**)
	Input from (**G 62**) in (**J 192**) defective	—	Replace (**J 192**)
*One of these displays is shown in addition to the component.			
2341 Oxygen sensor	Fuse (**S 28**) defective	CO before catalyst less than 0.3%	Read test value channel 8, see section D2-370
*Control limit exceeded or underexceeded	Fuel tank empty	High fuel consumption	Fill fuel tank
	Fuel system pressure too low	—	Check fuel system pressure, see Repair Group 24
	Defective: spark plug, connectors, ignition wiring, distributor cap and rotor	—	Check components and replace if necessary
	Intake air leak after (**G 70**) Air mass sensor	Rich exhaust	Repair leak
	Exhaust leak in front of catalyst	Spark plug fouling	Repair leak
	Oxygen sensor faulty	CO before catalyst greater than 1%	Check Oxygen sensor, see Repair Group 24
	Solenoid valve 1 (**N 80**), sticking	—	Check (**N 80**), see Repair Group 24
*This display is shown, in addition to the component.			

cardiagn.com

Fault code description	Problem	Symptom	Repair
2342 Oxygen sensor (**G 39**) *No signal *Short circuit to + (plus) *Short circuit to ground	Open circuit to (**J 192**)	Emissions NOT within specs	Repair open circuit
	(**G 39**) heater inoperative	—	Check OXS control, see Repair Group 24
	Fuse (**S 28**) defective		
	Heater resistor in sensor defective	—	Read Test value channel **8** (constant **128**) see section D2-370
	Wiring in (**G 39**) heater defective, short circuit to ground in signal wire	—	
	Short circuit in signal wire to shielding	—	—
	(**G 39**) defective	OXS goes to open loop	Replace (**G 39**)
*One of these displays is shown in addition to the component.			
2411 EGR System *Short circuit to ground *Mechanical failure	Vacuum lines removed or bent	Poor idle and starting characteristics, shaking	Check EGR system, see Repair Group 26
	(**G 98**) EGR temperature sensor faulty	—	—
	Fuse (**S 28**) defective	—	Replace fuse
	(**N 121**) EGR frequency valve defective	—	—
	Open circuit between (**G 98**) (**N 121**) and (**J 192**)	—	Repair open circuit, using wiring diagram
*One of these displays is shown, in addition to the component. This Fault Code for California vehicles ONLY.			

cardiagn.com

Fault code description	Problem	Symptom	Repair
4312 EGR frequency valve (**N 18**) *Implausible signal *Open circuit/short circuit to ground	Short circuit to ground in (**N 18**) or open circuit between (**N 18**) and (**J 192**) Open circuit between (**N 18**) and (**J 192**)	Engine runs rough —	Check (**N 18**), see Repair Group 26 Repair open or short circuit using wiring diagram
This Fault Code for California vehicles ONLY. *One of these displays is shown, in addition to the component.			
4331 Carbon canister solenoid valve 2 (**N 115**) *Disconnection/short circuit to + (plus) *Disconnection/short circuit to ground	Short circuit to plus in (**N 115**) or open circuit between (**N 115**) and (**J 192**) Fuse (**S 28**) defective Open circuit	Poor response in part of load range Fuel odors —	Check (**N 115**), see Repair Group 24 — Replace fuse Repair open circuit using wiring diagram
*One of these displays is shown, in addition to the component.			
4343 Carbon canister solenoid valve 1 (**N 80**) *Short circuit to + (plus) *Short circuit/open circuit to ground	Short circuit to plus in (**N 80**) or between (**N 80**) and (**J 192**) Short circuit to ground in (**N 80**) or between (**N 80**) and (**J 192**) Fuse (**S 28**) faulty Open circuit	Poor response in part of load range Fuel odors — —	Check (**N 80**), see Repair Group 24 — — —
*One of thse displays is shown, in addition to the component.			

cardiagn.com

Fault code description	Problem	Symptom	Repair
4411 Fuel injector cylinder 1 (**N 30**)	Short circuit to ground	Engine runs rough	Check injectors, see Repair Group 24
*Short to minus	(**N 30**) resistance incorrect	—	
*Short to plus	Open circuit	Possible engine stall	Repair open circuit, using wiring diagram
	Fuse (**S 13**) faulty	—	
	Short circuit to positive at harness connector or injector		
*One of these displays is shown, in addition to the component.			
4412 Fuel injector cylinder 2 (**N 31**)	Short circuit to ground	Engine runs rough	Check injectors, see Repair Group 24
*Short to minus	(**N 31**) resistance incorrect	—	
*Short to plus	Open circuit	Possible engine stall	Repair open circuit, using wiring diagram
	Fuse (**S 13**) faulty	—	
	Short circuit to positive at harness connector or injector		
*One of these displays is shown, in addition to the component.			
4413 Fuel injector cylinder 3 (**N 32**)	Short circuit to ground	Engine runs rough	Check injectors, see Repair Group 24
*Short to minus	(**N 32**) resistance incorrect	—	
*Short to plus	Open circuit	Possible engine stall	Repair open circuit, using wiring diagram
	Fuse (**S 13**) faulty	—	
	Short circuit to positive at harness connector or injector		
*One of these displays is shown, in addition to the component.			

cardiagn.com

Fault code description	Problem	Symptom	Repair
4414 Fuel injector cylinder 4 (**N 33**)	Short circuit to ground	Engine runs rough	Check injectors, see Repair Group 24
*Short to minus	(**N 33**) resistance incorrect	—	
*Short to plus	Open circuit	Possible engine stall	Repair open circuit, using wiring diagram
	Fuse (**S 13**) faulty	—	
	Short circuit to positive at harness connector or injector		
*One of these displays is shown, in addition to the component.			
4421 Fuel injector cylinder 5 (**N 83**)	Short circuit to ground	Engine runs rough	Check injectors, see Repair Group 24
*Short to minus	(**N 83**) resistance incorrect	—	
*Short to plus	Open circuit	Possible engine stall	Repair open circuit, using wiring diagram
	Fuse (**S 13**) faulty	—	
	Short circuit to positive at harness connector or injector		
*One of these displays is shown, in addition to the component.			
4431 Idle stabilizer valve (**N 71**)	Short circuit to plus in (**N 71**) or between (**N 71**) and (**J 192**)	Engine speed out of range at operating temp.	Check (**N 71**), see Repair Group 24
*Short to plus *Short to ground	Short circuit to ground in (**N 71**) or between (**N 71**) and (**J 192**)	Engine might die when cold	—
	Open circuit	Engine surges	—
*One of these displays is shown, in addition to the component.			

cardiagn.com

Fault code description	Problem	Symptom	Repair
4444 No fault recognized	If a complaint exists, fault not recognized by self diagnosis	—	—
0000	—	—	—
End of output	—	—	—

cardiagn.com

MPI System, troubleshooting guide

CAUTION

Observe safety precautions in Repair Groups 24 and 28.

Requirements:

- customer questioned using "Check list"
- voltage supply **OK** (alternator battery)
- starter turns over **OK**
- engine mechanics **OK**
  (Especially compression pressures, valve timing)
- electrical wiring and connections **OK**
  (Not corroded, terminals not pushed back)
- vacuum hoses **OK**
  (Not disconnected or leaking)

If complaint "Unsatisfactory performance" is given; also check for:

- tire sizes / Tire type per manufacturer's recommendation
- no speed reducing accessories installed
  (Roof rack etc.)
- break in completed
- wheels freely to rotate (Brakes, wheel bearings **OK**)

cardiagn.com

Symptom

1 ENGINE DOES NOT START/HARD TO START	2 POOR DRIVEABILITY DURING COLD/WARM UP PHASE	3 IDLING SPEEDS DEFECTS	4 POOR PERFORMANCE, INCREASED FUEL CONSUMPTION	5 UNEVEN RUNNING THROUGHOUT SPEED RANGE	6 EXCESSIVE FUEL CONSUMPTION	Checking and Adjusting Operations	See:
X	X	X	X	X	X	First interrogate Fault memory and eliminate displayed faults before further fault finding	Repair Group D2
X	X	X	X	X	X	Perform output checks	
	X	X	X	X	X	Basic adjustment of engine with **VAG 1551**	
			X			Check basic mechanical settings of engine	Repair Group 13
X						Insufficient fuel in tank, minimum amount 10 ltr. (2-1/2 gallons)	Repair Group 20
X	X	X		X		Check fuel pump	
X						Check fuse17	Repair Group 24
X	X	X	X	X	X	Check intake air system for leaks	
X			X		X	Check system and residual pressures	
X						Check MPI control unit voltage supply	
		X				Check carbon canister system	
			X		X	Check 2 stage inlet manifold change-over	
		X				Check exhaust gas recirculation	Repair Group 24 and/or 26
X	X		X		X	Check spark plugs	Repair Group 28
X	X		X		X	Check spark plug connectors and high tension cables	
X	X		X			Check ignition coils and power output stages	

cardiagn.com

Index

Clutch
- assembly 30.8

Clutch disc
- checking runout 30.10

Clutch hydraulic
- assembly 30.4

Clutch pedal
- assembly 30.2
- clevis adjusting/checking 30.3

Clutch, pressure plate
- checking 30.9
- replacing 30.9

Clutch release
- assembly 30.6

Clutch troubleshooting
- charts 30.11

cardiagn.com

Note

Lubricate all bearing and friction surfaces with MoS_2 grease.

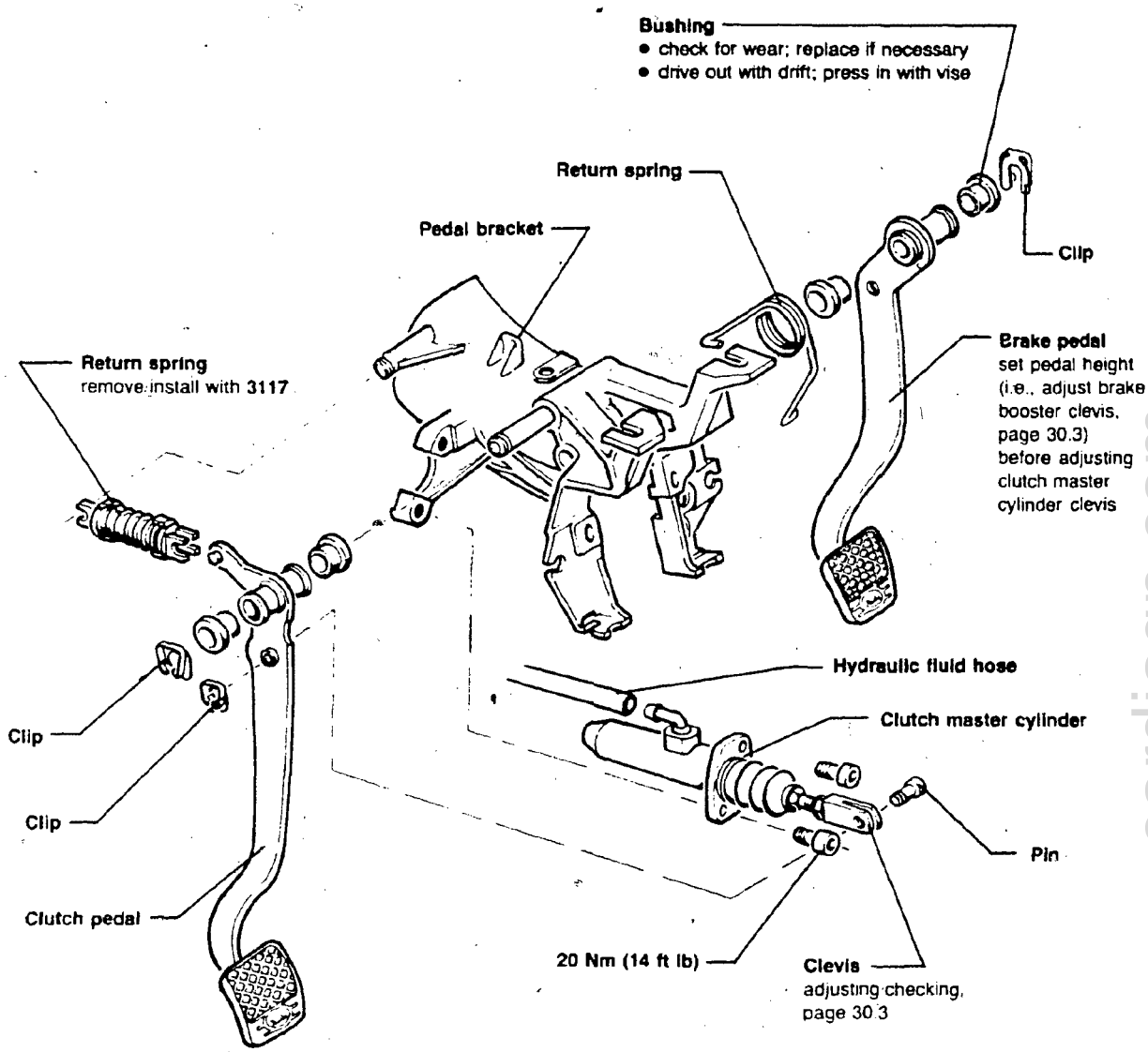

CAUTION

If clutch pedal does not return properly even though the clevis is set correctly, this may be due to:

- air in hydraulic system
- stiffness in pedal bushings or return spring

Brake pedal travel must not be shortened by excess carpeting.

cardiagn.com

Clevis — clutch master cylinder, adjusting/checking

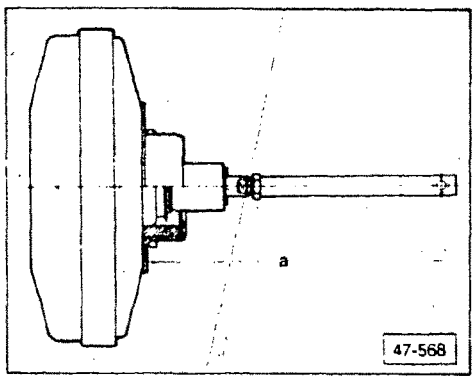

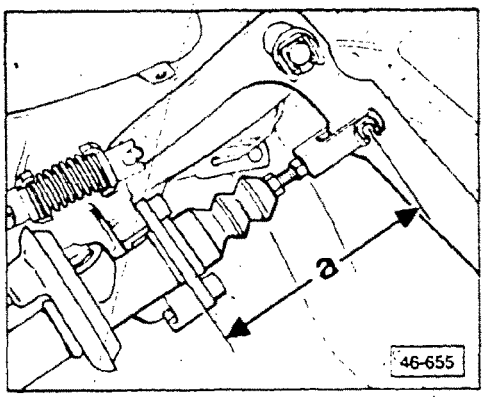

Note

Prior to adjusting clevis for clutch master cylinder, ensure that clevis for brake booster is adjusted to give proper brake pedal height.

- check brake booster clevis adjustment
  a = 269.0 mm + 0.5 mm
  (10.590 in. + 0.02 in.)

Note

When measuring, the push rod must be perpendicular to the surface of the brake booster.

Adjusting

- adjust clevis for clutch master cylinder
  a = 116.0 mm + 0.2 mm
  (4.566 in. + 0.007 in.)

Checking

- be sure that clutch pedal is approximately 10 mm (3.8 in.) higher than brake pedal
- be sure that spring returns clutch pedal
- be sure that pedal does not touch bracket in rest position

> **CAUTION**
>
> Insufficient clutch pedal/bracket clearance results in premature wear.

cardiagn.com

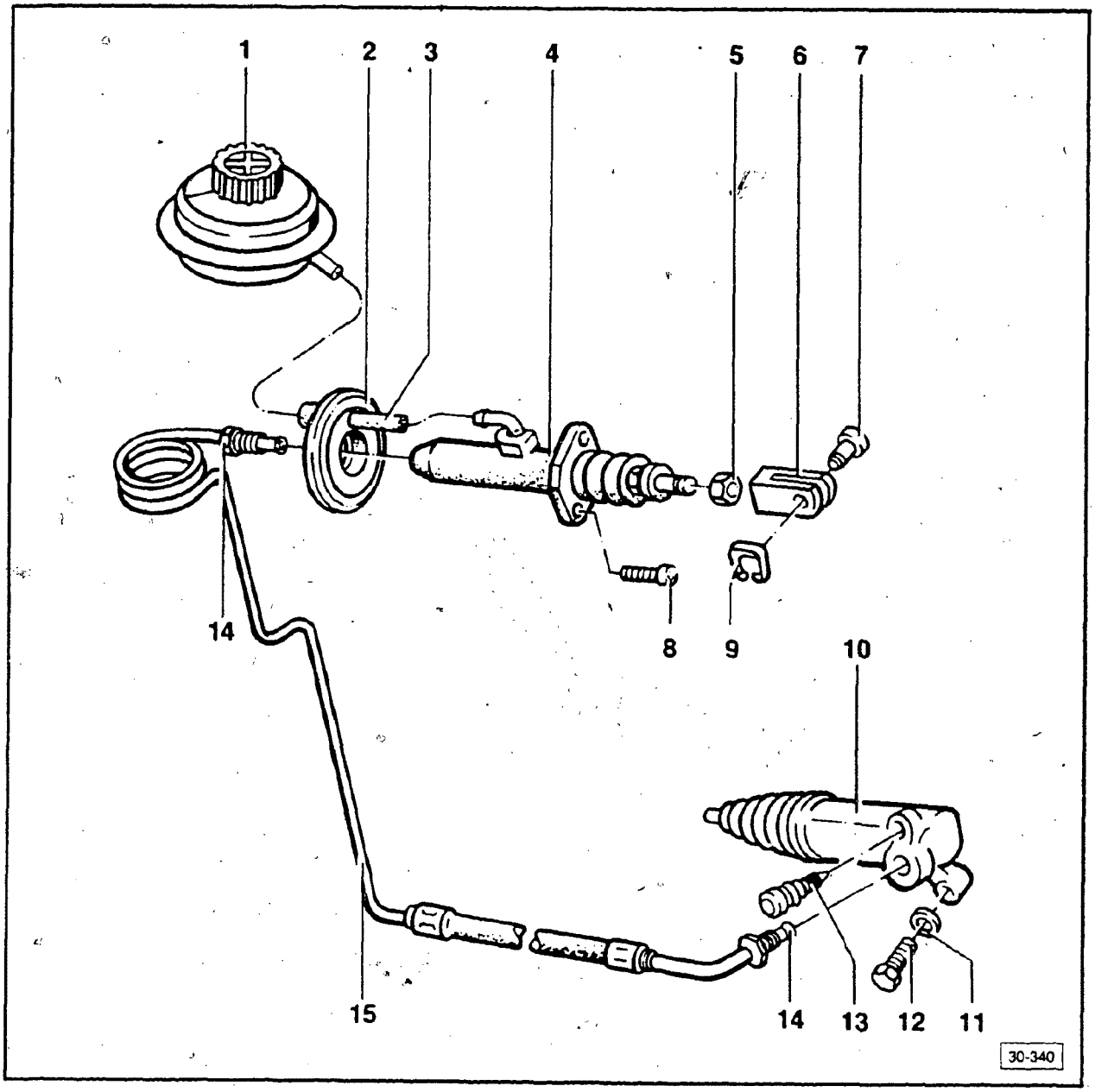

1 — **Hydraulic fluid reservoir**

2 — **Seal**

3 — **Hydraulic fluid hose**

4 — **Clutch master cylinder**

5 — **Lock nut**

6 — **Clevis**
adjusting checking, page 30.3

7 — **Pin**

8 — **20 Nm (14 ft lb)**

9 — **Retainer**

10 — **Slave cylinder**
if slave cylinder has plastic support ring, lightly grease outer surface of ring when installing

CAUTION

Once slave cylinder has been removed, do not depress clutch pedal.

11 — **Washer**

12 — **25 Nm (18 ft lb)**

cardiagn.com

13 — Bleeder valve
- open only to bleed
- use brake bleeder **US 1116**
- maximum working pressure: 25 bar (36.25 psi)

14 — Line connector — 15 Nm (11 ft lb)

15 — Pressure line
with pressure hose

cardiagn.com

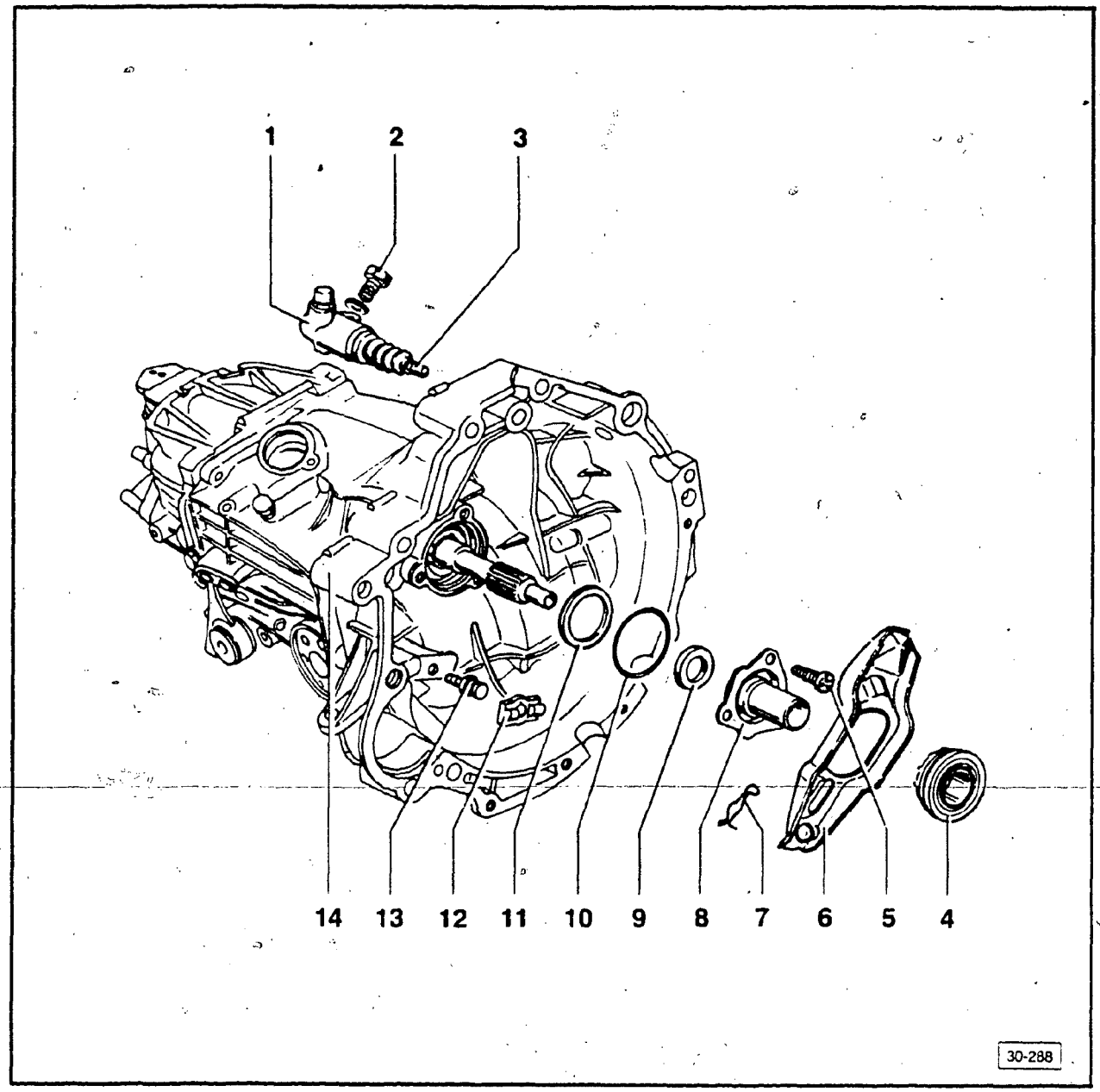

Note

Before installing clutch disc, clean any corrosion or grease residue from input shaft splines, and also from hub teeth if disc is to be re-used. Apply extremely light coating of grease, Part No. **G 000 100**, to splines of input shaft only. Place disc on shaft and move back and forth until disc hub slides easily. Remove **all** excess grease.

1 — **Clutch slave cylinder**
when installing, pry with a lever until bolt can be inserted

2 — **25 Nm (18 ft lb)**

3 — **Push rod**
grease end

4 — **Release bearing**
- wipe clean only; do not wash
- replace if noisy

5 — **Torx bolt — 35 Nm (26 ft lb)**
self-locking; always replace

6 — **Release lever**
- wipe clean; do not wash
- replace if noisy

7 — **Retaining spring**
secure on release lever

8 — **Guide sleeve**

cardiagn.com

9 — **Oil seal for input shaft**
- extract from sleeve with **VW 681**
- drive in fully with **US 4450**

10 — **O-ring**
always replace

11 — **Washer**
small diameter (curved side) faces guide sleeve

12 — **Spacer**

13 — **Ball stud**
25 Nm (18 ft lb)

14 — **Transmission**

cardiagn.com

Note

Remove transmission to repair clutch.

CAUTION

Clutch discs and pressure plates are protected against corrosion. Only the contact surface may be cleaned, as otherwise the service life of the clutch will be considerably shortened.

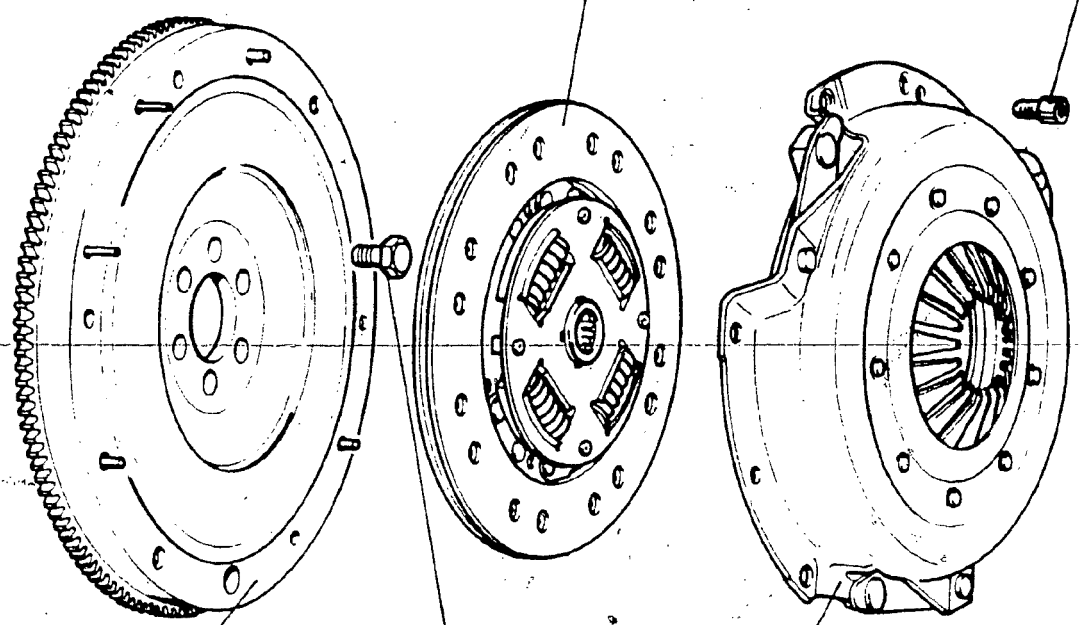

CAUTION

Clutch discs and pressure plates with damaged or loose rivets should be replaced.

30-291

cardiagn.com

Clutch pressure plate, replacing/checking

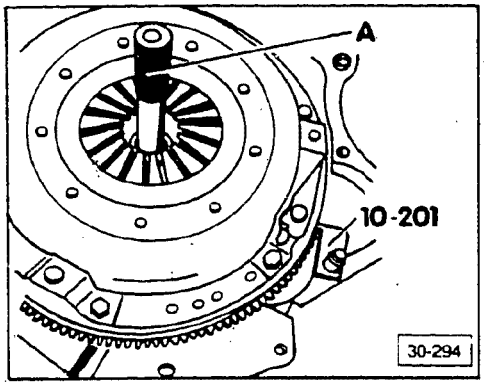

Replacing

- lock flywheel in position
- loosen/tighten bolts evenly and diagonally
  - use pilot tool **A** = **3176**

Note

Reposition holder **10-201** during tightening sequence.

> **CAUTION**
>
> Pressure plate must make complete contact with flywheel before installing the mounting bolts.
>
> Never force pressure plate. Dowel pins/ holes could become distorted.

Checking

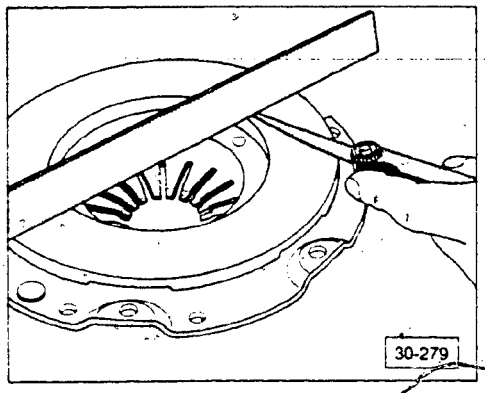

- check for cracks, burn marks and wear
  - maximum inward taper: 0.3 mm (0.001 in.)
- check lining and splines for wear, and check rivets for tightness

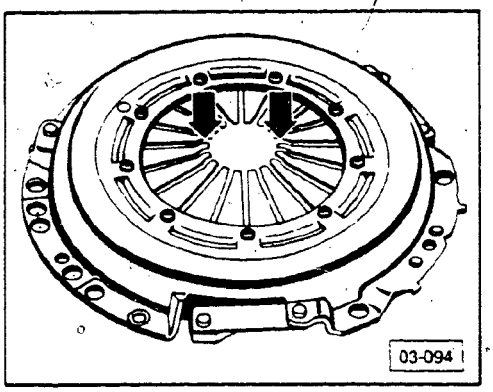

- checks ends of diaphragm spring (**arrows**)
  - maximum wear allowed: up to half of spring

> **CAUTION**
>
> Select replacement clutch pressure plate and disc using parts catalog along with engine code letters and engine numbers.

cardiagn.com

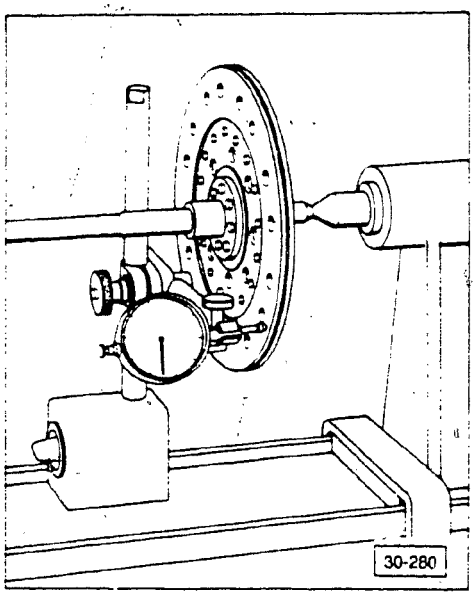

Clutch disc, checking runout

- maximum 0.5 mm (0.019 in.) measured 2.5 mm from outer edge

CAUTION

Select replacement clutch disc and pressure plate using parts catalog along with engine code letters and engine numbers.

cardiagn.com

Complaint	Possible cause	Corrective action
Clutch pedal does not return to original position (hydraulic clutch)	Air in hydraulic system, brake fluid level too low	Replenish brake fluid; bleed hydraulic system
	Piston seizes in master or slave cylinder	Replace defective part; bleed hydraulic system
	Hydraulic system, or master and slave cylinder leaking	
(mechanical clutch)	Clutch cable hard to operate	Replace clutch cable
	Self-adjusting mechanism (if equipped) defective	Replace clutch cable
(all vehicles)	Return spring (if equipped) defective	Replace return spring
	Clutch pedal hard to operate	Clean pivot points, lubricate. If necessary, replace bushing
	Linkage on transmission hard to operate	Clean pivot points, lubricate. Make necessary repairs
	Mechanical components in clutch housing binding or dragging	Clean pivot points, lubricate. Make necessary repairs
	Clutch release bearing twisted on guide sleeve, seized	Replace guide sleeve and clutch release bearing
	Diaphragm spring of pressure plate broken	Replace pressure plate
Excessively hard clutch pedal (mechanical clutch)	Clutch cable binds or drags. Cable corroded in guide. Self-adjusting mechanism defective (if equipped)	Replace clutch cable
	Linkage on transmission binding or dragging	Clean pivot points, lubricate. Replace bushing
(manual transmission — 020 only)	Pushrod and pressure plate bind or drag	Lubricate contact points lightly with **G 000 100** Lightly lubricate clutch pushrod
(all vehicles)	Clutch pedal binding or dragging **Note:** Prior to checking, disconnect master cylinder and/or clutch cable from clutch pedal	Clean pivot points, lubricate. If necessary, replace bushing
	Over-center spring action drags or binds. Over-center spring defective	Clean pivot points, lubricate. If necessary, replace over-center spring
	Return springs (if equipped) too strong/wrong return spring	Replace with correct return spring

cardiagn.com

Complaint	Possible cause	Corrective action
Excessively hard clutch pedal (all vehicles) — continued	Clutch release force increased due to wear of clutch linings	Inform customer: release force becomes higher with increasing wear Replace clutch disc if lining/rivet distance is below 0.1 mm
	Mechanical components in clutch housing bind or drag	Clean pivot points, lubricate. If necessary, replace pivot bushings
	Release bearing twisted on guide sleeve, seized	Replace defective parts
	Contact surface release bearing/release lever worn	Replace defective parts
	Pressure plate with wrong spring	Replace with correct part no.
	Clutch disc binds or drags on gears	Check gears of hub for defects (burrs). If necessary, replace clutch disc Clean corrosion and lubricant from gears of hub and input shaft. Lubricate input shaft splines with extremely light coating of grease, **G 000 100**. Move clutch disc back and forth; remove surplus grease

cardiagn.com

Complaint	Possible cause	Corrective action
Noises during clutch operation (mechanical clutch)	Transmission noises enter passenger compartment via clutch cable	Replace or add insulating components as necessary
	Clutch cable creaks, binds or drags	Replace clutch cable
	On full pedal application, diaphragm spring rubs against clutch disc (insufficient clutch free play)	Adjust clutch free play
	Self-adjusting mechanism (if equipped) defective	Replace clutch cable
	Release plate contact points and diaphragm spring need lubricating	Lightly grease contact points with **G 000 100**. Replace worn parts.
(manual transmission — 020 only)	Contact points, pushrod, release plate need lubricating	Lightly grease contact points with **G 000 100**
(all vehicles)	Clutch pedal binds or drags/ pivot points misaligned	Clean pivot points, lubricate. If necessary, replace bushing
	Pivot of over-center spring dry, dragging, misaligned	
	Return spring (if equipped) noisy	Lubricate pivot points
	Release bearing or release bearing guide defective, contact surface worn (shrunk?)	Generally, replace noisy release bearing. Replace damaged guide sleeves
	Contact surface (diaphragm spring tips) of pressure plate defective (bent, broken). Release bearing off-center in contact area	Replace pressure plate. Check release bearing and guide sleeve; replace if necessary. Check adaptor sleeves.
	Pilot bearing (if equipped) in crankshaft defective, engine/ transmission offset from center	Replace, lubricate with MoS_2 grease. Check adaptor sleeves
	Clutch disc installed improperly	Correct installation
	Wrong clutch disc installed	Replace with correct clutch disc

cardiagn.com

Complaint	Possible cause	Corrective action
Grinding noises when engaging a forward or the reverse gear, shift mechanism binds, drags; shifting not possible, clutch inoperative (hydraulic clutch)	Brake fluid level too low	Check system. Replenish brake fluid, bleed system
	Air in system; clutch does not disengage completely	
	Master/slave cylinder leaking, aged, line is too elastic	Replace defective part. Replenish brake fluid, bleed system
	Adjustment of clevis not correct	Correct adjustment
(mechanical clutch)	Mechanical components misaligned	Replace mechanical components
	Clutch free play excessive	Check clutch free play, adjust if necessary
	Wrong clutch cable installed (too long)	Replace with correct clutch cable
	Clutch cable defective; binds or drags	Replace clutch cable
	Self-adjusting mechanism (if equipped) defective	
(manual transmission — 020 only)	Pushrod too short due to wear	Replace pushrod, check release bearing. Lightly lubricate pushrod/release bearing contact points with **G 000 100** grease
(all vehicles)	Clutch pedal travel insufficient (carpet, floor mat beneath pedal). Clutch not being fully depressed	Inform customer
	Only reverse gear grinds when engaged	Inform customer. Depending on clutch diameter, wait approximately 3-6 seconds after depressing clutch before engaging reverse gear. Input shaft with clutch disc must first come to a stop
	Adjustment of shifting mechanism	Check, correct if necessary
	Bearing for shift lever and shift operation not lubricated; misaligned	Lubricate shift mechanism, replace defective parts

cardiagn.com

Complaint	Possible cause	Corrective action
Grinding noises when engaging a forward or the reverse gear, shift mechanism binds, drags; shifting not possible, clutch inoperative (all vehicles) — continued	Clutch disc binds or drags on gears. Hub corroded, or was damaged during installation. Hub misaligned on one side	Check gears of hub for damage, replace clutch disc if necessary. Remove corrosion and grease residue from hub and shaft. Grease input shaft splines with extremely light coating of **G 000 100**. Move clutch disc back and forth; remove surplus grease. When hub is misaligned, check position of adaptor sleeves. Check release bearing, guide sleeve, pressure plate and pilot bearing. Replace if necessary
	Pressure plate lift-off too slight (wrong pressure plate installed)	Replace with correct pressure plate
	Pilot bearing on crankshaft defective. Input shaft still driven when clutch disengaged	Replace pilot bearing and lubricate with MoS_2. Check adaptor sleeves. Replace if necessary. Check shaft
	Engine/transmission offset too large (adaptor sleeves missing), thus support plate of clutch disc bent	Install adaptor sleeves prior to transmission installation. Check clutch disc, pressure plate and pilot bearing (if equipped) for damage; replace if necessary
	Pilot bearing in crankshaft defective	
	Lining worn due to excessive rpms: down-shifting at too fast a speed	Replace clutch disc; inform customer
	Lining worn from riding the clutch when accelerating	
	Synchronizing system and/or shifting mechanism in transmission defective	Repair transmission

cardiagn.com

Complaint	Possible cause	Corrective action
Grinding noises when engaging a forward or the reverse gear, shift mechanism binds, drags; shifting not possible, clutch inoperative (all vehicles) — continued	Pressure plate uneven due to wrong installation. Clutch disc distorted due to improper handling	Check parts, replace if necessary. Observe position of locating pins If grinding occurs thereafter, check splines on clutch disc hub and shaft for ease of operation, check pilot bearing (if equipped) in crankshaft. If necessary, repair transmission
	2nd gear grinds only when cold	Inform customer. If necessary, replace transmission oil with oil of different viscosity (see specs/ procedures in this manual)
	Diaphragm spring tips broken or bent (installation error: release bearing runs off center)	Replace pressure plate. Check guide sleeve; replace if necessary. Check adaptor sleeves
	Clutch disc too thick	Replace with correct clutch disc
	Lining rusted onto flywheel (long periods of disuse, high relative humidity)	Lightly sand friction surfaces. Replace parts when corrosion is severe

cardiagn.com

Complaint	Possible cause	Corrective action
Clutch slips; little or no clutch action (hydraulic clutch)	Master/slave cylinder piston does not return to rest position.	Replace master/slave cylinder. Change brake fluid, bleed system.
(mechanical clutch)	Clutch cable improperly adjusted (insufficient clutch free play). Wrong clutch cable	Correct adjustment. Replace with correct cable, if necessary
	Self-adjusting mechanism (if equipped) defective	Replace clutch cable, if necessary
	Clutch cable binds or drags	Replace clutch cable, if necessary
(manual transmission — 020 only)	Clutch release pushrod oil seal in input shaft leaks	Replace oil seal, clutch disc. Clean pressure plate and flywheel
(all vehicles)	Wrong clutch disc, wrong pressure plate installed	Replace with correct clutch disc or pressure plate
	Clutch disc worn, burnt pressure plate, overheated grooves, pressure plate distorted due to wrong installation, pressing force of pressure plate too low. Driving errors, normal wear	Replace clutch disc, pressure plate. Instruct customer
	Mechanical components of transmission drag, pedal linkage binds	Clean pivot points, lubricate; repair if necessary
	Clutch disc, pressure plate, flywheel oil-contaminated. Crankshaft oil seal defective. Grease on contact surfaces from over-lubrication of hub	Replace clutch disc. Clean contact surfaces of pressure plate and flywheel. Replace crankshaft oil seal, remove surplus grease from input shaft
	Clutch disc installed from wrong side	Correct installation. Check clutch disc; replace if necessary
	Flywheel too thick; excessive wear on contact surfaces	Replace with correct flywheel. Check disc and pressure plate; replace if necessary

cardiagn.com

Complaint	Possible cause	Corrective action
Clutch pulls, power train rattles (hydraulic clutch)	Adjustment on clevis not correct	Correct adjustment
	Air in the system; master cylinder/slave cylinder defective	Replace defective part: Check brake fluid level, bleed system, check for leaks
(mechanical clutch)	Master cylinder/slave cylinder pushrod does not return to rest position	Replace defective part. Change brake fluid, if necessary. Bleed system
	Clutch cable binding	Replace clutch cable
	Clutch pedal binding **Note:** Prior to checking, disconnect clutch pedal from clutch cable.	Clean pivot points, lubricate if necessary. Replace bushing if necessary
	Linkage on transmission binds or drags	Clean pivot points, lubricate. Replace bushing if necessary
(all vehicles)	Engine runs unevenly	Check engine adjustment; correct if necessary
	Driving errors: acceleration rpm too low	Instruct customer
	Wrong clutch disc installed	Replace with correct clutch disc
Noises in idle (manual transmission — 020 only)	Clutch lining, contact surface of pressure plate and flywheel oil-contaminated (oil seeps out of clutch housing)	Check clutch release pushrod oil seal; replace if necessary. Replace clutch disc; clean pressure plate and flywheel
(all vehicles)	Torsion spring broken	Replace clutch disc
	Clutch disc installed without spring cage (rattling in idle)	Install clutch disc with spring cage
	Pressure plate distorted, broken, out-of-round	Replace pressure plate
	Engine runs unevenly	Check engine adjustment; correct if necessary

cardiagn.com

Complaint	Possible cause	Corrective action
Noises in idle (all vehicles) — continued	Engine mounts are too "soft"; misaligned	Check contact points. Replace if necessary, with correct engine mounts
	Shock absorbers defective	Replace shock absorbers
	Clutch lining, contact surface of pressure plate and flywheel oil-contaminated	Locate cause of contamination; repair as necessary. Replace clutch disc; clean pressure plate and flywheel
	Release bearing twisted on guide sleeve, seized (presses from one side on diaphragm spring of the pressure plate)	Replace release bearing and guide sleeve. Check mechanical components and pivot points
	Contact surface of pressure plate has lift on one side only, due to twisted release bearing	Check contact surface for clutch lining on flywheel pressure plate and diaphragm spring; if necessary replace pressure plate. Replace release bearing and guide sleeve.
	Housing of pressure plate warped during assembly. Contact surface of pressure plate has lift on one side only	
	Input shaft greased excessively (traces of grease on clutch disc, pressure plate and flywheel)	Clean grease from pressure plate and flywheel. Replace if damaged (i.e., scoring, signs of overheating, grooves). Remove all lubricant from hub and input shaft, lubricate input shaft lightly with **G 000 100**. Move clutch disc back and forth; remove excess grease.

cardiagn.com

Index

5-speed 012

Drive flange
- circlip 34.19
- removing 34.19
- seal 34.19

Final drive housing
- assembly 34.14

Gearshift
- assembly 34.5

Main shaft
- assembly 34.23
- ball bearing 34.17

Multi-function sender
- installing 34.18

Oil collector
- removing/installing 34.26

Relay shaft
- bolts 34.25
- installing 34.25

Selector shaft bushing
- removing 34.26

Shift fork
- bearing 34.26
- bracket 34.26

Shift linkage
- adjusting/checking 34.6

Shift mechanism
- installed position 34.25

Shift rod bushing, 3rd/4th gear
- removing/installing 34.18

Shift rod, inner
- installed with relay shaft 34.25
- sealing ring 34.26

Speedometer drive
- replacing 34.20

Tapered roller bearing outer race
- in final drive cover 34.20
- in final drive housing 34.21

Technical data
- chart 34.2

Transmission
- assembly 34.7
- breather sleeve 34.18
- disassembling/assembling 34.16
- mounting to engine 34.10
- mounting in stand 34.17
- removing/installing 34.8
- tightening torques 34.9

5th/reverse gear lock
- assembling/checking 34.22

cardiagn.com

Technical data, 5-speed transmission 012

Note

For location of transmission codes, see Group 00.

Code		AKL	AUF/AXD	ALP
Production	from	09/87	08/89	09/87
	to	7/89		
Application	type	Audi 80		Audi 90
	engine	4-cylinder 2.0 liter - 83kW		5-cylinder 2.3 liter - 100kW
Ratio	final drive	37:9 = 4.111		37:10 = 3.700
	1st gear	39:11 = 3.545		39:11 = 3.545
	2nd gear	40:10 = 2.105		40:19 = 2.105
	3rd gear	39:30 = 1.300		39:30 = 1.300
	4th gear	33:35 = 0.943		35:34 = 1.029
	5th gear	30:38 = 0.789		31:37 = 0.838
	reverse gear	35:10 = 3.500		35:10 = 3.500
	speedometer	electric		
Lubricant capacity		2.35 liter (2.5 qt)		
Specification		Transmission oil G 50 (synthetic oil) SAE 75 W 90		
Clutch actuation		hydraulic		
Clutch disc diameter		210 mm		228 mm
Drive shaft-flange diameter		100 mm		108 mm
Speed in highest gear at 1000 RPM		34 km/h (54.7 mph)		36 km/h (58 mph)

cardiagn.com

This page intentionally left blank

cardiagn.com

This page intentionally left blank

cardiagn.com

Note

Do not lubricate shift linkage.

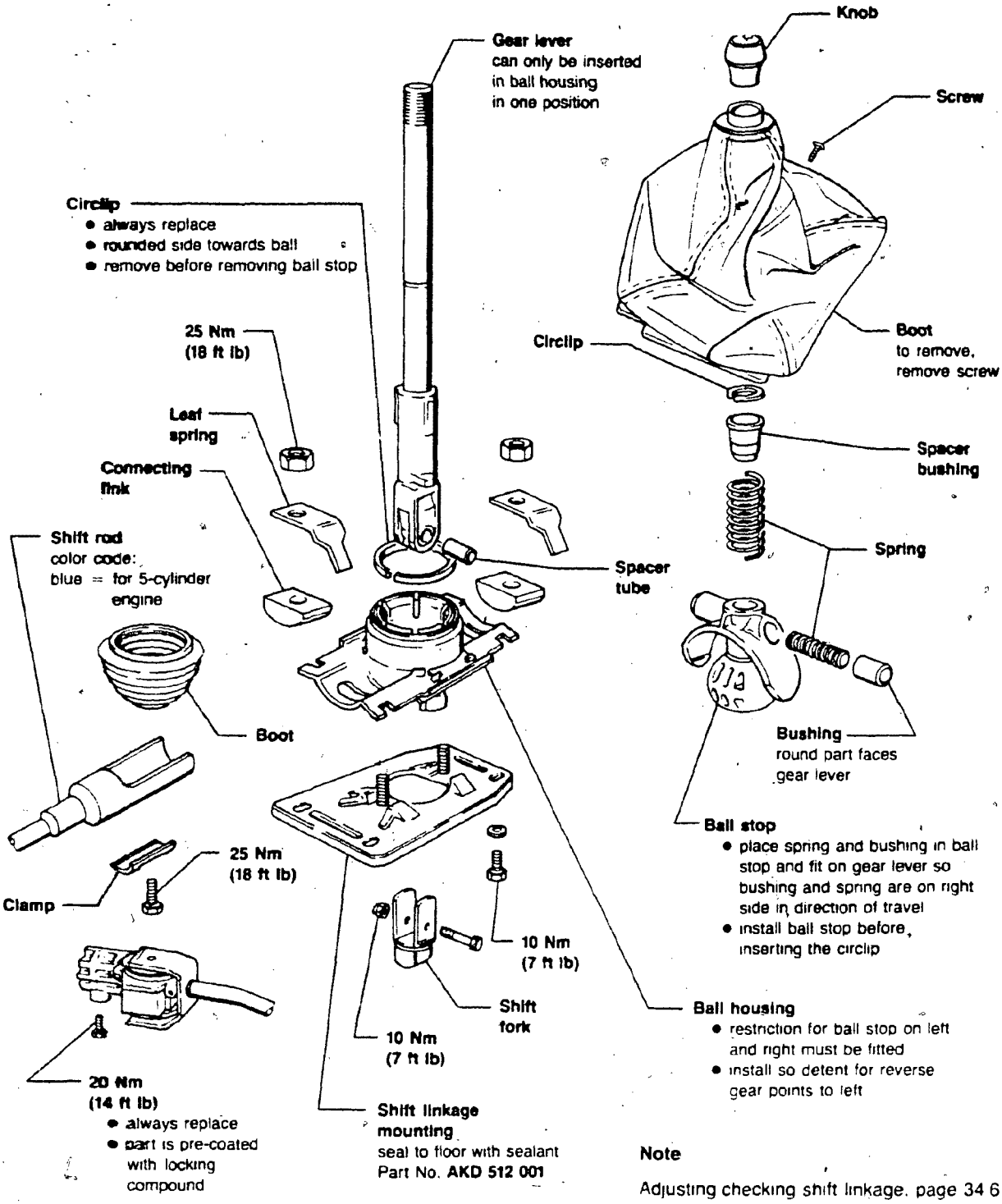

Note

Adjusting checking shift linkage, page 34 6

cardiagn.com

Shift linkage, adjusting/checking

Adjusting

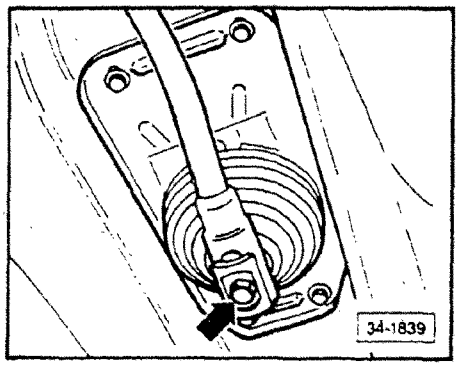

- place gearshift lever in neutral
- remove shift knob, screw for boot, and boot
- loosen bolt (**arrow**)
- position gearshift lever as close to vertical as possible

Checking

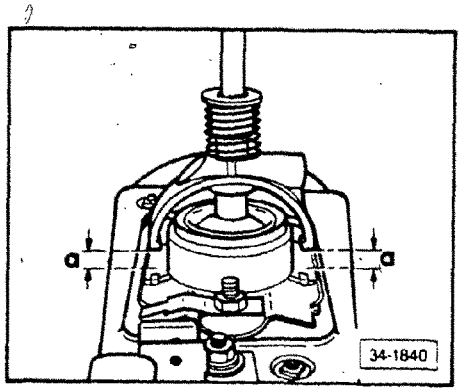

- align lever so that both lugs on ball stop are same distance **a** (**arrows**) from ball housing
- tighten bolt and ensure that lever does not move
- check function of shifter; shift through all gears
  - lever must be in the 3rd/4th gear plane in neutral
  - ensure that reverse safety catch is effective. If not, loosen screws and turn ball housing slightly
- install boot and shift knob

cardiagn.com

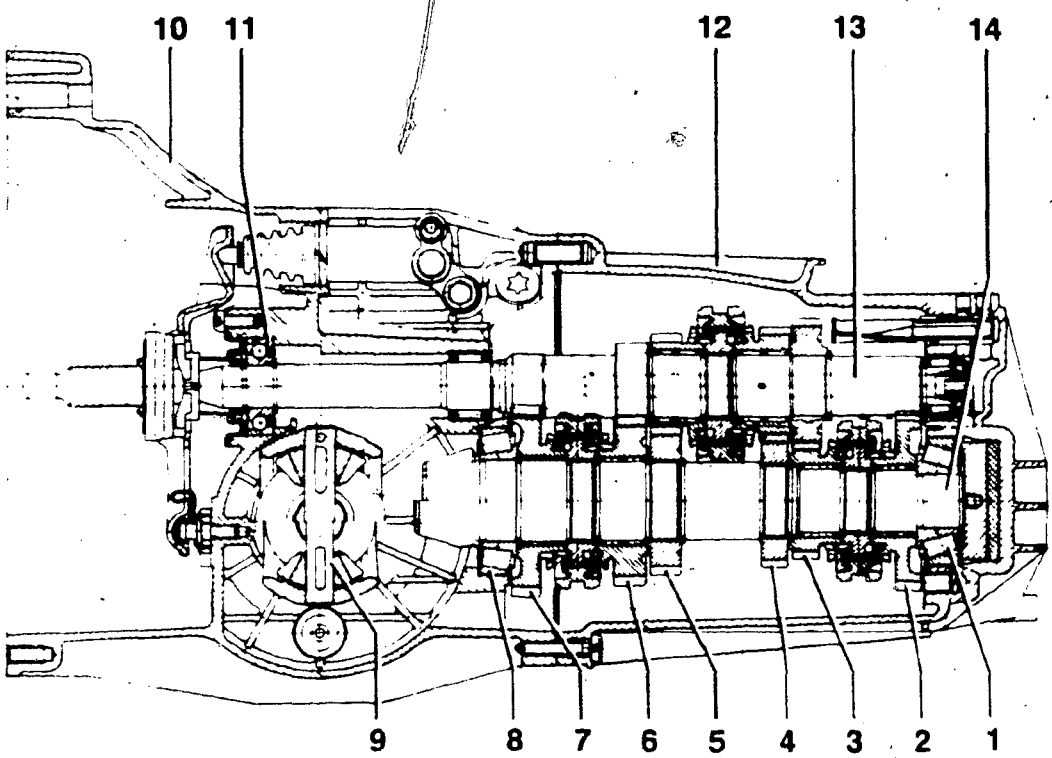

1 — **Tapered roller bearing**
adjusting, see Repair Group 39

2 — **Reverse gear**

3 — **5th gear**

4 — **4th gear**

5 — **3rd gear**

6 — **2nd gear**

7 — **1st gear**

8 — **Tapered roller bearing**
adjusting, see Repair Group 39

9 — **Differential**
- disassembling/assembling, see Repair Group 39
- adjusting, see Repair Group 39, Adjustment Overview

10 — **Final drive housing**
assembly, page 34.14

11 — **Ball bearing**
adjusting, see Repair Group 35

12 — **Gear carrier housing**
assembly, page 34.23

13 — **Main shaft**
- disassembling assembling, see Repair Group 35
- adjusting, see Repair Group 35

14 — **Pinion shaft**
- disassembling assembling, see Repair Group 35
- adjusting, see Repair Group 39

cardiagn.com

Transmission, removing/installing

Removing

- disconnect battery ground strap
- remove 3 upper engine/transmission bolts
- remove transmission ground strap from transmission

- remove connector for speedometer sender and connector for multi-function sender by pressing clips in
- disconnect catalytic converter connector
- remove transmission assembly protection plate
- remove exhaust manifold bolts
- remove front exhaust pipe
- remove following parts:
  - rear cross member
  - automatic seat belt tensioning cables at transmission
  - shift rod
  - bell housing cover plate
  - drive shaft protection plate

- disconnect axle shafts at transmission
- turn steering to right lock and support axle shafts by tying up to body

- remove clutch slave cylinder
- remove steering bracket
- support engine with **10-222A**

- support transmission with **V.A.G. 1383**
- remove transmission strut at left rear
- remove front engine mount

- remove lower engine/transmission bolts
- slowly lower transmission out of vehicle

cardiagn.com

Installing

Proceed in reverse order of removal and note the following:

- be sure that centering (dowel) sleeves are installed in cylinder block, in positions shown on page 34.10
- press clutch slave cylinder in with lever until bolt can be installed easily

Note

A replacement bolt for mounting the clutch slave cylinder is available with a pointed tip for easier installation.

Tightening torques

Transmission to engine	
M 8 bolts	25 Nm (18 ft lb)
M 10 bolts	45 Nm (33 ft lb)
M 12 bolts	65 Nm (48 ft lb)
Drive shaft to flange	
M 8 bolts	45 Nm (33 ft lb)
M 10 bolts	80 Nm (59 ft lb)

cardiagn.com

Mounting transmission to engine

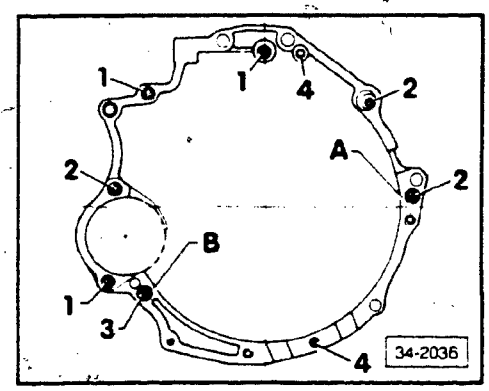

4-cylinder engine

1 = Bolt M 12 x 70
2 = Bolt M 12 x 85
3 = Bolt M 12 x 100
4 = Bolt M 8 x 15

Centering (dowel) sleeves:
positions **A** and **B**

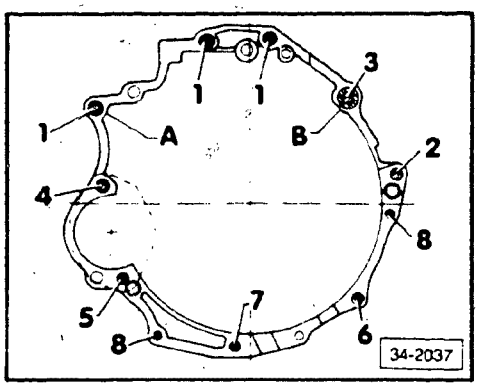

5-cylinder engine

1 = Bolt M 12 x 70
2 = Bolt M 12 x 80
3 = Bolt M 12 x 90
4 = Bolt M 12 x 100
5 = Bolt M 10 x 120
6 = Bolt M 10 x 50
7 = Bolt M 10 x 40
8 = Bolt M 8 x 40

Centering (dowel) sleeves:
positions **A** and **B**

cardiagn.com

This page intentionally left blank

cardiagn.com

This page intentionally left blank

cardiagn.com

This page intentionally left blank

cardiagn.com

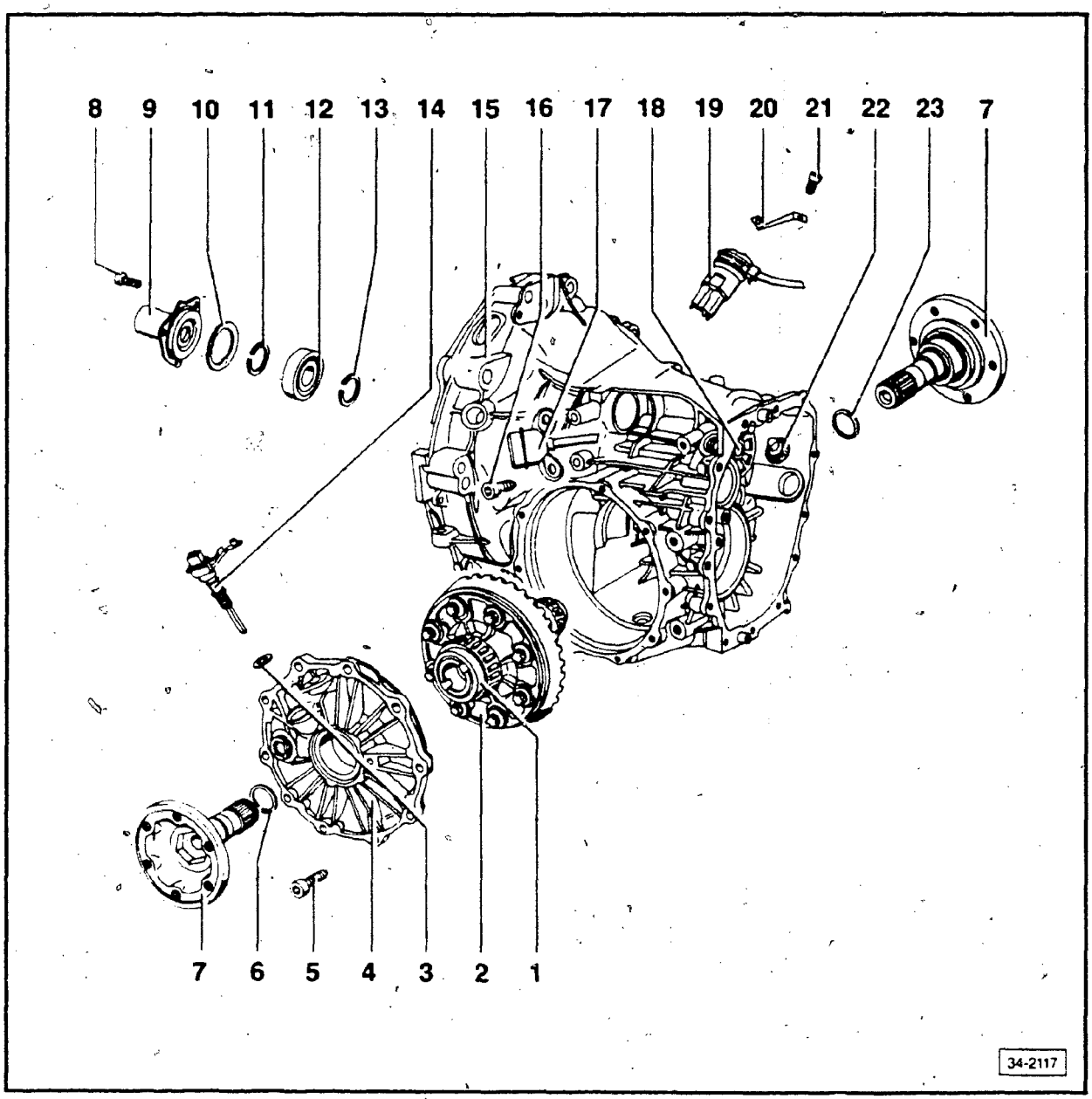

CAUTION

If final drive housing or tapered roller bearing for pinion or hollow shaft is to be replaced and the deviation r is not specified on the bevel gear, the position of the pinion must be determined before removal of the gear carrier housing (actual measurement). See Repair Group 39.

Note

Before installing gear carrier housing, make sure that the guide sleeves are mounted in transmission housing.

Handle speedometer sender carefully. Do not let it fall, otherwise speedometer data may not be exact.

cardiagn.com

1 — **Speedometer drive**
can be replaced with transmission installed

2 — **Differential**
- can be removed with gear carrier housing installed
- disassembling/assembling, see Repair Group 39

3 — **Sealing ring**

4 — **Final drive cover**
- tapered roller bearing outer race, removing/installing, Figs. 11 and 12
- extract sealing ring with **VW 681**; installing, Fig. 9
- seal with **AMV 188 200 03**

5 — **Torx bolt — 25 Nm (18 ft lb)**

6 — **Circlip**
- always replace
- removing/installing, Fig. 8

7 — **Drive flange**
- removing, Fig. 7
- drive in with **VW 295**

8 — **Torx bolt — 35 Nm (26 ft lb)**
always replace

9 — **Guide sleeve with sealing ring**
sealing ring removing/installing, see Repair Group 30

10 — **Concave washer**
small diameter faces guide sleeve (convex side)

11 — **Circlip**
- mark after removal
- measuring, see Repair Group 35

12 — **Main shaft ball bearing**
- removing from final drive housing, Fig. 2
- installing, Fig. 3

13 — **Circlip**
- mark after removal
- measuring, see Repair Group 35

14 — **Speedometer sender**

15 — **Final drive housing**
- transmission — clamping in assembly stand, Fig. 1
- sealing ring for drive flange — remove with **VW 681**; drive in (5 mm under final drive housing surface) with **VW 195**
- breather insertion depth, Fig. 5
- tapered roller bearing outer race — removing, Fig. 13; drive in with **VW 511** and **VW 295**
- 3rd/4th gear shift rod bushing — removing, Fig. 6; drive in with **VW 295** and **VW 295A**
- pinion shaft needle bearing, removing/installing, see Repair Group 35
- seal with **AMV 188 200 03**

16 — **Torx bolt — 10 Nm (7 ft lb)**

17 — **Multi-function sender connector**

18 — **Gear shift lever shaft cover**
tighten retaining bolts to **20 Nm (15 ft lb)**

19 — **Multi-function sender**
installing, Fig. 4

20 — **Locking plate**
for multi-function sender

21 — **25 Nm (18 ft lb)**

22 — **5th/reverse gear lock**
- can be replaced with transmission installed
- beveled side of plastic bushing faces relay shaft bore
- tightening torque for retaining bolts: **10 Nm (7 ft lb)**
- installation position, page 34.22
- disassembling/assembling, page 34.22

23 — **Circlip**
- always replace
- removing/installing, Fig. 8

cardiagn.com

Transmission, disassembling/ assembling

Disassembling

- clamp transmission in assembly stand, Fig. 1
- drain transmission oil
- remove clutch return lever and clutch release bearing
- remove guide sleeve
- remove and measure thickness of circlip in front of ball bearing
- extract ball bearing from final drive using puller, Fig. 2
- remove and measure thickness of circlip behind ball bearing
- remove final drive housing/gear carrier housing bolts. Remove gear carrier housing
- remove multi-function sender
- remove relay shaft bolts, page 34.25
- remove locking segment bolt and locking segment
  - installed position, page 34.25
- remove main shaft, pinion, relay shaft, selector rods and shift forks together

Assembly

Assemble in reverse order of removal.

Note

Main shaft, pinion with hollow shaft, relay shaft, selector rods and shift forks must be installed together, page 34.25.

Circlips for main shaft at ball bearing must be replaced in the same position and be of the same thickness.

cardiagn.com

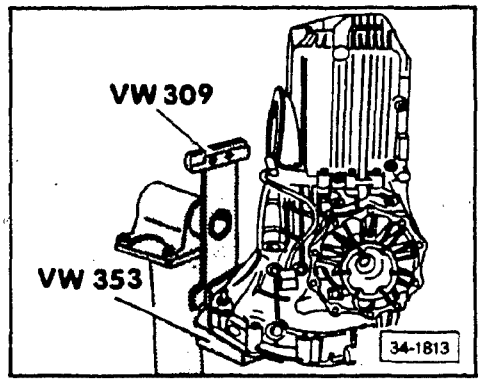

▶ **Fig. 1 Transmission, mounting in assembly stand**

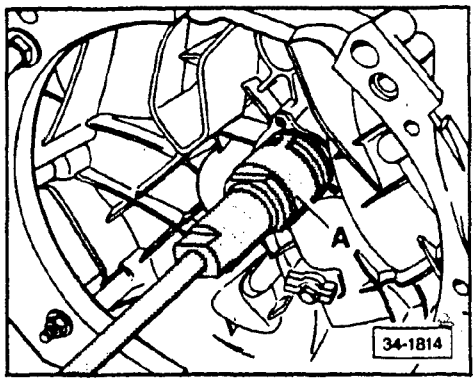

▶ **Fig. 2 Ball bearing, removing from housing**

- **A** — puller **VAG 1582** and gripper **VAG 1582/2**

Note

When installing puller do not damage the ball bearing cage.

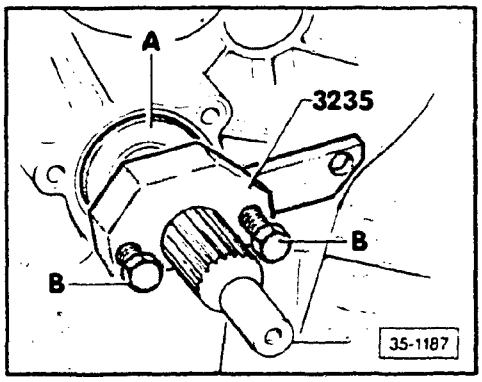

▶ **Fig. 3 Ball bearing, installing in housing**

- install circlip on main shaft
- install ball bearing on main shaft, up to stop
- position thrust pad **A** of press tool **3235**, onto ball bearing
- mount press tool **3235** behind clutch plate splines on input shaft
- apply pressure to bearing with two bolts **B** positioned in the thrust pad **A** recesses
- press bearing in, onto the stop, by tightening the two bolts alternately and evenly

CAUTION

Bolts **B** must be tightened in stages (i.e. 1/2 turn at a time) or ball bearing could tilt and become damaged.

Note

Installation position of ball bearing:

Open side of plastic cage points towards guide sleeve.

cardiagn.com

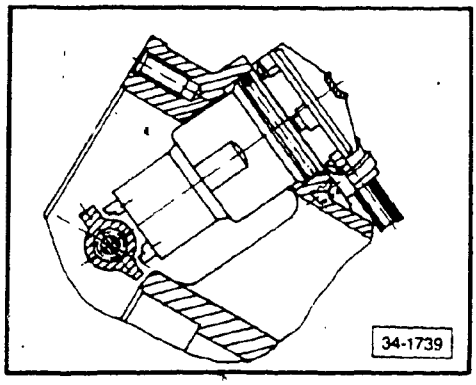

Fig. 4 Multi-function sender, installing

- install lock ring to seal multi-function sender

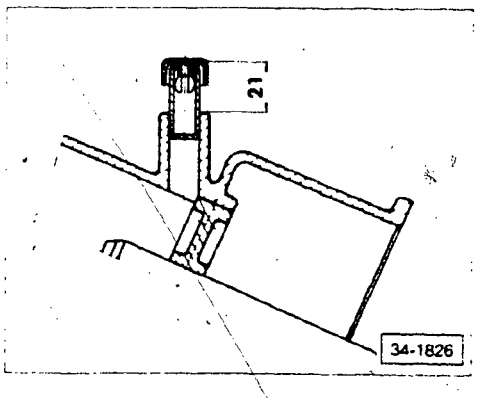

Fig. 5 Transmission breather sleeve, installing

- install, so that sleeve extends 21 mm above vent lip

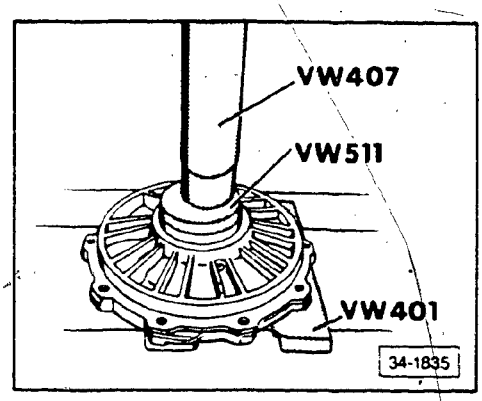

Fig. 6 Bushing for 3rd/4th gear shift rod, removing/installing

- extract bushing with slide hammer **VW 771** and an 18.5 mm - 23.5 mm puller, **A** (i.e. **US 1088** or **Kukko 21/3**)
- install with drift set **VW 295** and **VW 295A**
  - apply sealant **AMV 188 200**

cardiagn.com

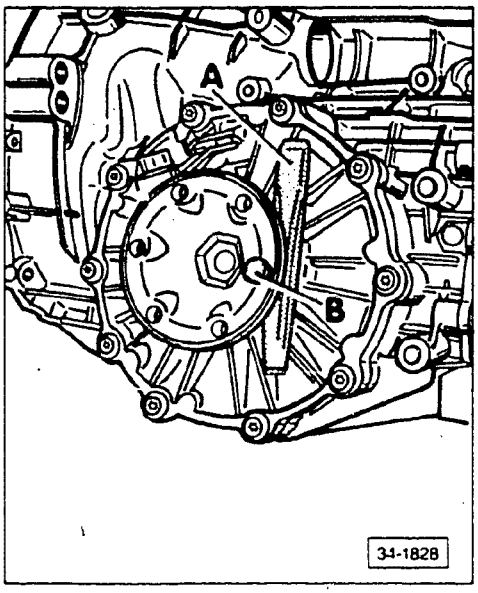

Fig. 7 Drive flange, removing

- position chisel or spacer **A** under drive flange and extract drive flange from differential gear by turning bolt **B**

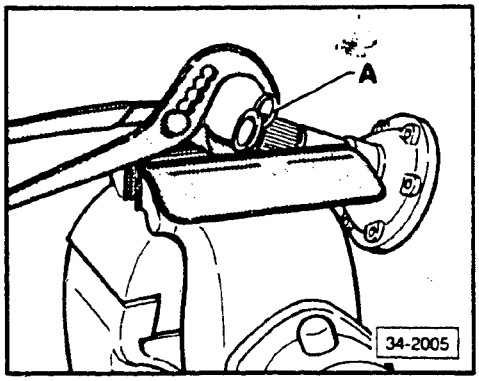

Fig. 8 Drive flange circlip, replacing

- clamp drive flange in vise with protective jaw covers
- press circlip out of drive flange groove with new circlip **A**

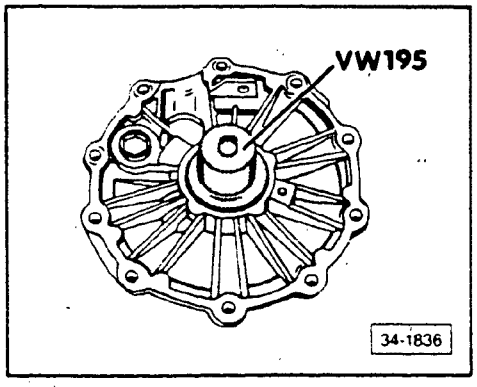

Fig. 9 Drive flange sealing ring, installing

- drive sealing ring in 5 mm under upper edge of final drive cover with **VW 195**

cardiagn.com

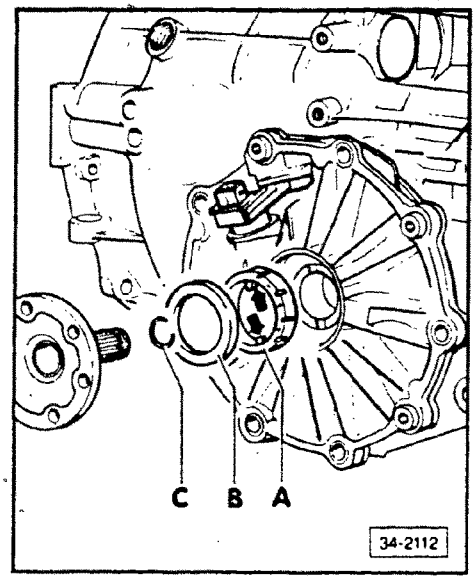

▶ **Fig. 10 Speedometer drive, replacing**

- remove left axle shaft from left drive flange
- remove drive flange
- remove sealing ring **B**
- remove speedometer drive **A**
  - pry alternately, at drive pins (**arrows**), with screwdriver
- position replacement speedometer drive
  - drive pins (**arrows**) point toward sealing ring **B**, and engage in grooves of differential gear housing
  - always replace sealing ring **B** and circlip **C**
- add transmission oil, to specifications

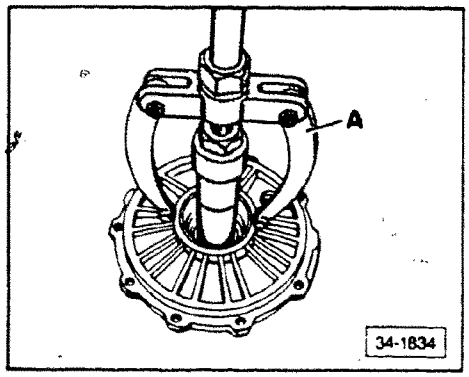

▶ **Fig. 11 Tapered roller bearing outer race, removing from final drive cover**

- remove using **A**, 46 mm - 56 mm puller (e.g. **US 1037** or **Kukko 21/7**) with holder (e.g. **US 1039** or **Kukko 22/2**)

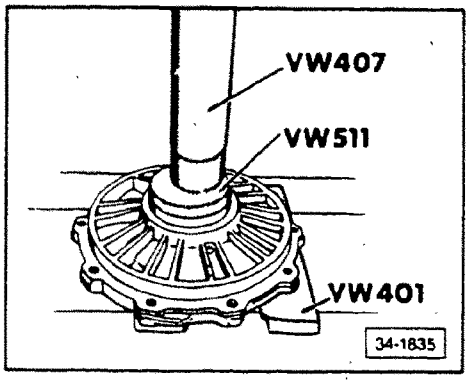

▶ **Fig. 12 Tapered roller bearing outer race, installing in final drive cover**

cardiagn.com

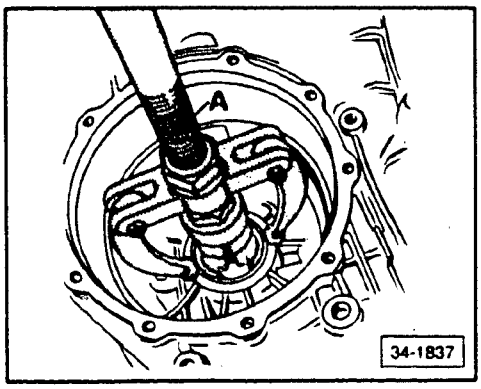

▶ **Fig. 13 Tapered roller bearing outer race (in final drive housing), removing/installing**

- remove using **A**, 46 mm - 56 mm puller (e.g. **US 1037** or **Kukko 21/7**) with holder (e.g. **US 1039** or **Kukko 22/2**)

Note

Install using **VW 295** and **VW 295A**.

cardiagn.com

CONTINUED IN THE

BEGINNING OF NEXT ROW

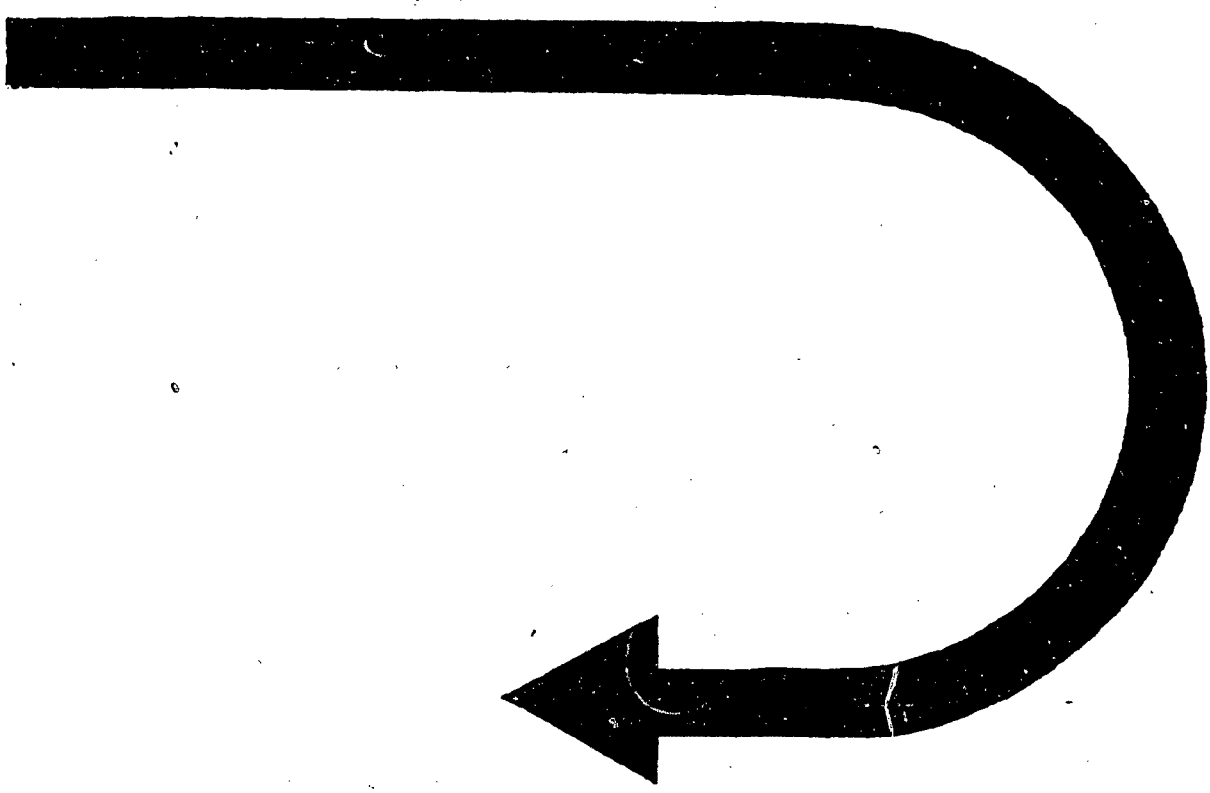

cardiagn.com

Lock for 5th/reverse gear, assembling/checking

Note

If there is any catching or hanging up in 5th or reverse gear after adjusting the shifting control, the 5th and reverse gear lock must first be removed, checked, and if necessary replaced, before removal and disassembly of the transmission.

Assembling

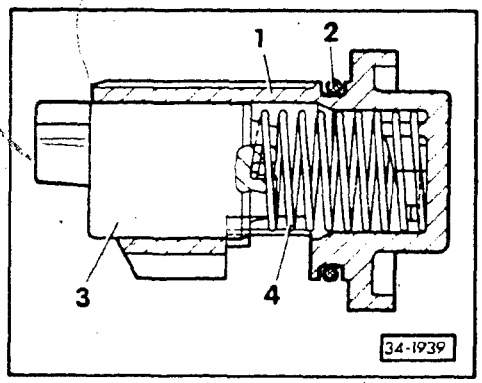

- **1** — plastic bushing
- **2** — lock ring
- **3** — bushing with lock for 5th and R gear
- **4** — spring

- place spring **4** in plastic bushing **1**
- turn spring counterclockwise under light pressure until spring snaps in place in base of plastic part
- place bushing **3** on spring so that bent end of spring lies in groove
- press spring together using bushing **3**
  - approximately one turn counterclockwise (turn to left), until bushing **3** tab lies over the groove in plastic bushing
- press bushing **3** tab into groove in plastic bushing **1** to stop surface
- turn bushing **3** in clockwise direction (to the right) and release
  - bushing **3** springs into assembly end position

5th/reverse gear lock, checking installation position

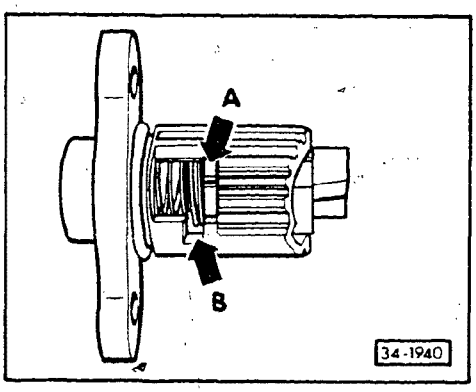

- 5th/reverse gear bushing tab (**arrow A**) must always come to stop opposite groove (**arrow B**) on plastic bushing

cardiagn.com

THIS FRAME INTENTIONALLY LEFT

BLANK

cardiagn.com

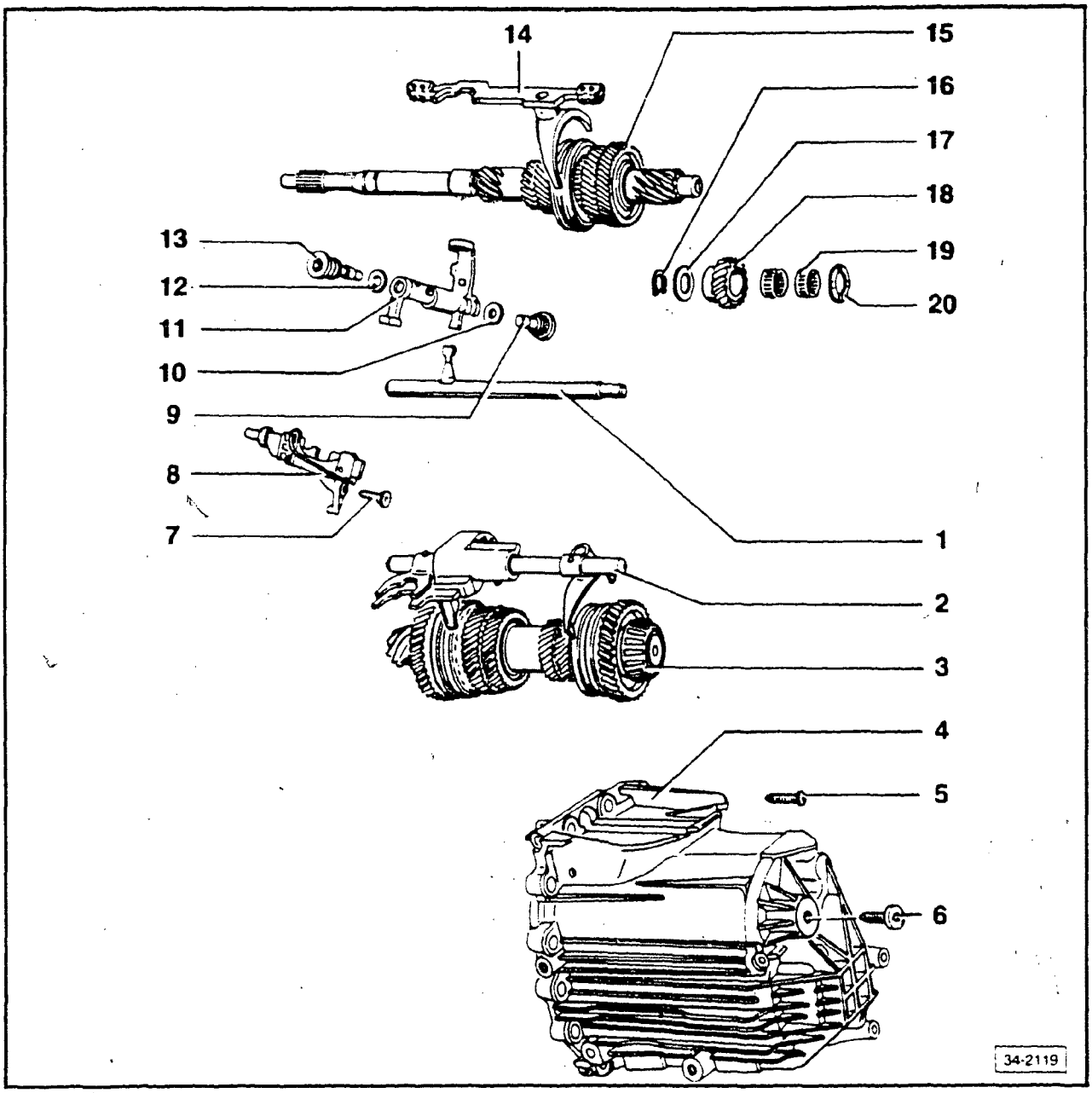

CAUTION

If final drive housing or tapered roller bearing for pinion or hollow shaft is to be replaced and the deviation **r** is not specified on the bevel gear, the position of the pinion must be determined before removal of the gear carrier housing (actual measurement), see Repair Group 39.

1 — Inner shift rod

- installed position, Fig. 2
- installing, Figs. 3 and 4
- pull out inner shift rod sealing ring with **VW 681**, and drive in flush with **VW 460/2**. On installed transmission, carefully pry out sealing ring with screwdriver and drive in with **VW 423**. Remove exhaust system and trans shift rod first, for clearance. Installed position of sealing ring, Fig. 8.

cardiagn.com

2 — **1st, 2nd, 5th and reverse gear selector shaft with shift fork**
- installed position, Fig. 2
- installing, Fig. 3
- to disassemble/assemble, remove install spring pins
- 1st/2nd gear shift fork bearing, removing, installing, Fig. 6
- 1st/2nd gear shift forks can be replaced individually
- replace 5th/reverse gear shift fork only together with selector ring and selector shaft

3 — **Pinion with hollow shaft**
disassembly/assembly, see Group 35

4 — **Gear carrier housing**
oil collector, removing/installing, Fig. 7

5 — **Torx bolt — 25 Nm (18 ft lb)**

6 — **Torx bolt for reverse gear axle — 35 Nm (26 ft lb)**
reverse gear axle does not need to be removed for removal of reverse gear

7 — **Torx bolt — 25 Nm (18 ft lb)**
shoulder faces safety mechanism for spring locking segment

8 — **Locking segment**
- installed position, Fig. 2
- install after installation of relay shaft (item 11) and inner shift rod (item 1)

9 — **Torx bolt — 40 Nm (30 ft lb)**
removing, Fig. 1

10 — **Spacer**

11 — **Relay shaft**
- installed position, Fig. 2
- installing, Figs. 3 and 4

12 — **Spacer**

13 — **Torx bolt — 40 Nm (30 ft lb)**
removing, Fig. 1

14 — **3rd/4th gear selector shaft and shift fork**
- installed position of selector shaft, Fig. 2
- installing, Fig. 3
- selector shaft or shift fork can be replaced individually
- selector shaft bushing, removing, Fig. 5
- driving in with **VW 295** and **VW 295A**
- replace selector shaft bearing, if worn

15 — **Main shaft**
- disassembling assembling, see Group 35
- adjusting, see Group 35
- installing, Fig. 3

16 — **Circlip**

17 — **Washer**

18 — **Reverse gear**

19 — **Reverse gear needle bearing**

20 — **Thrust washer**

cardiagn.com

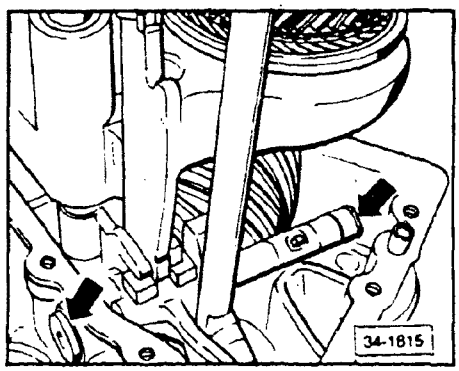

▶ **Fig. 1 Relay shaft bolts (arrows), removing**

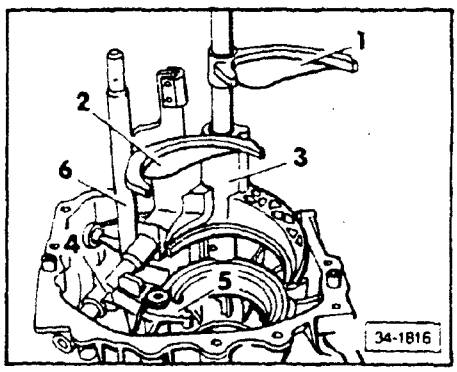

▶ **Fig. 2 Shift mechanism, installation position**

1 — 5th reverse gear selector shaft with swinging fork
2 — 3rd/4th gear selector shaft
3 — 1st 2nd gear shift fork
4 — relay shaft
5 — locking segment
6 — inner shift rod

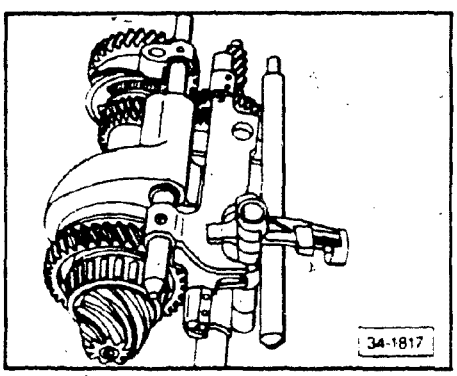

▶ **Fig. 3 Main shaft, pinion with hollow shaft, selector shafts and shift forks, installation position**

- these parts must be installed together

Note

The relay shaft and inner shift rod can also be installed afterward (see Fig. 4).

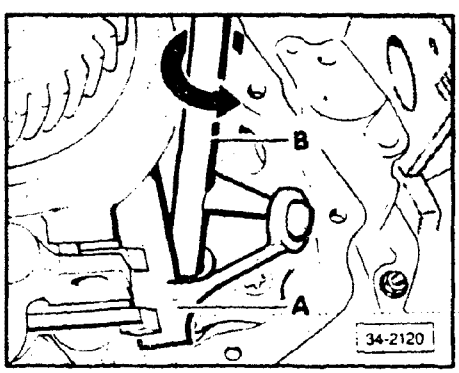

▶ **Fig. 4 Relay shaft with inner shift rod, installing**

- engage 3rd gear
- install relay shaft **A**
- place inner shift rod **B** sideways on bracket opening in final drive housing and align with bracket eye in relay shaft
- rotate shift rod in (follow direction of **arrow**)

cardiagn.com

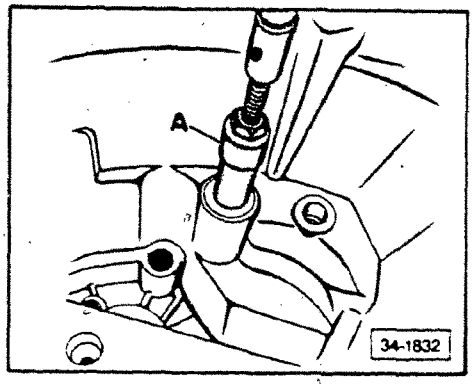

▶ **Fig. 5 Selector shaft bushing, removing**

- use slide hammer **VW 771**, and 18.5 mm - 23.5 mm inner puller **A** (e.g. **US 1088** or **Kukko 21/3**)

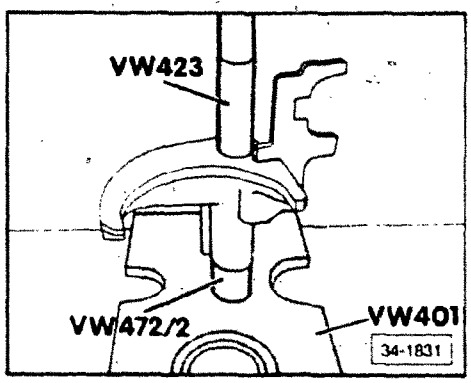

▶ **Fig. 6 Shift fork bearing, removing/installing**

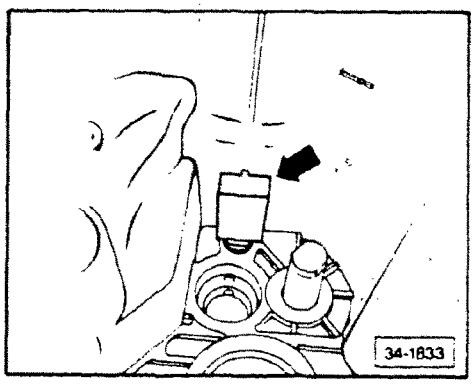

▶ **Fig. 7 Oil collector, removing/installing**

- pry out oil collector (**arrow**) with screwdriver
- push oil collector far enough into gear carrier housing that oil collector locking tab snaps into gear carrier housing
  - collector cup points upwards in gear carrier housing

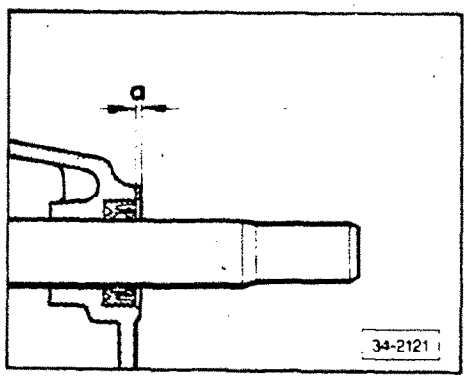

▶ **Fig. 8 Inner shift rod sealing ring, installing**

- dimension **a** = 1 mm

cardiagn.com

Index

5-speed 012

Gear spring
- installing 35.5, 35.14

Main shaft
- adjusting 35.9
- assembly 35.2
- bearings 35.4, 35.6, 35.10
- circlips 35.7

Pinion bearings
- inner race 35.13, 35.17
- outer race 35.13, 35.18

Pinion shaft
- assembly 35.11
- circlips 35.19

Plastic sleeve
- installing 35.8

Synchronizer hub
- removing 35.16

Synchronizer ring
- checking 35.5, 35.14
- identifying 35.17

1st/2nd gear
- operating sleeve 35.15

3rd gear
- removing/installing 35.15

3rd/4th gear
- operating sleeve 35.5
- synchronizer hub 35.8

4th gear
- circlip 35.6
- removing/installing 35.16

5th gear
- installing 35.6
- removing 35.5

5th/reverse gear
- operating sleeve 35.18

cardiagn.com

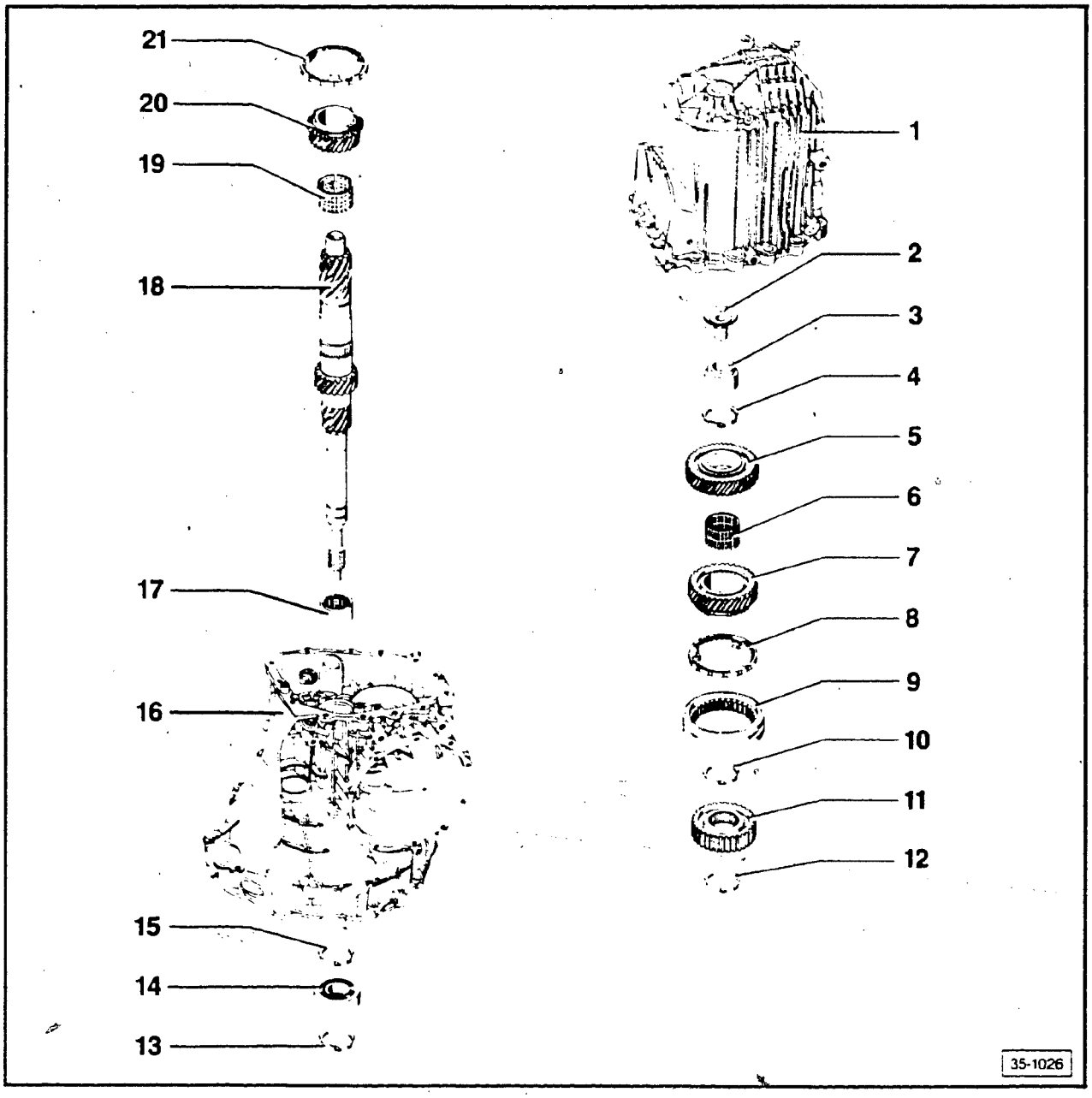

Note

When installing new gears or main shaft, refer also to Repair Group 00 for identifications and Repair Group 34 for technical data.
Circlips are different in thickness and diameter and should be measured as they are removed. If a gear or shaft is replaced, the corresponding circlip must be measured for correct fit.

1 — Gear carrier housing

2 — Plastic sleeve
- always replace
- not used on main shafts which lack oil holes for 3rd/4th gear

3 — Needle bearing — main shaft
- is damaged during removal
- always replace
- removing, Fig. 9
- drive in with **VW 416B** to a depth of 214 mm (8.43 in.), measured from housing face

4 — Circlip
- redetermine thickness when relacing 5th gear
- locating/selecting, Fig. 11 (no. 5)
- installing, Fig. 10

5 — 5th gear
- removing, Fig. 7
- installing, Fig. 8

cardiagn.com

6 — **Needle bearing — 4th gear**

7 — **4th gear**
spring, assembling, Fig. 4

8 — **Synchronizer ring — 4th gear**
checking for wear, Fig. 5

9 — **Operating sleeve — 3rd/4th gear**
installed position, Fig. 6

10 — **Circlip**
- redetermine thickness when replacing the synchronizer hub
- locating/selecting, Fig. 11 (no. 4)
- installing, Fig. 10

11 — **Synchronizer hub — 3rd/4th gear**
- high collar faces 3rd gear
- pressing off, Fig. 12
- pressing on, Fig. 13

12 — **Circlip**
locating/selecting, Fig. 11 (no. 3)

13 — **Circlip**
- locating, Fig. 11 (no. 1)
- determining thickness, page 35.9
- if ball bearing and shaft are to be used again, circlip thickness must be checked, and circlip replaced with new one of same thickness

14 — **Ball bearing — main shaft**
- removing/installing, Repair Group 34
- pressing on, after main shaft is installed, Fig. 3

15 — **Circlip**
- locating, Fig. 11 (no. 2)
- determining thickness, page 35.9
- if ball bearing and shaft are to be used again, circlip thickness must be checked and circlip replaced with new one of same thickness

16 — **Final drive housing**

17 — **Needle bearing — main shaft**
- removing, Fig. 1
- press in with **40-202**
- installed depth, Fig. 2

18 — **Main shaft**
adjusting, page 35.9

19 — **Needle bearing — 3rd gear**

20 — **3rd gear**
spring, assembling, Fig. 4

21 — **Synchronizer ring — 3rd gear**
checking for wear, Fig. 5

cardiagn.com

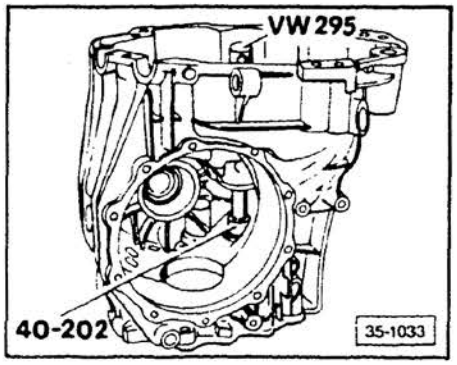

▶ **Fig. 1 Main shaft needle bearing, removing**

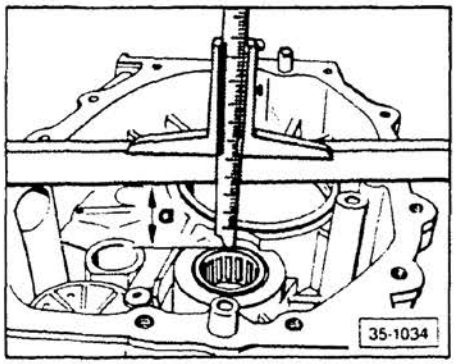

▶ **Fig. 2 Needle bearing, installed depth**

- measure from lower edge of straightedge to upper edge of bearing
  - dimension **a** = 39.5 mm (1.56 in.)

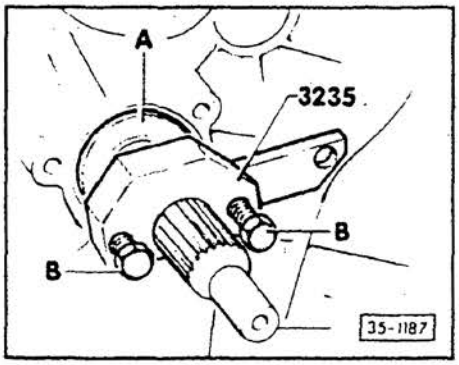

▶ **Fig. 3 Ball bearing, installing in housing**

install circlip on main shaft

- install ball bearing on main shaft, up to stop
- position thrust pad **A** of press tool **3235**, onto ball bearing
- mount press tool **3235** behind clutch plate splines on input shaft
- apply pressure to bearing with two bolts **B** positioned in the thrust pad **A** recesses
- press bearing in, onto the stop, by tightening the two bolts alternately and evenly

CAUTION

Bolts **B** must be tightened in stages (i.e. 1/2 turn at a time) or ball bearing could tilt and become damaged.

Note

Installation position of ball bearing:
open side of plastic cage faces guide sleeve.

cardiagn.com

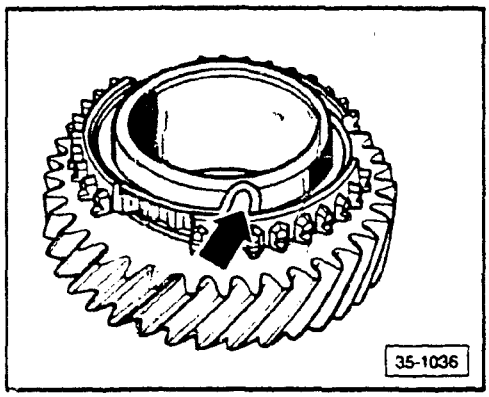

▶ **Fig. 4 Spring, installing in gear**

- assemble spring (**arrow**) in gear by installing angled end of spring in bore

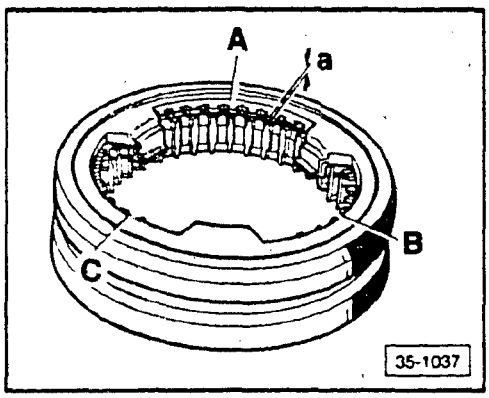

▶ **Fig. 5 Synchronizer ring, checking for wear**

- press synchronizer ring into operating sleeve and measure gap **a** with a feeler gage in positions **A**, **B**, and **C**
- add measured values and divide by 3
  - value obtained must not be less than 0.5 mm

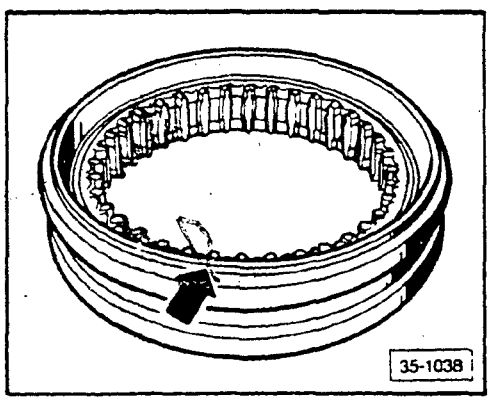

▶ **Fig. 6 Operating sleeve — 3rd/4th gear, installing**

- recessed side (**arrow**) faces 3rd gear

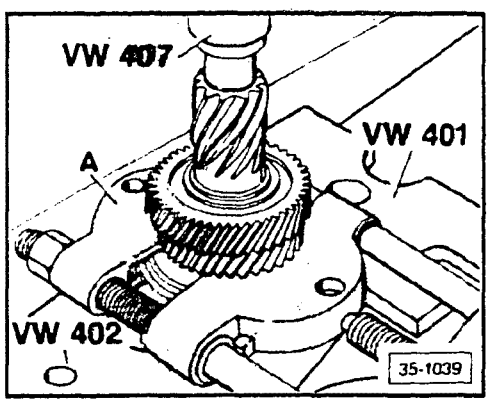

▶ **Fig. 7 5th gear, removing**

- **A** = 22 mm-115 mm separating device such as **Kukko 17/2**

cardiagn.com

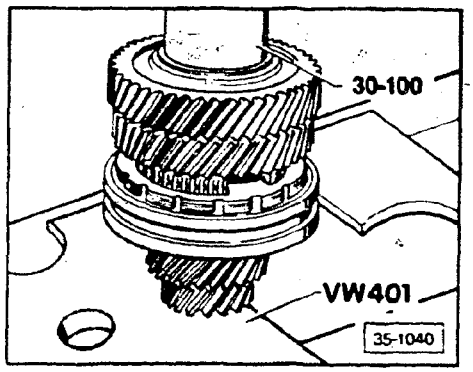

▶ **Fig. 8 5th gear, installing**

- higher collar faces reverse gear
- oil traps face 4th gear

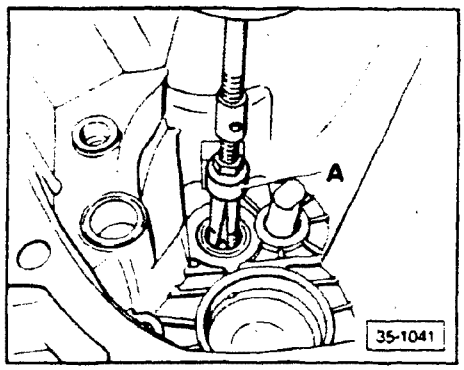

▶ **Fig. 9 Main shaft needle bearing, removing/installing**

- **A** = 22 mm-28 mm puller, e.g. **Kukko 21/4**
- **B** = slide hammer **VW 771**

Note

Before positioning puller to remove bearing, crack/remove plastic sleeve, if present.
To install bearing, drive in with tube **VW 416 B**, to a depth of 214 mm (8.43 in.), as measured from housing face.

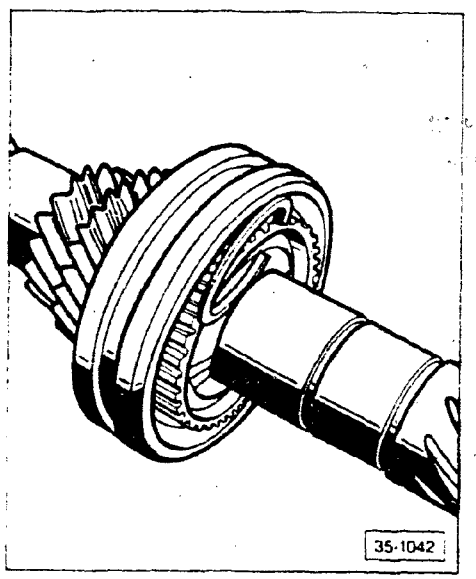

▶ **Fig. 10 4th gear circlip, installing**

- determine the thickest circlip that can be used, and install

Note

5th gear circlip is selected in same manner.

For listing of available circlips, see Fig. 11.

cardiagn.com

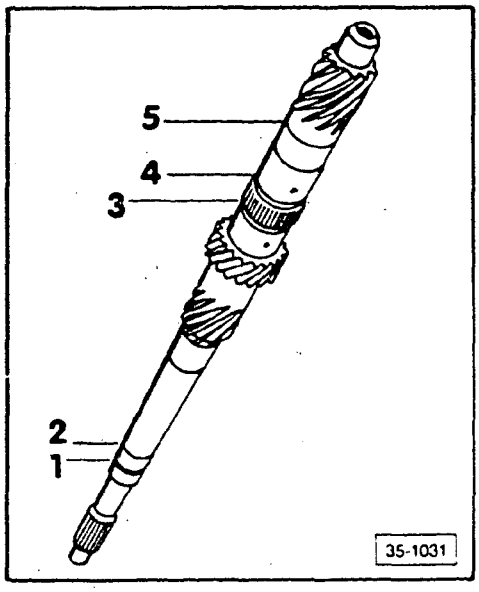

▶ **Fig. 11 Circlips, locating/selecting**

Note

Circlips are identified in the illustration at left, by their respective positions along the main shaft.

Thickness of circlips **1, 2, 4,** and **5** must be determined. Thickness of circlip **3** is always constant.

- determine thickness of circlips **1** and **2**
  - see page 35.9 — Main shaft, adjusting

Circlip **3** (brown)

Thickness of circlip (mm)	Part number
2.00	N 902 945.01

Circlip **4** (blue)

Thickness of circlip (mm)	Part number
1.90	N 902 944.01
1.93	N 902 944.02
1.96	N 902 944.03
1.99	N 902 944.04
2.02	N 902 944.05
2.05	N 902 944.06

Circlip **5**

Thickness of circlip (mm)	Part number
1.90	N 902 942.02
1.93	N 902 942.03
1.96	N 902 942.04
1.99	N 902 942.05
2.02	N 902 942.06

cardiagn.com

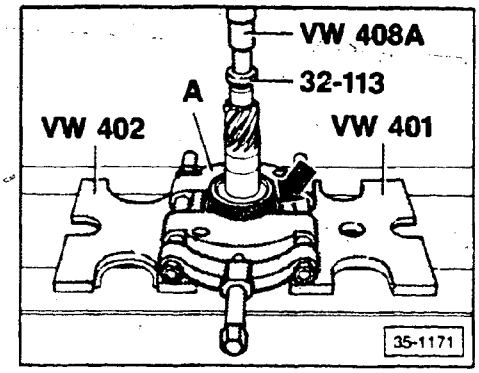

▶ **Fig. 12 3rd/4th gear synchronizer hub, removing**

- position the following tools, as shown:
  - **VW 401/VW 402** = thrust plates
  - **32-113** = disc
  - **VW 408A** = punch
  - **A** = 22 mm-115 mm separating device such as **Kukko 17/2**

Note

Before installing separating device **A**, press 3rd gear synchronizer ring (**arrow**) toward 3rd gear.

- remove synchronizer hub

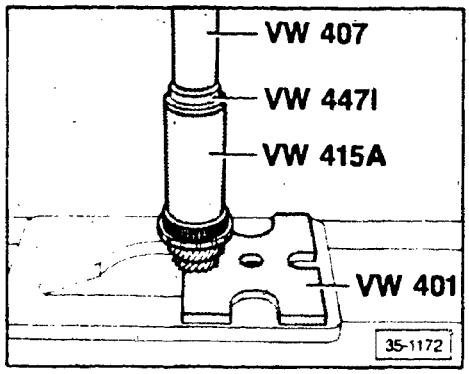

▶ **Fig. 13 3rd/4th gear synchronizer hub, installing**

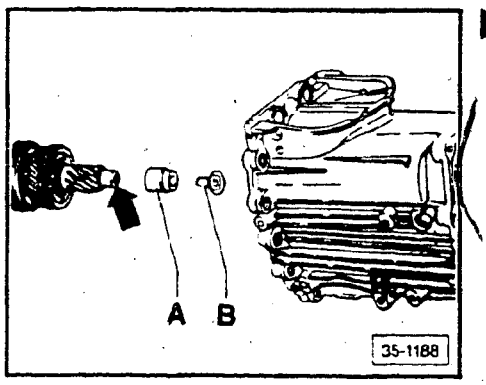

▶ **Fig. 14 Plastic sleeve, installing**

Note

Plastic sleeve **B** is used only on main shafts with oil passages (**arrow**) for 3rd/4th gear.

- install plastic sleeve **B** along with needle bearing **A**

cardiagn.com

Main shaft, adjusting

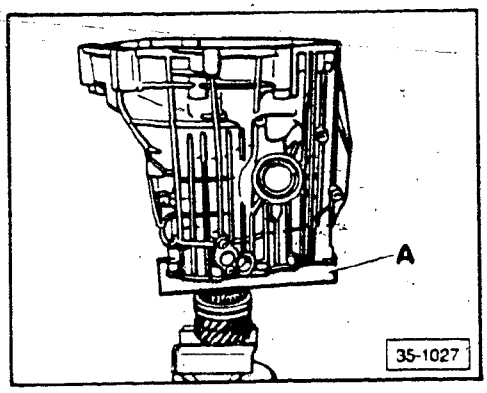

- tighten main shaft in vise equipped with soft jaw covers
- place **A**, spacer gauge **3167**, on 3rd gear
- install housing onto spacer gauge via main shaft

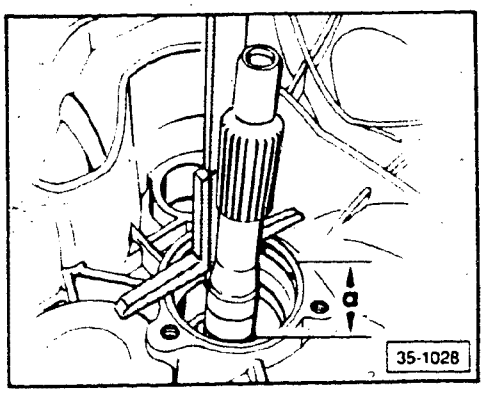

- place depth gauge on housing and measure to the lower groove in shaft
  - dimension **a** = 28.5 mm

cardiagn.com

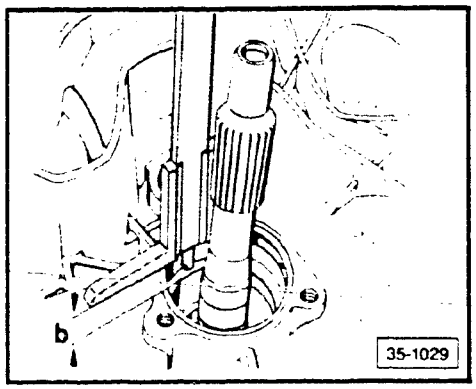

- place depth gauge on housing and measure to ball bearing seat
  - dimension **b** = 26.8 mm
- find thickness for lower circlip

Dimension **x**

x = **a - b**
x = 28.5 mm - 26.8 mm = 1.70 mm

- find circlip thickness in table

Measurement	Thickness	Part number
1.64 - 1.71	1.69	N 902 941.05
1.72 - 1.79	1.77	N 902 941.06
1.80 - 1.87	1.85	N 902 941.07
1.88 - 1.95	1.93	N 902 941.08
1.96 - 2.03	2.01	N 902 941.09
2.04 - 2.11	2.09	N 902 941.10
2.12 - 2.19	2.17	N 902 941.11
2.20 - 2.27	2.25	N 902 941.12
2.28 - 2.35	2.33	N 902 941.13

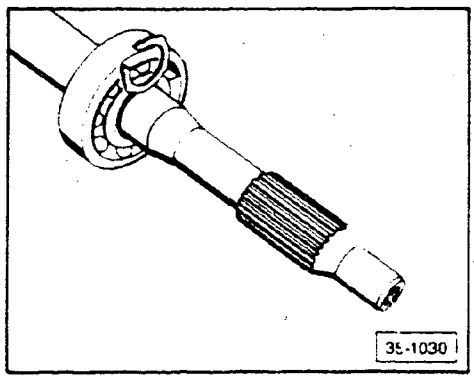

- install circlip and ball bearing on shaft with press tube **30-100**
- find the thickest circlip which can just be inserted

Note

The following circlips are available:

Thickness (mm)	Part number
1.69	N 902 941.05
1.77	N 902 941.06
1.85	N 902 941.07
1.93	N 902 941.08
2.01	N 902 941.09
2.09	N 902 941.10
2.17	N 902 941.11
2.25	N 902 941.12
2.33	N 902 941.13

cardiagn.com

THIS FRAME INTENTIONALLY LEFT

BLANK

cardiagn.com

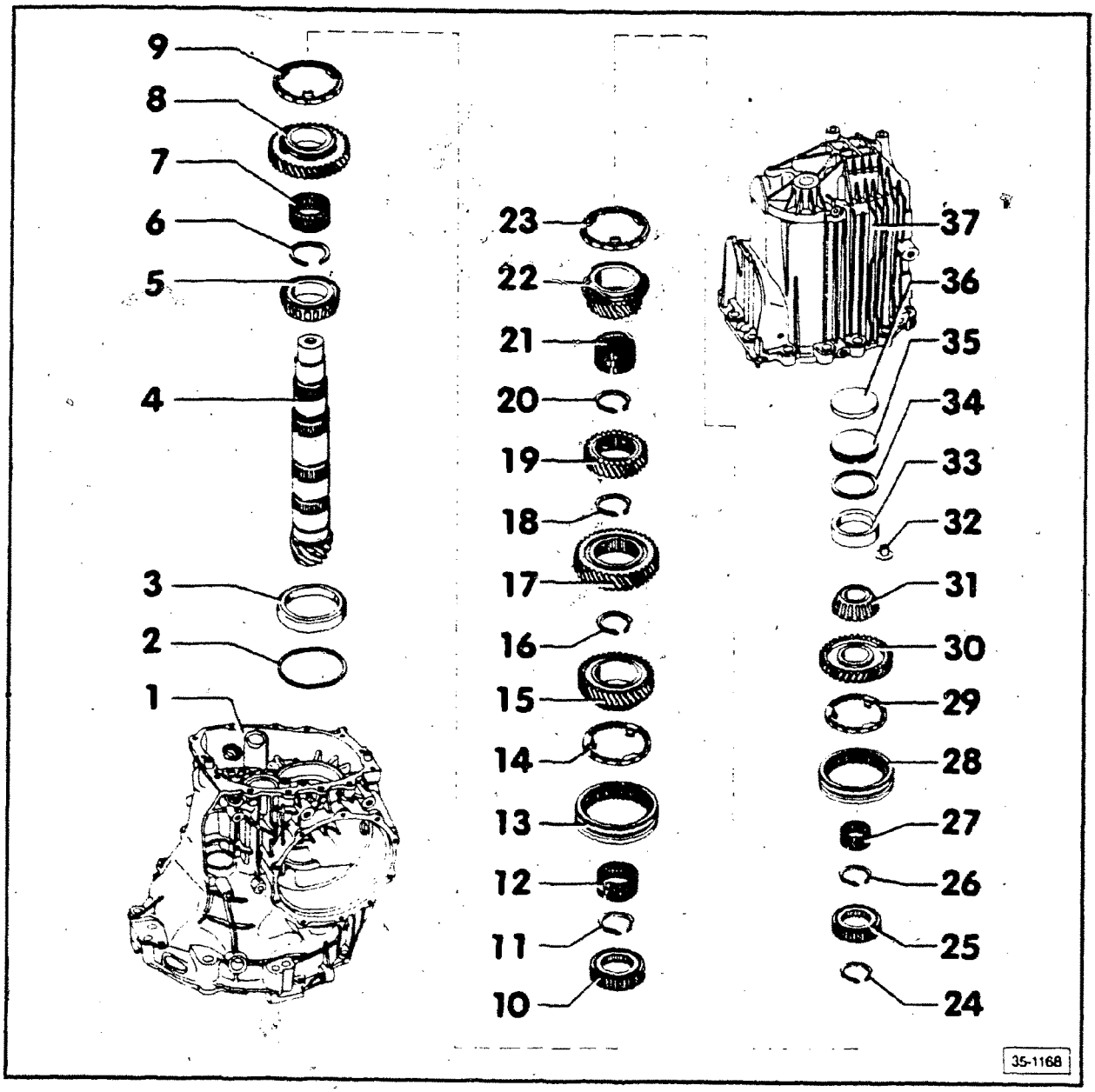

CAUTION

If pinion bearings are to be replaced it is important to measure the position of the pinion before removing it. See Repair Group 39.

Do not damage seal lips between taper roller bearings.

Note

If installing new gears or gear set, refer also to Repair Group 00 for identifications and Repair Group 34 for technical data.
Circlips are different in thickness and diameter and should be measured as they are removed. If a gear or shaft is replaced, the corresponding circlip must be measured for correct fit.

1 — **Final drive housing**

2 — **Shim S3**
adjustment overview (see Repair Group 39)

3 — **Double taper roller bearing — outer race**
- removing, Fig. 1
- installing, Fig. 2

4 — **Pinion**
- matched with ring gear (ring gear pinion set)
- when replacing ring gear pinion set, adjust pinion along with hollow shaft and ring gear (see Repair Group 39)

5 — **Double taper roller bearing — inner race**
- removing, Fig. 3
- installing, Fig. 4

cardiagn.com

6 — **Circlip**
- installing, Fig. 20
- locating/selecting, Fig. 21 (no. 1)

7 — **Needle bearing — 1st gear**

8 — **1st gear**
spring, assembling, Fig. 5

9 — **Synchronizer ring — 1st gear**
checking for wear, Fig. 6

10 — **Synchronizer hub — 1st/2nd gear**
- high collar faces 2nd gear
- press off together with 1st gear; use thrust plates **VW 401** and **VW 402**
- press on with tube **VW 415A** and sleeve **VW 519**

11 — **Circlip**
- installing, Fig. 20
- locating/selecting, Fig. 21 (no. 2)

12 — **Needle bearing — 2nd gear**

13 — **Operating sleeve — 1st/2nd gear**
installing, Fig. 7

14 — **Synchronizer ring — 2nd ring**
checking for wear, Fig. 6

15 — **2nd gear**
spring, assembling, Fig. 5

16 — **Circlip**
locating/selecting, Fig. 21 (no. 3)

17 — **3rd gear**
- groove faces 4th gear
- removing, Fig. 8
- installing, Fig. 9

18 — **Circlip**
- installing, Fig. 20
- locating/selecting, Fig. 21 (no. 4)

19 — **4th gear**
- collar faces 3rd gear
- removing, Fig. 10
- installing, Fig. 11

20 — **Circlip**
- installing, Fig. 20
- locating/selecting, Fig. 21 (no. 5)

21 — **Needle bearing — 5th gear**

22 — **5th gear**
spring, assembling, Fig. 5

23 — **Synchronizer ring — 5th gear**
checking for wear, Fig. 6

24 — **Circlip**
locating/selecting, Fig. 21 (no. 6)

25 — **Synchronizer hub — 5th/reverse gear**
- high collar faces 5th gear
- press off with 5th gear, Fig. 12
- press on using sleeve **2010**

26 — **Circlip**
- installing, Fig. 20
- locating/selecting, Fig. 21 (no. 7)

27 — **Needle bearing — reverse gear**

28 — **Operating sleeve — 5th/reverse gear**
installing, Fig. 16

29 — **Synchronizer ring — reverse gear**
checking for wear, Fig. 6

30 — **Reverse gear**
spring, assembling, Fig. 5

31 — **Taper roller bearing — inner race**
- removing, Fig. 14
- installing, Fig. 15

32 — **Locking bushing for taper roller bearing outer race**
- removing, Fig. 17
- reinstallation not necessary once outer race is replaced (bushing required only during production)

33 — **Taper roller bearing — outer race**
- removing, Fig. 18
- installing, Fig. 19

34 — **Shim S4**
adjustment overview (see Repair Group 39)

35 — **Pressure plate**

36 — **Washer**
- compensates for length, depending on temperature (heat)
- to remove, drill hole in washer and pry out with sheet metal screw

37 — **Gear carrier housing**

cardiagn.com

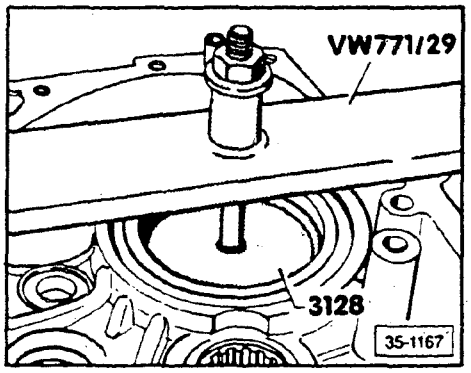

▶ **Fig. 1 Double taper roller bearing — outer race, removing**

- place pressure piece from puller **3128** under outer race
- position support bridge **VW 771/29** and install a bolt on transmission housing
  - when tightening bolt, outer race is pulled out of housing

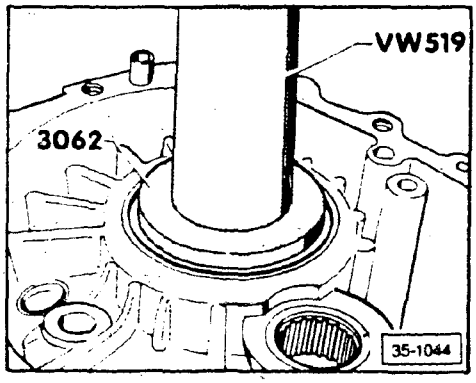

▶ **Fig. 2 Double taper roller bearing — outer race, installing**

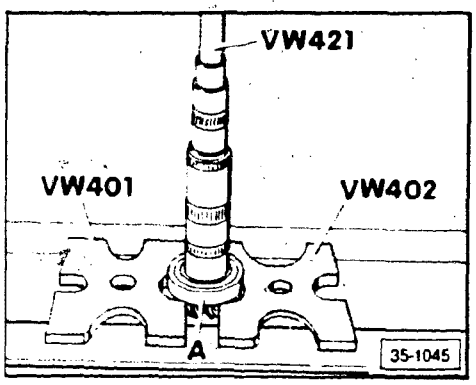

▶ **Fig. 3 Double taper roller bearing — inner race, removing**

Note

Outer race **A** must be in place, to remove inner race.

cardiagn.com

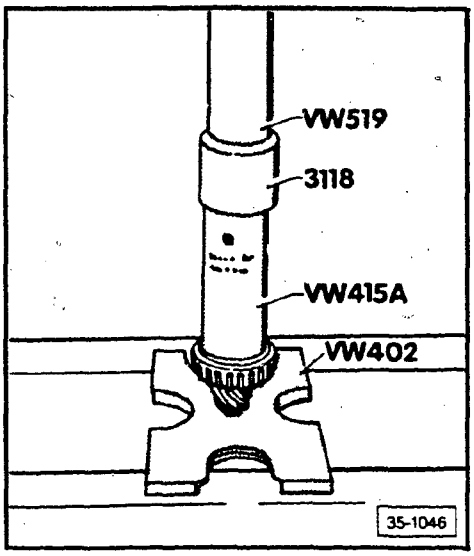

▶ **Fig. 4 Double taper roller bearing — inner race, installing**

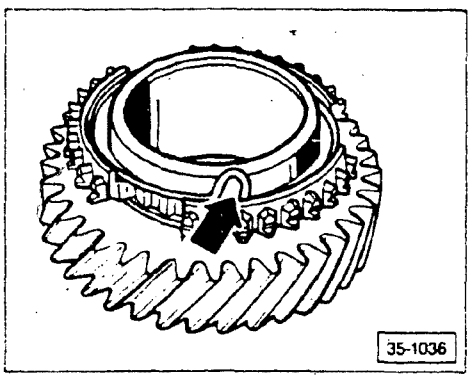

▶ **Fig. 5 Spring, installing in gear**

- assemble spring (**arrow**) in gear by installing angled end of spring in bore

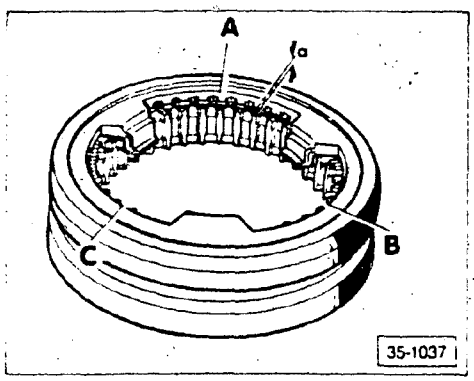

▶ **Fig. 6 Synchronizer ring, checking for wear**

- press synchronizer ring into operating sleeve and measure gap **a** with a feeler gauge in positions **A**, **B**, and **C**
- add values obtained and divide by 3
  - the measured value must not be less than 0.5 mm

cardiagn.com

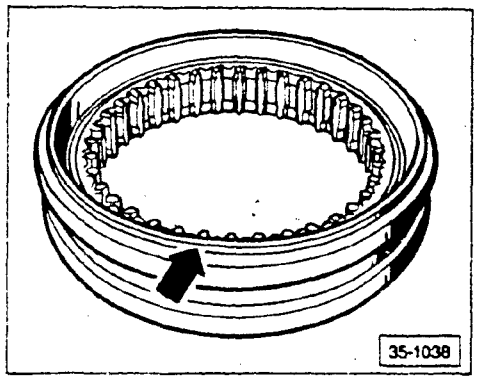

▶ **Fig. 7 Operating sleeve — 1st/2nd gear, installing**

- recessed side (**arrow**) faces 1st gear

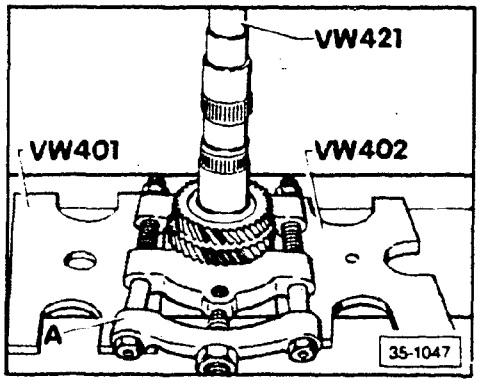

▶ **Fig. 8 3rd gear, removing**

- **A** = 22 mm-115 mm separating device, e.g. **Kukko 17/2**

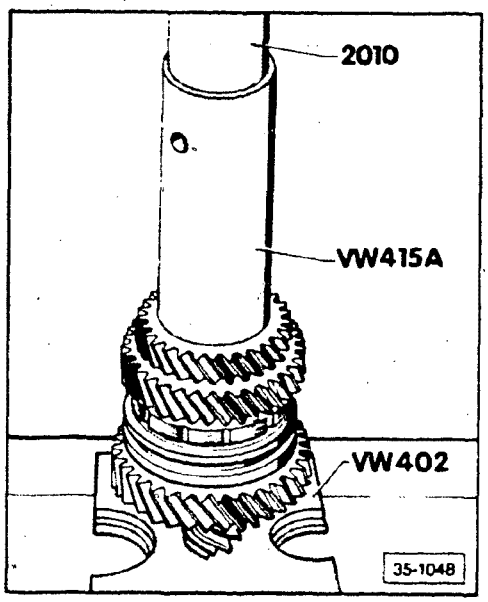

▶ **Fig. 9 3rd gear, installing**

- installation position: groove faces 4th gear

cardiagn.com

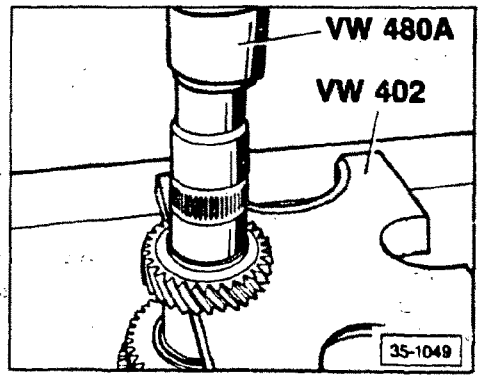

▶ **Fig. 10 4th gear, removing**

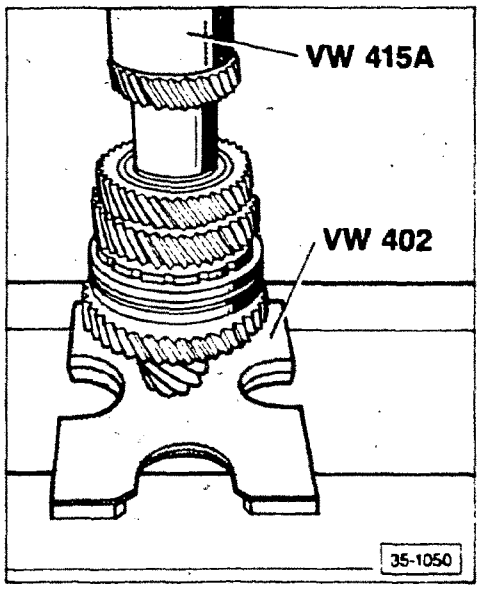

▶ **Fig. 11 4th gear, installing**

- collar faces 3rd gear

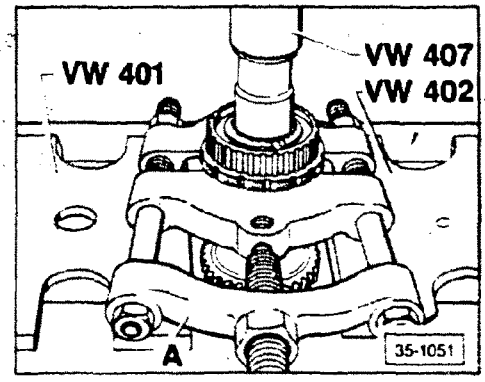

▶ **Fig. 12 Synchronizer hub, removing**

- remove synchronizer hub with 5th gear
  - use 22 mm-115 mm separating device, **A** (e.g. **Kukko 17/2**)

cardiagn.com

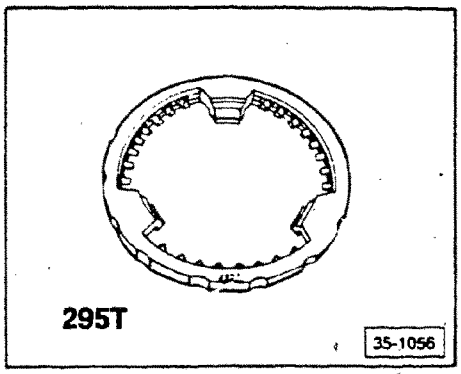

▶ **Fig. 13 Synchronizer ring, identifying**

- the recess above the 3 lugs has been discontinued

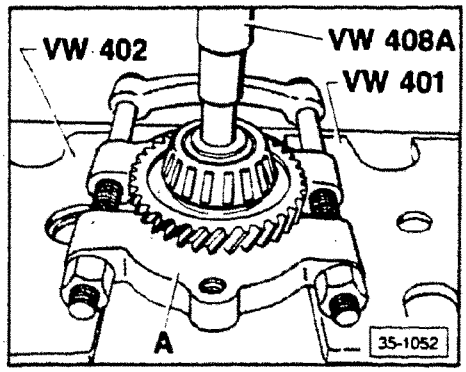

▶ **Fig. 14 Taper roller bearing — inner race, removing**

- remove inner race with reverse gear
  - use 22 mm-115 mm separating device, **A** (e.g. **Kukko 17/2**)

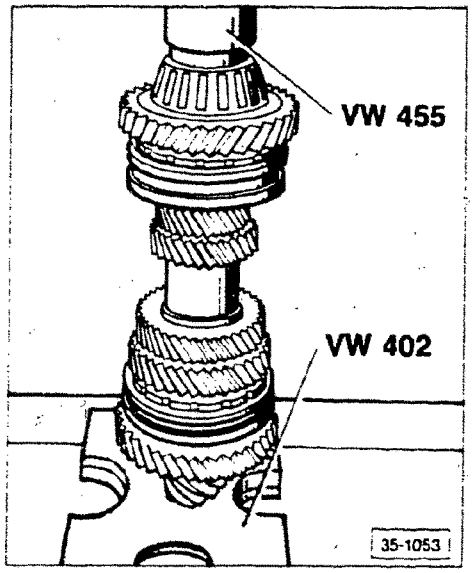

▶ **Fig. 15 Taper roller bearing — inner race, installing**

cardiagn.com

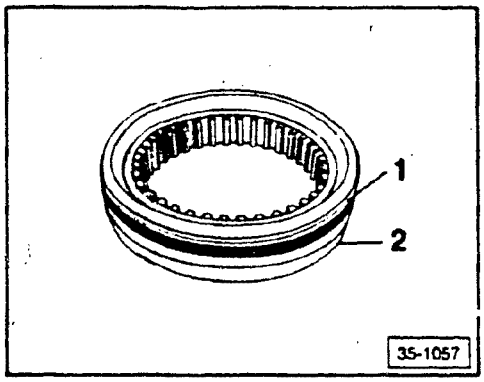

▶ **Fig. 16 Operating sleeve — 5th/reverse gear, installing**

- diagonal **1** faces reverse gear
- recessed side **2** faces 5th gear

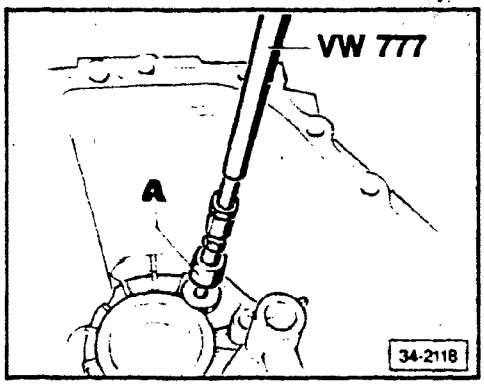

▶ **Fig. 17 Locking bushing for taper roller bearing outer race, removing**

- use 12 mm-15 mm puller, **A** (e.g. **US 1010** or **Kukko 21/1**)

Note

Bushing reinstallation not necessary once outer race is replaced. (Bushing required only during production.)

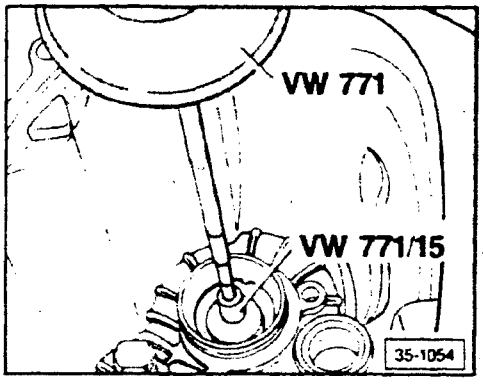

▶ **Fig. 18 Taper roller bearing — outer race, removing**

- thread special removal stud into pressure plate
  - M10 stud (length = 50 mm), reduced at one end to M8 diameter
- remove pressure plate and outer race from housing using slide hammer

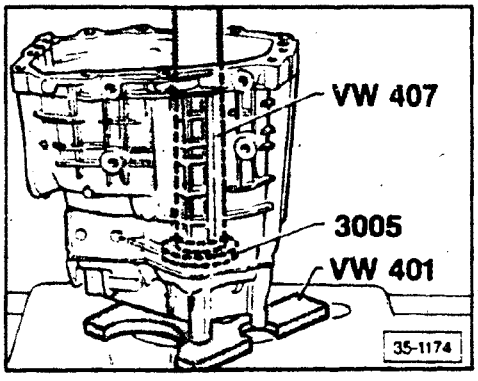

▶ **Fig. 19 Taper roller bearing — outer race, installing**

cardiagn.com

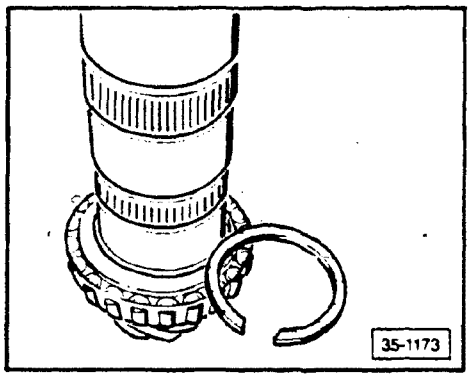

▶ **Fig. 20 Taper roller bearing — circlip, installing**

- determine the thickest circlip that can be used, and install
  - synchronizer hub circlips and 3rd/4th gear circlip are determined in same manner as taper roller bearing circlip

Note

For listing of available circlips, see Fig. 20.

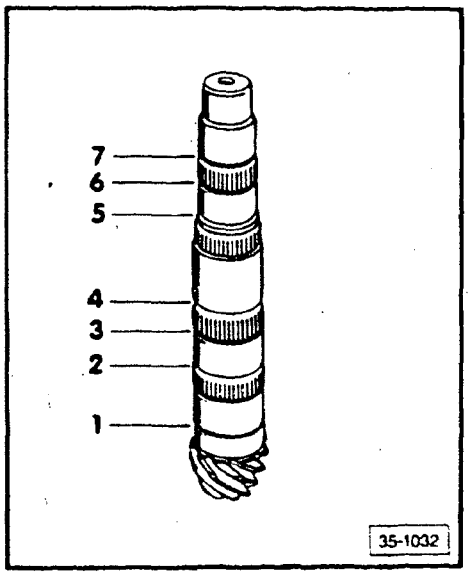

▶ **Fig. 21 Circlips, locating/selecting**

Note

Circlips are identified in the illustration at left, by their respective positions along the pinion shaft.

- determine thickness of circlips **1**, **2**, **4**, **5**, and **7**
  - thickness of circlips **3** and **6** is always constant (see table)

Circlip **1**

Thickness (mm)	Part number
2.00	N 902 950.01
2.02	N 902 950.02
2.04	N 902 950.03
2.06	N 902 950.04
2.08	N 902 950.05
2.10	N 902 950.06

Circlip **2** (blue)

Thickness (mm)	Part number
1.90	N 902 947.01
1.93	N 902 947.02
1.96	N 902 947.03
1.99	N 902 947.04
2.02	N 902 947.05

Circlip **3** (blue)

Thickness (mm)	Part number
2.50	N 902 947.06

cardiagn.com

Circlip 4

Thickness (mm)	Part number
1.90	N 902 946.02
1.93	N 902 946.03
1.96	N 902 946.04
1.99	N 902 946.05
2.02	N 902 946.06

Circlip 5

Thickness (mm)	Part number
1.87	N 902 952.01
1.90	N 902 952.02
1.93	N 902 952.03
1.96	N 902 952.04

Circlip 6 (brown)

Thickness (mm)	Part number
2.00	N 902 945.01

Circlip 7 (blue)

Thickness (mm)	Part number
1.90	N 902 944.01
1.93	N 902 944.02
1.96	N 902 944.03
1.99	N 902 944.04
2.02	N 902 944.05
2.05	N 902 944.06

cardiagn.com

Index

012 Transmission (2WD)

Backlash
- adjusting 39.23
- checking 39.25

Differential housing
- assembly 39.4
- bearings 39.6
- gears, installing 39.8

Drive flange oil seals
- removing/installing 39.2

Flange shaft circlip
- replacing 39.3

Gear carrier housing
- replacing 39.19

Pinion
- adjusting 39.14
- determining position 39.12

Ring gear
- adjusting 39.21
- removing 39.7

Ring gear/pinion
- adjusting 39.9
- adjustment overview 39.11

Shim positions
- illustration 39.13

Speedometer gear
- replacing 39.3

cardiagn.com

Drive flange oil seals, removing/ installing (transmission installed)

Removing

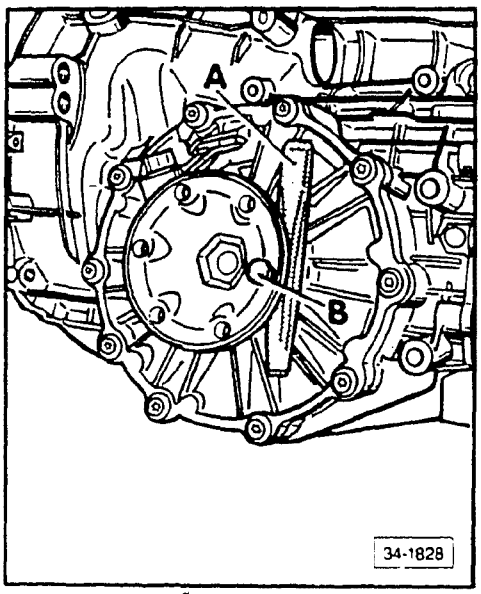

- remove axle shaft from drive flange
- place oil pan under vehicle
- remove flange shaft by placing chisel **A** under flange shaft and turning bolt **B** to pull shaft out
- remove oil seals with extractor lever **VW 681**
- replace flange shaft circlip. See page 39.3

Installing

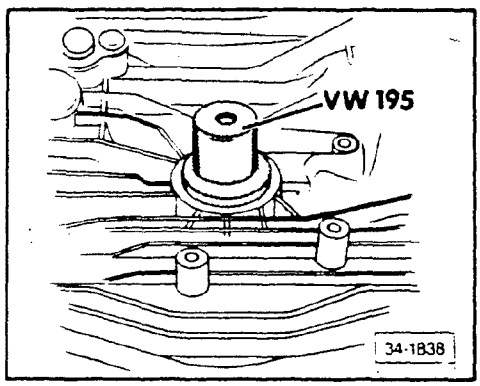

- drive in right side seal 5 mm (0.196 in.) below edge of housing

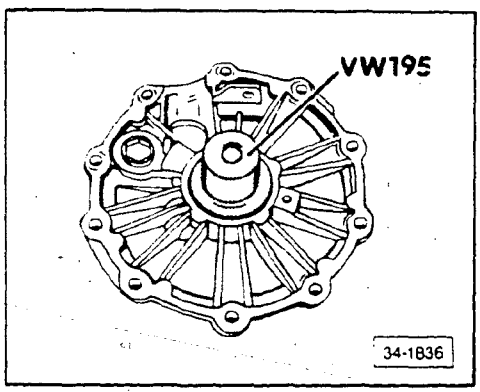

- drive in left side seal 5 mm (0.196 in.) below upper edge of final drive cover
- fill space between lips of seal with multi-purpose grease
- drive in flange shaft with drift **VW 295**
- bolt axle shaft to flange
  - M8 bolts 45 Nm (33 ft lb)
  - M10 bolts 80 Nm (59 ft lb)
- refill transmission oil

cardiagn.com

Flange shaft circlip, replacing

Always replace the flange shaft circlip before installing the flange shaft.

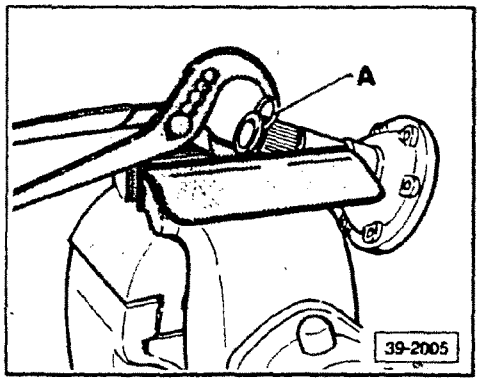

- clamp flange shaft in vise
- place opening of new circlip **A** over opening of old circlip in groove
- press circlip into groove with pliers while also pressing old circlip out

Speedometer gear, replacing

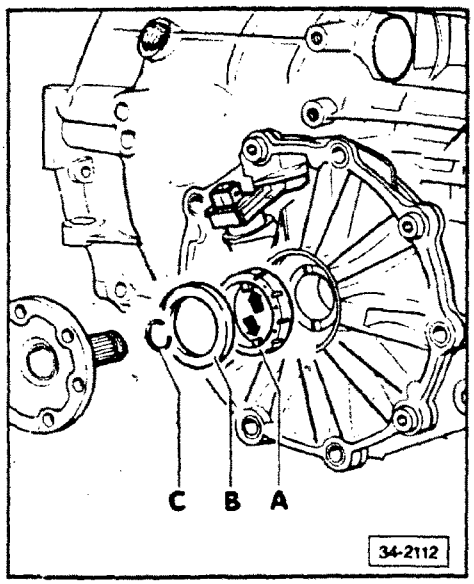

The speedometer gear **A** can be replaced with the transmission installed.

- remove left side axle shaft flange from flange on transmission
- remove flange shaft and seal **B**
- remove speedometer gear **A** by prying alternately on tabs (**arrows**) with a screwdriver

Note

When installing the speedometer gear, the tabs on the gear must point toward the seal. The tabs also lock into grooves in the differential gear housing.

- install new seal **B** and circlip **C** for flange shaft
- top up transmission oil if necessary

cardiagn.com

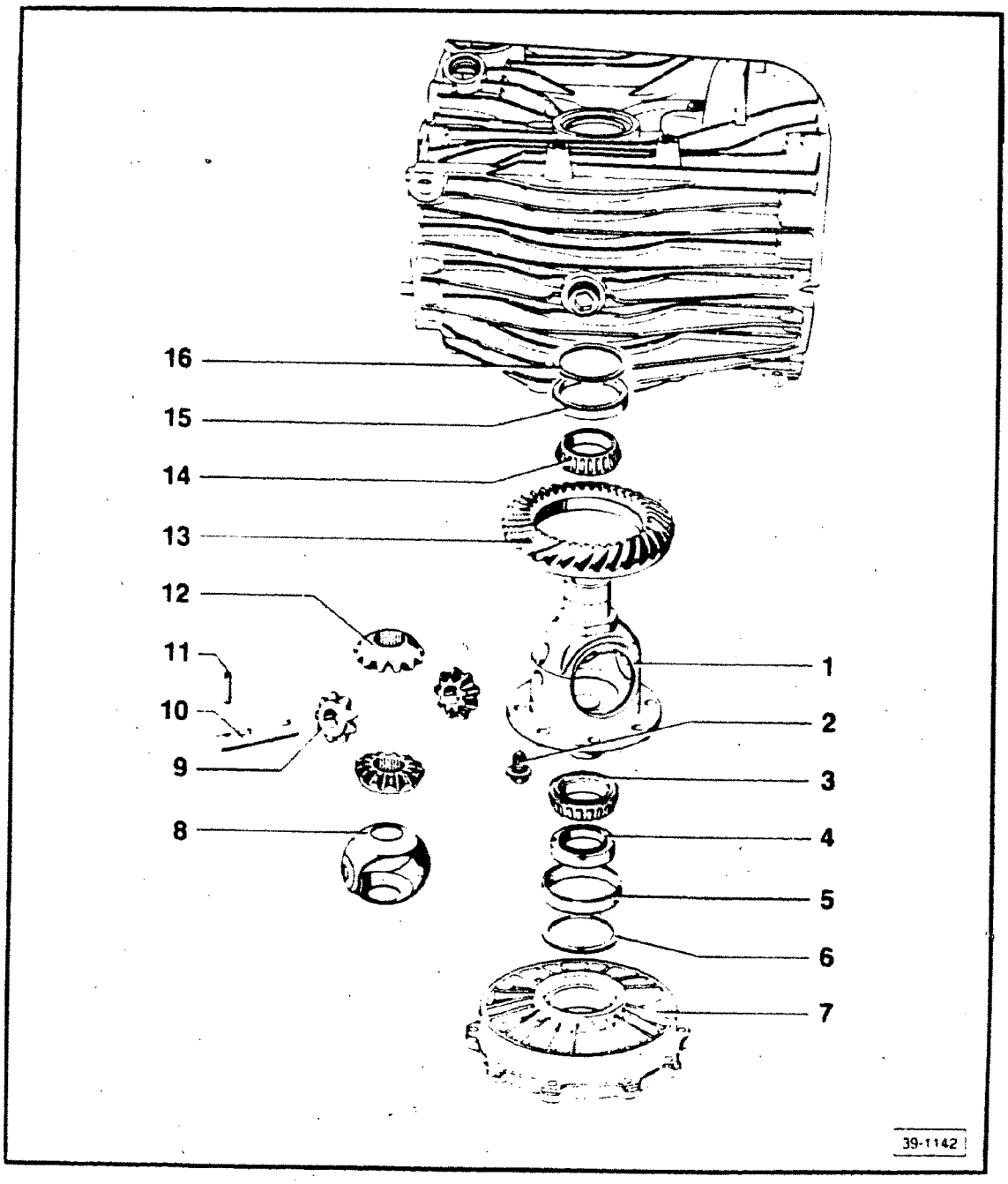

1 — **Differential housing**
adjust ring gear if replacing

2 — **Ring gear bolt**
- use only part number specified
- tighten evenly in diagonal sequence, to **90 Nm (66 ft lb)**

3 — **Differential bearing, large — inner race**
- removing, Fig. 5
- press in with sleeve 40-21

4 — **Speedometer gear**
can be removed with transmission installed

5 — **Differential bearing, large — outer race**
- removing, Fig. 6
- drive in with **VW 295** and **VW 551**

6 — **Shim S1**
- note thickness
- Adjustment Overview, page 39.11

7 — **Cover**

8 — **Thrust washer**
coat with transmission oil before installing

cardiagn.com

9 — Differential pinion gears
installing, Fig. 7

10 — Differential pinion shaft
drive out with drift after removing roll pin

11 — Roll pin
drive out with drift

12 — Differential side gears
installing, Fig. 7

13 — Ring gear
- drive pinion and ring gear are matched set
- when replacing set, adjust (see Adjustment Overview, page 39.11)
- removing, Fig. 4
- installing: heat to 100°C (212°F) and use centering pins to guide part

14 — Differential bearing, small — inner race
- removing, Fig. 3
- press in with sleeve 40-21

15 — Differential bearing, small — outer race
- removing, Fig. 1
- installing, Fig. 2

16 — Shim S2
- note thickness
- Adjustment Overview, page 39.11

cardiagn.com

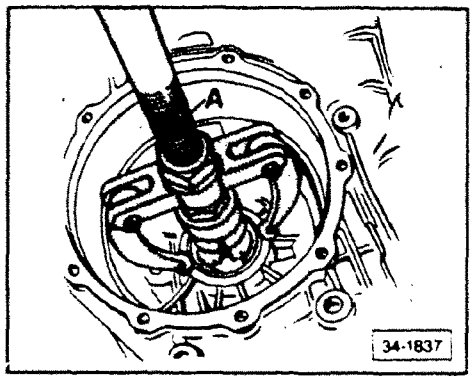

▶ **Fig. 1 Differential bearing, small — outer race, removing**

- use 46 mm-56 mm puller. **A** — e.g. **US 1037 (Kukko 21/7)** or **US 1039 (Kukko 22/2)**

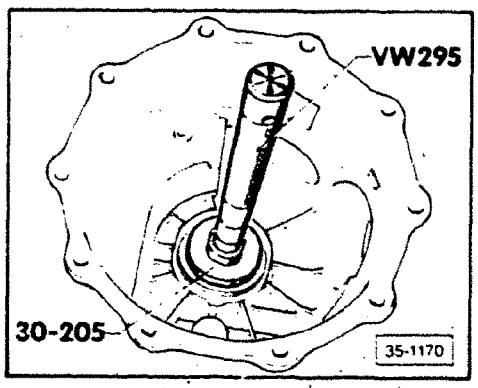

▶ **Fig. 2 Differential bearing, small — outer race, installing**

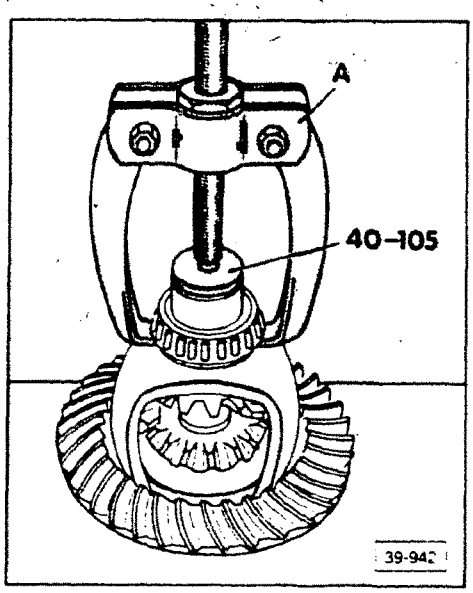

▶ **Fig. 3 Differential bearing, small — inner race, removing**

A — two-arm puller. e.g. **Kukko 44/2**

cardiagn.com

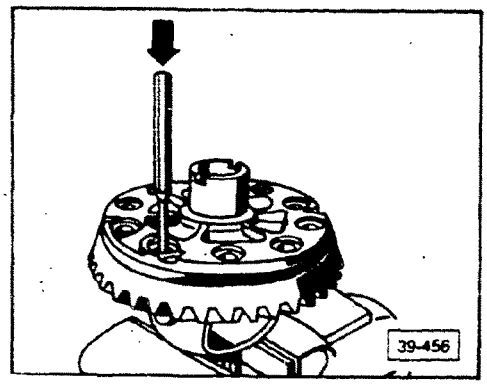

▶ **Fig. 4 Ring gear, removing**

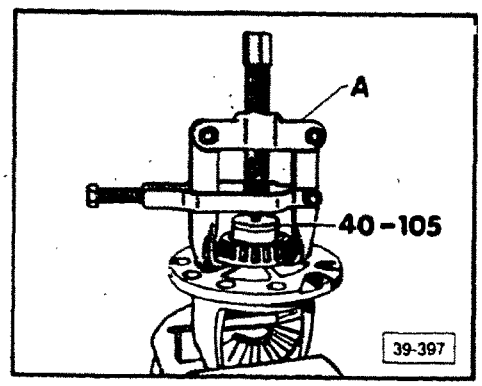

▶ **Fig. 5 Differential bearing, large — inner race, removing**

A — two-arm puller, e.g. **Kukko 204/2**

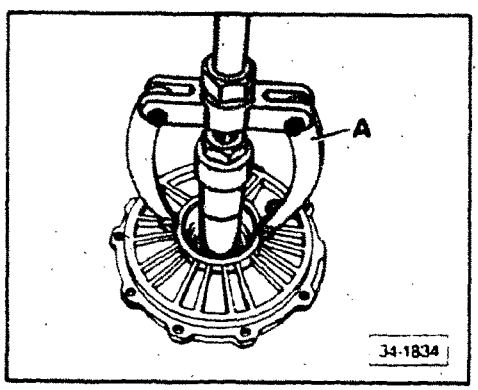

▶ **Fig. 6 Differential bearing, large — outer race, removing**

- use 46 mm- 56 mm puller. **A** — e.g. **US 1037 (Kukko 21/7)** or **US 1039 (Kukko 22/2)**

cardiagn.com

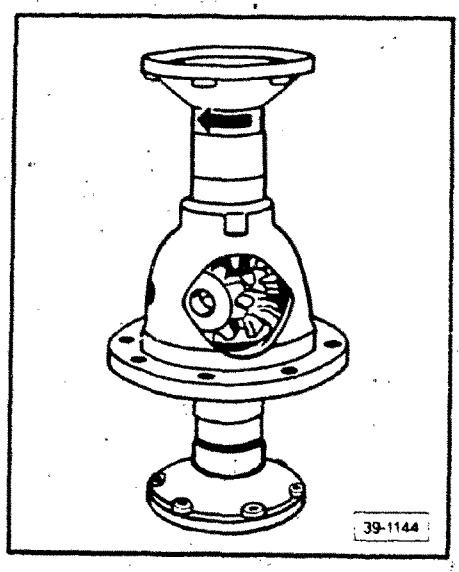

▶ **Fig. 7 Differential gears, installing**

- install one-piece thrust washer coated with transmission oil
- install differential side gears
- install flange shafts without lock ring
- install differential pinion gears approximately 180° apart and pivot into place by turning flange shaft (**arrow**)
- align thrust washers and pinion gears
- drive in differential pinion shaft and secure with roll pin

cardiagn.com

Ring gear/pinion, adjusting

General notes

Careful adjustment of the ring gear and pinion is important to ensure that the final drive runs quietly and has a long service life. During manufacture, the ring gear and pinion are matched to each other, then inspected on special testing machines to ensure a correct mesh pattern and silent running in both directions. The quietest running position is determined by moving the pinion axially and lifting the ring gear away from the no-play meshing position, maintaining the backlash within specified tolerance.

The deviation **r** from the master gage **Ro** is measured for the ring gear pinion sets supplied as replacement parts. The value of **r** is marked on the outer face of the ring gear. Ring gear and pinion must always be replaced as a matched set.

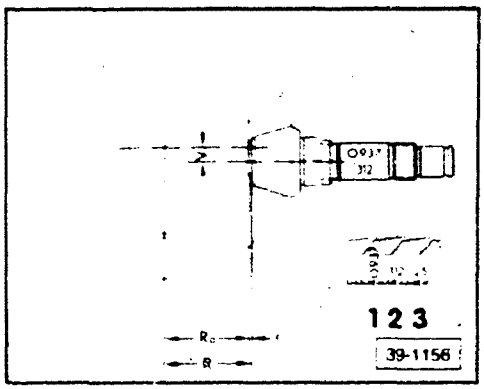

Replacement parts, identifying

1 — Number **O937** identifies Oerlikon gear sets with 9.37 ratio

2 — Matching number **(312)** on ring gear pinion set

3 — Deviation **r** (pinion deviation) measured against the master gage of the testing machine used in production. The deviation **r** is always given in 1 100 mm

Example

"25" means **r** = 0.25 mm

Ro — Length of master gage used in production

Ro = Ring gear diameter 170 mm = 54.95 mm
Ring gear diameter 180 mm = 59.65 mm

R — Actual dimension between ring gear center and end face of pinion in position for the quietest running of the particular gear set

Vo — Hypoid offset = 35 mm

cardiagn.com

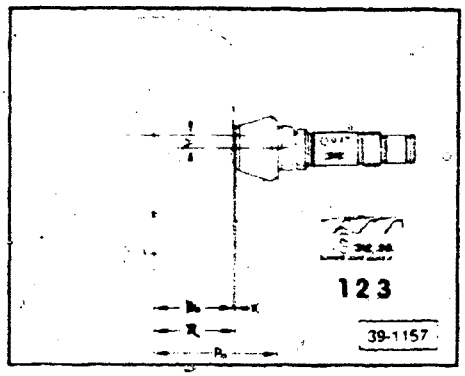

Standard-production gear sets

X — Markings X'ed out are not shown on production gears

Po — The measurement used for setting ring gear pinion in production

CAUTION

In production, the position of the pinion is determined by dimension **Po** (ring gear centerline to back of pinion head). The marking of deviation **r** on the ring gear and the matching number have been eliminated. It is therefore necessary to measure the position of the pinion before removing it when parts that affect the position of the pinion are to be replaced.

cardiagn.com

Adjustment Overview

When assembling the final drive, it is only necessary to adjust the ring gear or pinion or both, if parts have been replaced which **directly** affect the final drive setting. The following table should be used to avoid carrying out unnecessary adjustments.

To be adjusted / Replaced part	Ring gear (S1 + S2) page 39.21	Pinion (S3) using deviation r page 39.14	Pinion (S3) using actual measurement page 39.12	Pinion (shim S4 only) page 39.18
Final drive housing[1]	X		X	
Gear carrier housing				X
Differential housing	X			
Pinion bearings			X	
Differential bearings	X			
Ring gear and pinion	X	X		
Cover on final drive housing	X			

[1]When the final drive housing is replaced, adjust the main shaft. See Repair Group 35.

cardiagn.com

Pinion, determining position

(actual dimension)

This operation is only necessary if deviation **r** is not marked on the ring gear, and both pinion bearings for the pinion and/or the final drive housing have to be replaced. These parts directly affect the position of the pinion.

Differential, removing

- set assemble measuring bar, (see page 39.15)
- install measuring bar into final drive housing
- measure the deviation from **Ro** (maximum deflection in the red range)
  - this reading corresponds with deviation **r**
  - note reading
- after replacing pinion bearings and/or final drive housing, adjust pinion, page 39.14
  - the reading obtained for **r** is used to determine the thickness of shim **S3**.

Ring gear/pinion, adjusting

- determine **S total**, total shim thickness (i.e., **S1** + **S2**) to give specified preload of differential bearings
- determine total shim thickness **S total** (**S3** + **S4**) to give specified preload of differential bearings
- distribute **S total** between **S3** and **S4** so dimension between ring gear centerline and pinion end face corresponds to installation dimension **R** determined in production
- distribute **S total** between **S1** and **S2** to obtain specified backlash between ring gear and pinion

Note

Always try to adjust the ring gear and pinion to obtain the same quiet running position which was determined on the special test machine used in production.

All assembly operations and measurements require great care and absolute cleanliness to produce accurate results.

cardiagn.com

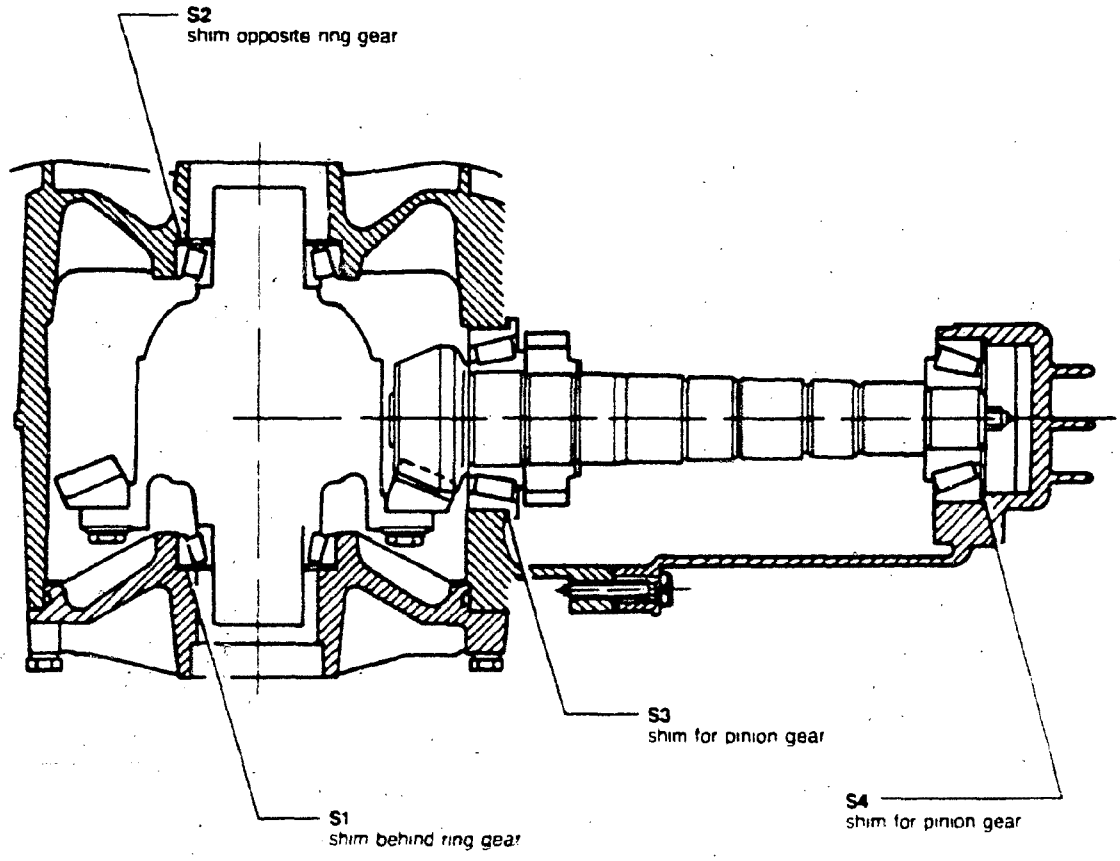

cardiagn.com

Pinion, adjusting

Ring gear pinion needs adjusting if it has been replaced. If other parts which affect position of pinion are to be replaced, setting must be measured before disassembly. Pinion must be re-set to this measured value during reassembly.

Finding total shim thickness i.e., S3 + S4 (adjusting preload of pinion bearings)

- install bearing outer races in housing and gear carrier **without** shims

Note

Always install rubber shim and pressure plate to determine **S4** shim.

Pressure plates of 14.8 mm or 15.3 mm can be installed — see Repair Group 35.

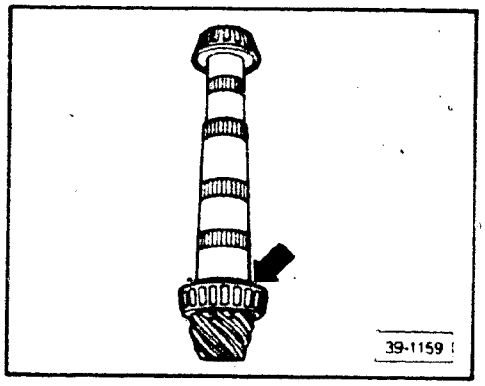

- install pinion bearing inner races
- secure lower bearing (**arrow**)

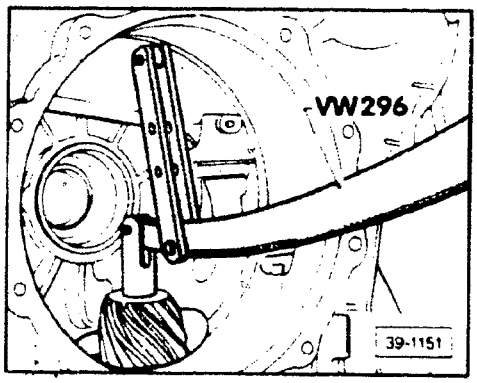

- install assembled pinion into final drive housing
- install gear carrier housing and tighten bolts to 25 Nm (18 ft lb)
- turn final drive so gear housing faces down
- press pinion head on with **VW 296** until pinion bearing outer race contacts housing
- turn pinion manually until pinion bearing is seated

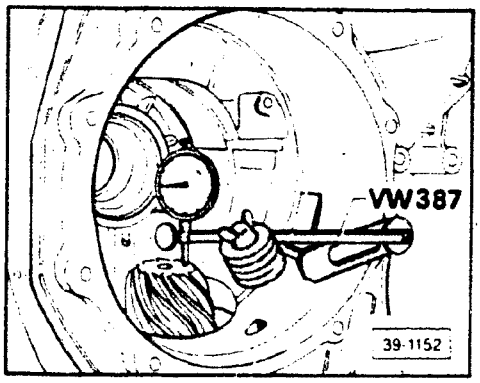

- install dial indicator (3 mm range) and set to zero with 1 mm preload
- turn final drive so cover faces up

CAUTION

Turn pinion before measuring so pinion bearing seats, or measurement will be inaccurate.

cardiagn.com

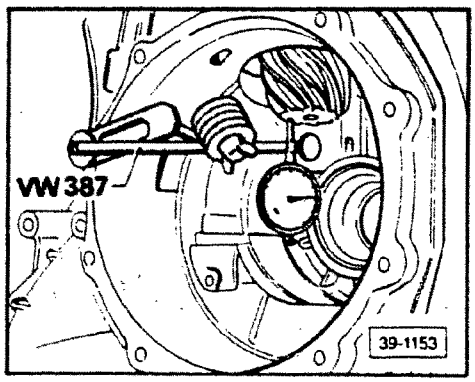

- read measurement
- determine **S total**, total shim thickness (i.e., **S3 + S4**), using the following method:

S total (i.e., S3 + S4), determining

S total = Dial indicator reading + preload

Example

Dial indicator reading (example)	1.45 mm
Preload (constant value)	+ 0.15 mm
S total	= 1.60 mm

Pinion bearing preload, checking

- select shims with combined thickness of **S total** value (e.g. 1.60 mm). Install behind pinion bearing outer race
  - for available shims, see page 39.17

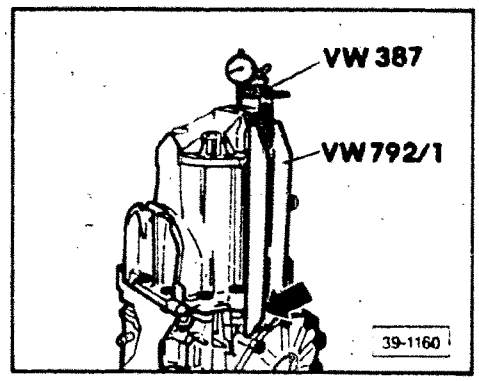

- install gear carrier housing
- turn pinion in both directions several times to seat bearings
- install dial indicator (3 mm range) and zero it with 1 mm preload
- loosen bolts on gear carrier housing
  - dial indicator will display a value of 0.08 mm to 0.15 mm, with proper selection of adjustment shims

Dimension "e," determining

- install determined **S total** (e.g. 1.60 mm) behind pinion bearing outer race in gear carrier housing
- install gear carrier housing
- turn pinion in both directions several times to seat bearings

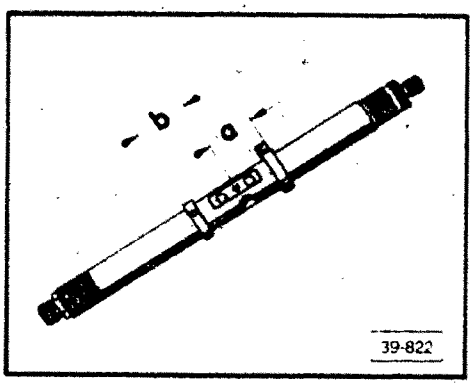

- set universal measuring bar **VW 385/1** centering ring to dimension **a** = 35 mm
- set sliding ring to dimension **b** = 75 mm

cardiagn.com

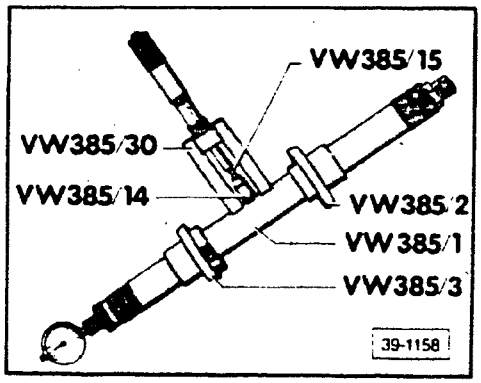

- assemble bar as shown
  - indicator extension **VW 385/15** = 9.3 mm with **Ro** = 59.65 mm
  - indicator extension **VW 385/15** = 6.5 mm with **Ro** = 54.95 mm
- set universal master gage **VW 385/30** for **Ro**:
  - 180 mm diameter ring gear = 59.65 mm
  - 170 mm diameter ring gear = 54.95 mm
- place master gage on measuring bar and set dial indicator (3 mm range) to zero with 1 mm preload

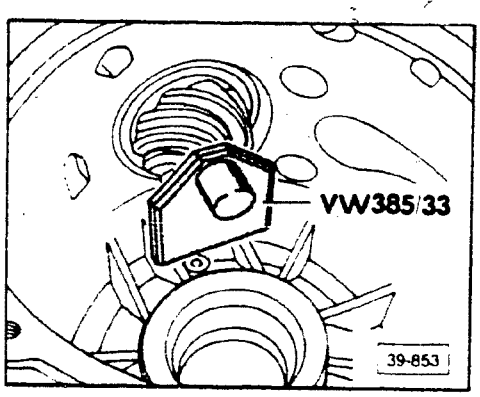

- place end plate **VW 385/33** on pinion end face
- remove master gage and install measuring bar in housing
  - centering disc **VW 385/3** faces final drive cover

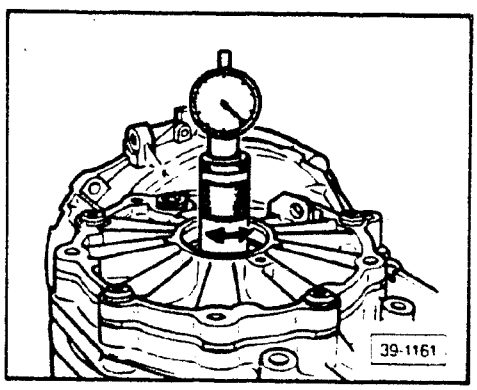

- install cover for final drive housing and tighten four bolts
- pull 2nd centering ring outward until measuring bar can just be turned by hand

Dimension "e," measuring

- turn measuring bar slightly until dial indicator contacts end face of pinion and indicates maximum deflection (return point)
  - measured reading = dimension "**e**"

Example

e = 0.46 mm

cardiagn.com

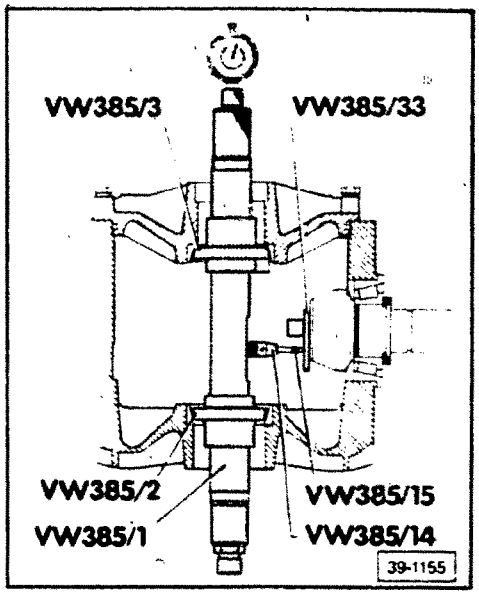

Shim S3, determining thickness

S3 = e + r

e — dial indicator reading (maximum deflection)
r — deviation (marked on ring gear in 1/100 mm or determined by actual measurement)

Example

Dial indicator reading **e**	0.46 mm
Deviation **r**	+ 0.18 mm
Shim thickness **S3**	= 0.64 mm

The following shims are available:

Thickness (mm)	Part number
0.55	012 311 391 C
0.60	012 311 391 D
0.65	012 311 391 E
0.70	012 311 391 F
0.75	012 311 391 G
0.80	012 311 391 H
0.85	012 311 391 J
0.90	012 311 391 K
0.95	012 311 391 L
1.00	012 311 391 M
1.05	012 311 391 N

Shim S4, determining thickness

S4 = S total – S3

Example

Total shim thickness	1.60
S3 shim thickness	– 0.64
S4 shim thickness	= 0.96

The following shims are available:

cardiagn.com

Thickness (mm)	Part number
0.45	012 311 393
0.49	012 311 393 A
0.53	012 311 383 B
0.57	012 311 393 C
0.61	012 311 393 D
0.65	012 311 393 E
0.69	012 311 393 F
0.73	012 311 393 G
0.77	012 311 393 H
0.81	012 311 393 J
0.85	012 311 393 K
0.89	012 311 393 L
0.93	012 311 393 M
0.97	012 311 393 N
1.01	012 311 393 P
1.05	012 311 393 Q
1.09	012 311 393 R
1.13	012 311 393 S
1.17	012 311 393 T
1.21	012 311 393 AA
1.25	012 311 393 AB
1.29	012 311 393 AC
1.33	012 311 393 AD
1.37	012 311 393 AE
1.41	012 311 393 AF
1.45	012 311 393 AG
1.49	012 311 393 AH

Note

Pressure plates of 14 8 mm or 15.3 mm can be installed — see Repair Group 35.

Due to varying tolerances, check all shims with a micrometer for correct thickness. Exact shim thickness can be attained by using shims that are thicker or thinner than specifications.

cardiagn.com

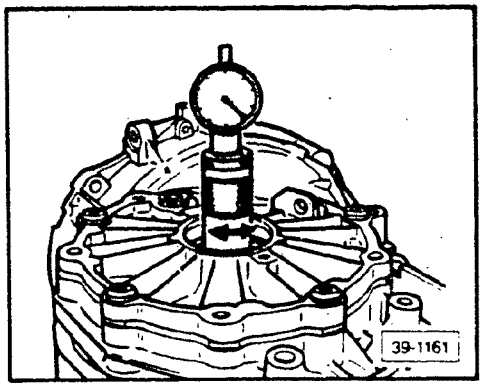

Dimension r, checking

- install pinion with measured shims **S3** and **S4** and turn several times in both directions
- place measuring bar in position and check measurements
  - adjustment shims are correct if dial indicator, reading counterclockwise (red range), shows deviation **r** within tolerance of 0.04 mm

Gear carrier housing, replacing

Shim S4, redetermining

If only the gear carrier housing is to be replaced, only the **S4** shim has to be remeasured.

- clean mating surfaces of gear carrier housing and final drive housing
- install pinion in old gear carrier housing
- turn pinion to seat bearing

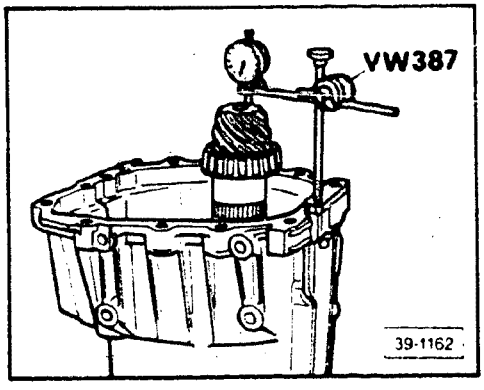

- place measuring device on housing
- zero dial indicator (3 mm range) with 1 mm preload
- remove **VW 387** complete with dial indicator

- remove pinion and bearing outer race with pressure plate, adjustment shim and washer and install in new housing. See Repair Group 35
- install dial indicator on new housing with **VW 387**
- read value on dial indicator

Example

preload	1.00 mm
dial indicator reading	- 0.88 mm
	x = 0.12 mm

shim thickness **S4**	0.77 mm
value **x**	+ 0.12 mm
	= 0.89 mm

- select shims from table on page 39.18

cardiagn.com

Note

If the dial indicator reading is greater than 1.00 mm, the **S4** shim must be reduced by the value **x**.

- install gear carrier housing and check preload of pinion bearing

cardiagn.com

Ring gear, adjusting

Differential, adjusting

- the ring gear must be adjusted if any of the following parts are replaced:

  Final drive housing
  Gear carrier housing
  Differential bearings
  Differential gear housing
  Ring and pinion set

See Adjustment Overview, page 39.11.

Differential bearings preload, adjusting (pinion removed)

- remove oil seals and outer races of differential bearings
- install bearing outer races **without** shims and drive in to stop
- install differential gear into housing without speedometer gear
  - ring gear on left side (opposite cover side)
- install cover and tighten bolts to 25 Nm (18 ft lb)

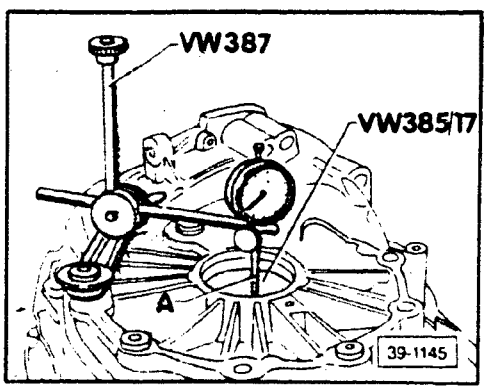

- attach measuring equipment
- zero dial indicator (3 mm range) with a 1 mm preload

  A — dial indicator extension, 30 mm long

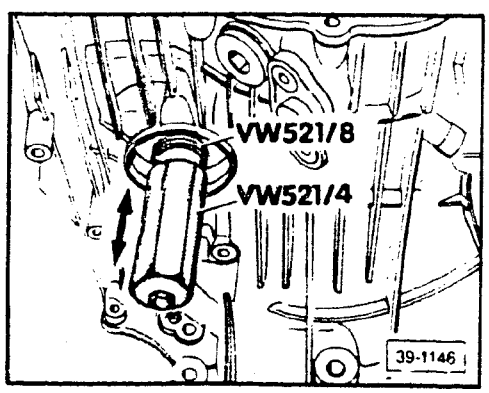

- install **521/4** and **521/8** on final drive housing. Use **521/7** for smaller differential gear housing
- move differential up and down
- read end play from dial indicator and note reading

cardiagn.com

Example

Dial indicator reading = 1.42 mm

CAUTION While taking measurements, do not turn differential or the bearings will settle, resulting in an incorrect reading.

S total (i.e., **S1** + **S2**), determining

S total = dial indicator reading + preload

Example

Dial indicator reading (example)	1.42 mm
Preload (constant value)	+ 0.50 mm
S total	1.92 mm

- install shim of appropriate thickness (1.92 mm in example) behind bearing outer race in final drive housing (**S2** side)

Note

See table of shims on page 39.24.

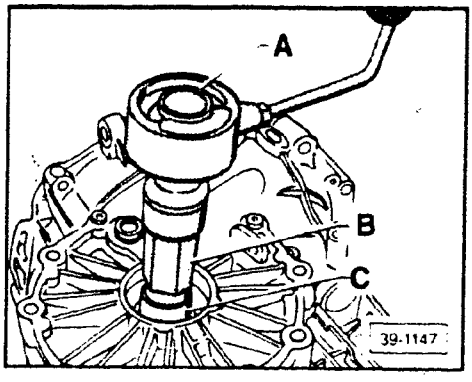

Turning torque, measuring

A — commercial torque wrench 0-600 Ncm (0-60 in. lb or 0-65 cm kg)

B — locking sleeve, **VW 521/4**
C — bushing, **VW 521/8**. For smaller differential gear housings, use **VW 521/7**

- lubricate bearing with transmission oil
- check that turning torque equals:
  - new bearings = 250-350 Ncm (22-31 in. lb or 26-36 cm kg)
  - used bearings = 30-60 Ncm (3-5 in. lb or 3-6 cm kg)

Note

After these procedures, perform a pinion adjustment inspection, page 39.14.

cardiagn.com

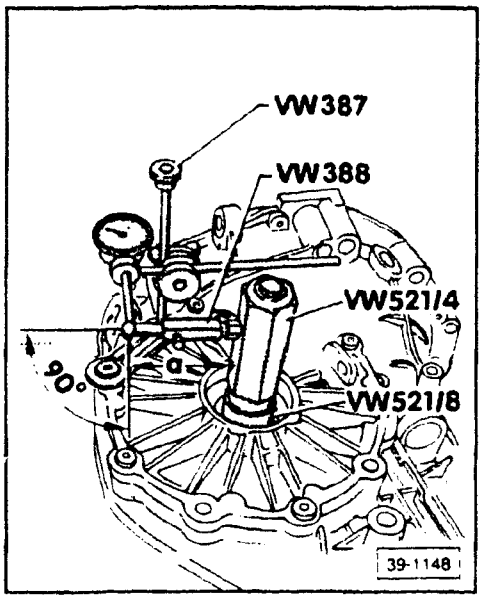

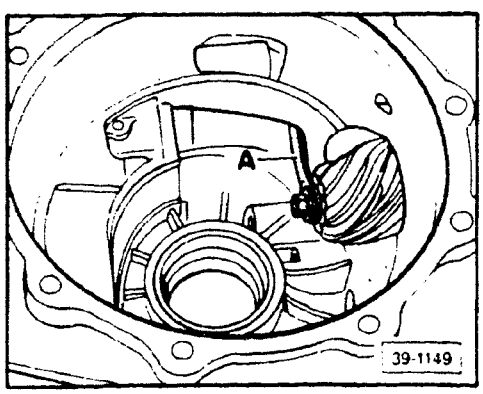

Backlash, adjusting

- install pinion with shims **S3** and **S4** installed
- select shims with combined thickness of **S total** (i.e., **S1** + **S2**). Install on housing side of differential
- turn differential several times to seat bearings
- attach measuring equipment

Note

Use **521/7** for smaller ring gear.

- use dial indicator extension **VW 382/10** (6 mm flat)
- adjust measuring lever **VW 388** to
  a = 170 mm ring gear = 67 mm
  180 mm ring gear = 72 mm
- while holding pinion from moving, turn ring gear to stop and set indicator to zero
- turn ring gear back and note backlash

Note

If pinion turning torque is too low, install bracket **A** (tool **3177**) to measure backlash precisely. The differential must be installed so the opening for installation of gears faces the pinion.

- loosen lock bolt on locking sleeve
- rotate ring gear 90°; tighten lock bolt and measure backlash again
- repeat above procedures at least two more times
- add all four readings together and divide by four to determine average backlash

Average backlash, calculating

Example

1st measurement	0.84 mm
2nd measurement	0.85 mm
3rd measurement	0.84 mm
4th measurement	0.83 mm
Total	= 3.36 mm

Average backlash = 3.36 mm ÷ 4 = 0.84 mm

cardiagn.com

Note

If measurements differ by more than 0.06 mm from each other, ring gear/pinion installation is incorrect. Check ring gear and pinion; if necessary, replace.

Shim S2, determining thickness

(side opposite from ring gear)

S2 = S total **– average backlash** **+ lift (constant value of 0.15 mm)**

Example

S total	1.92 mm
minus backlash	– 0.84 mm
	= 1.08 mm
plus lift	+ 0.15 mm
S2	= 1.23 mm

Shims available

Thickness (mm)	Part number
0.45	012 409 386
0.50	012 409 386 A
0.55	012 409 386 B
0.60	012 409 386 C
0.65	012 409 386 D
0.70	012 409 386 E
0.75	012 409 386 F
0.80	012 409 386 G
0.85	012 409 386 H
0.90	012 409 386 J
0.95	012 409 386 K
1.00	012 409 386 L

Shim thicknesses make it possible to select any required thickness.

cardiagn.com

Shim S1, determining thickness (ring gear side)

S1 = S total – S2

Example

S total	1.92 mm
minus **S2**	– 1.23 mm
S1	= 0.69 mm

Shims available

Thickness (mm)	Part number
0.45	012 409 385
0.50	012 409 385 A
0.55	012 409 385 B
0.60	012 409 385 C
0.65	012 409 385 D
0.70	012 409 385 E
0.75	012 409 385 F
0.80	012 409 385 G
0.85	012 409 385 H
0.90	012 409 385 J
0.95	012 409 385 K
1.00	012 409 385 L

Shim thicknesses make it possible to select any required thickness.

Backlash, checking

- measure backlash four times around circumference of ring gear
  - acceptable values can range from 0.12-0.22 mm
  - no two values can deviate **from each other** by more than 0.05 mm

cardiagn.com

Index

Clutch
- assembly 30.8

Clutch disc
- checking runout 30.10

Clutch hydraulic
- assembly 30.4

Clutch pedal
- assembly 30.2
- clevis adjusting/checking 30.3

Clutch, pressure plate
- checking 30.9
- replacing 30.9

Clutch release
- assembly 30.6

Clutch troubleshooting
- charts 30.11

cardiagn.com

Note

Lubricate all bearing and friction surfaces with MoS_2 grease.

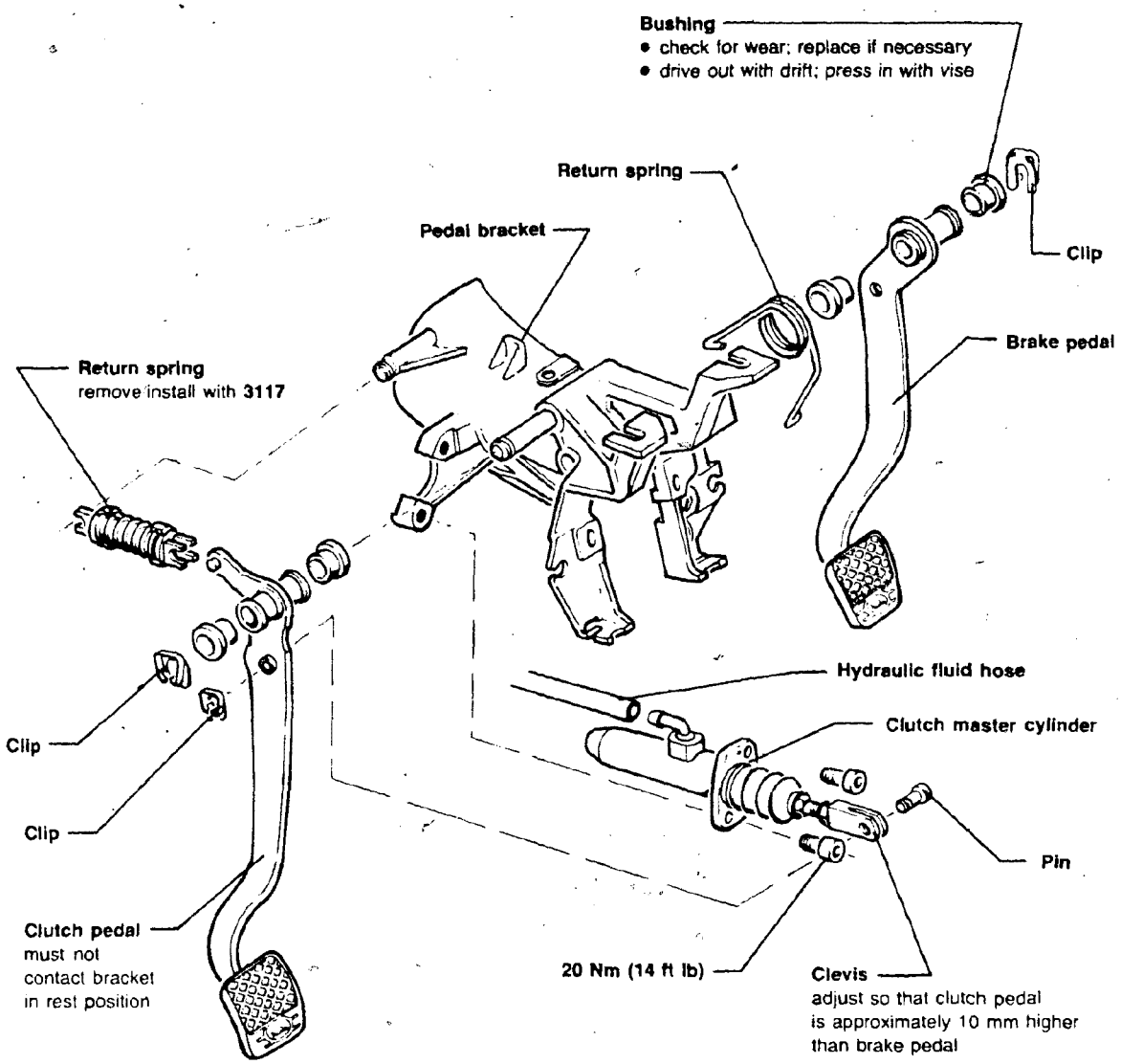

CAUTION

If clutch pedal does not return properly even though the clevis is set correctly, this may be due to:

- air in hydraulic system
- stiffness in pedal bushings or return spring

Brake pedal travel must not be shortened by excess carpeting.

30-290

cardiagn.com

THIS FRAME INTENTIONALLY LEFT

BLANK

cardiagn.com

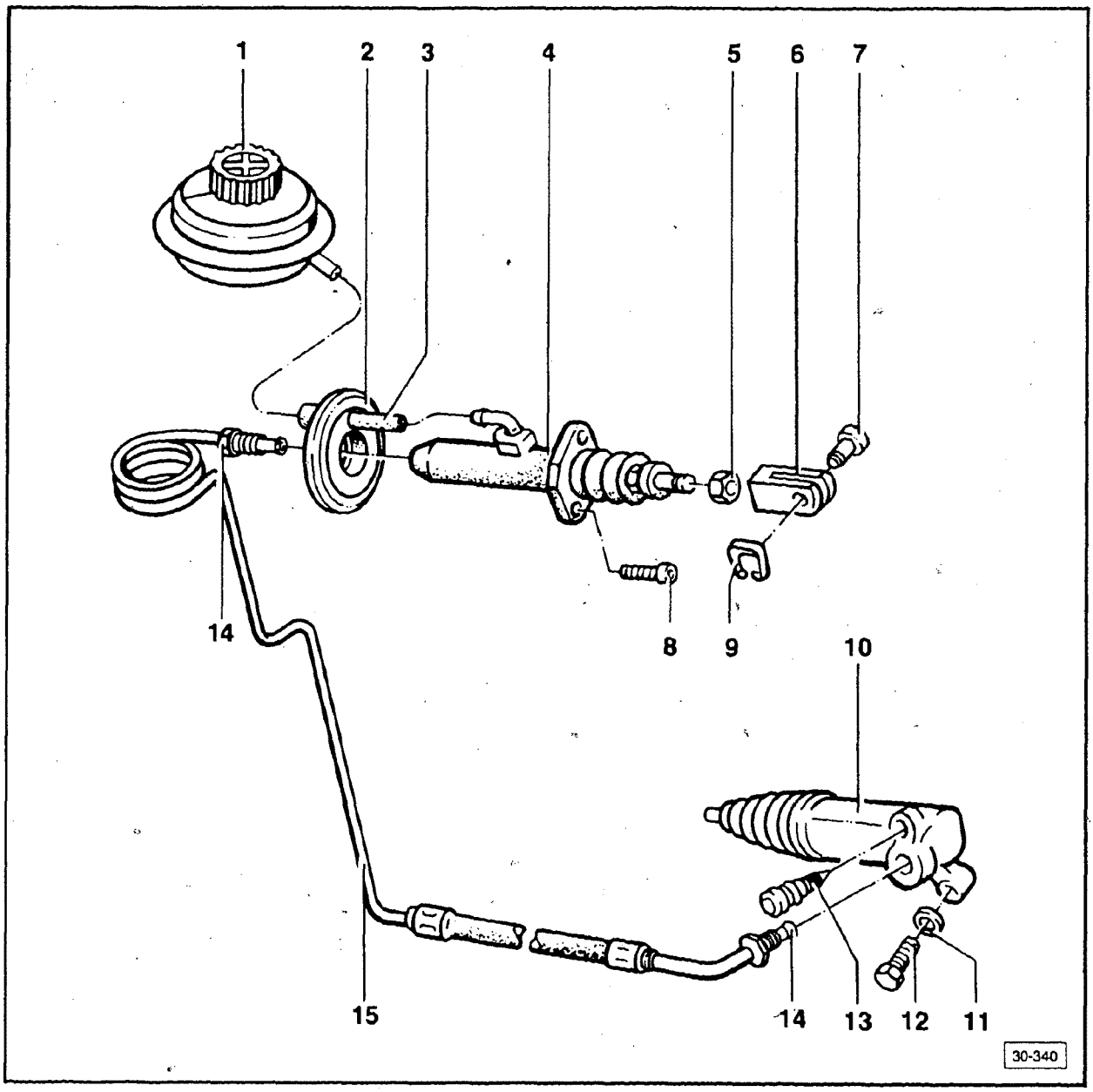

1 — Hydraulic fluid reservoir

2 — Seal

3 — Hydraulic fluid hose

4 — Clutch master cylinder

5 — Lock nut

6 — Clevis

7 — Pin

8 — 20 Nm (14 ft lb)

9 — Retainer

10 — **Slave cylinder**
if slave cylinder has plastic support ring, lightly grease outer surface of ring when installing

CAUTION

Once slave cylinder has been removed, do not depress clutch pedal.

11 — Washer

12 — 25 Nm (18 ft lb)

cardiagn.com

13 — **Bleeder valve**
- open only to bleed
- use brake bleeder **US 1116**
- maximum working pressure: 2.5 bar (36.25 psi)

14 — **Line connector — 15 Nm (11 ft lb)**

15 — **Pressure line**
with pressure hose

cardiagn.com

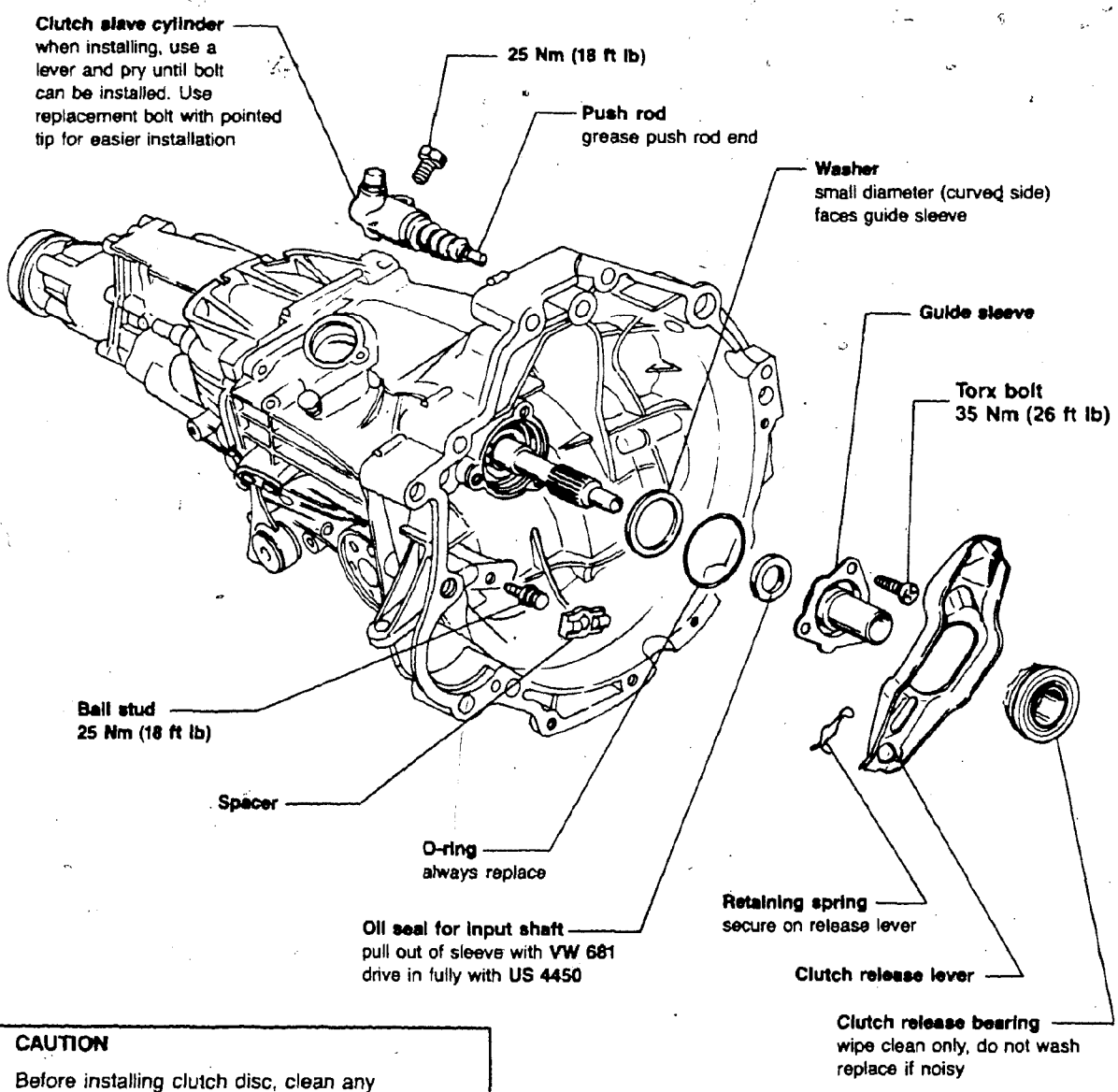

CAUTION

Before installing clutch disc, clean any corrosion or grease residue, both from input shaft splines, and from hub teeth if disc is to be re-used. Apply extremely light coating of grease, Part No. **G 000 100**, to splines of input shaft only. Place disc on shaft and move back and forth until disc hub slides easily. Remove ALL excess grease.

cardiagn.com

Note

Remove transmission to repair clutch.

CAUTION

Clutch discs and pressure plates are protected against corrosion. Only the contact surface may be cleaned, as otherwise the service life of the clutch will be considerably shortened.

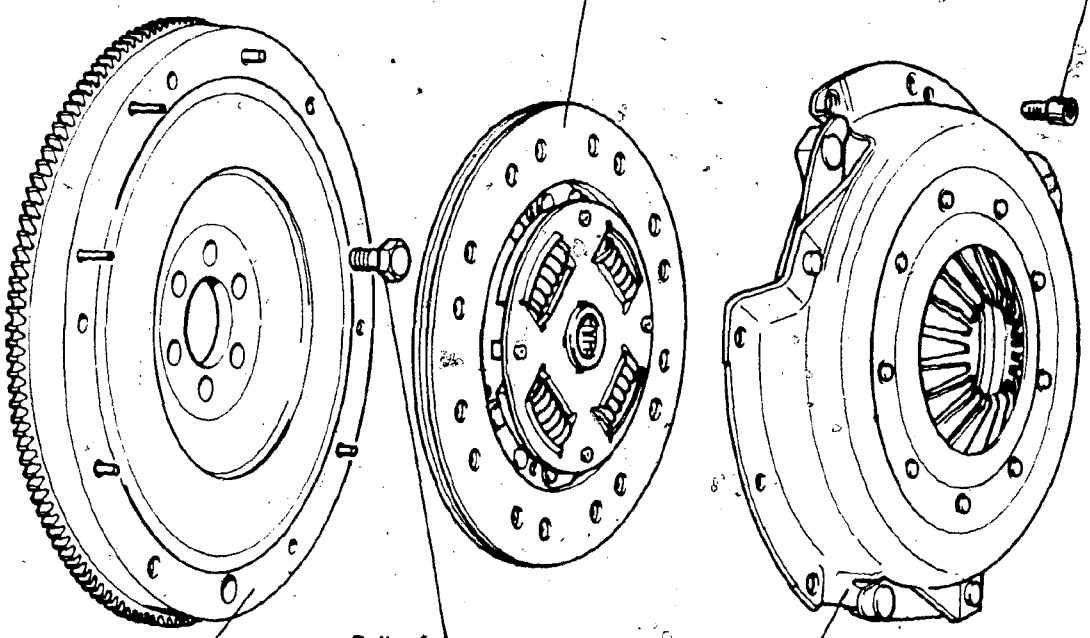

Clutch disc
- centering, page 30.9
- checking runout, page 30.10
- spring cage faces pressure plate

25 Nm (18 ft lb)

Bolt
100 Nm (73 ft lb)
- always replace
- install with locking compound, Part No. **D 000 600**

Flywheel
- check dowel pins for wear/tightness
- clutch lining contact surface must be free of grooves, oil and grease
- use tool **10-201** for removing/installing

Pressure plate
removing installing, page 30.7
checking, page 30.7

CAUTION

Clutch discs and pressure plates with damaged or loose rivets should be replaced.

30-291

cardiagn.com

Clutch pressure plate, replacing/checking

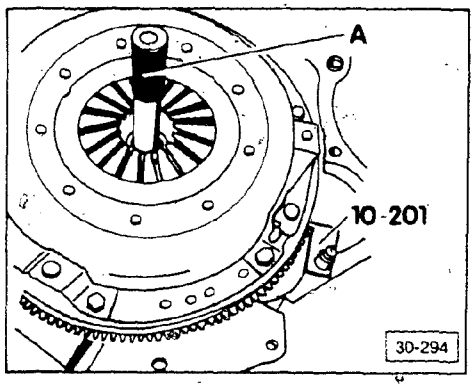

Replacing

- lock flywheel in position
- loosen/tighten bolts evenly and diagonally
  - use pilot tool **A** = **3176**

Note

Reposition holder **10-201** during tightening sequence.

> **CAUTION**
>
> Pressure plate must make complete contact with flywheel before installing the mounting bolts.
>
> Never force pressure plate. Dowel pins/holes could become distorted.

Checking

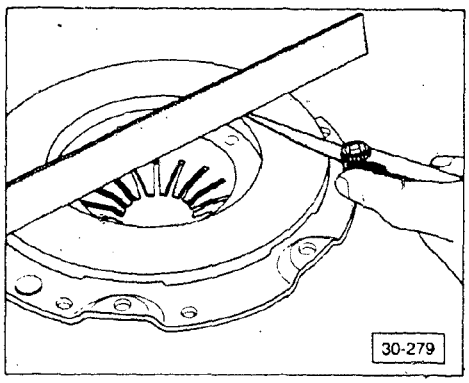

- check for cracks, burn marks and wear
  - maximum inward taper: 0.3 mm (0.001 in.)
- check lining and splines for wear, and check rivets for tightness

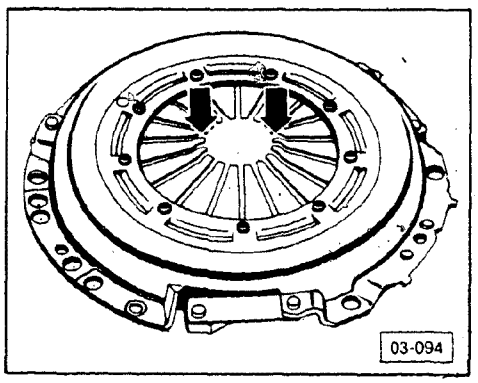

- checks ends of diaphragm spring (**arrows**)
  - maximum wear allowed: up to half of spring

> **CAUTION**
>
> Select replacement clutch pressure plate and disc using parts catalog along with engine code letters and engine numbers.

cardiagn.com

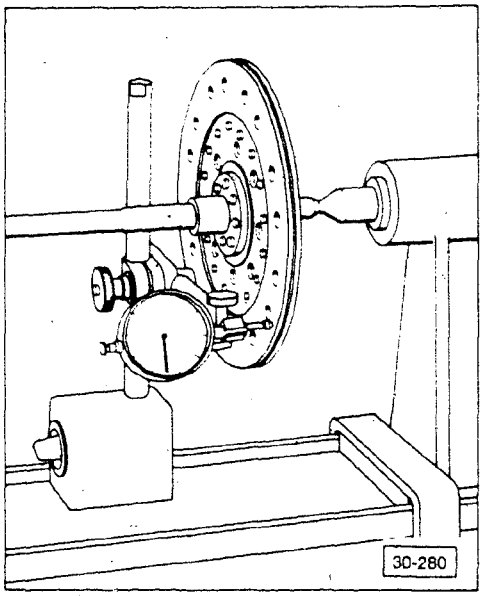

Clutch disc, checking runout

- maximum 0.5 mm (0.019 in.) measured 2.5 mm from outer edge

CAUTION

Select replacement clutch disc and pressure plate using parts catalog along with engine code letters and engine numbers.

cardiagn.com

Complaint	Possible cause	Corrective action
Clutch pedal does not return to original position (hydraulic clutch)	Air in hydraulic system, brake fluid level too low	Replenish brake fluid; bleed hydraulic system
	Piston seizes in master or slave cylinder	Replace defective part; bleed hydraulic system
	Hydraulic system, or master and slave cylinder leaking	
(mechanical clutch)	Clutch cable hard to operate	Replace clutch cable
	Self-adjusting mechanism (if equipped) defective	Replace clutch cable
(all vehicles)	Return spring (if equipped) defective	Replace return spring
	Clutch pedal hard to operate	Clean pivot points, lubricate. If necessary, replace bushing
	Linkage on transmission hard to operate	Clean pivot points, lubricate. Make necessary repairs
	Mechanical components in clutch housing binding or dragging	Clean pivot points, lubricate. Make necessary repairs
	Clutch release bearing twisted on guide sleeve, seized	Replace guide sleeve and clutch release bearing
	Diaphragm spring of pressure plate broken	Replace pressure plate
Excessively hard clutch pedal (mechanical clutch)	Clutch cable binds or drags. Cable corroded in guide. Self-adjusting mechanism defective (if equipped)	Replace clutch cable
	Linkage on transmission binding or dragging	Clean pivot points, lubricate. Replace bushing
(manual transmission — 020 only)	Pushrod and pressure plate bind or drag	Lubricate contact points lightly with **G 000 100** Lightly lubricate clutch pushrod
(all vehicles)	Clutch pedal binding or dragging **Note:** Prior to checking, disconnect master cylinder and/or clutch cable from clutch pedal	Clean pivot points, lubricate. If necessary, replace bushing
	Over-center spring action drags or binds. Over-center spring defective	Clean pivot points, lubricate. If necessary, replace over-center spring
	Return springs (if equipped) too strong/wrong return spring	Replace with correct return spring

cardiagn.com

Complaint	Possible cause	Corrective action
Excessively hard clutch pedal (all vehicles) — continued	Clutch release force increased due to wear of clutch linings	Inform customer: release force becomes higher with increasing wear Replace clutch disc if lining/rivet distance is below 0.1 mm
	Mechanical components in clutch housing bind or drag	Clean pivot points, lubricate. If necessary, replace pivot bushings
	Release bearing twisted on guide sleeve, seized	Replace defective parts
	Contact surface release bearing/release lever worn	Replace defective parts
	Pressure plate with wrong spring	Replace with correct part no.
	Clutch disc binds or drags on gears	Check gears of hub for defects (burrs). If necessary, replace clutch disc Clean corrosion and lubricant from gears of hub and input shaft. Lubricate input shaft splines with extremely light coating of grease, **G 000 100**. Move clutch disc back and forth; remove surplus grease

cardiagn.com

Complaint	Possible cause	Corrective action
Noises during clutch operation (mechanical clutch)	Transmission noises enter passenger compartment via clutch cable	Replace or add insulating components as necessary
	Clutch cable creaks, binds or drags	Replace clutch cable
	On full pedal application, diaphragm spring rubs against clutch disc (insufficient clutch free play)	Adjust clutch free play
	Self-adjusting mechanism (if equipped) defective	Replace clutch cable
	Release plate contact points and diaphragm spring need lubricating	Lightly grease contact points with **G 000 100**. Replace worn parts.
(manual transmission — 020 only)	Contact points, pushrod, release plate need lubricating	Lightly grease contact points with **G 000 100**
(all vehicles)	Clutch pedal binds or drags/ pivot points misaligned	Clean pivot points, lubricate. If necessary, replace bushing
	Pivot of over-center spring dry, dragging, misaligned	
	Return spring (if equipped) noisy	Lubricate pivot points
	Release bearing or release bearing guide defective, contact surface worn (shrunk?)	Generally, replace noisy release bearing. Replace damaged guide sleeves
	Contact surface (diaphragm spring tips) of pressure plate defective (bent, broken). Release bearing off-center in contact area	Replace pressure plate. Check release bearing and guide sleeve; replace if necessary. Check adaptor sleeves.
	Pilot bearing (if equipped) in crankshaft defective, engine/ transmission offset from center	Replace, lubricate with MoS_2 grease. Check adaptor sleeves
	Clutch disc installed improperly	Correct installation
	Wrong clutch disc installed	Replace with correct clutch disc

cardiagn.com

Complaint	Possible cause	Corrective action
Grinding noises when engaging a forward or the reverse gear, shift mechanism binds, drags; shifting not possible, clutch inoperative (hydraulic clutch)	Brake fluid level too low	Check system. Replenish brake fluid, bleed system
	Air in system; clutch does not disengage completely	
	Master/slave cylinder leaking, aged, line is too elastic	Replace defective part. Replenish brake fluid, bleed system
	Adjustment of clevis not correct	Correct adjustment
(mechanical clutch)	Mechanical components misaligned	Replace mechanical components
	Clutch free play excessive	Check clutch free play, adjust if necessary
	Wrong clutch cable installed (too long)	Replace with correct clutch cable
	Clutch cable defective; binds or drags	Replace clutch cable
	Self-adjusting mechanism (if equipped) defective	
(manual transmission — 020 only)	Pushrod too short due to wear	Replace pushrod, check release bearing. Lightly lubricate pushrod/release bearing contact points with **G 000 100** grease
(all vehicles)	Clutch pedal travel insufficient (carpet, floor mat beneath pedal). Clutch not being fully depressed	Inform customer
	Only reverse gear grinds when engaged	Inform customer. Depending on clutch diameter, wait approximately 3-6 seconds after depressing clutch before engaging reverse gear. Input shaft with clutch disc must first come to a stop
	Adjustment of shifting mechanism	Check, correct if necessary
	Bearing for shift lever and shift operation not lubricated; misaligned	Lubricate shift mechanism, replace defective parts

cardiagn.com

Complaint	Possible cause	Corrective action
Grinding noises when engaging a forward or the reverse gear, shift mechanism binds, drags; shifting not possible, clutch inoperative (all vehicles) — continued	Clutch disc binds or drags on gears. Hub corroded, or was damaged during installation. Hub misaligned on one side	Check gears of hub for damage, replace clutch disc if necessary. Remove corrosion and grease residue from hub and shaft. Grease input shaft splines with extremely light coating of **G 000 100**. Move clutch disc back and forth; remove surplus grease. When hub is misaligned, check position of adaptor sleeves. Check release bearing, guide sleeve, pressure plate and pilot bearing. Replace if necessary
	Pressure plate lift-off too slight (wrong pressure plate installed)	Replace with correct pressure plate
	Pilot bearing on crankshaft defective. Input shaft still driven when clutch disengaged	Replace pilot bearing and lubricate with MoS_2. Check adaptor sleeves. Replace if necessary. Check shaft
	Engine/transmission offset too large (adaptor sleeves missing), thus support plate of clutch disc bent	Install adaptor sleeves prior to transmission installation. Check clutch disc, pressure plate and pilot bearing (if equipped) for damage; replace if necessary
	Pilot bearing in crankshaft defective	
	Lining worn due to excessive rpms: down-shifting at too fast a speed	Replace clutch disc; inform customer
	Lining worn from riding the clutch when accelerating	
	Synchronizing system and/or shifting mechanism in transmission defective	Repair transmission

cardiagn.com

Complaint	Possible cause	Corrective action
Grinding noises when engaging a forward or the reverse gear, shift mechanism binds, drags; shifting not possible, clutch inoperative (all vehicles) — continued	Pressure plate uneven due to wrong installation. Clutch disc distorted due to improper handling	Check parts, replace if necessary. Observe position of locating pins If grinding occurs thereafter, check splines on clutch disc hub and shaft for ease of operation, check pilot bearing (if equipped) in crankshaft. If necessary, repair transmission
	2nd gear grinds only when cold	Inform customer. If necessary, replace transmission oil with oil of different viscosity (see specs/ procedures in this manual)
	Diaphragm spring tips broken or bent (installation error: release bearing runs off center)	Replace pressure plate. Check guide sleeve; replace if necessary. Check adaptor sleeves
	Clutch disc too thick	Replace with correct clutch disc
	Lining rusted onto flywheel (long periods of disuse, high relative humidity)	Lightly sand friction surfaces. Replace parts when corrosion is severe

cardiagn.com

Complaint	Possible cause	Corrective action
Clutch slips; little or no clutch action (hydraulic clutch)	Master/slave cylinder piston does not return to rest position.	Replace master/slave cylinder. Change brake fluid, bleed system.
(mechanical clutch)	Clutch cable improperly adjusted (insufficient clutch free play). Wrong clutch cable	Correct adjustment. Replace with correct cable, if necessary
	Self-adjusting mechanism (if equipped) defective	Replace clutch cable, if necessary
	Clutch cable binds or drags	Replace clutch cable, if necessary
(manual transmission — 020 only)	Clutch release pushrod oil seal in input shaft leaks	Replace oil seal, clutch disc. Clean pressure plate and flywheel
(all vehicles)	Wrong clutch disc, wrong pressure plate installed	Replace with correct clutch disc or pressure plate
	Clutch disc worn, burnt pressure plate, overheated grooves, pressure plate distorted due to wrong installation, pressing force of pressure plate too low. Driving errors, normal wear	Replace clutch disc, pressure plate. Instruct customer
	Mechanical components of transmission drag, pedal linkage binds	Clean pivot points, lubricate; repair if necessary
	Clutch disc, pressure plate, flywheel oil-contaminated. Crankshaft oil seal defective. Grease on contact surfaces from over-lubrication of hub	Replace clutch disc. Clean contact surfaces of pressure plate and flywheel. Replace crankshaft oil seal, remove surplus grease from input shaft
	Clutch disc installed from wrong side	Correct installation. Check clutch disc; replace if necessary
	Flywheel too thick; excessive wear on contact surfaces	Replace with correct flywheel. Check disc and pressure plate; replace if necessary

cardiagn.com

Complaint	Possible cause	Corrective action
Clutch pulls, power train rattles (hydraulic clutch)	Adjustment on clevis not correct	Correct adjustment
	Air in the system; master cylinder/slave cylinder defective	Replace defective part. Check brake fluid level, bleed system, check for leaks
(mechanical clutch)	Master cylinder/slave cylinder pushrod does not return to rest position	Replace defective part. Change brake fluid, if necessary. Bleed system
	Clutch cable binding	Replace clutch cable
	Clutch pedal binding **Note:** Prior to checking, disconnect clutch pedal from clutch cable.	Clean pivot points, lubricate if necessary. Replace bushing if necessary
	Linkage on transmission binds or drags	Clean pivot points, lubricate. Replace bushing if necessary
(all vehicles)	Engine runs unevenly	Check engine adjustment; correct if necessary
	Driving errors: acceleration rpm too low	Instruct customer
	Wrong clutch disc installed	Replace with correct clutch disc
Noises in idle (manual transmission — 020 only)	Clutch lining, contact surface of pressure plate and flywheel oil-contaminated (oil seeps out of clutch housing)	Check clutch release pushrod oil seal; replace if necessary. Replace clutch disc; clean pressure plate and flywheel
(all vehicles)	Torsion spring broken	Replace clutch disc
	Clutch disc installed without spring cage (rattling in idle)	Install clutch disc with spring cage
	Pressure plate distorted, broken, out-of-round	Replace pressure plate
	Engine runs unevenly	Check engine adjustment; correct if necessary

cardiagn.com

Complaint	Possible cause	Corrective action
Noises in idle (all vehicles) — continued	Engine mounts are too "soft"; misaligned	Check contact points. Replace if necessary, with correct engine mounts
	Shock absorbers defective	Replace shock absorbers
	Clutch lining, contact surface of pressure plate and flywheel oil-contaminated	Locate cause of contamination; repair as necessary. Replace clutch disc; clean pressure plate and flywheel
	Release bearing twisted on guide sleeve, seized (presses from one side on diaphragm spring of the pressure plate)	Replace release bearing and guide sleeve. Check mechanical components and pivot points
	Contact surface of pressure plate has lift on one side only, due to twisted release bearing	Check contact surface for clutch lining on flywheel pressure plate and diaphragm spring; if necessary replace pressure plate. Replace release bearing and guide sleeve.
	Housing of pressure plate warped during assembly. Contact surface of pressure plate has lift on one side only	
	Input shaft greased excessively (traces of grease on clutch disc, pressure plate and flywheel)	Clean grease from pressure plate and flywheel. Replace if damaged (i.e., scoring, signs of overheating, grooves). Remove all lubricant from hub and input shaft, lubricate input shaft lightly with **G 000 100**. Move clutch disc back and forth; remove excess grease.

cardiagn.com

Index

Bearing outer race
- removing/installing 34.19

Breather sleeve
- installing 34.17

Differential lock control unit
removing/installing 34.11

Drive flange
- circlip 34.18
- removing 34.17

Fifth/reverse gear lock
assembling 34.19
installation position 34.19

Final drive housing
- assembly 34.15
- bearings 34.16
modification
(for 20V engine) 34.9

Inner shift rod
- and relay shaft, installing 34.22
- oil seal, replacing 34.22

Main shaft
- assembly 34.20

Multi-function sender
- installing 34.17

Oil collector
- removing/installing 34.22

Relay shaft bolts
- removing 34.21

Selector shaft bushing
- removing 34.21

Shift fork bearing
- removing/installing 34.22

Shift mechanism
- installation position 34.21

Shift rod bushing
- removing 34.17

Technical data
★ ■ chart 34.3

Transmission
- assembling/disassembling 34.13
removing/installing 34.7

Vacuum operations for differential lock
assembly 34.10
hose layout 34.12

Cap
- removing 34.25

Center differential/final drive
- assembly 34.23
- bearings 34.24
- installing 34.26

Drive flange
- removing 34.25

Main shaft ball bearing
- installing 34.27

Needle bearing
- removing/installing 34.25

Oil drilling in main shaft
- deleted 34.27

★ NEW INFORMATION since last filming

cardiagn.com

This page intentionally left blank

cardiagn.com

Technical data, 5-speed transmission 01A

Note

For location of transmission codes, see Group 00.

Code		AKT	AKU	AXL
Production	from	06/87	06/87	09/90
	to		09/90	
Application	type	Audi 80 Quattro	Audi 80 Quattro/Audi 90 Quattro	
	engine	2.0 liter - 83 kW	2.3 liter - 101 kW	
Rear final drive		AEX	AEC/ARS	
Ratio	final drive	41:09 = 4.556	37:09 = 4.111	
	1st gear	39:11 = 3.545	39:11 = 3.545	
	2nd gear	40:19 = 2.105	40:19 = 2.105	
	3rd gear	39:30 = 1.300	39:30 = 1.300	
	4th gear	32:36 = 0.889	33:35 = 0.943	
	5th gear	29:40 = 0.725	30:39 = 0.769	
	reverse gear	35:10 = 3.500	35:10 = 3.500	
Speedometer		electric		
Lubricant capacity		2.85 liters (3.0 US qt)		
Lubricant type		Transmission oil G 50 (synthetic oil) SAE 75 W 90		
Clutch actuation		hydraulic		
Clutch disc diameter		228 mm	228 mm	
Drive flange diameter		100 mm	100 mm	
Speed in highest gear at 1000 RPM		33.63 km/h (20.9 mph)	34.17 km/h (21.2 mph)	

cardiagn.com

Technical data, 5-speed transmission 01A

Note

For location of transmission codes, see Group 00.

Code		ASZ	AXM	AKU	AXL
Production	from	11/88	10/90	07/86	10/90
	to	10/90		10/90	
Application	type	Coupe Quattro		Audi 90 Quattro 20V	
	engine	20 valve 2.3 liter - 125 kW		20 valve 2.3 liter - 125 kW	
Rear final drive		AEC, ARS		AEC, ARS	
Ratio	final drive	37:09 = 4.111		37:09 = 4.111	
	1st gear	39:11 = 3.545		39:11 = 3.545	
	2nd gear	40:19 = 2.105		40:19 = 2.105	
	3rd gear	40:28 = 1.429		39:30 = 1.300	
	4th gear	35:34 = 1.029		33:35 = 0.943	
	5th gear	31:37 = 0.0838		30:39 = 0.769	
	reverse gear	35:10 = 3.500		35:10 = 3.500	
Speedometer		electric			
Lubricant capacity		2.85 liters (3.0 US qt)			
Lubricant type		Transmission oil G 50 (synthetic oil) SAE 75 W 90			
Clutch actuation		hydraulic			
Clutch disc diameter		240 mm		228 mm	
Drive flange diameter		100 mm		100 mm	
Speed in highest gear at 1000 RPM		33 km/h (20.5 mph)		35 km/h (21.7 mph)	

cardiagn.com

This page intentionally left blank

cardiagn.com

This page intentionally left blank

cardiagn.com

Transmission, removing/installing

Removing

- disconnect battery ground strap
- remove 3 upper engine/transmission bolts
- disconnect ground strap from transmission

- remove wiring connectors for speedometer sender and multi-function sender
- disconnect wiring for oxygen sensor and oxygen sensor heating element
- remove engine protection plate

- disconnect exhaust pipe from manifold
- separate exhaust pipe behind catalyst and remove pipe and catalyst
- remove drive shaft

- remove rear cross member
- remove shift rod securing bolt at transmission and let shift rod hang
- remove transmission cover plate

- remove right axle shaft shield
- disconnect left and right axle shafts, turn steering to right lock and tie both drive shafts up
- remove clutch slave cylinder

- remove tie rod coupling from steering rack and turn wheels to the left
- support engine with **10-222A**
- support transmission with **VW 1383**

- remove transmission strut at left rear and front engine mount
- remove heat shield from bonded rubber bushing
- remove bonded rubber bushing support bracket from transmission

- remove bonded rubber bushing
- remove bolt for seat belt tensioning cable guide at left rear of transmission. Position cables and guide out of way
- lower right rear subframe by loosening mounting bolts (**arrow**)

- remove remaining engine/transmission bolts
- remove transmission

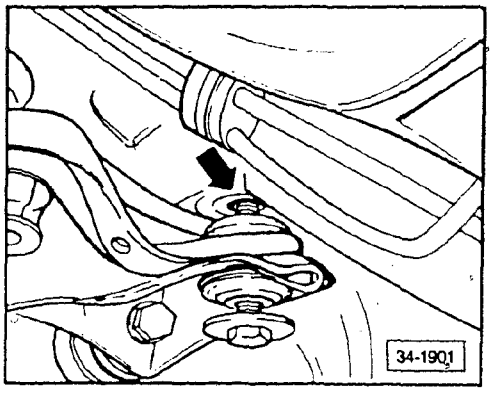

cardiagn.com

Installing

Proceed in reverse order of removal and note the following:

- press clutch master cylinder in with a lever until retaining bolt can be installed

Note

Be sure that centering (dowel) sleeves are in cylinder block before reassembly.

Tightening torques

Transmission to engine	
M 8 bolts	25 Nm (18 ft lb)
M 10 bolts	45 Nm (33 ft lb)
M 12 bolts	65 Nm (48 ft lb)
Drive shaft to flange	
M 8 bolts	45 Nm (33 ft lb)
Subframe mounting bolts	
M 10 bolts	35 Nm (25 ft lb)
after tightening, turn 90° (1/4 turn) more	
Drive shaft to transmission and final drive	
M 8 bolts	55 Nm (40 ft lb)
Tie rod coupling bolts to steering rack	
45 Nm (33 ft lb)	

Mounting transmission to engine

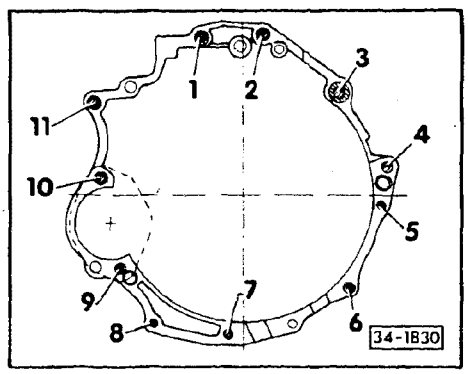

1— Bolt M 12 x 70
2— Bolt M 12 x 70
3— Bolt M 12 x 90
4— Bolt M 12 x 80
5— Bolt M 8 x 40
6— Bolt M 10 x 50
7— Bolt M 10 x 40
8— Bolt M 8 x 40
9— Bolt M 10 x 120
10— Bolt M 12 x 100
11— Bolt M 12 x 70

Centering (dowel) sleeves:
positions **3** and **11**

cardiagn.com

Final drive housing, modification (vehicles with 20 valve engine)

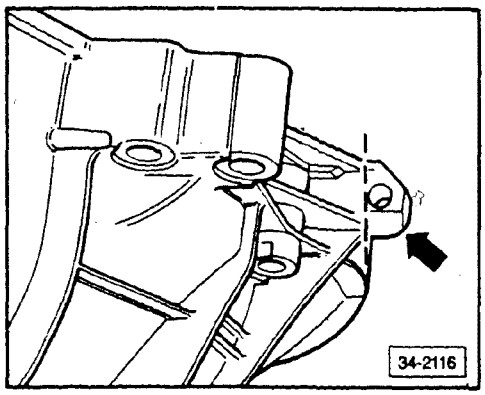

If during repairs the final drive housing is replaced, the right side mounting eye must be removed.

- saw off eye (**arrow**) as indicated by dotted line in illustration

CAUTION

Mounting eye will contact exhaust system unless removed before installing transmission.

cardiagn.com

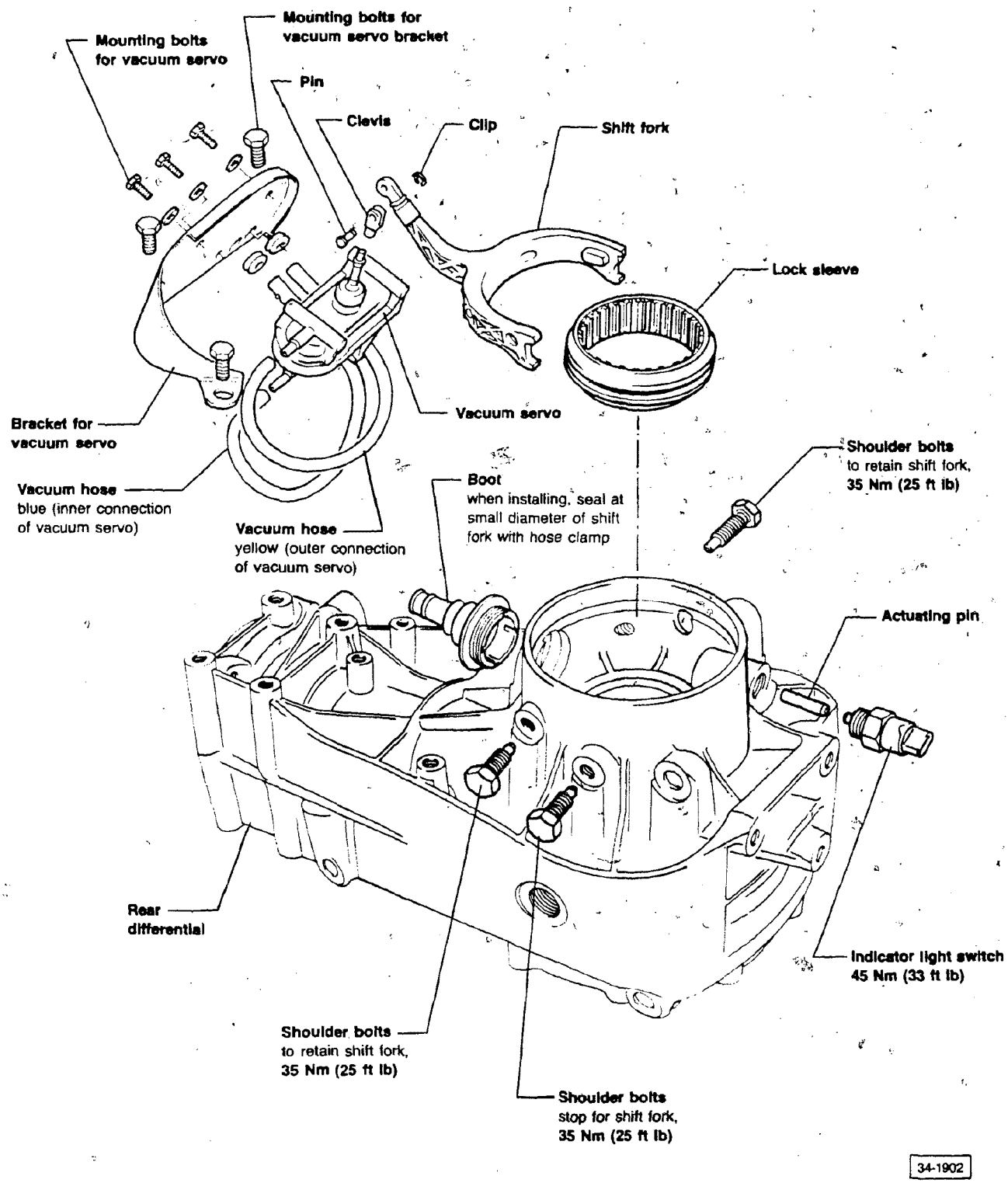

cardiagn.com

Differential lock control unit, removing/installing

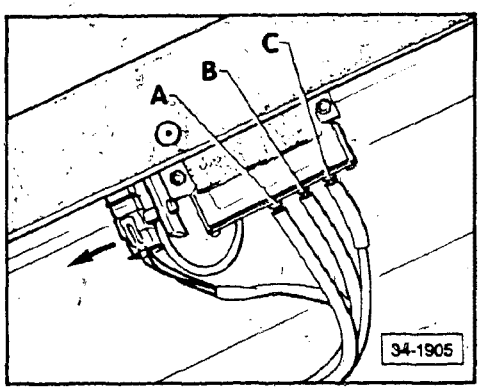

Removing

Note

For repair of system electrical components, refer to wiring diagrams and troubleshooting information in Repair Group 97.

- remove vacuum hoses
  - **A** blue = to lock servo
  - **B** yellow = to lock servo vacuum element
  - **C** violet = from intake manifold
- remove wiring connector from control unit (**arrow**)
- remove control unit mounting screws

Installing

- to install the control unit, proceed in reverse order of removal

cardiagn.com

Hose layout for differential lock

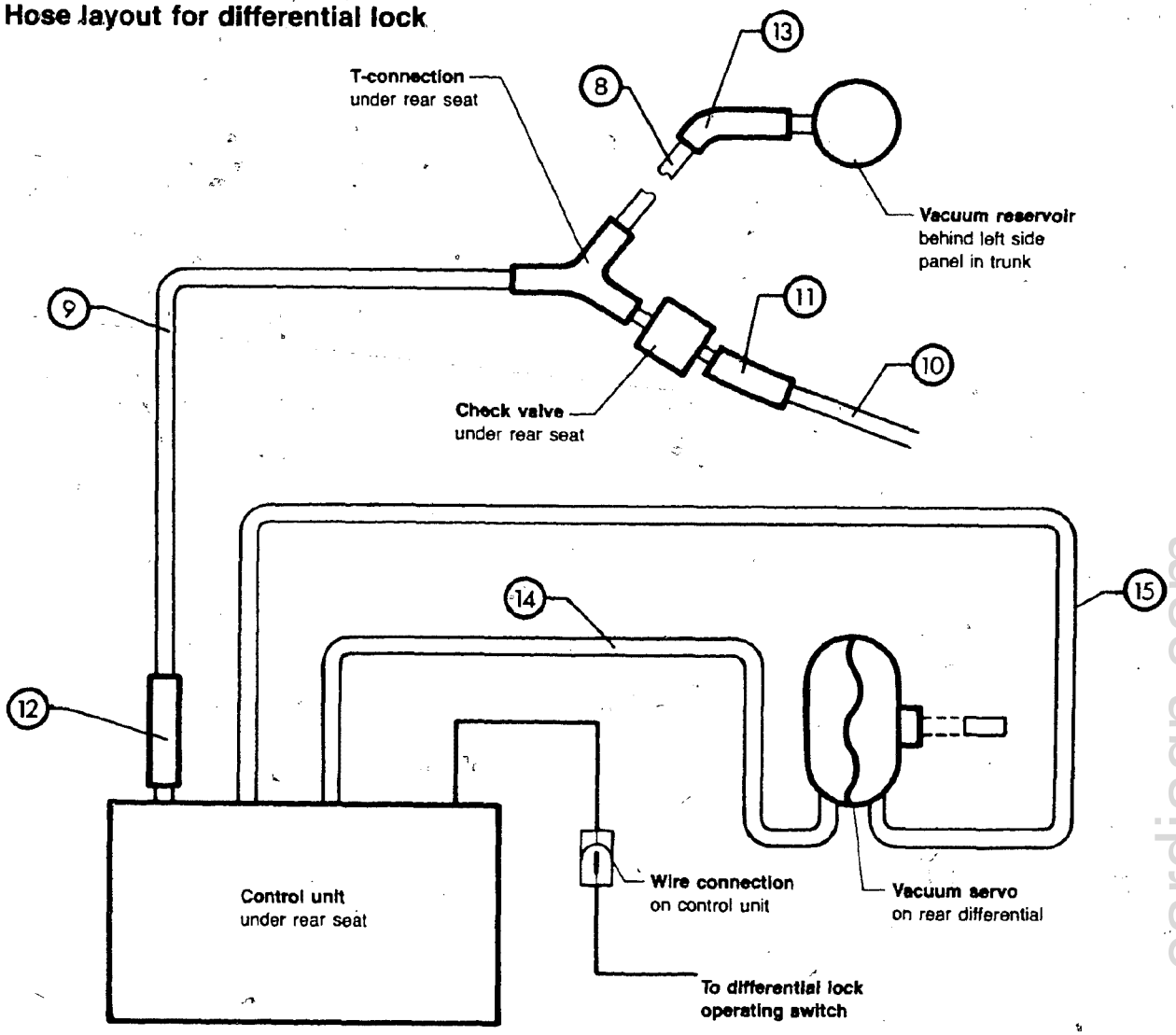

	Length (mm)	Color	
8 9 10	1020 815 2970	white violet violet	tubes 4 x 1 (to intake manifold)
11 12 13	45 100 390	black black black	hoses 3.5 x 2
14 15	900 900	blue yellow	hoses 3.5 x 2.25

cardiagn.com

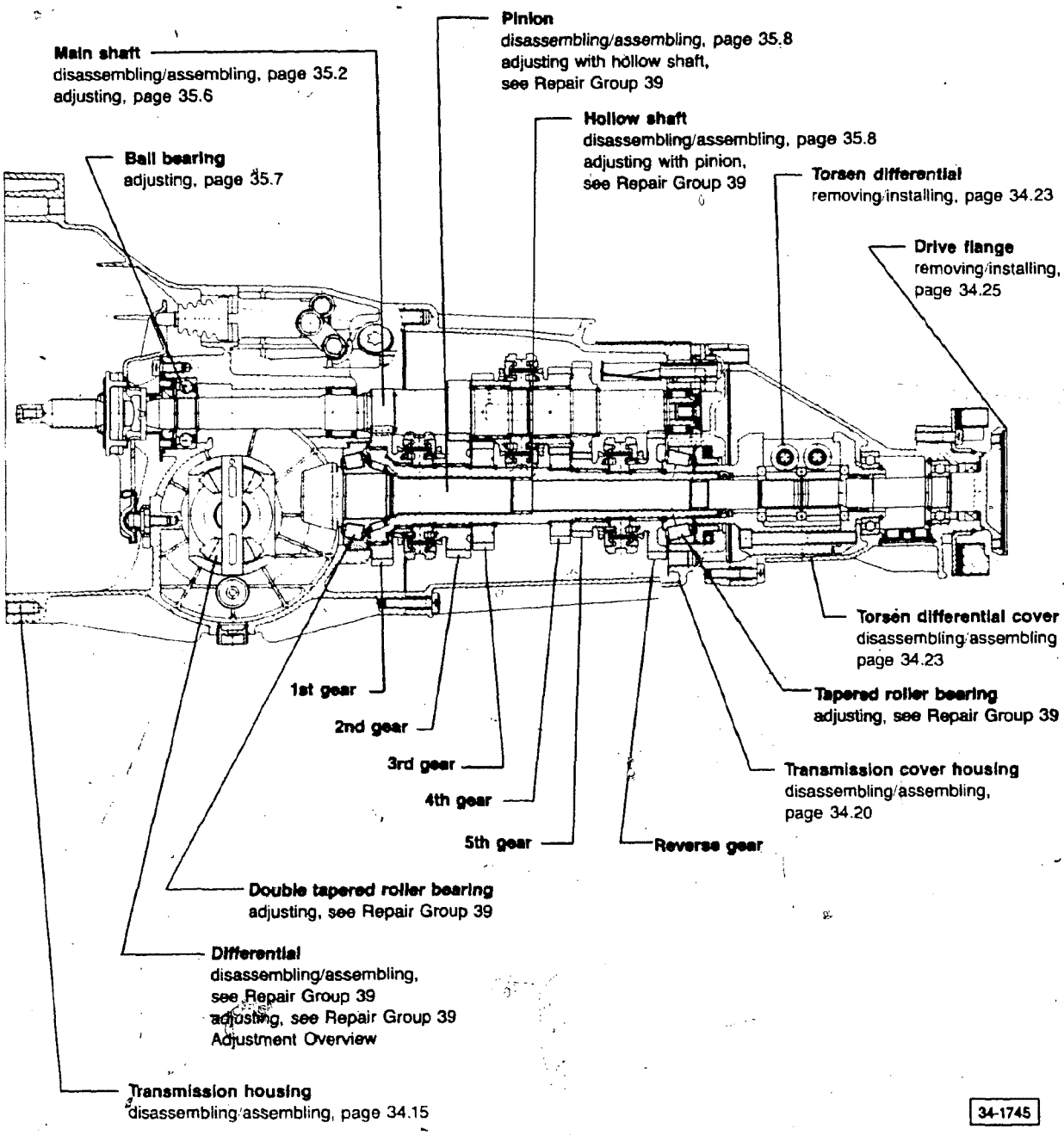

cardiagn.com

Transmission, disassembling/ assembling

Disassembling

- clamp transmission in assembly stand, page 34.16
- drain transmission oil
- remove clutch return lever and clutch release bearing
- remove guide sleeve
- remove and measure thickness of circlip in front of ball bearing
- pull ball bearing out of transmission housing using puller, page 34.16
- remove and measure thickness of circlip behind ball bearing
- remove bolts between gear carrier housing/ cover (for Torsen differential) and remove cover with Torsen differential
- remove bolts between transmission housing/gear carrier housing and take off gear carrier housing
- remove multi-function sender
- remove relay shaft bolts, page 34.21
- remove locking segment bolt and take locking segment out
- remove main shaft, pinion, relay shaft, selector rods and shift forks together

Assembling

Assemble in reverse order of procedure shown above and note the following:

- main shaft, pinion with hollow shaft, relay shaft, selector rods and shift forks must be installed together, page 34.21
- circlips for main shaft at ball bearing must be replaced in the same position and be of the same thickness

cardiagn.com

Note

Before installing gear carrier housing, make sure that the centering sleeves are mounted in transmission housing.

Note

Handle speedometer sender carefully. Do not let it fall, otherwise speedometer data may not be exact.

Transmission housing
clamp transmission in assembly stand Fig. 1
remove sealing ring for drive flange with **VW 681**,
drive in 5 mm under transmission housing surface with **VW 195**
note breather insertion depth Fig. 5
tapered roller bearing outer race, removing Fig. 12
drive in with **30-205** selector rod bushing, removing Fig. 6 seal with **AMV 188 200 03**

Circlip
mark after removing
measuring, page 35.5

Guide sleeve with sealing ring
sealing ring, removing/installing, see Repair Group 30

35 Nm (26 ft lb)

Concave washer
small diameter faces guide sleeve (convex side)

Main shaft ball bearing
pullout out of transmission housing Fig. 2
installing Fig. 3, also see page 34.27

10 Nm (7 ft lb)

Speedometer sender

Differential
can be removed with gear carrier housing installed
disassembling/assembling, see Repair Group 39

Sealing ring

Drive flange
removing Fig. 7
drive in with **VW 295**

Circlip
always replace

25 Nm (18 ft lb)

Final drive cover
tapered roller bearing outer race, removing/installing Figs. 9 and 10
pull sealing ring out with **VW 681**
installing Fig. 11
seal with **AMV 188 200 03**

Multi-function sender
installing Fig. 4

Multi-function sender connector

Locking plate
for multi-function sender

25 Nm (18 ft lb)

Right drive flange
removing Fig. 7
drive in with **VW 295**

Circlip
always replace
removing/installing Fig. 8

5th/reverse gear lock
can be replaced with transmission installed
install beveled side of plastic bushing towards relay shaft bore
disassembling/assembling Fig. 13
installation position Fig. 14

Gear shift lever shaft cover

CAUTION

If transmission housing or tapered roller bearing for pinion or hollow shaft is to be replaced and the deviation *r* is not specified on the bevel gear, the position of the pinion must be determined before removal of the gear carrier housing (actual measurement), see Repair Group 39.

34-1818

cardiagn.com

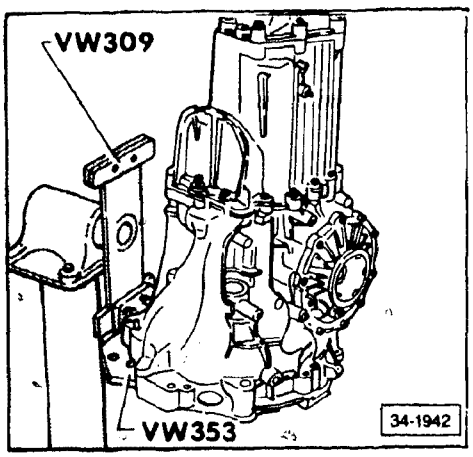

▶ **Fig. 1 Transmission, mounting in assembly stand**

Note

Mount transmission so that top of transmission faces **VW 309**. If holes do not align modify **VW 353**. This method of mounting makes measuring for **S1** and **S2** possible.

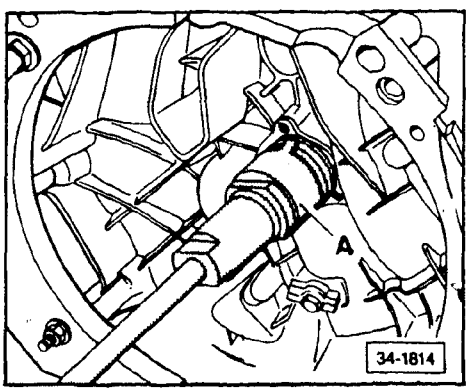

▶ **Fig. 2 Ball bearing, removing from housing**

- **A** — puller **VW 1528** and gripper **VW 1582/2**

Note

When installing puller do not damage the ball bearing cage.

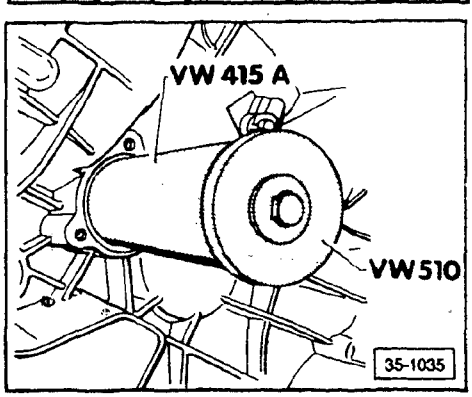

▶ **Fig. 3 Ball bearing, installing in housing**

- install circlip on main shaft
- pull main shaft into transmission housing and ball bearing with bolt
  - installation position: open side of plastic cage points towards guide sleeve

Beginning with transmission 21 07 9, the threaded hole in the main shaft, which is used for installing the ball bearing, is discontinued.

When installing the bearing in transmissions without the threaded hole, use tool **3235**. The procedure for removing the bearing is unchanged.

- install thrust pad **A** (part of tool **3235**) on bearing
- press bearing in by turning two bolts **B** alternately in stages

Note

The ends of bolts **B** must align with the two depressions in the thrust pad when pressing.

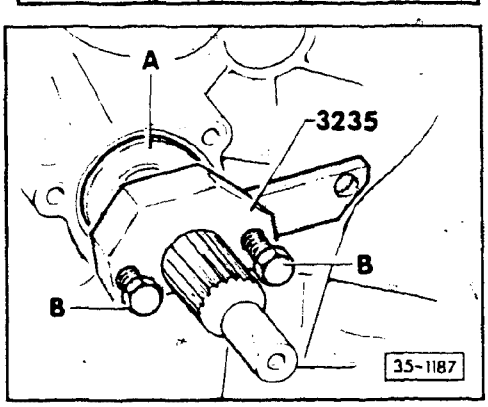

CAUTION

Turn each bolt ONLY a half turn at a time to prevent damage to the bearing.

cardiagn.com

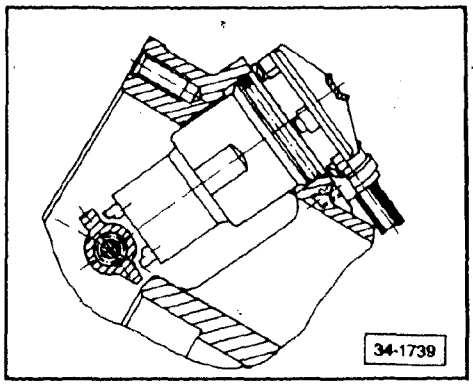

▶ **Fig. 4 Multi-function sender, installing**

- install lock ring to seal multi-function sender

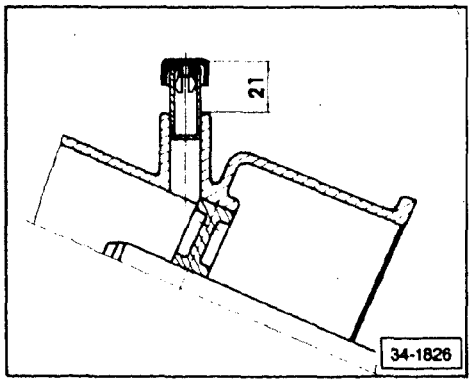

▶ **Fig. 5 Transmission breather sleeve, installing**

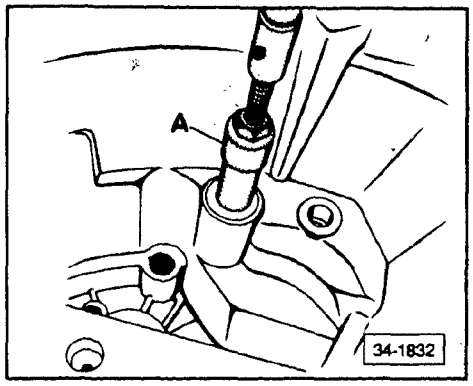

▶ **Fig. 6 Shift rod bushing, removing**

- with puller **A**, i.e. **Kukko 21/3** 18.5 mm - 23.5 mm

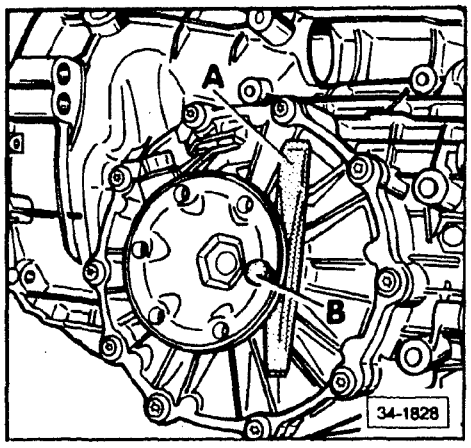

▶ **Fig. 7 Drive flange, removing**

- put chisel or spacer **A** under drive flange and pull drive flange out of differential gear by turning bolt **B**

cardiagn.com

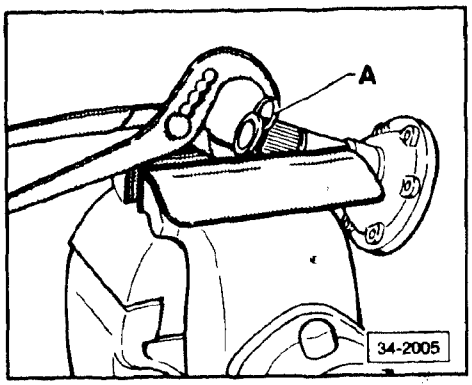

▶ **Fig. 8 Drive flange circlip, removing/installing**

- clamp drive flange in vise with protective jaw covers. Press circlip out of drive flange groove with new circlip **A**

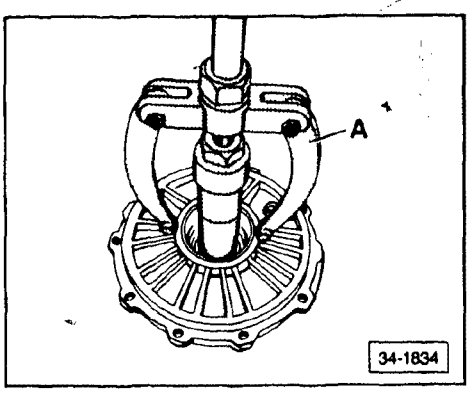

▶ **Fig. 9 Tapered roller bearing outer race in final drive cover, removing**

- with puller and holder **A**, i.e. **Kukko 21/7** = 46 mm - 56 mm and **Kukko 22/2**
- outer race can also be removed with **3138**

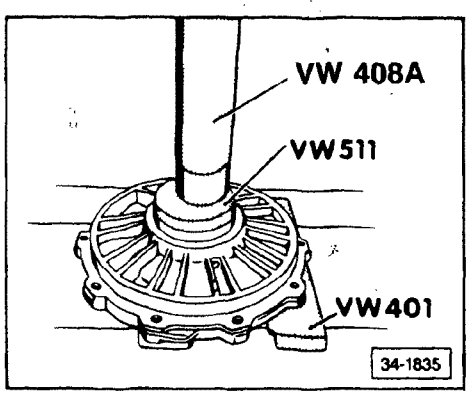

▶ **Fig. 10 Tapered roller bearing outer race for final drive cover, installing**

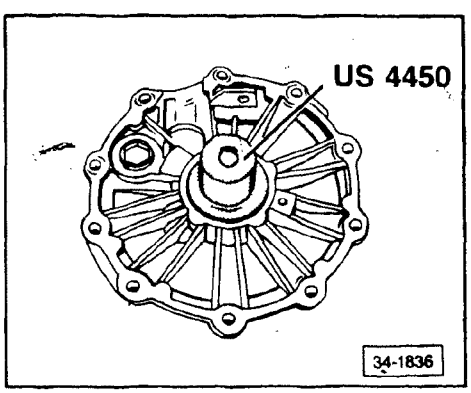

▶ **Fig. 11 Drive flange sealing ring, installing**

- drive sealing ring in 5 mm under cover upper edge

cardiagn.com

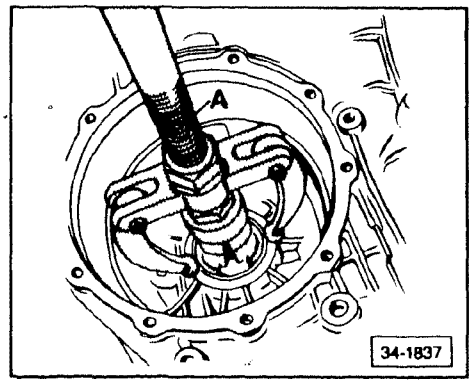

▶ **Fig. 12 Tapered roller bearing outer race in transmission housing, removing/installing**

- remove with puller and holder **A**, i.e.
  Kukko 21/7 = 46 mm - 56 mm and
  Kukko 22/2

Note

Install, using **30-205**

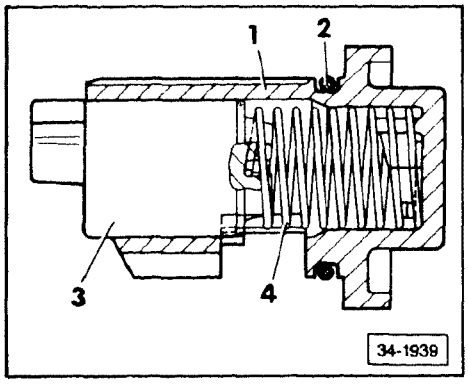

▶ **Fig. 13 5th and reverse gear lock, assembling**

- **1** - plastic bushing
- **2** - lock ring
- **3** - bushing with lock for 5th and R gear
- **4** - spring

Assembly instructions

- place spring **4** in plastic bushing **1**
- turn spring counterclockwise under light pressure until spring snaps in place in base of plastic part
- place bushing **3** on spring so that bent end of spring lies in groove
- press spring together using bushing **3**
  - approximately one turn counterclockwise (turn to left), until bushing tab **3** lies over the groove in plastic bushing
- press bushing tab **3** into groove in plastic bushing **1** to stop surface
- turn bushing **3** in clockwise direction (to the right) and release
  - bushing **3** springs into assembly end position

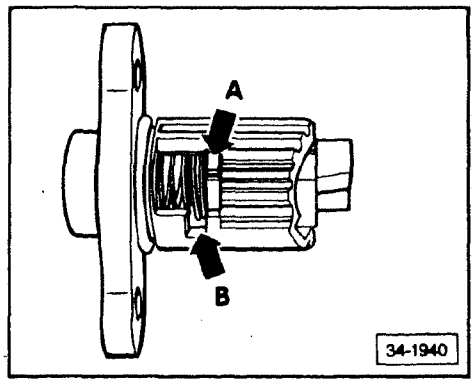

▶ **Fig. 14 5th/reverse gear lock, installation position**

- 5th/reverse gear bushing tab (**arrow A**) must always come to stop opposite groove (**arrow B**) on plastic bushing

Note

If there is any catching or hanging up in 5th or reverse gear after adjusting the shifting control, the 5th and reverse gear lock must first be removed, checked, and if necessary replaced, before removal and disassembly of the transmission.

cardiagn.com

3rd/4th gear selector shaft and shift fork
position of selector shaft Fig. 2
selector shaft or shift fork can be replaced individually
selector shaft bushing, removing Fig. 4
driving in with **VW 295** and **VW 295 a**
replace selector shaft bearing if worn
installing Fig. 3

Main shaft
disassembling/assembling, page 35 2
adjusting, page 35.6
installing Fig. 3

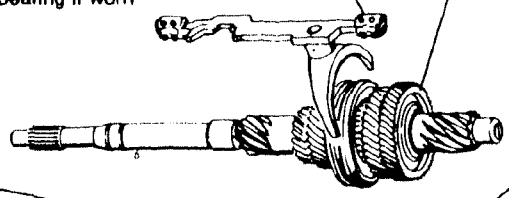

Circlip

Thrust washer

Relay shaft

40 Nm (30 ft lb)
removing Fig. 1

Spacer

Spacer

Reverse gear needle bearing

Reverse gear

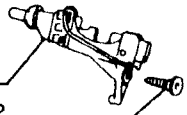

40 Nm (30 ft lb)
removing Fig. 1

Locking segment
installation position Fig. 2

25 Nm (18 ft lb)
with flange facing spring/locking segment safety mechanism

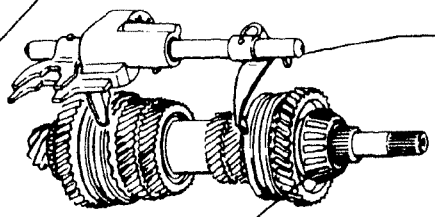

1st, 2nd, 5th and reverse gear selector shaft with shift fork
to disassemble/assemble, remove/install spring pins
1st/2nd gear shift fork bearing, removing/installing Fig. 5
1st/2nd gear shift fork can be replaced individually
replace 5th/reverse gear shift fork only together with selector ring and selector shaft

Inner shift rod
installation position Fig. 2
installing Fig. 3
pull shift rod sealing ring out with **VW 681** and drive in flush with **VW 431**

Pinion with hollow shaft
disassembly/assembly, page 35.8

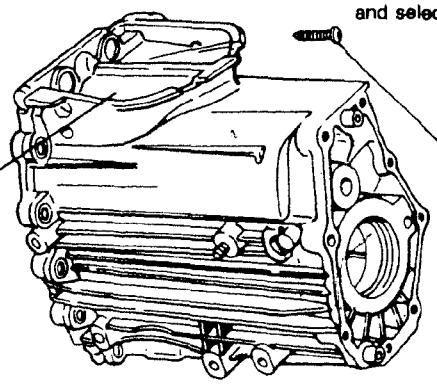

35 Nm (26 ft lb)
Torx screw for reverse gear selector shaft

Transmission cover housing
oil collector, removing installing Fig. 6

CAUTION

If transmission housing or tapered roller bearing for pinion or hollow shaft is to be replaced and the deviation r is not specified on the bevel gear, the position of the pinion must be determined before removal of the gear carrier housing (actual measurement), see Repair Group 39.

34-1928

cardiagn.com

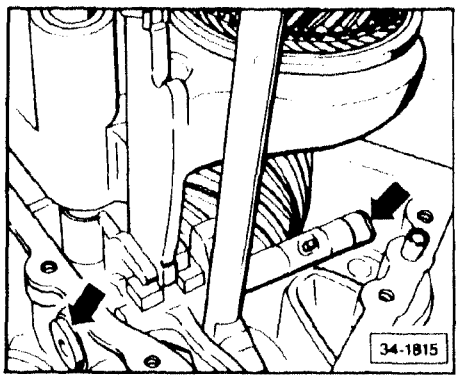

▶ **Fig. 1 Relay shaft bolts (arrows), removing**

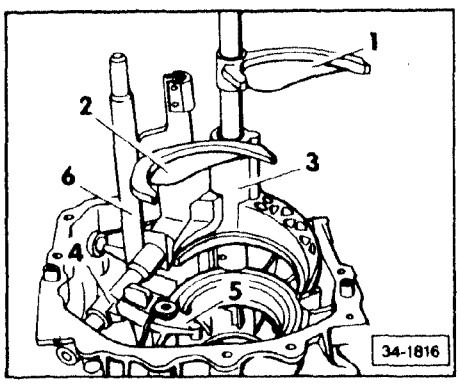

▶ **Fig. 2 Shift mechanism, installation position**

1 — 5th/reverse gear selector shaft with swinging fork
2 — 3rd/4th gear selector shaft
3 — 1st/2nd gear shift fork
4 — relay shaft
5 — locking segment
6 — shift rod

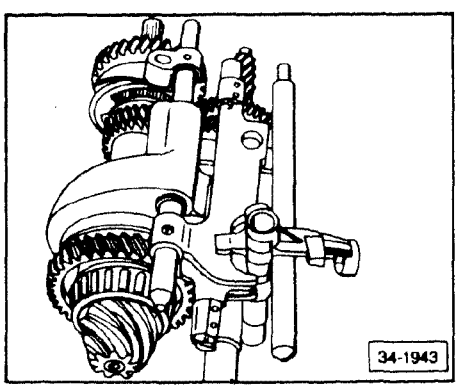

▶ **Fig. 3 Main shaft, pinion with hollow shaft, selector shafts and shift forks, installation position**

- these parts must be installed together

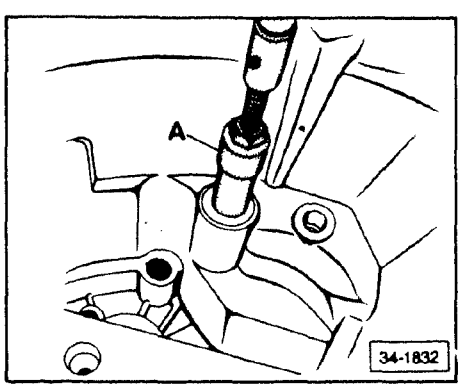

▶ **Fig. 4 Selector shaft bushing, removing**

- with puller **A**, i.e. **Kukko 21/3**
  18.5 mm - 23.5 mm

cardiagn.com

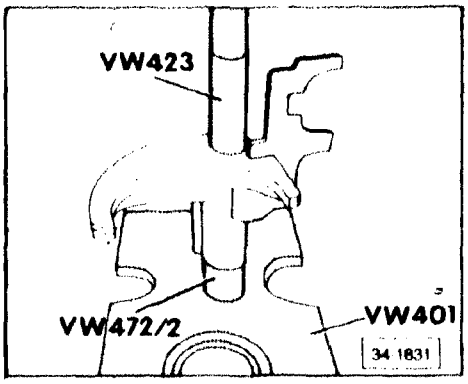

▶ **Fig. 5 Shift fork bearing, removing/installing**

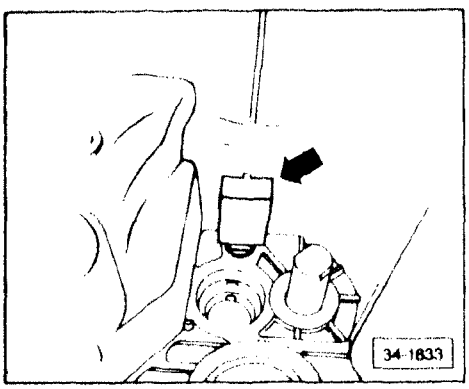

▶ **Fig. 6 Oil collector, removing/installing**

- pry out oil collector (**arrow**) with screwdriver
- push oil collector far enough into gear carrier housing that oil collector locking tab snaps into gear carrier housing
  - collector cup points upwards in gear carrier housing

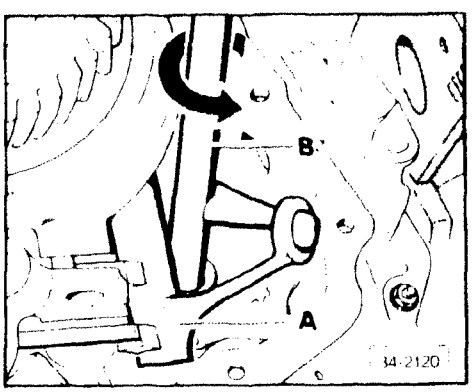

▶ **Fig. 7 Inner shift rod/relay shaft, installing**

After installing the main shaft, pinion shaft and selector shafts, the inner shift rod and relay shaft can be installed as follows

- engage 3rd gear
- install relay shaft **A**
- install inner shift rod **B** sideways in housing and join to relay lever eye
- rotate inner shift rod in direction of arrow

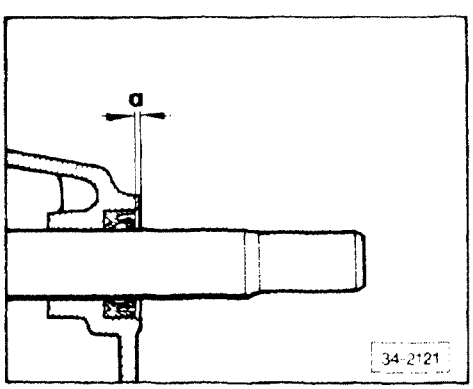

▶ **Fig. 8 Inner shift rod oil seal, replacing (transmission installed)**

- remove exhaust system as necessary
- remove shift rod
- pry out seal using small screwdriver
- install new seal with **VW 423**
  - installed position **a** 1.0 mm

cardiagn.com

CONTINUED IN THE

BEGINNING OF NEXT ROW

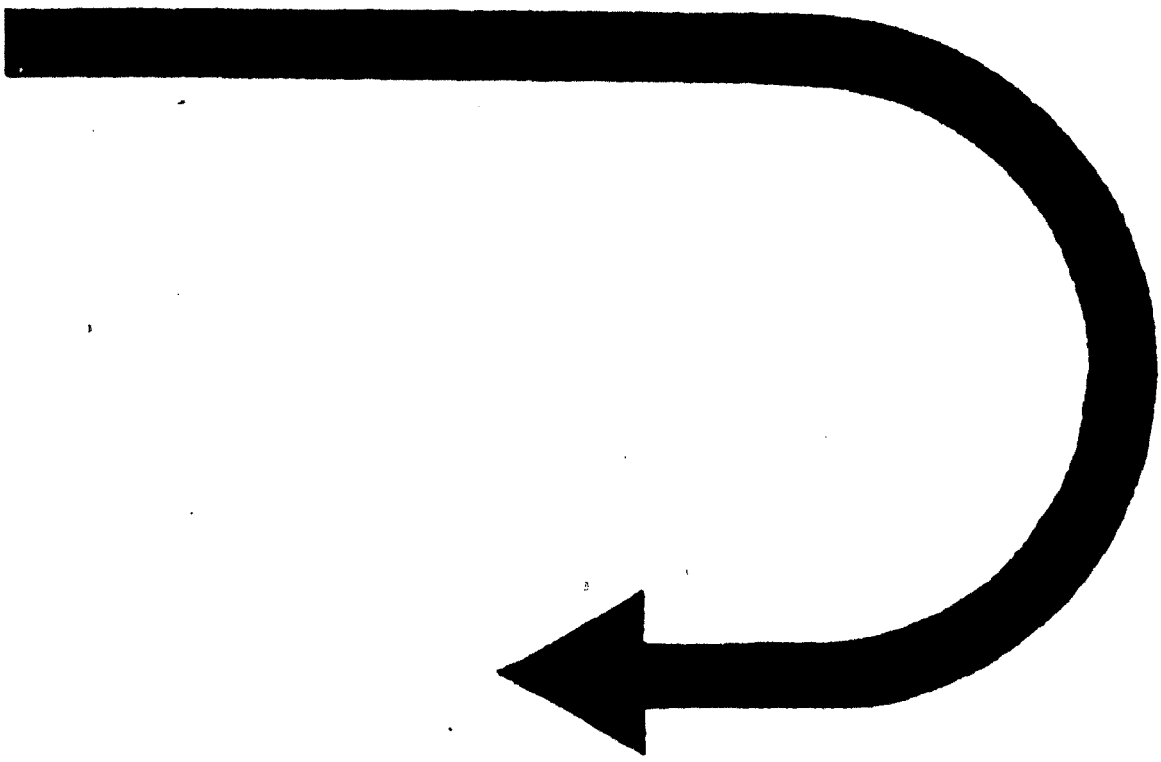

cardiagn.com

Note

Cover can also be removed/installed with Torsen differential.

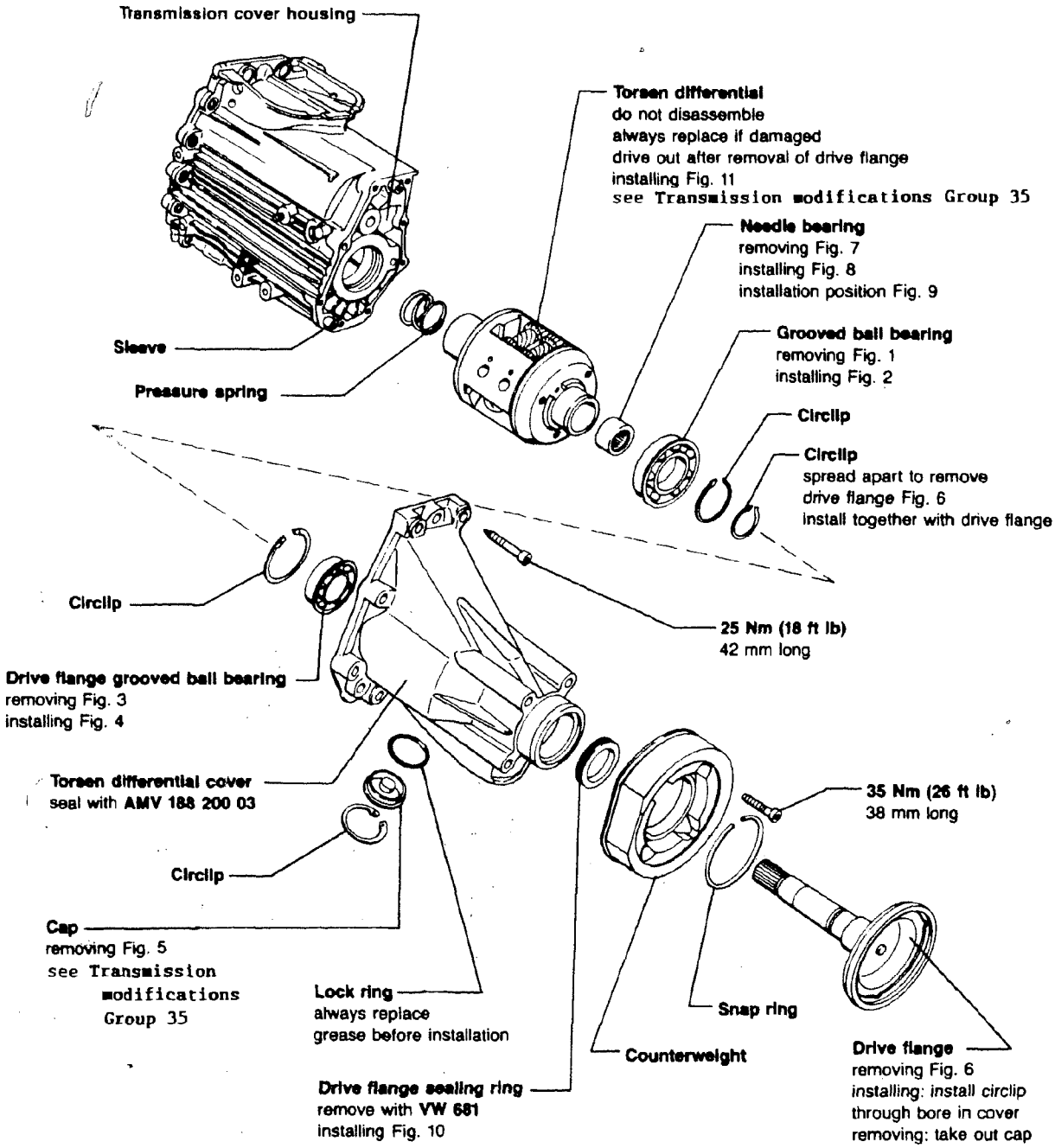

cardiagn.com

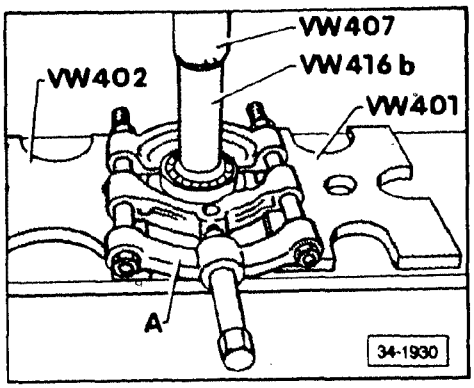

▶ **Fig. 1 Torsen differential grooved ball bearing, removing**

- **A** — separating device 12 - 75 mm, i.e. **Kukko 17/1**

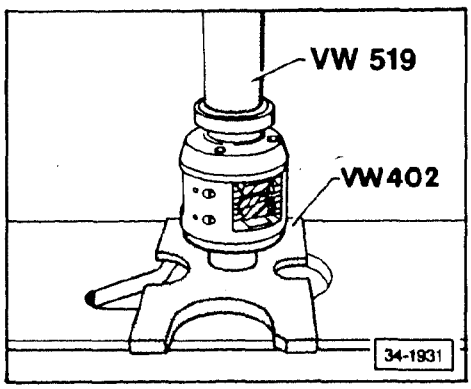

▶ **Fig. 2 Torsen differential grooved ball bearing, installing**

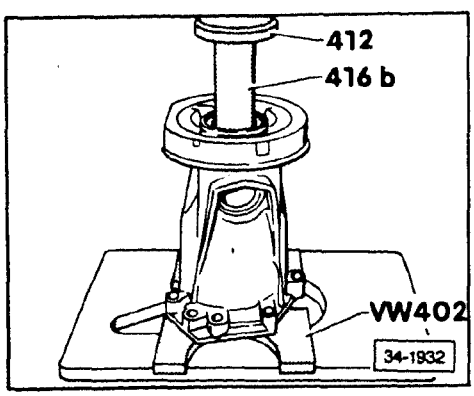

▶ **Fig. 3 Drive flange grooved ball bearing, removing**

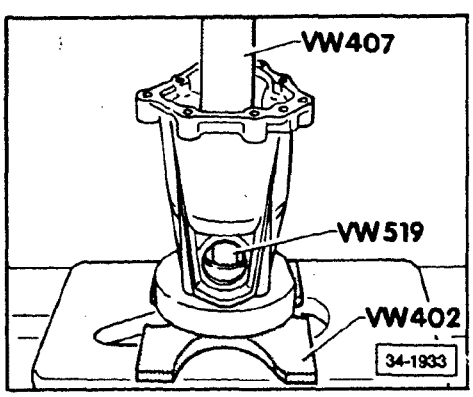

▶ **Fig. 4 Drive flange grooved ball bearing, installing**

cardiagn.com

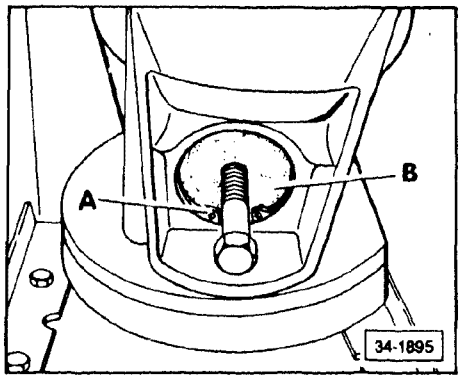

▶ **Fig. 5 Cap, removing**

- insert M8 screw into threaded hole of cap **B** and pull cap out

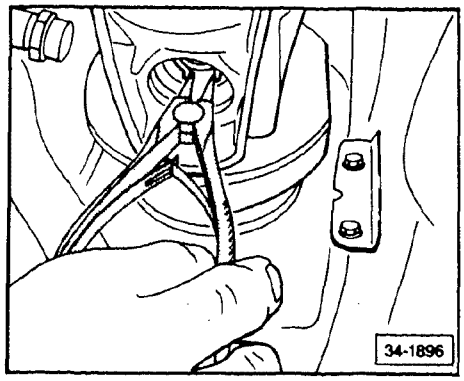

▶ **Fig. 6 Drive flange, removing**

- spread circlip to remove drive flange
  - when installing drive flange, also install circlip

Note

Do not over stretch circlip, it must lie in the base of the groove.

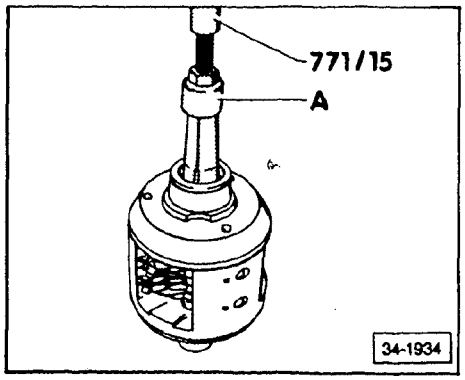

▶ **Fig. 7 Needle bearing, removing**

- drive out with puller **A**, i.e. **Kukko 21/4** 23.5 mm - 30 mm

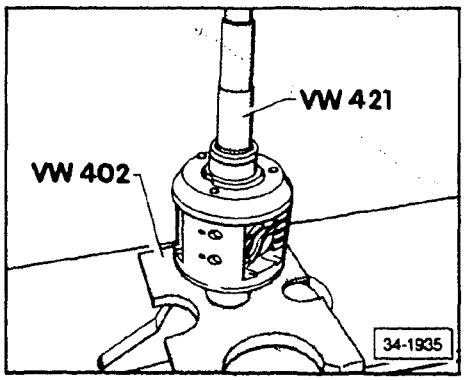

▶ **Fig. 8 Needle bearing, installing**

cardiagn.com

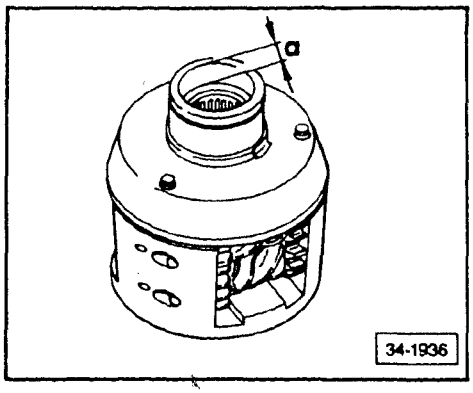

▶ **Fig. 9 Needle bearing, installation position**

- dimension **a** = 14 mm

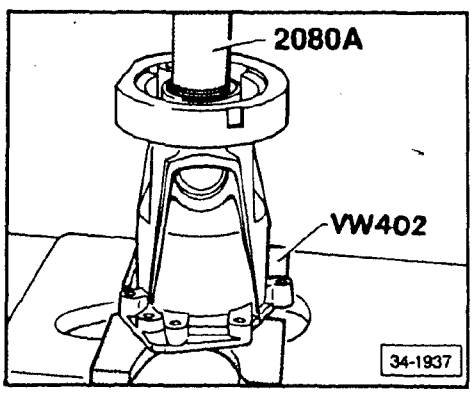

▶ **Fig. 10 Sealing ring, installing**

- drive sealing ring in to 2 mm below cover inner edge

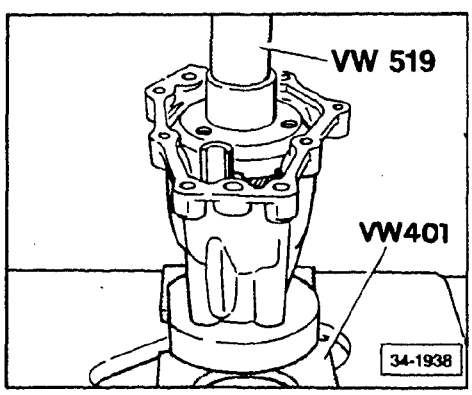

▶ **Fig. 11 Torsen differential, installing**

cardiagn.com

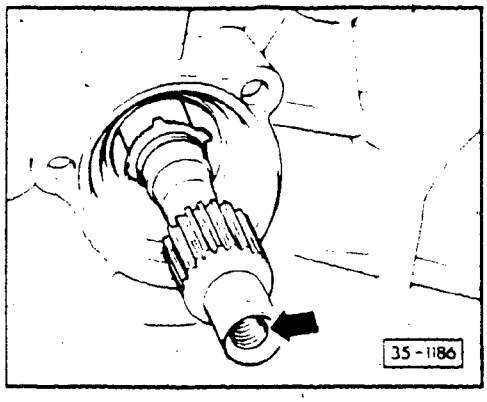

Beginning with transmission 21 07 9, the threaded hole (**arrow**) in the main shaft, which is used for installing the ball bearing, is discontinued.

When installing the bearing in transmissions without the threaded hole, use tool **3235**. The procedure for removing the bearing is unchanged.

Ball bearing, installing in housing

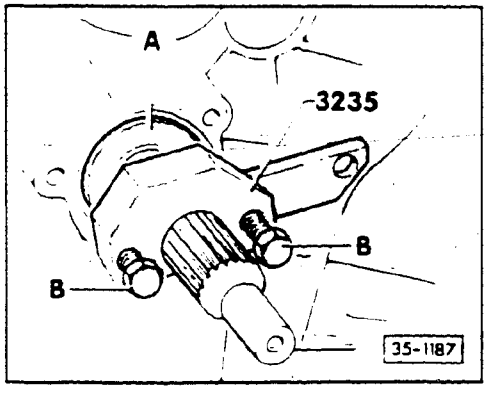

- push bearing as far as possible onto main shaft
- install thrust pad **A** (part of tool **3235**) on bearing
- install **3235** behind clutch plate splines on main shaft
- press bearing in by turning two bolts **B** alternately in stages

Note

The ends of bolts **B** must align with the two depressions in the thrust pad when depressing.

> **CAUTION**
>
> **Turn each bolt ONLY a half turn at a time to prevent damage to the bearing.**

Oil drilling in main shaft, deleted

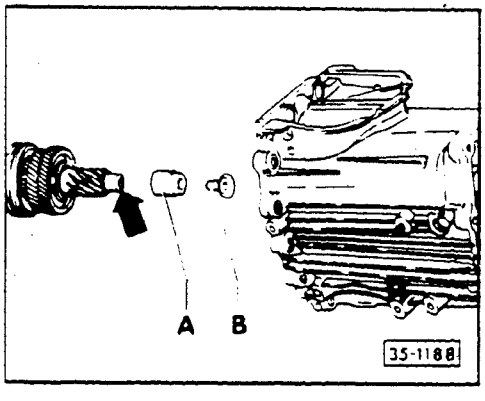

Also beginning with transmission 21 07 9, the oil drilling (**arrow**) for 3rd/4th gear is no longer present in **some transmissions**.

The needle bearing **A** to support the main shaft in the transmission housing is then installed without the plastic sleeve **B**.

If, during repairs, the main shaft is replaced with a shaft that has the oil drilling, the plastic sleeve must be installed.

cardiagn.com

Index

01A 5-speed

Double taper roller bearing inner race
- removing/installing 35.10

Double taper roller bearing outer race
- removing/installing 35.10

Fifth gear
- removing/installing 35.4

Fifth/reverse gear operating sleeve
- installing 35.16

First/second gear operating sleeve
- installing 35.11

First/second gear synchronizer hub
- installing 35.12
- removing 35.11

Fourth gear
- circlip 35.5
- installing 35.13
- removing 35.12

Mainshaft
- adjusting 35.6
- assembly 35.2
- circlips, location 35.5
- installing 35.3

Mainshaft needle bearing
★ - installing 35.3, 35.17
- removing 35.3, 35.5

Pinion and hollow shaft
- assembly 35.8
- circlips, location 35.15, 35.17

Synchronizer hub
- removing 35.13

Synchronizer ring
- checking 35.4, 35.11

Synchronizer spring
- installing 35.3, 35.11

Taper roller bearing inner race
- circlip, determining 35.14
- removing/installing 35.13

Taper roller bearing outer race
- removing 35.14
- removing production bushing 35.16

Third gear
- removing/installing 35.12

Third/fourth gear operating sleeve
- installing 35.4

Third/fourth gear synchronizer hub
- pressing off/on 35.2a

Transmission
- modifications 35.17

★ <u>NEW INFORMATION</u> since last filming

cardiagn.com

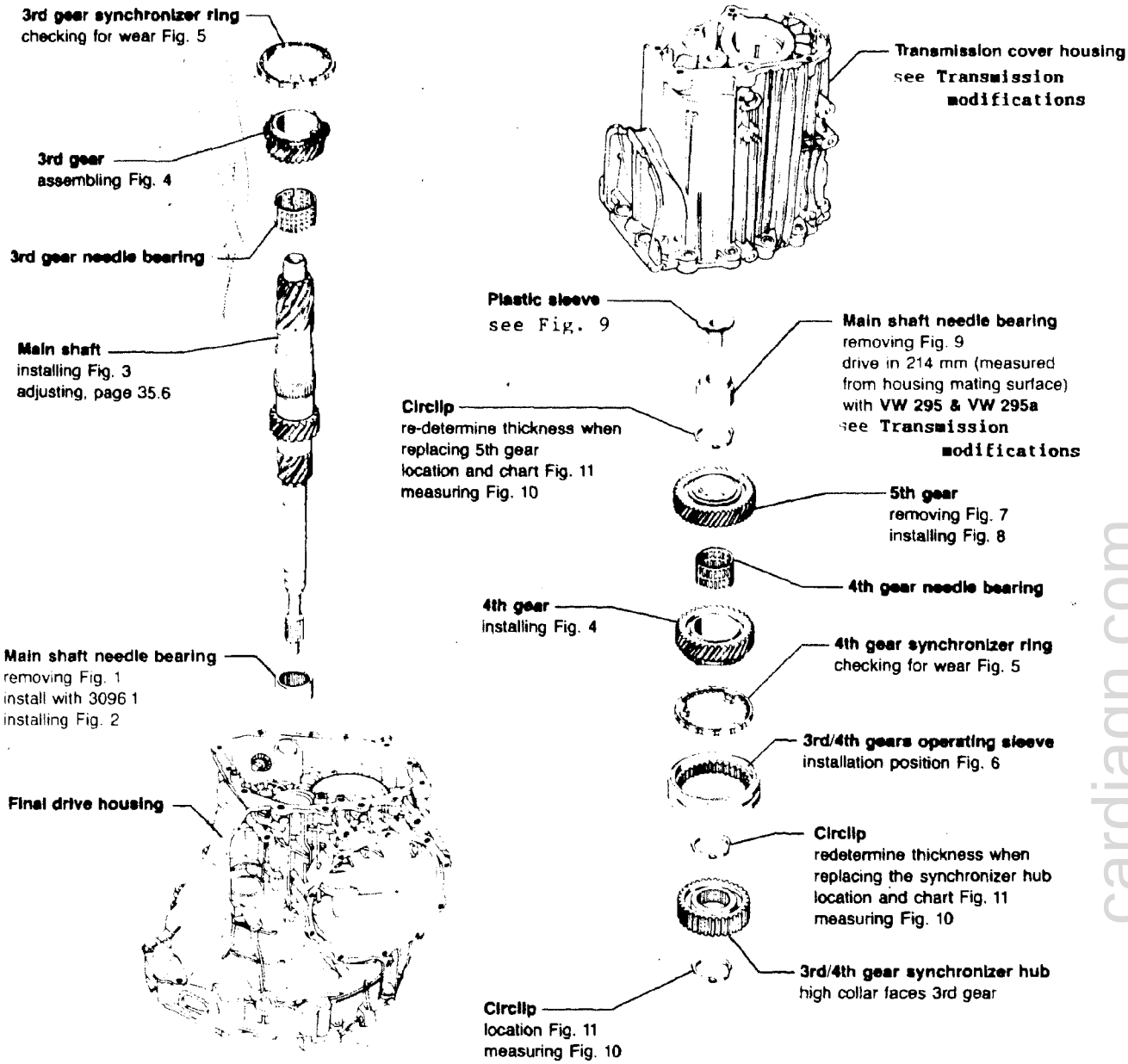

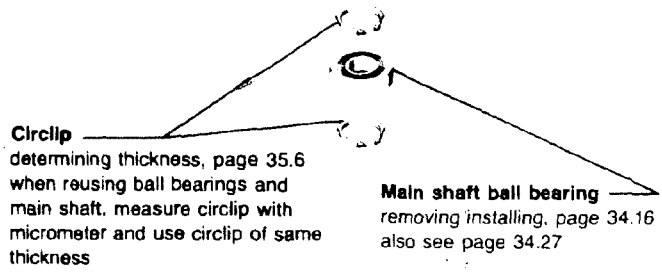

Note

When installing new gears or main shaft, note technical data, see Repair Group 00 - code letters, application, ratios, filling capacities.

Note

Since circlips of varying size and thickness are used, the individual circlips must be identified (identify with numbers as in Fig. 11). Thickness of the individual circlip is re-determined if a component directly affected is being replaced.

Synchronizers, replacing

Starting from date of manufacture 26 01 7, the outside diameter on the three synchronizer ring stops and the groove on the synchronizer hub were reduced by 0.6 mm. Do not install synchronizer hubs and rings of different sizes together.

35-1106

cardiagn.com

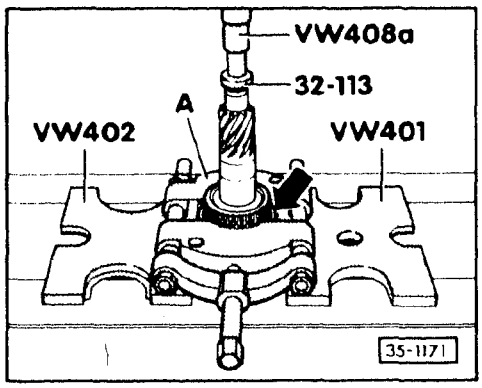

3rd/4th gear synchronizer hub, pressing off

- support hub with separator **A**, 22-115 mm, e.g. **Kukko 17/2**

Note

Press 3rd gear synchronizer ring (**arrow**) towards 3rd gear before positioning separator.

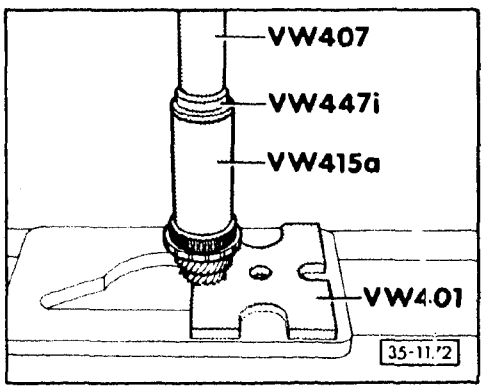

3rd/4th gear synchronizer hub, pressing on

cardiagn.com

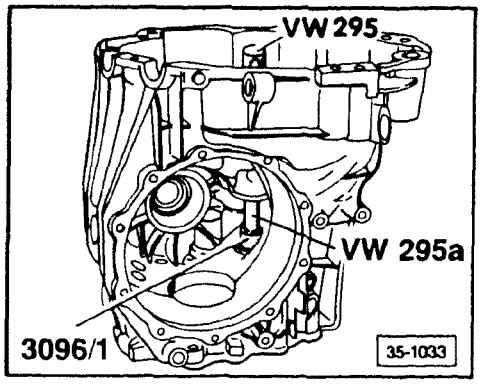

▶ **Fig. 1 Main shaft needle bearing, removing**

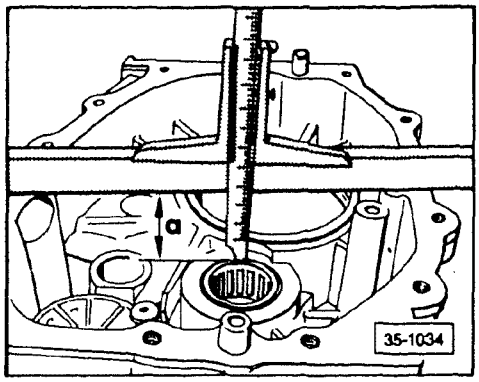

▶ **Fig. 2 Needle bearing, installing**

- dimension **a** from lower edge of straightedge to upper edge of needle bearing 39.5 mm

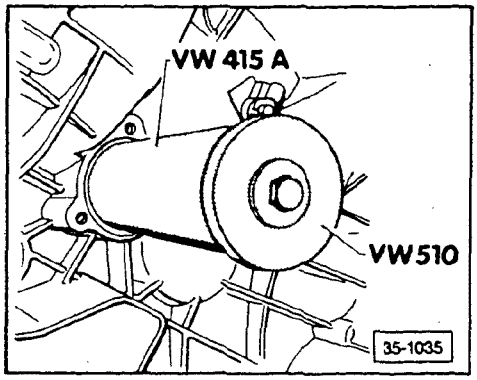

▶ **Fig. 3 Main shaft, installing**

- install main shaft, output shaft, and shift mechanism complete
- install circlip (item 3) and pull main shaft with a bolt into housing and ball bearing

Note

Preferred method of installation is with **3235**.
See page 34.13

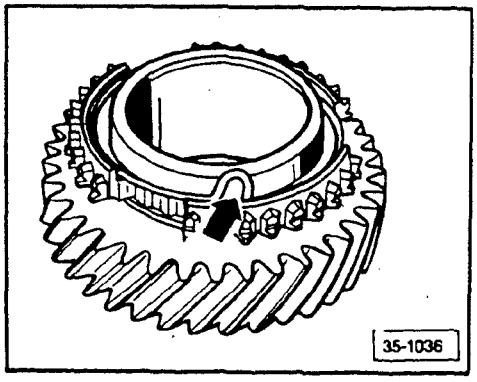

▶ **Fig. 4 Spring, installing**

- install spring **(arrow)** in gear by installing angled end in bore

cardiagn.com

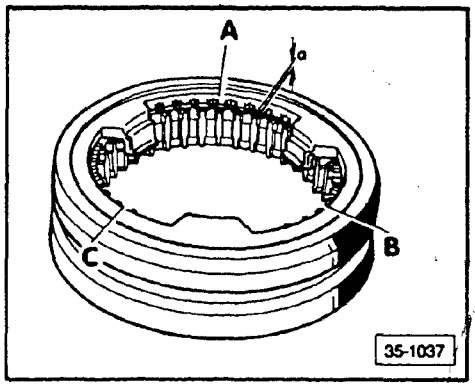

▶ **Fig. 5 Synchronizer ring, checking for wear**

- press synchronizer ring into operating sleeve and measure gap **a** with a feeler gage in positions **A, B,** and **C**
- add measured values and divide by 3
  - value obtained must not be less than 0.5 mm

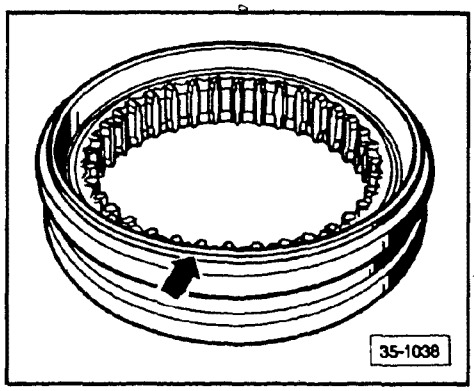

▶ **Fig. 6 3rd/4th gear operating sleeve, installing**

- recessed side (**arrow**) faces 3rd gear

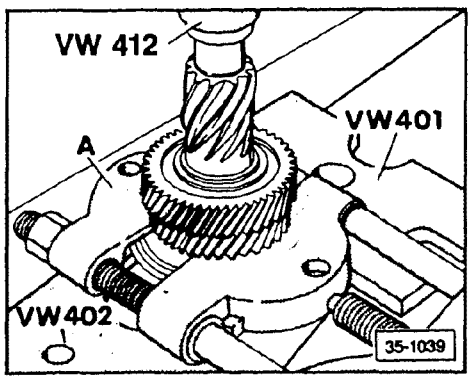

▶ **Fig. 7 5th gear, removing**

- **A** — separating device 12 - 75 mm, e.g. **Kukko 17/2**

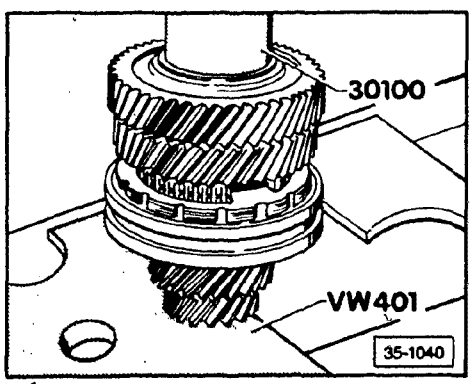

▶ **Fig. 8 5th gear, installing**

- the higher collar faces reverse gear
- the oil traps face 4th gear

cardiagn.com

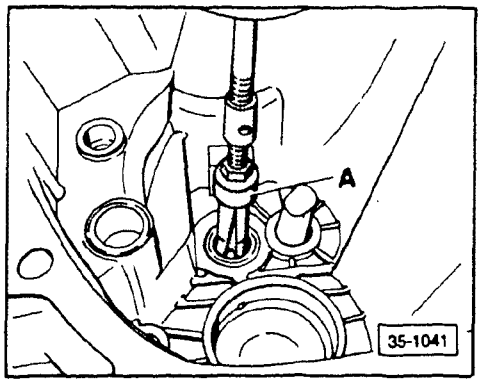

▶ **Fig. 9 Main shaft needle bearing, removing**

- use puller **A** e.g. **Kukko 21/4** (23.5 mm - 30 mm) with **VW 771/1** and **VW 771/15**

beginning with transmission 21 07 9, the oil drilling for 3rd/4th gear is no longer present in **some transmissions.**

The needle bearing to support the main shaft in the transmission housing is then installed without the plastic sleeve.

If, during repairs, the main shaft is replaced with a shaft that has the oil drilling, the plastic sleeve must be installed. (see page 35.2)

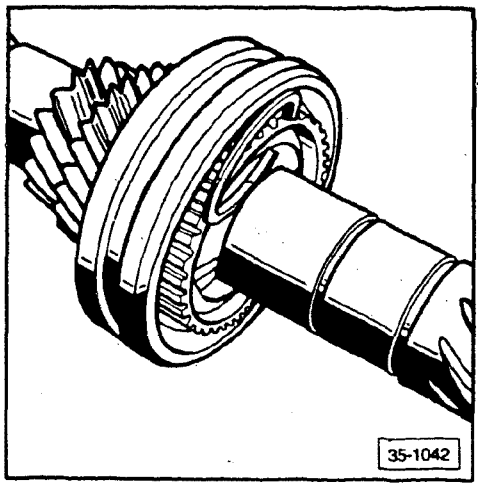

▶ **Fig. 10 4th gear circlip, determining**

- determine the thickest circlip that can be used and install
- determine circlip for 5th gear in same manner

Note

The following circlips are available – see Fig. 11.

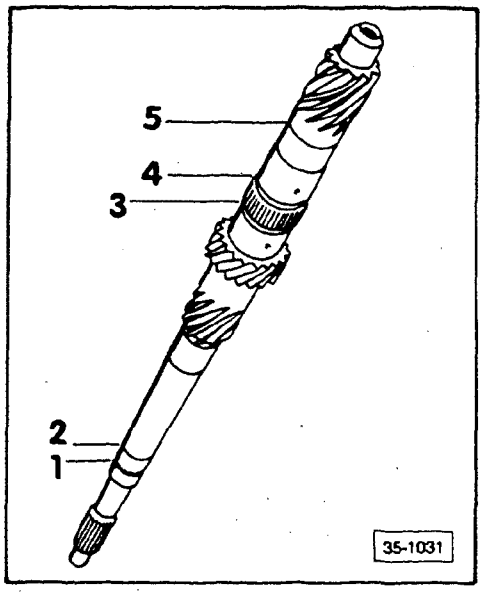

▶ **Fig. 11 Location of circlips**

- thicknesses of circlips **1**, **2**, **4**, and **5** must be determined
- thickness of circlip **3** is always the same
- determine thickness of circlips **1** and **2**
  - see Main shaft, adjusting
- circlip **3**, annealing color brown, Part No. **N 902 045.01** 2.00 mm thick

circlip **4**, annealing color blue

Thickness of circlip (mm)	Part number
1.90	N 902 944.01
1.93	N 902 944.02
1.96	N 902 944.03
1.99	N 902 944.04
2.02	N 902 944.05
2.05	N 902 944.06

cardiagn.com

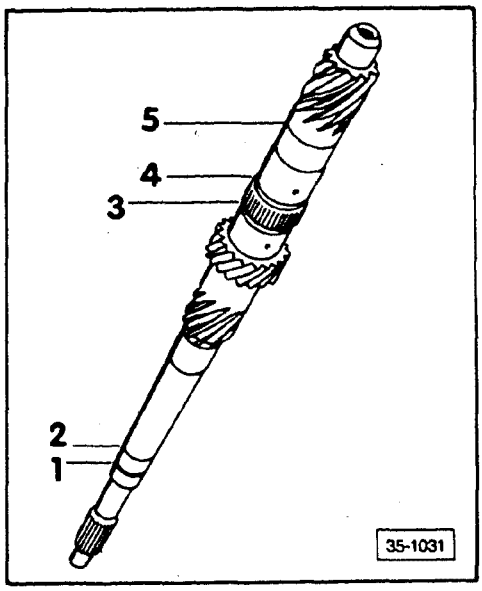

circlip **5**

Thickness of circlip (mm)	Part number
1.90	N 902 942.02
1.93	N 902 942.03
1.96	N 902 942.04
1.99	N 902 942.05
2.02	N 902 942.06

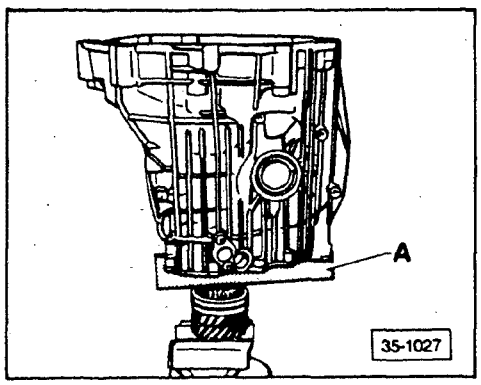

Main shaft, adjusting

- tighten main shaft with jaw covers in vise
- place special tool **(A) 3167** on 3rd gear and install housing on special tool via main shaft

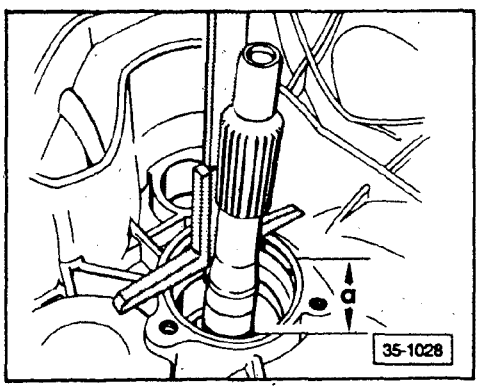

- place depth gage on housing and measure to the lower recess of the main shaft
  a = 28.5 mm

cardiagn.com

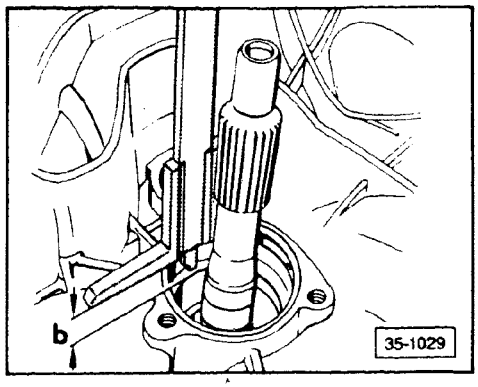

- place depth gage on housing and measure to contact surface of ball bearing
  - dimension **b** = 26.8 mm
- determine thickness of lower circlip
  - dimension **x**:
    x = **a** – **b**
    x = 28.5 mm – 26.8 mm = 1.70 mm
- determine thickness of circlip according to table

Measurement result (mm)	Thickness (mm)	Part number
1.48-1.56	1.54	N 902 941.14
1.57-1.65	1.63	N 902 941.15
1.64-1.71	1.69	N 902 941.05*
1.66-1.74	1.72	N 902 941.16
1.72-1.79	1.77	N 902 941.06*
1.75-1.83	1.81	N 902 941.17
1.80-1.87	1.85	N 902 941.07*
1.84-1.92	1.90	N 902 941.18
1.88-1.95	1.93	N 902 941.08*
1.93-2.01	1.99	N 902 941.19
1.96-2.03	2.01	N 902 941.09*
2.02-2.10	2.08	N 902 941.20
2.04-2.11	2.09	N 902 941.10
2.11-2.20	2.17	N 902 941.11
2.20-2.27	2.25	N 902 941.12
2.28-2.35	2.33	N 902 941.13

*these circlips will no longer be available when current supplies are depleted

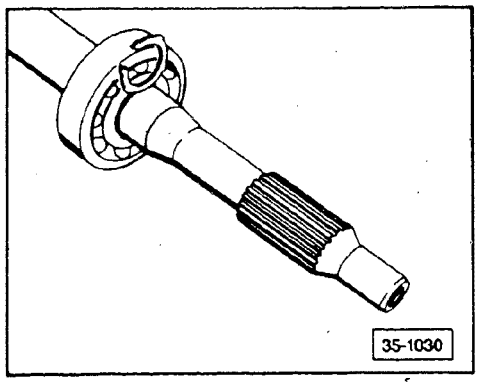

- install circlip and ball bearing on main shaft with **30-100**
- determine the thickest circlip that can be installed in upper circlip groove

The circlips available are the same as shown in the above chart

cardiagn.com

THIS FRAME INTENTIONALLY LEFT

BLANK

cardiagn.com

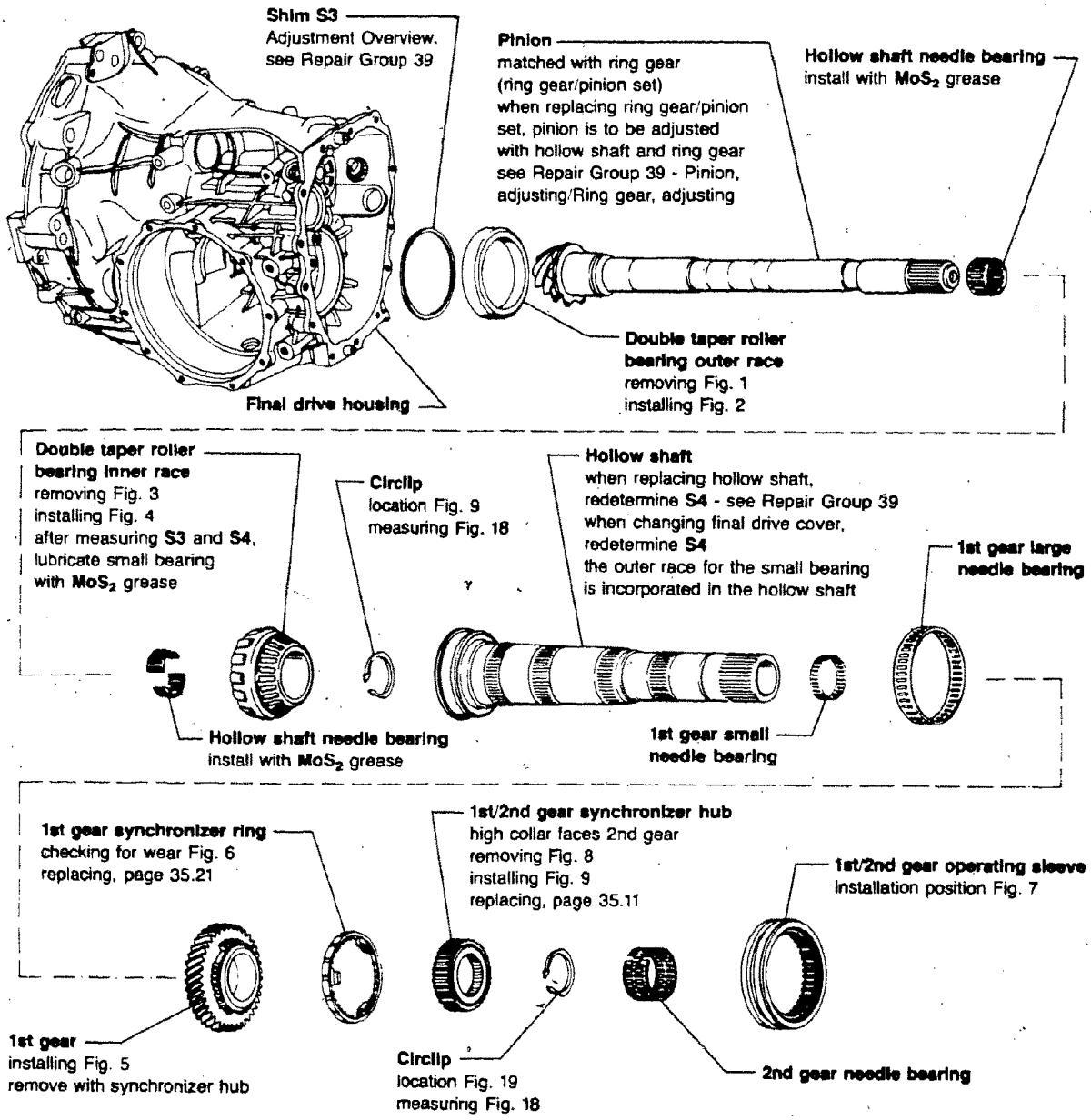

CAUTION

When replacing taper roller bearings, determine the installation position before removing the pinion with the hollow shaft (actual measurement). See Repair Group 39 - Determining installation position of the pinion.

CAUTION

Do not damage seal lips between taper roller bearings.

Note

Before installing new gear or ring gear/pinion set - note technical data - see Repair Group 00.

cardiagn.com

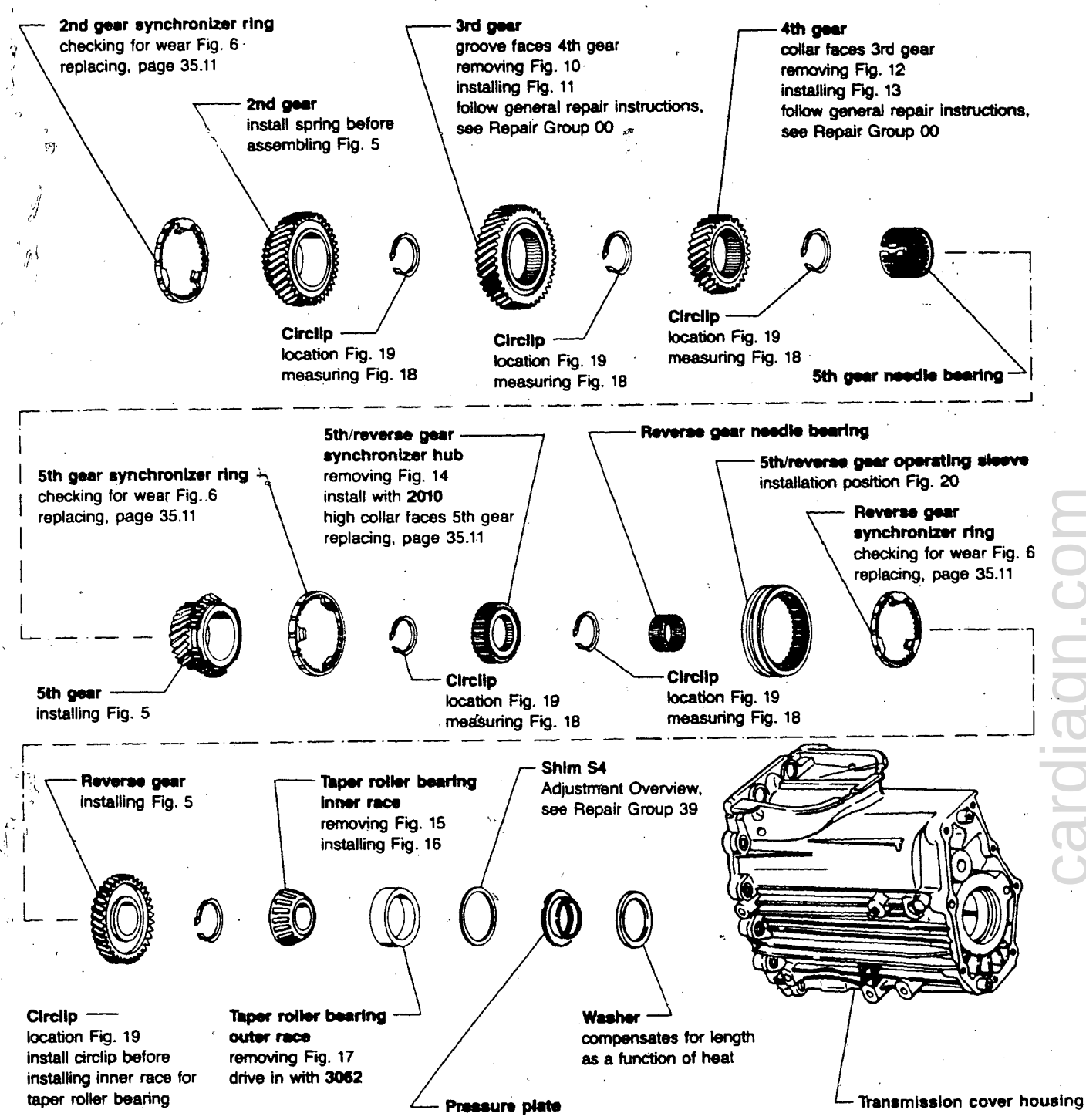

Note

Since circlips of varying size and thickness are being used, the individual circlips must be identified (identify with numbers as in Fig. 19). Thickness of the individual circlip is re-determined if a component directly affected is being replaced.

Synchronizers, replacing

Starting from date of manufacture 26 01 7, the outside diameter of the three synchronizer ring stops and the groove in the synchronizer hub were reduced by 0.6 mm. Do not install synchronizer hubs and rings of different sizes together.

35-1105

cardiagn.com

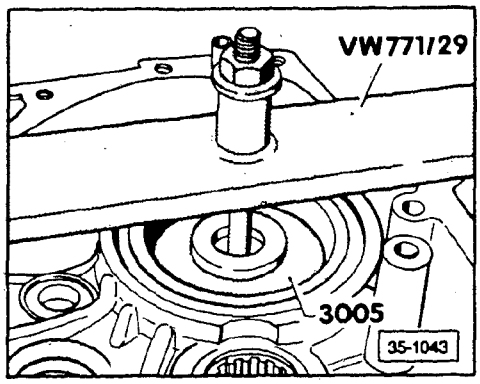

▶ **Fig. 1 Double taper roller bearing outer race, removing**

- place special tool **3005** under outer race, install **VW 771/29** and a bolt on housing
  - when tightening bolt, outer race is pulled out of housing

Note

VW 771/1 and **VW 771/15** can also be used for this operation.

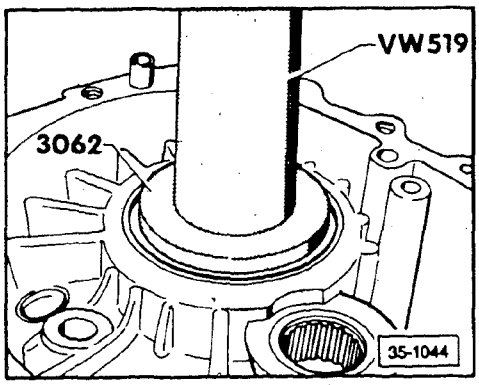

▶ **Fig. 2 Double taper roller bearing outer race, installing**

- outer race for small bearing is incorporated in hollow shaft

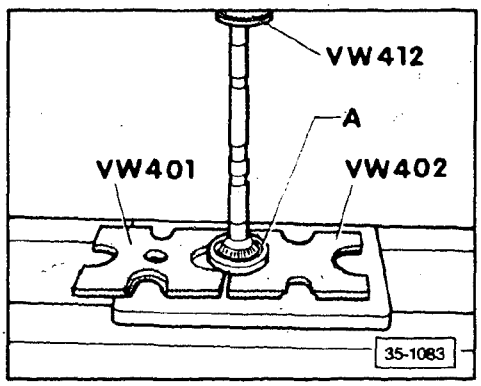

▶ **Fig. 3 Double taper roller bearing inner race, removing**

- outer race **A** must be installed to remove inner race

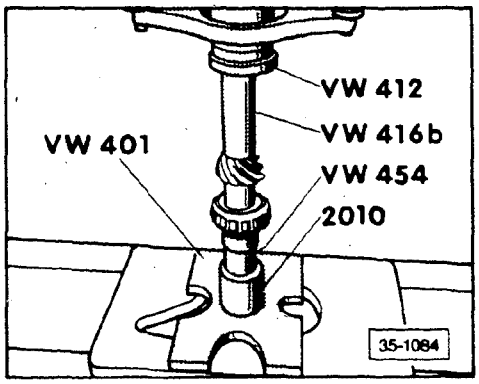

▶ **Fig. 4 Double taper roller bearing inner race, installing**

- secure double taper roller bearing as described in Fig. 18

cardiagn.com

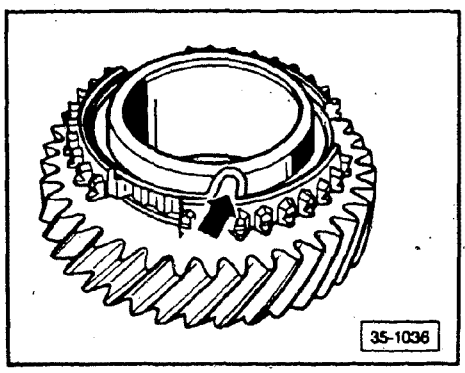

▶ **Fig. 5 Spring, installing in gear**

- assemble spring (**arrow**) in gear by installing angled end of spring in bore

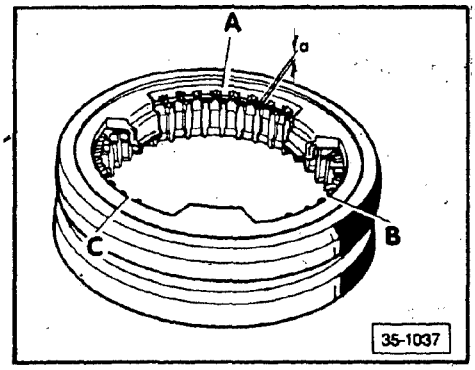

▶ **Fig. 6 Synchronizer ring, checking for wear**

- press synchronizer ring into operating sleeve and measure gap **A** with a feeler gage in positions **A, B,** and **C**
- add values obtained and divide by 3
  - the measured value must not be less than 0.5 mm

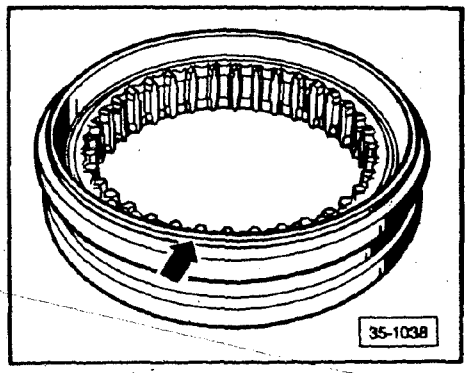

▶ **Fig. 7 1st/2nd gear operating sleeve, installing**

- recessed side (**arrow**) faces 1st gear

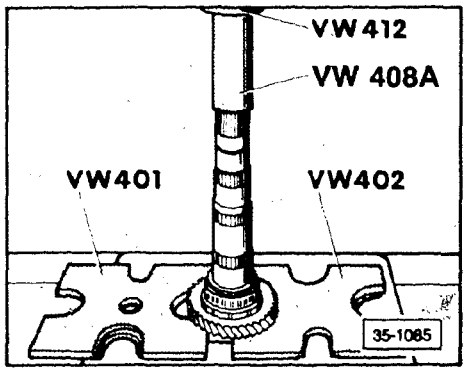

▶ **Fig. 8 1st/2nd gear synchronizer hub, removing**

- remove synchronizer hub with 1st gear

cardiagn.com

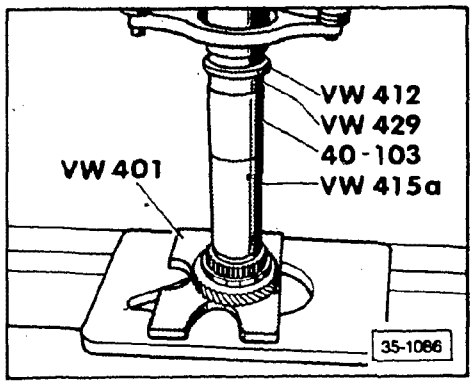

▶ **Fig. 9 1st/2nd gear synchronizer hub, installing**

- install synchronizer hub with 1st gear so that chamfer on internal splines faces 2nd gear

Note

Alternately, the shaft can be pressed onto the gear using **VW 408A, 2050** and **VW 40/40**

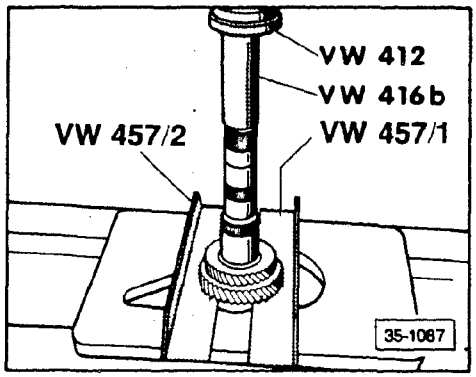

▶ **Fig. 10 3rd gear (toothed gear), removing**

- remove toothed gear and 2nd gear together

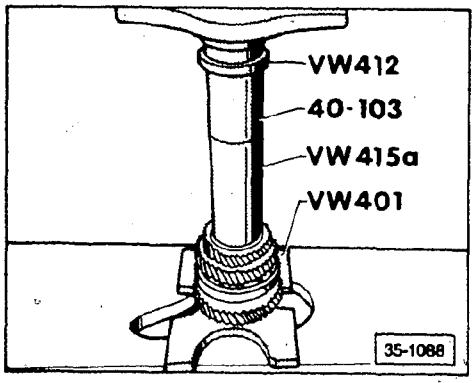

▶ **Fig. 11 3rd gear, installing**

- installation position: groove faces 4th gear

Note

See Fig. 9.

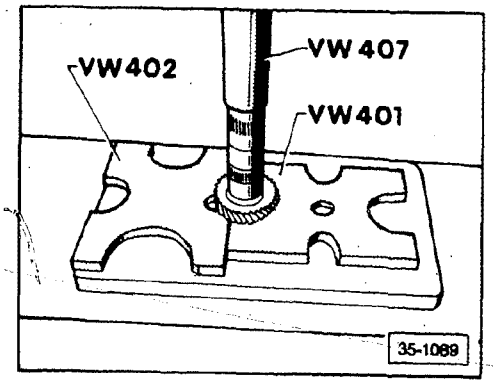

▶ **Fig. 12 4th gear, removing**

cardiagn.com

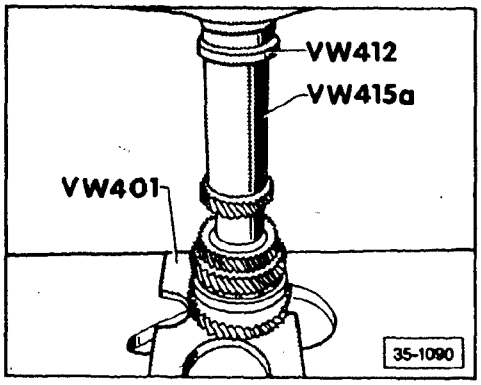

▶ **Fig. 13 4th gear, installing**

- collar faces 3rd gear

Note

Also see Fig. 9.

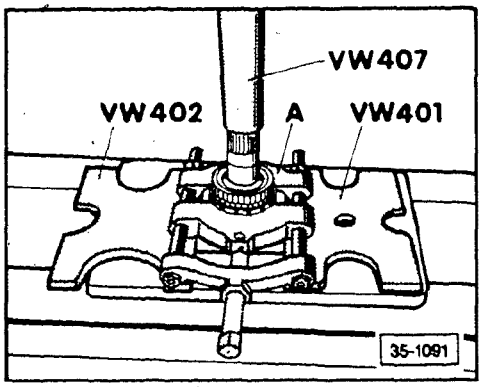

▶ **Fig. 14 Synchronizer hub, removing**

- remove synchronizer hub with 5th gear
  - **A** - separating device 12 - 75 mm, e.g. **Kukko 17/1**

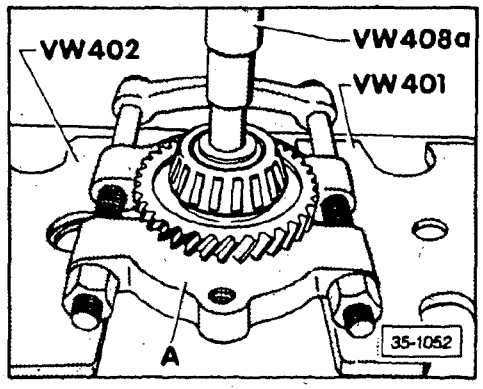

▶ **Fig. 15 Taper roller bearing inner race, removing**

- remove inner race with reverse gear
  - **A** = separating device 12 - 75 mm, e.g. **Kukko 17/1** or use **VW 402/VW 401** without separating device

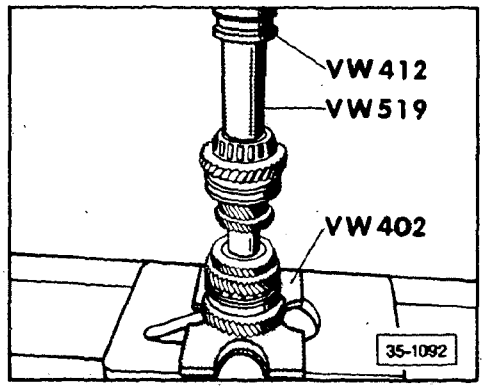

▶ **Fig. 16 Taper roller bearing inner race, installing**

- install circlip before installing inner race
  - thickness of circlip Fig. 19

cardiagn.com

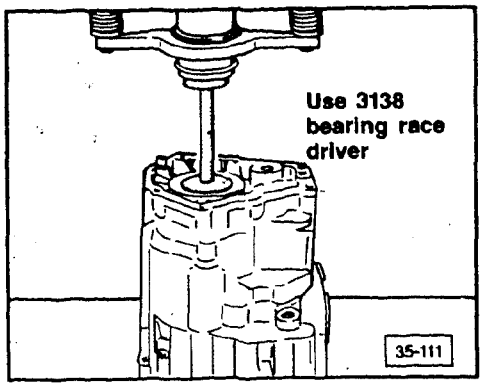

▶ **Fig. 17 Taper roller bearing outer race, removing**

- refer to Fig. 21
- remove outer race together with pressure plate, adjustment shim, and length-adjusting washer

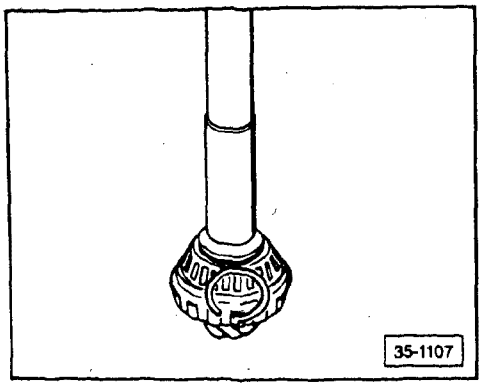

▶ **Fig. 18 Taper roller bearing circlip, determining**

- determine the thickest circlip that can be used and install

Thickness of circlip (mm)	Spare part number
2.00	N 902 942 10
2.02	N 902 942 06
2.04	N 902 942 11
2.06	N 902 942 12
2.08	N 902 942 08
2.10	N 902 942 13

- synchronizer hub circlips and 3rd/4th gear circlip are determined in same manner as taper roller bearing circlip
- the following circlips are available for the hollow shaft, see Fig. 19

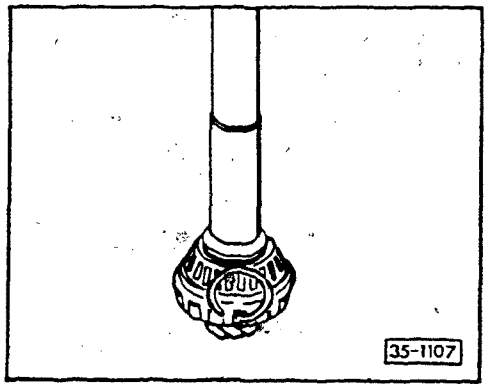

Tapered roller bearing circlip, revised

Beginning with transmission date 03 04 0, the circlip sizes are revised as follows:

Thickness of circlip (mm)	Part number
2.00	N 902 942.10
2.03	N 902 942.15
2.06	N 902 942.12
2.09	N 902 942.16
2.12	N 902 942.17
2.15	N 902 942.18

cardiagn.com

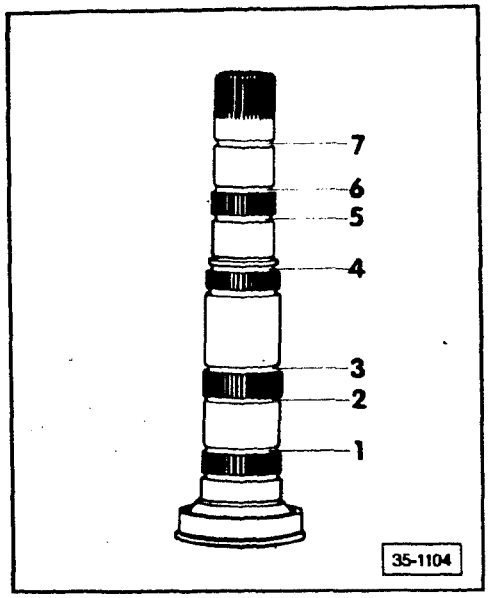

▶ **Fig. 19 Circlips, location**

- see Transmission modifications
- determine thickness of circlips **1**, **3**, **4**, and **6**
  - thickness of circlips **2**, **5**, and **7** is always equal (see table)

circlip **1**, annealing color blue

Thickness of circlip (mm)	Part number
1.90	N 902 947.01
1.93	N 902 947.02
1.96	N 902 947.03
1.99	N 902 947.04
2.02	N 902 947.05

circlip **2**, annealing color blue

Thickness of circlip (mm)	Part number
2.50	N 902 947.06

circlip **3**

Thickness of circlip (mm)	Part number
1.90	N 902 946.02
1.93	N 902 946.03
1.96	N 902 946.04
1.99	N 902 946.05
2.02	N 902 946.06

circlip **4**

Thickness of circlip (mm)	Part number
1.87	N 902 952.01
1.90	N 902 952.02
1.93	N 902 952.03
1.96	N 902 952.04

cardiagn.com

circlip **5**, annealing color brown

Thickness of circlip (mm)	Part number
2.00	N 902 945.01

circlip **6**, annealing color blue

Thickness of circlip (mm)	Part number
1.90	N 902 944.01
1.93	N 902 944.02
1.96	N 902 944.03
1.99	N 902 944.04
2.02	N 902 944.05
2.05	N 902 944.06

circlip **7**

Thickness of circlip (mm)	Part number
2.50	N 902 944.07

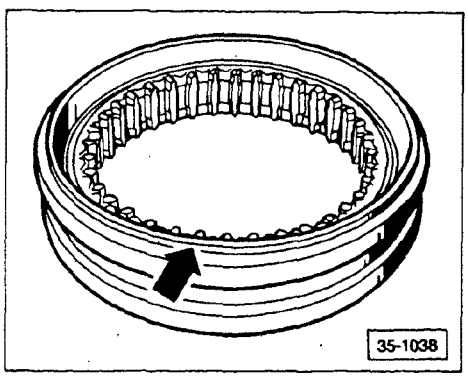

▶ **Fig. 20 5th/reverse gear operating sleeve, installing**

- recessed side (**arrow**) faces 5th gear

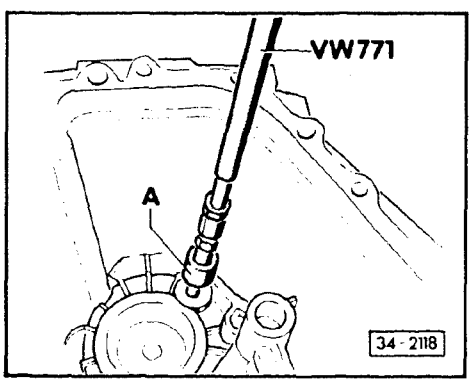

▶ **Fig. 21 Securing bushing for taper roller bearing outer race, remove**

- remove production-installed bushing
  - **A** = extractor, 12 - 16 mm, e.g. **Kukko 21/1**

Note

It is not necessary to install the bushing if the outer race is replaced.

cardiagn.com

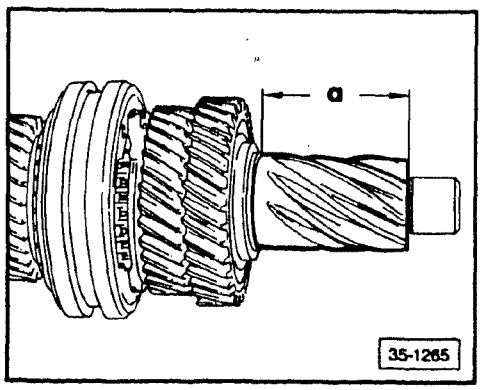

Transmission modifications

Reverse gear

Beginning with transmission date 20 08 0, the reverse gear teeth on the main shaft and those of the reverse gear have been lengthened as follows:

- dimension **a** = current: 54.50 mm
  New: 56.50 mm

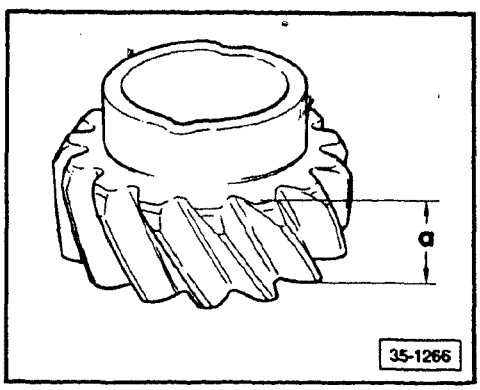

- dimension **a** = current: 18.3 mm
  New: 19.7 mm

Note

The new mainshaft can be installed in earlier transmissions (before 20 08 0) but the needle bearing must be installed 2.0 mm deeper (see Mainshaft needle bearing installation on this page).

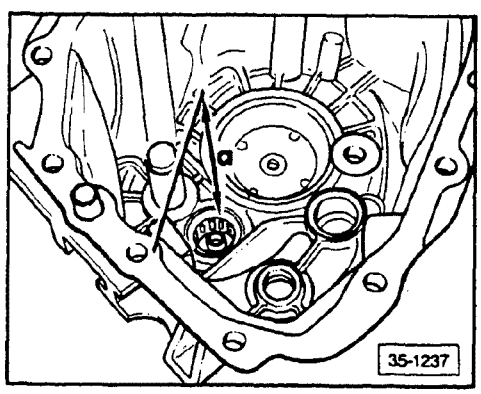

Main shaft needle bearing installation

Beginning with transmission date 20 08 0, the main shaft needle bearing in the final drive housing is installed 2.0 mm deeper.

- dimension **a** = current: 214 mm
  New: 216 mm

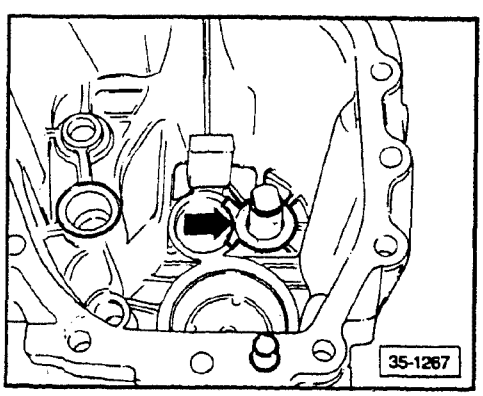

The final drive housing is slightly milled-out in the reverse gear area (**arrow**).

Note

The new reverse gear can only be installed in transmissions that have the revised housing and main shaft.

cardiagn.com

Tensioning cable mounting

Beginning with transmission date 20 08 0, the tensioning cable mount on the transmission was changed.

- dimension **a** = current: 23.5 mm
  New: 31.5 mm

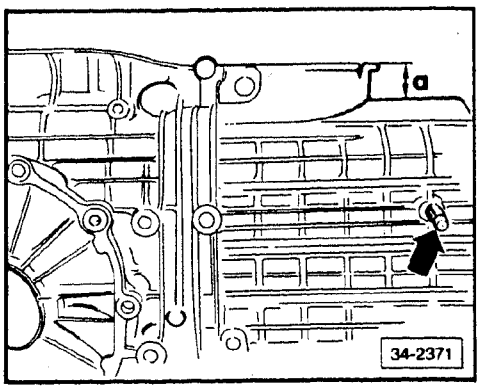

Beginning in 9/90 a mounting hole in the housing replaces the previously used mounting stud (**arrow**). The tensioning cable bracket is then provided with a mounting stud.

Note

Change the cable bracket when installing a new transmission.

Rear pinion needle bearing deleted

Beginning with transmission date 24 08 0, the rear needle bearing (**arrow 1**) is deleted.

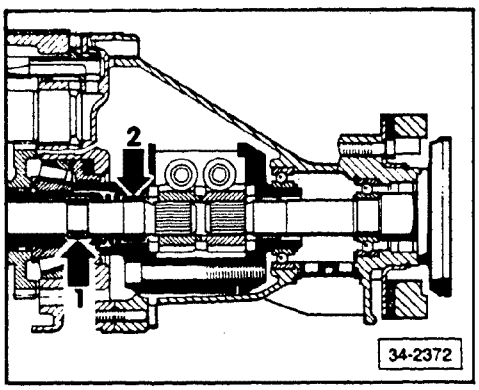

The pinion is now supplied with a needle bearing in the Torsen differential (**arrow 2**).

Note

The pinion and Torsen differential with the revised bearing can only be installed together in a current transmission.

The shaft is not machined in the area of the current bearing seat (**arrow 1**). It can only be installed together with the revised pinion and Torsen differential in current transmissions.

Needle bearing, removing

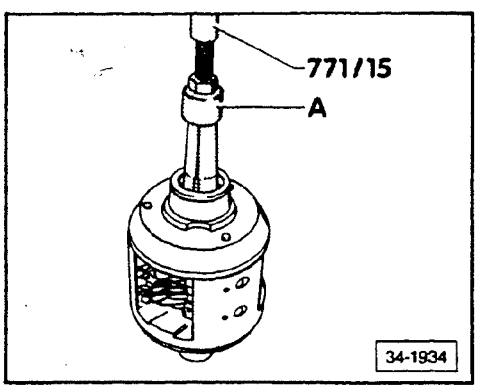

A = puller (**Kukko 21/4**, 23.5-30 mm)

cardiagn.com

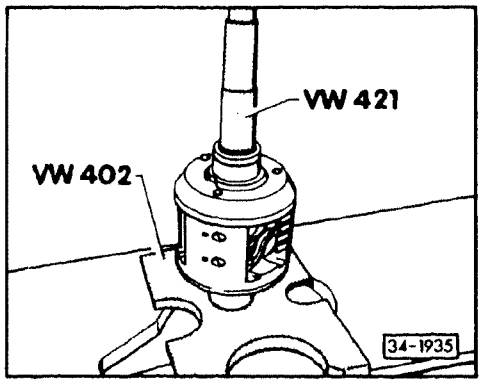

Needle bearing, pressing in

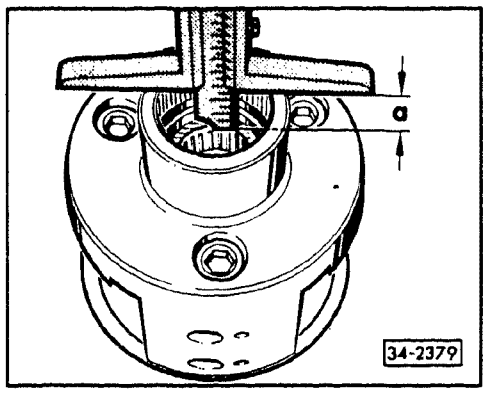

Needle bearing, press in depth

- **a** = 32.5 mm

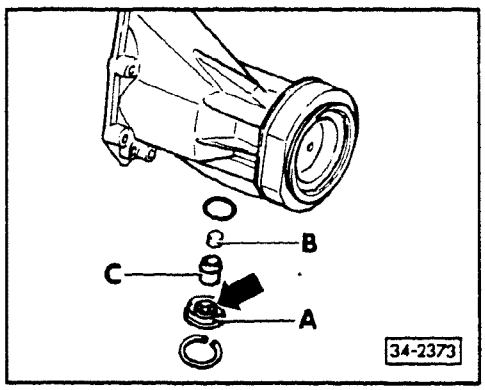

Additional magnet in Torsen differential cover

Beginning with transmission date 24 08 0, cap **A** is provided with magnet **B**, which is in sleeve **C**

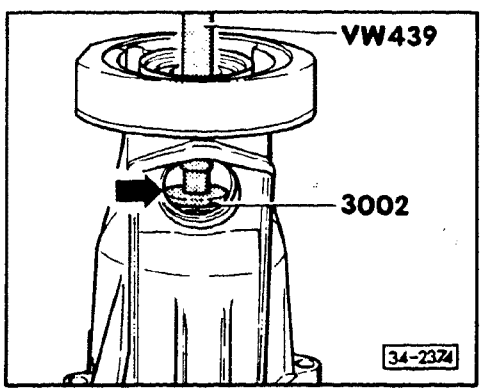

Torsen differential, removing

- drive out with **VW 439** and **3002**
  - insert **3002** through hole in housing (**arrow**)

cardiagn.com

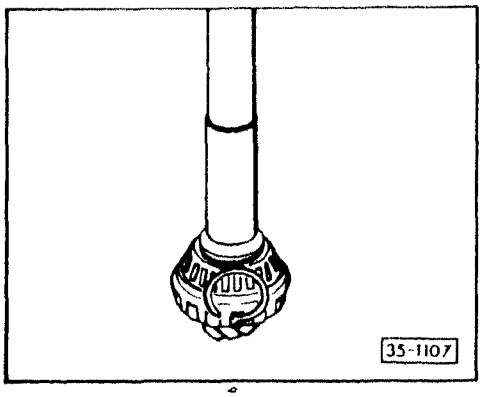

Tapered roller bearing circlip, revised

Beginning with transmission date 03 04 0, the circlip sizes are revised as follows

Thickness of circlip (mm)	Part number
2.00	N 902 942.10
2.03	N 902 942.15
2.06	N 902 942.12
2.09	N 902 942.16
2.12	N 902 942.17
2.15	N 902 942.18

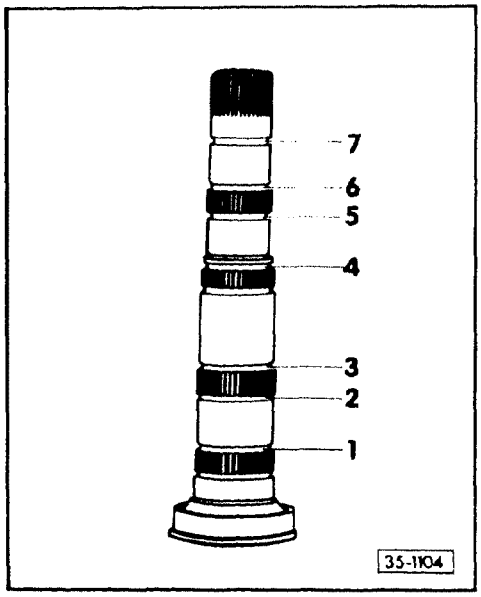

Hollow shaft circlips, revised

Beginning with transmission date 03 04 0, the circlip sizes are revised as follows:

Circlip 3

Thickness of circlip (mm)	Part number
1.90	N 902 946.02
1.94	N 902 946.09
1.98	N 902 946.10
2.02	N 902 946.06
2.06	N 902 946.11

Circlip 4

Thickness of circlip (mm)	Part number
1.86	N 902 952.07
1.90	N 902 952.02
1.94	N 902 952.08
1.98	N 902 952.09

Note

The circlips **1**, **2**, **5**, **6**, and **7** remain unchanged.

New circlips can be installed in all current transmissions.

Current circlips will be deleted when supplies are used up.

cardiagn.com

Index

Driveshaft
- adjusting 39.6
- determining center position 39.6
- removing/installing (overview) 39.4
- removing/installing 39.5
- removing/installing (vehicles with airbag) 39.4a

Driveshaft flange oil seal
- replacing 39.3

Flange shaft circlip
- replacing 39.2a

Front differential
- assembly 39.7
- bearings 39.8
- gears, installing 39.9

Front differential drive flange oil seals
- replacing 39.2

Gear carrier housing
- replacing 39.19

Pinion
- adjusting 39.14

Pinion/hollow shaft bearing preload
- checking 39.15
- shim S3, determining 39.17
- shim S4, determining 39.18

Pinion/ring gear
- adjusting 39.10
- adjustment overview 39.11

Ring gear
- adjusting 39.20

Speedometer gear
- replacing 39.2a

Technical data
★ ■ chart 39.1a

Backlash
- adjusting 39.22

Rear differential
- adjustment overview 39.48
- assembly 39.33
- axle flange oil seals, replacing 39.27
- backlash, adjusting 39.55
- driveshaft flange oil seal, replacing 39.29
- flange shaft, adjusting 39.35
- pinion, adjusting 39.50
- pinion, disassembling/assembling 39.36
- removing/installing 39.30, 39.42
- ring gear, adjusting 39.53
- ring gear/pinion, adjusting 39.47
- ring gear/pinion, replacement 39.49
- rubber bonded bushing, removing/installing 39.31

- backlash, adjusting 39.55
- pinion, adjusting 39.50
- pinion, determining position 39.48
- removing/installing 39.42
- ring gear, adjusting 39.47
- ring gear/pinion, adjusting 39.47
- ring gear/pinion, replacement 39.49

★ NEW INFORMATION since last filming

cardiagn.com

Code, component specification, ratio, filler amounts

Rear differential

Code		AEX	AEC	ARS
Production	from:	06/86	06/86	
Arrangement	Type	Audi 80 Quattro	Audi 90/Coupe Quattro	
	Engine	2.0 liter 83 kW (108 hp)	2.3 liter 101 kW 2.3 liter 125 kW (20V)	
	Standard Transmission	AKT	AKU/AXL ASZ/AXM	
Ratio	Differential	41:9 = 4.556	37:9 = 4.111	
Filler amount		0.75 liter (0.79 qt)		
Specification		Transmission oil GL 5 (MIL-L 2105 B) SAE 90		
Drive shaft flange		90 mm	100 mm	90 mm

cardiagn.com

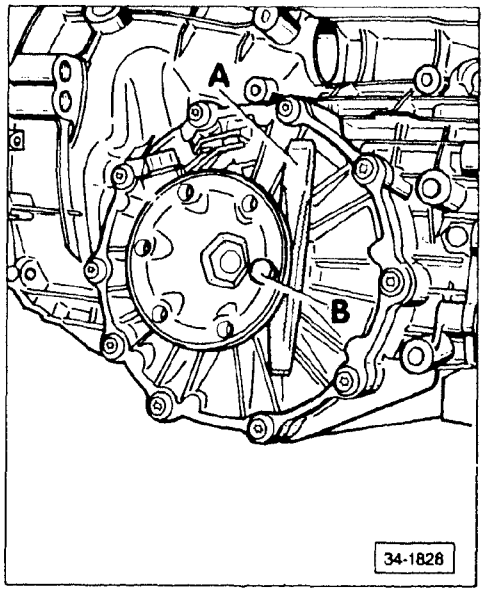

Front differential drive flange oil seals, replacing

(with transmission installed)

- remove axle shaft
- place oil pan under vehicle
- remove axle flange shaft by threading bolt **B** into flange against a punch or chisel **A**
  - always replace circlip
- remove seals with **VW 681**

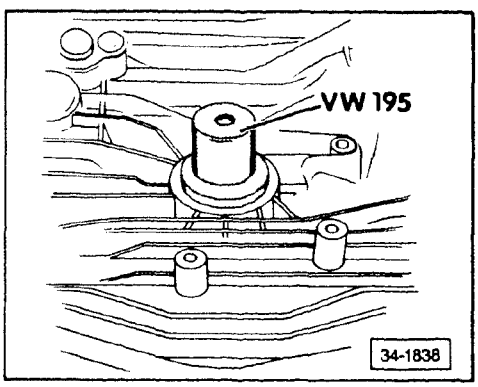

- drive right oil seal in to 5 mm (3/16 in.) below transmission housing surface

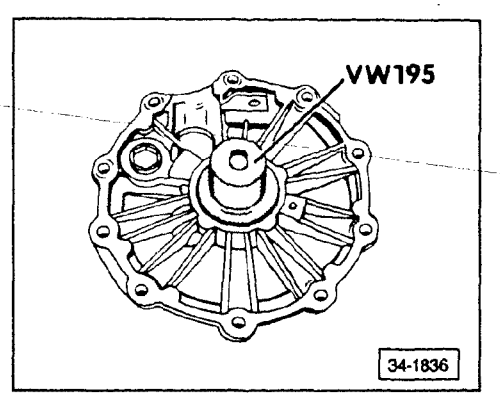

- drive left oil seal in to 5 mm (3/16 in.) below cover edge
- coat seal lips with multi-purpose grease
- drive in flange shaft with rubber hammer
- install axle shaft
- tighten shaft bolts to 45 Nm (33 ft lb)
- check transmission oil, refill if necessary

cardiagn.com

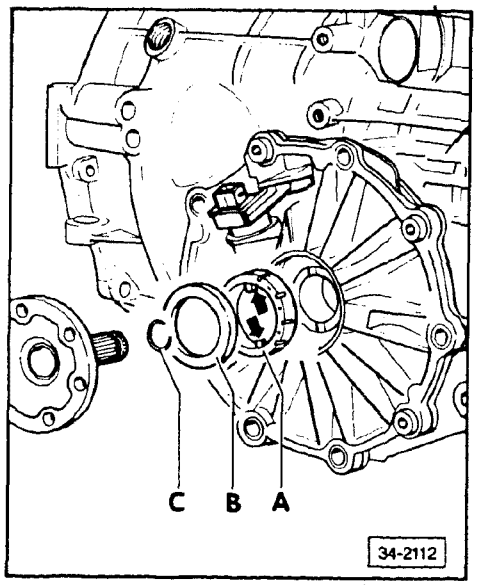

Speedometer gear, replacing

The speedometer gear **A** can be replaced with the transmission installed.

- remove left side axle shaft flange from flange on transmission
- remove flange shaft and seal **B**
- remove speedometer gear **A** by prying alternately on tabs (**arrows**) with a screwdriver

Note

When installing the speedometer gear, the tabs on the gear must point toward the seal. The tabs also lock into grooves in the differential gear housing.

- install new seal **B** and circlip **C** for flange shaft (see flange shaft circlip, replacing, below)
- top up transmission oil if necessary

Flange shaft circlip, replacing

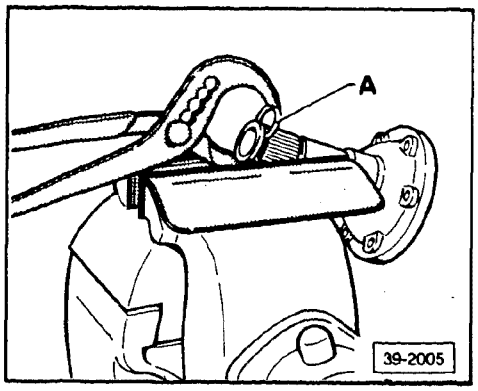

Replace the flange shaft circlip before installing the flange shaft.

- clamp flange shaft in vice
- place opening of new circlip **A** over opening of old circlip in groove
- press circlip into groove with pliers while also pressing old circlip out

cardiagn.com

Driveshaft flange oil seal, replacing

(with transmission installed)

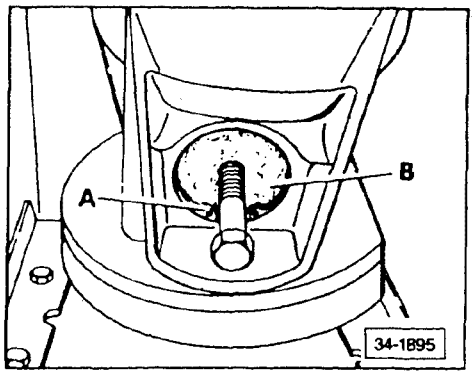

- remove drive shaft — see page 39.5
- place oil pan under vehicle
- remove snap ring **A**
- thread M8 bolt into cover cap **B** and remove cover cap. Do not damage rubber seal

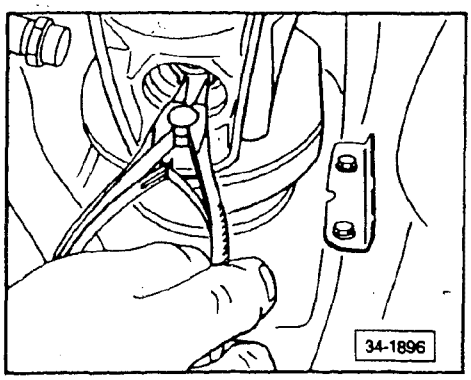

- remove flange shaft snap ring and flange shaft

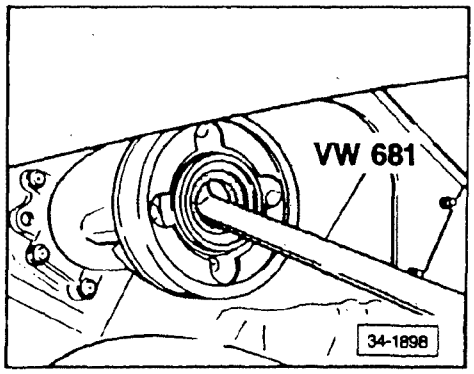

- remove oil seal with **VW 681**

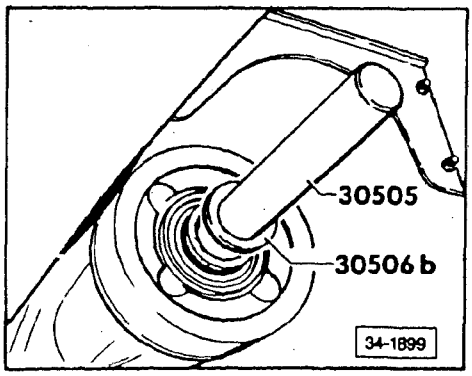

- install oil seal with **30-506b** and **30-505**
- install flange shaft
- check transmission oil, refill if necessary
- install drive shaft

cardiagn.com

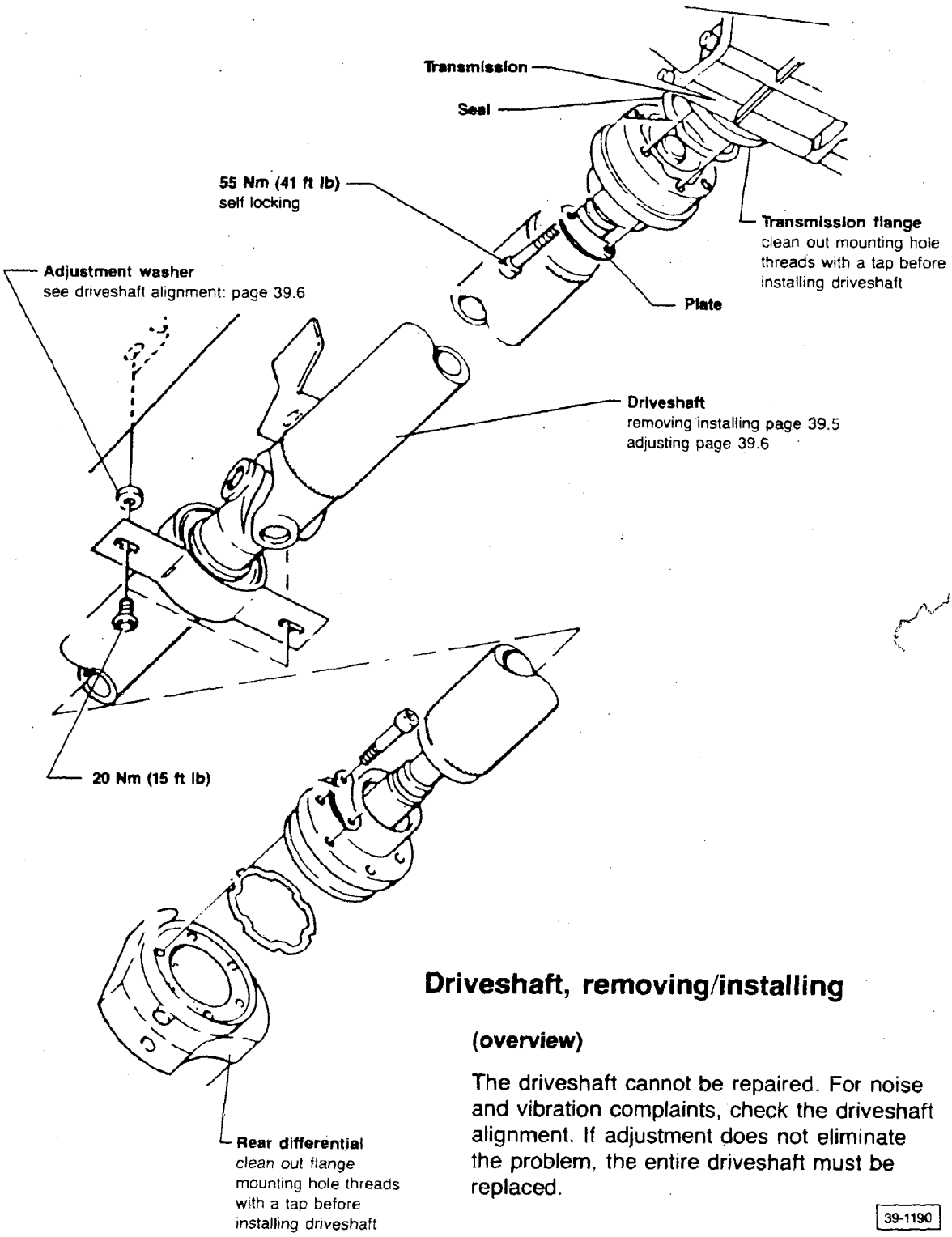

Driveshaft, removing/installing

(overview)

The driveshaft cannot be repaired. For noise and vibration complaints, check the driveshaft alignment. If adjustment does not eliminate the problem, the entire driveshaft must be replaced.

39-1190

cardiagn.com

Removing/Installing Driveshaft (Vehicles With Airbag)

Vehicles equipped with an airbag system have a front driveshaft section made of carbon fiber.

The new driveshaft has variations in diameter which makes the installation and adjustment procedure different from that of the previous Quattro driveshaft.

Use the following procedure when removing/installing driveshafts with a carbon fiber front section.

Driveshaft, removing/installing

- raise vehicle on a hoist with sufficient clearance for driveshaft work
- remove catalytic converter and exhaust pipe
- tie exhaust system over to right side
- loosen driveshaft bolts at transmission, rear differential and center support

Note

The driveshaft must be spaced away from the driveshaft alignment tool **3139**. Choose one of the following two methods to accomplish the required spacing.

Square tubing spacer (Method No. 1)

- fabricate a spacer from 34 x 34 mm square steel tubing (1-11/32 in.)

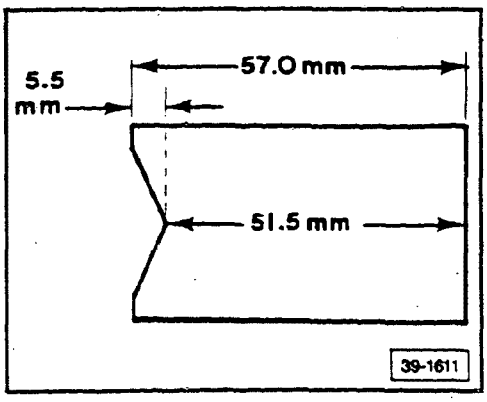

cardiagn.com

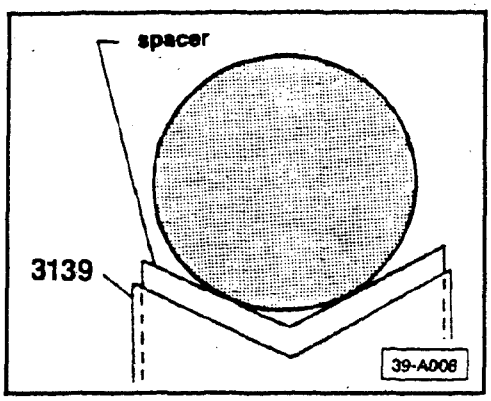

- insert fabricated spacer in rear V-block of driveshaft alignment tool **3139** (end opposite arrow embossed on tool)
  - spacer inserted in alignment tool will raise alignment surface 11.5 mm
- install alignment tool **3139** to driveshaft
  - tool must be installed with embossed arrow facing rear of vehicle

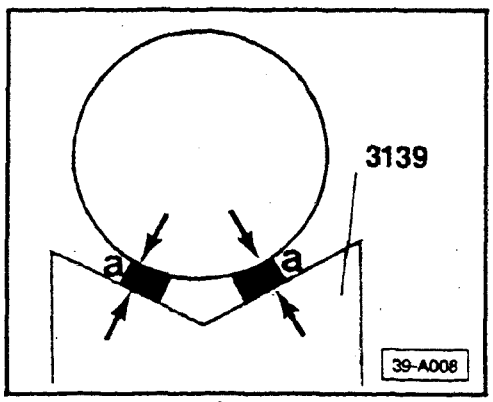

Shim spacer (Method No. 2)

- mount alignment tool **3139** to driveshaft using 11.5 mm shim stock installed between front of driveshaft and rear V-block of tool
  - **a** = 11.5 mm
  - tool must be installed with embossed arrow facing rear of vehicle

> **CAUTION**
>
> White dot on rear driveshaft flange must be aligned with black dot on rear differential flange when installing driveshaft. If paint dots are not visible, mark driveshaft and differential flange before disassembly.

- remove driveshaft attaching bolts at rear differential and transmission
- support driveshaft and tool and remove center support bolts
- remove driveshaft and tool together
- install in reverse order

> **CAUTION**
>
> Do not bend driveshaft. Store and transport driveshaft and tool together.

Note

Always check driveshaft alignment after installation.

cardiagn.com

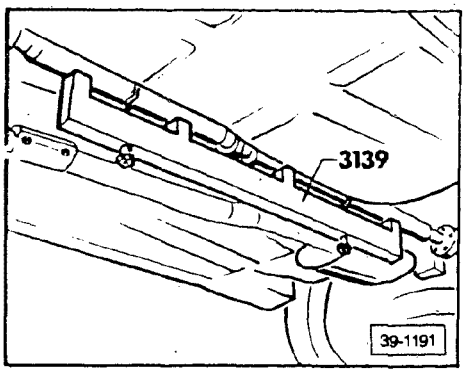

Driveshaft, removing/installing

Driveshaft work must be performed with the vehicle on a dual support hoist.

- remove catalytic converter and exhaust pipe
- tie exhaust system to right side
- loosen driveshaft bolts at transmission, rear differential and center support

- install tool **3139** on driveshaft and tighten plastic nuts

> **CAUTION**
>
> White dot on rear driveshaft flange must be aligned with black dot on rear differential flange when installing driveshaft. If paint dots are not visible, mark driveshaft and differential flange **before** disassembly.

- remove driveshaft attaching bolts at rear differential and transmission
- support driveshaft and tool and remove center support bolts
- remove driveshaft and tool together

Install in reverse order.

Note

Do not bend driveshaft. Store and transport driveshaft only in parallel position.

Tightening torques

Driveshaft to transmission	55 Nm (40 ft lb)
Driveshaft to differential	55 Nm (40 ft lb)
Center support to body	20 Nm (14 ft lb)

- always check driveshaft alignment after installation

cardiagn.com

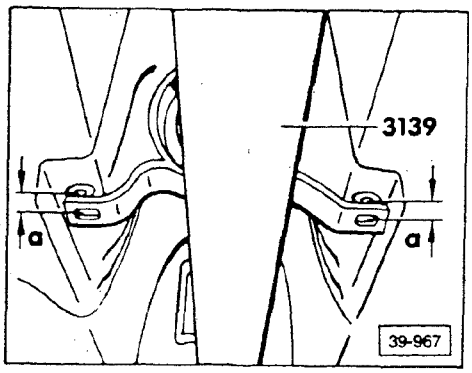

Driveshaft, adjusting

Precise adjustment is required for smooth, quiet operation.

- remove exhaust pipe and catalytic converter: page 34.3
- tie exhaust system to right side
- loosen driveshaft center support bolts
- install tool **3139** and tighten plastic nuts
- remove center support mounting bolts and adjustment washers
- measure distance **a**, clearance must be equal on both sides. Select adjustment washers from following chart

Washers

Distance a mm	Thick-ness mm	Part Number
0-3	—	—
3.1-5	2	857 521 143
5.1-7	4	857 521 143 A
7.1-9	6	857 521 143 B
9.1-11	8	857 521 143 C
11.1-13	10	857 521 143 D

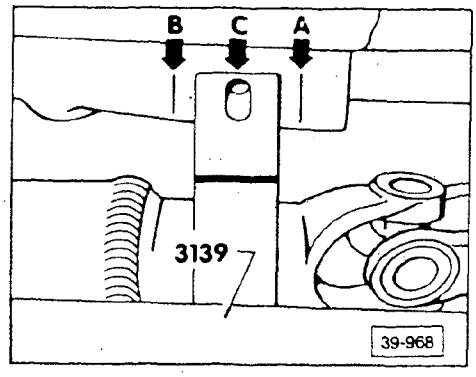

Driveshaft, determining center position

- push driveshaft with tool **3139** rearward to stop
- mark the position of support bracket on body (**arrow A**)
- push driveshaft with tool **3139** toward the front of the car
- mark the position of support bracket on body (**arrow B**)
- center driveshaft support bracket between two marks (**arrow C**)
- install bolts and previously determined washers, tighten to 20 Nm (14 ft lb)
- remove tool **3139**
- install exhaust pipe and catalytic converter

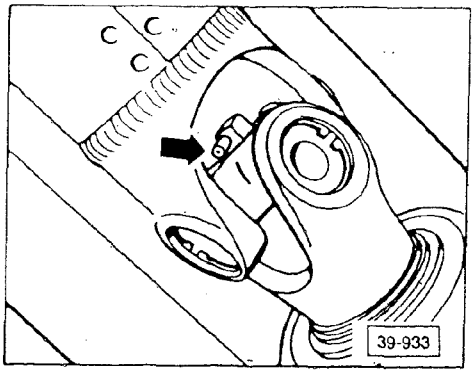

Driveshaft center universal joints, lubricating

- lubricate center universal joint (**arrow**) with lithium base grease

cardiagn.com

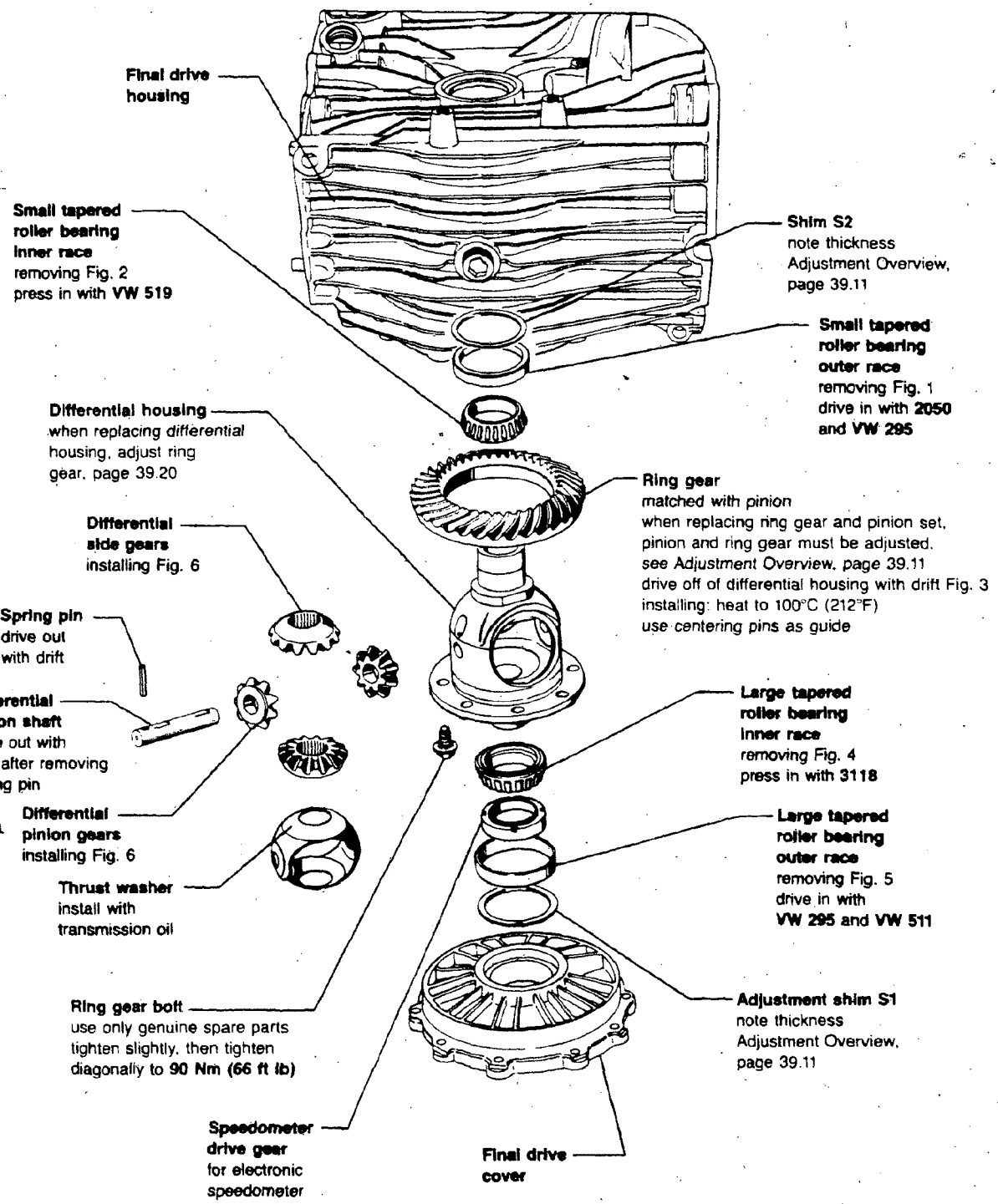

cardiagn.com

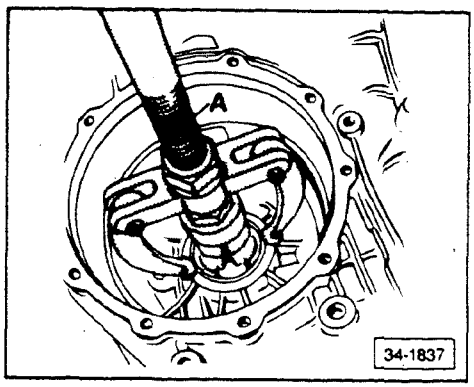

▶ **Fig. 1 Small tapered roller bearing outer race, removing**

- remove with puller and holder **A**, e.g. **Kukko 21/7** = 46 mm-56 mm and **Kukko 22/2** or drive out with **3138**

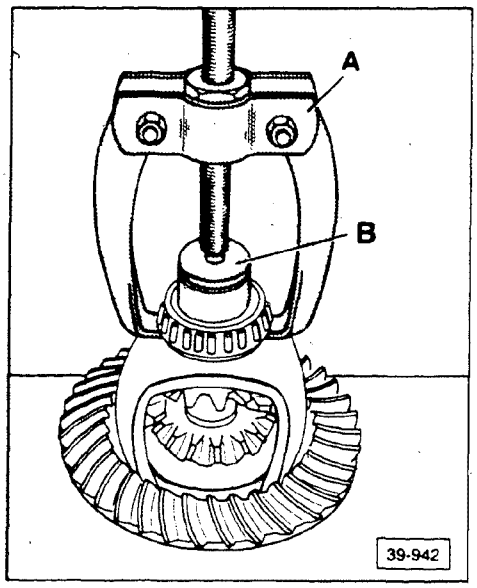

▶ **Fig. 2 Small tapered roller bearing inner race, removing**

A — puller **(Kukko 204/2)** with **VW 447H** or use **Kukko 20/10** with **VW 295a**

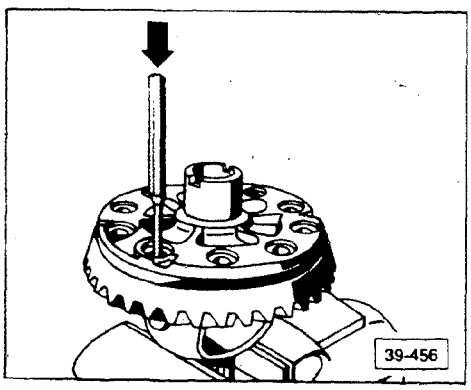

▶ **Fig. 3 Ring gear, driving out of housing**

cardiagn.com

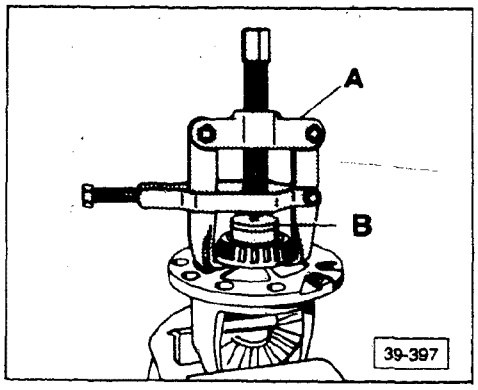

▶ **Fig. 4 Large tapered roller bearing inner race, removing**

A — puller e.g. **Kukko 204/2** with **VW 447H** or use **Kukko 20/10** with **VW 295a**

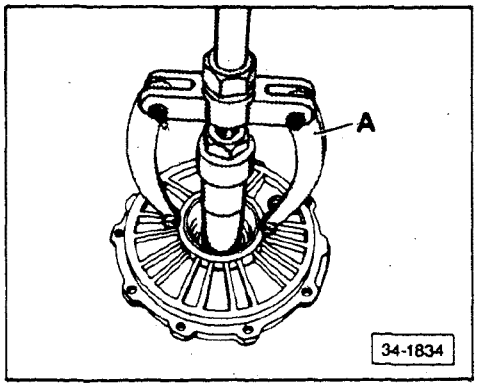

▶ **Fig. 5 Large tapered roller bearing outer race, removing**

- remove with puller and holder **A**, e.g. **Kukko 21/7** = 46 mm-56 mm and **Kukko 22/2** or press out with **3138**

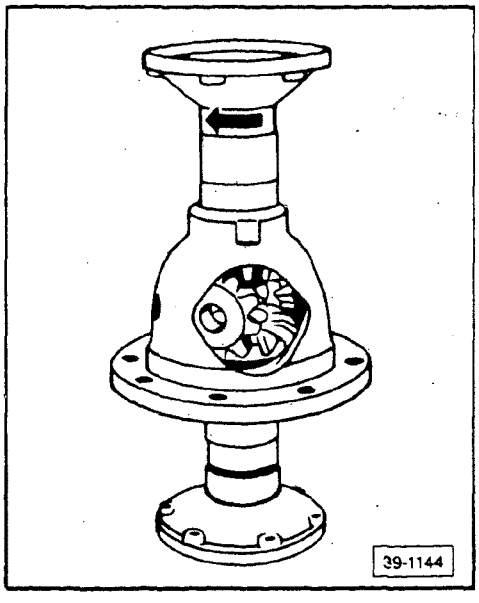

▶ **Fig. 6 Differential pinion/side gears, installing**

- install thrust washer with transmission oil
- install side gears
- install drive flanges without circlip
- install pinion gears turned 180° (1/2 turn) and position by turning drive flange
- align thrust washer and pinion gears
- drive in pinion shaft spring pin

cardiagn.com

Pinion and ring gear, adjusting

General instructions

For long service life and quiet operation of the final drive, careful adjustment of the pinion with hollow shaft and ring gear is essential. Pinions and ring gears are paired during manufacture and inspected with special test machines for best positioning of the contact surface and quiet operation in both turning directions. The position for maximum quiet operation is determined by sliding the pinion in an axial direction, whereby the ring gear is constantly lifted far enough out of engagement (free of play) so that the backlash comes within the specified tolerance.

Deviation **r** related to master gage **Ro** is measured on the outer circumference of the ring gear with ring gear and pinion sets supplied as replacement parts. Every ring gear and pinion set must only be replaced as a set.

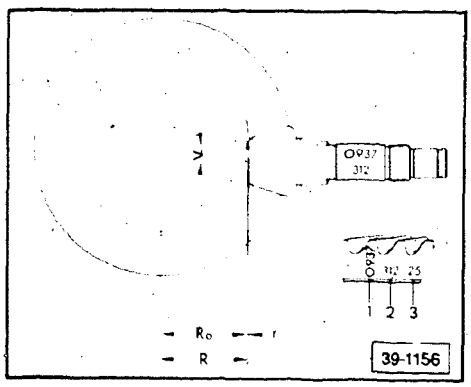

Ring gear/pinion set identification

Service parts, ring gear/pinion sets

1 — Code **0937** means Oerlikon ring gear/pinion set with tooth ratio 37 : 9 (4.11 : 1 overall)
2 — Mating number (**312**) of ring gear/pinion set
3 — Deviation **r** related to the master gage of the special test machine used in production. The deviation **r** is always given in 1/100 mm

Example

"25" means **r** = 0.25 mm

Ro — length of master gage used on the special test machine **Ro** = 54.95 mm
R — actual measurement between ring gear axis and face side of pinion at the point of quietest operation for this one ring gear/pinion set
Vo — hypoid offset

cardiagn.com

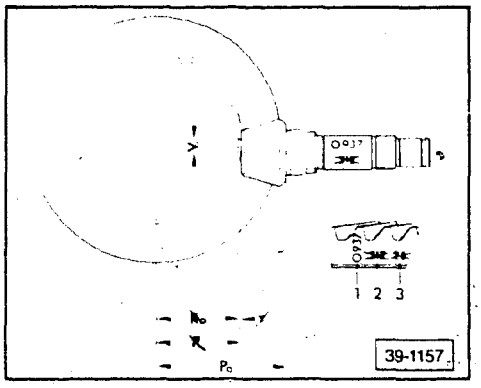

Production ring gear/pinion sets

X — this data is not needed in production
Po — adjusting dimension for production

> **CAUTION**
>
> In production, the position of the pinion is determined using the dimension **Po** (center of ring gear to rear side of pinion head). The identification of the deviation **r** on the ring gear and the mating number is eliminated. Because of the missing data on deviation **r** it is necessary to carry out an actual measurement before removing the pinion, when parts are to be replaced which directly affect the installation position of the pinion.

Adjustment Overview

During transmission installation jobs, re-adjustment of the pinion with hollow shaft, ring gear or ring gear/pinion set is only required if parts are replaced that **directly** affect the adjustment of the final drive. In order to avoid unnecessary adjustment jobs, note the following table.

To be adjusted / Part replaced	Ring gear (S1 + S2) see page 39.20	Pinion (S3 + S4) by deviation r see page 39.13	Pinion (S3 + S4) by actual measurement see page 39.12	Pinion only shim S4 see page 39.19
Transmission/gear carrier housing*	X		X	
Transmission cover housing				X
Differential housing	X			
Pinion and hollow shaft tapered roller bearing			X	
Differential tapered roller bearing	X			
Ring gear/pinion set	X	X		
Differential cover	X			

*If gear carrier housing is replaced, the main shaft must also be adjusted, see Repair Group 35 — Main shaft, adjusting

cardiagn.com

Pinion installation position, determining

(actual measurement)

This procedure is only to be carried out if dimension **r** is not given on the ring gear and/ or parts have to be replaced which directly influence the position of the pinion. These parts are:
Pinion double tapered roller bearing
Hollow shaft tapered roller bearing
Hollow shaft
Gear carrier housing

Differential, removing

- assemble universal measuring bar as described on page 39.16
- install in final drive housing
- measure differential to **Ro** (maximum reading, read from red number range) and note reading
  - the value obtained corresponds to the dimension **r**
- after replacing parts, adjust pinion as described on page 39.13
  - determined dimension **r** is to be used in determining the **S3** shim

cardiagn.com

Ring gear/pinion set new adjustment sequence

If the pinion and ring gear have to be adjusted, the following sequence is to be used:

- determine total shim thickness **S total (S1 + S2)** for preload according to specification of tapered roller bearing/ differential gear
- determine total shim thickness **S total (S3 + S4)** for preload according to specification of tapered roller bearing/pinion with hollow shaft
- distribute total shim thickness **S total** between **S3** and **S4** so that dimension from the center of the ring gear to face side of pinion corresponds to installation dimension **R** determined during production
- distribute total shim thickness **S total** between **S1** and **S2** so that specified backlash is present between ring gear and pinion

Note

The goal of the adjustment is to reach the point of quietest operation that was determined on the test machine in production.

The greatest possible care and cleanliness are of the utmost importance in all assembly jobs and measurement procedures for a satisfactory result.

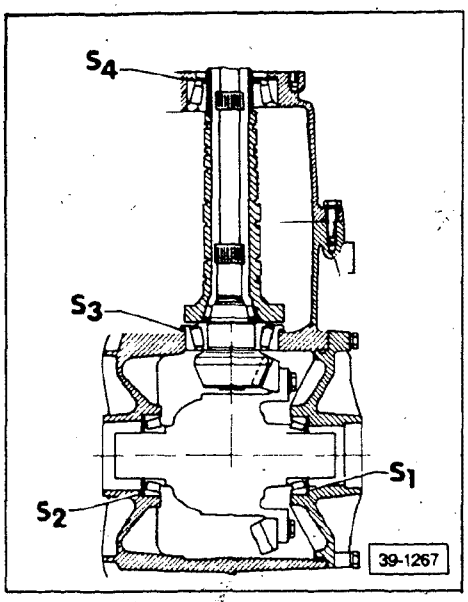

Shim position

S1 — final drive housing cover ring gear shim
S2 — final drive housing ring gear shim
S3 — final drive housing pinion shim
S4 — gear carrier housing pinion shim

cardiagn.com

Pinion, adjusting

(Pinion and hollow shaft)

Readjustment of the pinion, according to the following instructions, is only required if the ring gear/pinion set is replaced. If other parts, which also influence the position of the pinion, are replaced, they must be adjusted to the previously determined installation position. For actual measurement, see page 39.12, also see Adjustment Overview, page 39.11.

Total shim thickness S total (S3 + S4), determining

(Preload of tapered roller bearing/pinion with hollow shaft, adjusting)

- install bearing outer races into final drive housing and gear carrier housing **without** shims
  - always insert washer (rubber) and pressure plate for measuring the shim thickness as well as determining shim **S4**
- press double tapered roller bearing inner race on pinion and secure — see Repair Group 35 — Pinion and hollow shaft, disassembling/assembling
- place tapered roller bearing circlip on hollow shaft and press on tapered roller bearing — see Repair Group 35 — Pinion and hollow shaft, disassembling/assembling

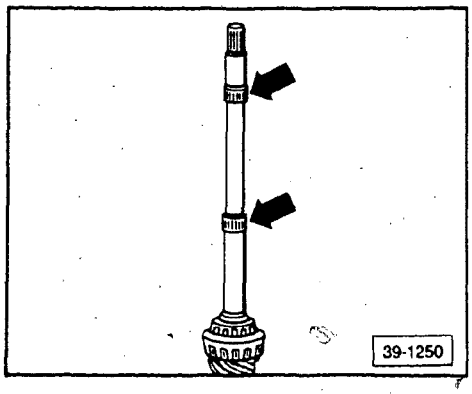

- place needle bearing (**arrows**) on pinion shaft and install hollow shaft
- place pinion with hollow shaft in final drive housing
- put gear carrier housing on and tighten bolts to 25 Nm (18 ft lb)

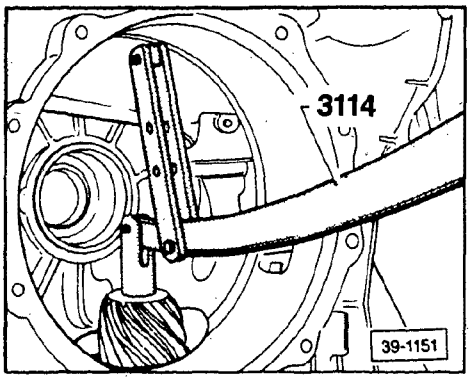

- press on pinion head until bearing outer race lies against gear carrier housing (pinion rearward)
- turn pinion and hollow shaft by hand until bearings are seated

cardiagn.com

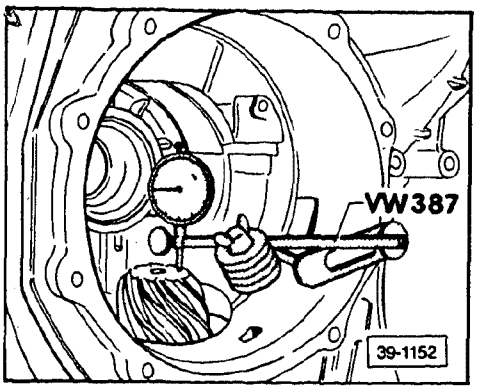

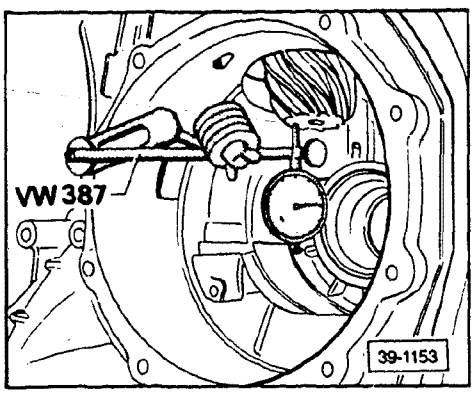

- install measuring tool and zero dial indicator with 1 mm preload
- turn final drive 180° (1/2 turn) so that gear carrier housing points upward
- turn pinion by hand, so that the tapered roller bearing settles

CAUTION

Before measuring, turn the pinion and hollow shaft so that the bearings are seated. Otherwise the measurements will be incorrect.

- read measurement on dial indicator

Example

S total = measurement + preload

Example reading = 1.45	
Preload (constant value)	0.15 mm
Measurement (example)	+ 1.45 mm
S total	= 1.60 mm

Pinion and hollow shaft bearing preload, checking

- use determined total shim thickness to select shim from table on page 39.31
- install shim behind gear carrier housing bearing outer race (**S4** side)
- install gear carrier housing
- turn pinion and hollow shaft to seat bearings

cardiagn.com

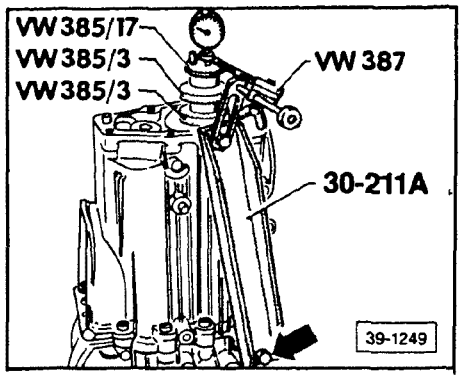

- install measuring tools
- tighten final drive housing bolt (**arrow**)
- zero dial indicator (3 mm measuring range) with 1 mm preload
- loosen gear carrier housing bolts
- if shims were selected properly, the dial indicator should show a reading between 0.08 mm and 0.15 mm

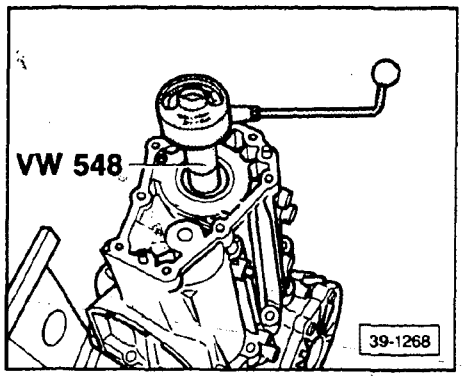

Turning torque, measuring

- leave determined total shim thickness behind the gear carrier housing bearing outer race (**S4** side)
- lubricate bearing with oil
- install gear carrier housing
- measure turning torque of pinion/hollow shaft bearing
  - turning torque range:
    new bearings:
    150-300 Ncm (14-28 in. lb)
    used bearings:
    30-60 Ncm (3-5 in. lb)

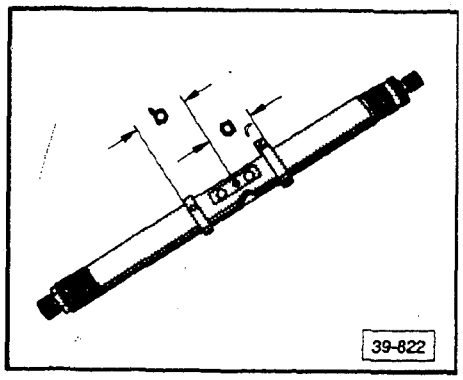

Dimension "e", determining

- leave determined total shim thickness behind final drive cover bearing outer race (**S4** side)
- install gear carrier housing
- turn pinion and hollow shaft several times to seat bearings
- adjust setting ring of universal measuring bar **VW 385/1** to dimension **a** = 35 mm
- set movable setting ring to dimension **b** = 75 mm
- complete universal measuring bar according to illustration
  - measuring gage extension = 6.5 mm long at **Ro** = 54.95 mm

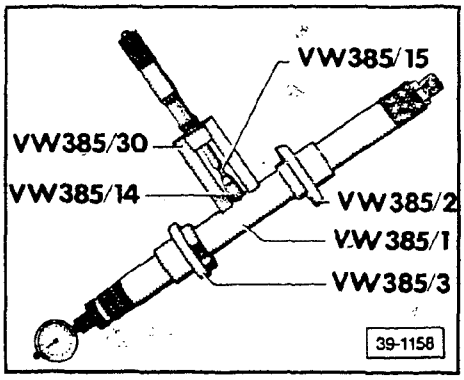

- adjust master gage **VW 385/30** to **Ro** = 54.95 mm
- place master gage on measuring bar
- zero dial indicator (3 mm measuring range) with 1 mm preload

cardiagn.com

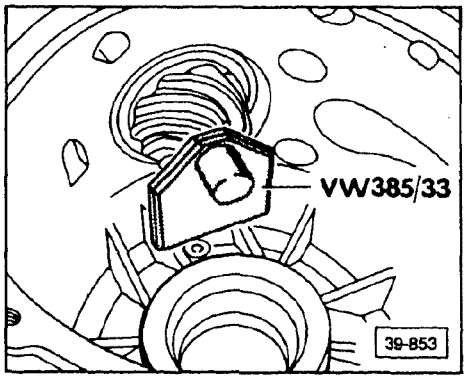

- place end plate **VW 385/33** on pinion head
- remove master gage and install measuring bar in housing
  - centering disc **VW 385/3** faces final drive cover
- install final drive cover and tighten 4 bolts
- pull second centering ring outward until measuring bar can just be turned by hand

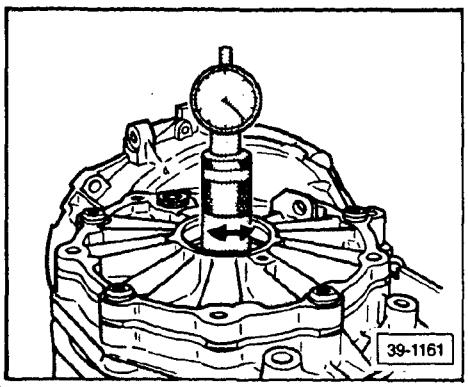

- measure dimension **e** by turning measuring bar until dial gage tip touches end plate on pinion head and shows maximum reading
  - measured value (dimension **e**) is in the black number range

Example

0.46 mm

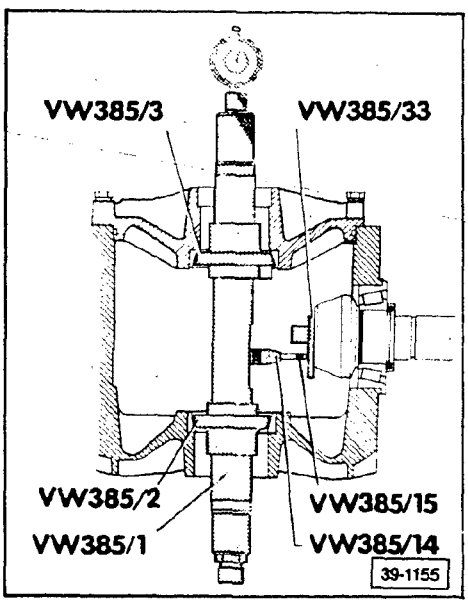

Measuring tools, installation position

- install measuring tools as shown when determining dimension **e**

Shim S3 thickness, determining

S3 = e + r

e = determined value (maximum reading)
r = deviation (given on the ring gear in 1/100 mm or determined during actual measurement)

Example

value **e** read from dial indicator	0.46 mm
deviation **r** printed on ring gear	+ 0.18 mm
shim thickness **S3**	= 0.64 mm

cardiagn.com

Note

Because of the shim tolerances, any thickness can be obtained for **S3**.

Available shims for **S3**:

Thickness (mm)	Part number
0.40	012 311 391
0.45	012 311 391 A
0.50	012 311 391 B
0.55	012 311 391 C
0.60	012 311 391 D
0.65	012 311 391 E
0.70	012 311 391 F
0.75	012 311 391 G
0.80	012 311 391 H
0.85	012 311 391 J
0.90	012 311 391 K
0.95	012 311 391 L
1.00	012 311 391 M
1.05	012 311 391 N
1.10	012 311 391 P
1.15	012 311 391 Q
1.20	012 311 391 R
1.25	012 311 391 S

Shim S4 thickness, determining

Example

S4 = S total – S3

total shim thickness	1.60 mm
shim thickness **S3**	– 0.64 mm
shim thickness **S4**	= 0.96 mm

cardiagn.com

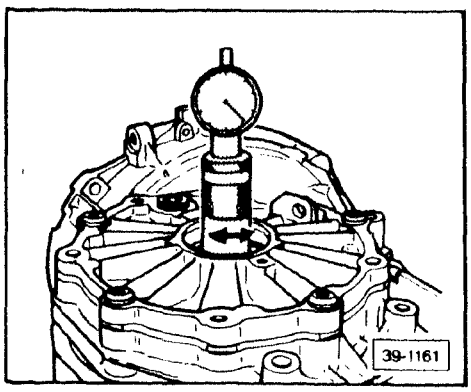

Available shims for **S4**

Thickness (mm)	Part number
0.45	01A 311 393
0.50	01A 311 393 A
0.55	01A 311 393 B
0.60	01A 311 393 C
0.65	01A 311 393 D
0.70	01A 311 393 E
0.75	01A 311 393 F
0.80	01A 311 393 G
0.85	01A 311 393 H
0.90	01A 311 393 J

Note

If the measured shim thickness **S3** or **S4** is greater than those listed in the tables, two shims that total the measured value can be installed.

Dimension r, checking

- install pinion with hollow shaft and shims **S3** and **S4**
- turn in both directions several times
- install universal measuring bar and do measurement check
- if the correct shims have been selected, measuring gage will show the value of the specified deviation r with a tolerance of ± 0.04 mm
  - read measuring gage in counter clockwise direction (red number range)

Gear carrier housing, replacing

Shim S4 thickness, determining

Note

If only the gear carrier housing is being replaced, only shim **S4** needs to be measured.

- clean housing mating surfaces
- place hollow shaft in transmission cover and turn until bearing is seated

cardiagn.com

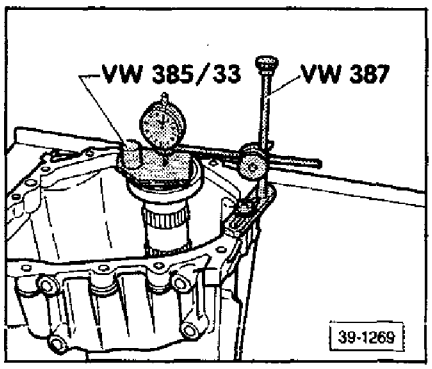

- install measuring tools
- zero dial indicator (3 mm measuring range) with 1 mm preload
- remove holder **VW 387** complete with dial indicator
- remove hollow shaft and bearing outer race with pressure plate, shim, and washer and install in the new transmission cover — see Repair Group 35 — Pinion and hollow shaft, disassembling/reassembling
- place dial indicator with holder **VW 387** on new transmission cover
- read value on dial indicator

Example

preload	1.00 mm
value read	− 0.88 mm
	= 0.12 mm
shim **S4**	0.77 mm
value **x**	+ 0.12 mm
	= 0.89 mm

- select shim according to table on page 39.32
- if value shown on the dial indicator is greater than 1.00 mm, shim **S4** must be reduced by value of **x**
- install gear carrier housing and check preload of pinion and hollow shaft bearing, see page 39.14

Ring gear, adjusting

(differential, adjusting)

Note

Adjustment of the ring gear is required if any of the following parts are replaced:

Final drive housing
Final drive cover
Gear carrier housing
Differential tapered roller bearing
Differential housing
Ring gear/pinion set
See Adjustment Overview, page 39.11

cardiagn.com

Total shim thickness "S total" (S1 + S2), determining

(differential tapered roller bearing preload, adjusting)

Pinion removed

- remove seal and differential bearing outer races
- remove shims (see page 39.7)
- drive bearing outer races **without** shims in to stop (see page 39.7)
- install differential without speedometer drive gear in housing
  - ring gear is on left side (final drive cover side)

- install cover and tighten bolts to 25 Nm (18 ft lb)
- install special tool **VW 521/4** and sleeve **VW 521/8** on final drive housing side of differential housing
  - on smaller differential housing use sleeve **VW 521/7**

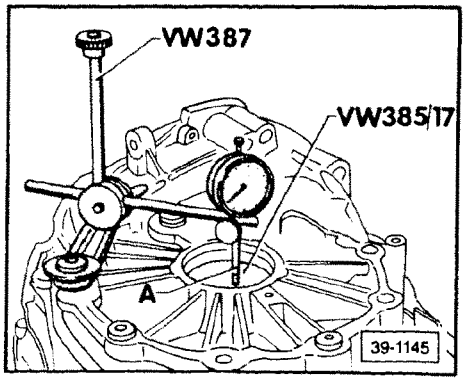

- install measuring tools
- zero dial indicator (3 mm measuring range) with 1 mm preload
  A — dial indicator extension approximately 30 mm long

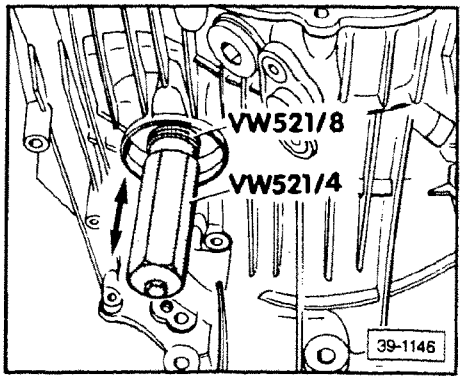

- move differential up and down, read play on dial indicator and write it down

Example

1.42 mm

> **CAUTION**
>
> Do not turn differential during measurement, the bearings will settle and make measurements inaccurate.

(continued)

cardiagn.com

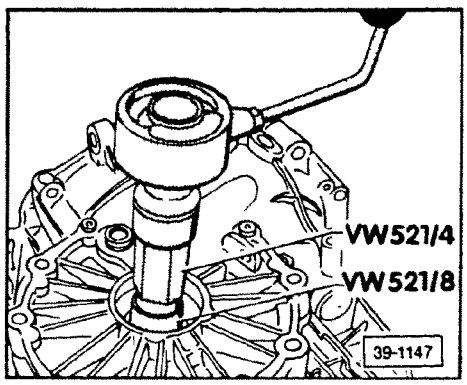

S total (S1 + S2), determining

S total = measurement result + preload

preload (constant value)	0.50 mm
measurement result (example)	+ 1.42 mm
S total	= 1.92 mm

- install determined shim thickness (1.92 mm in the example) behind bearing outer race in the final drive housing (**S2** side)
- select shims according to table, page 39.25

- measure turning torque
  A — torque gage, commercial, 0-600 Ncm (0-54 in. lb)
  - use sleeve **VW 521/7** with smaller differential housing
- lubricate bearings with transmission oil
  - turning torque range:
    new bearings:
    250-350 Ncm (22-31 in. lb)
    used bearings: 60 Ncm (3-5 in. lb)

    *with at least 50 km (31 miles) running time

Backlash, adjusting

Note

The pinion (with shims **S3** and **S4**) and differential (with **S total** = **S1** + **S2**) are installed in the final drive housing
- turn differential several times in both directions to seat bearings

cardiagn.com

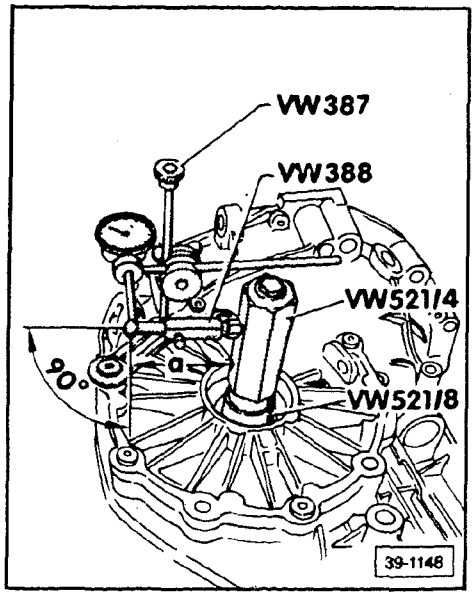

- install measuring tools
- use dial indicator extension **VW 382/10** (6 mm flat)
  - on smaller differential housings use sleeve **521/7**
- set measuring lever **VW 388** to dimension **a**
  - **a** = 67 mm

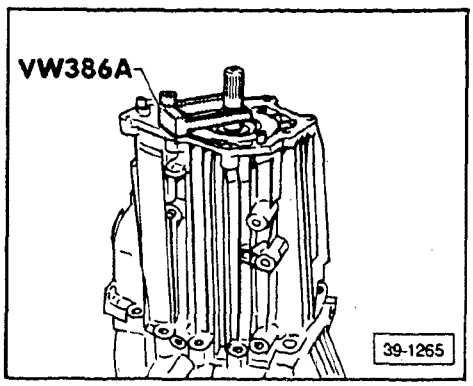

- install clamping device and clamp pinion tightly
- turn ring gear to stop, zero dial indicator
- tighten lock bolt
- turn ring gear back and note backlash value

- loosen clamping device
- loosen lock bolt
- turn the ring gear 90° (1/4 turn)
- tighten lock bolt and clamping device
- turn ring gear back and note backlash value

- repeat measuring procedure 2 more times
- add the four measurements and calculate the average backlash

CAUTION

If the determined individual values vary from each other by more than 0.06 mm, the installation of the ring gear or ring gear/pinion set is not correct. Check installation, if necessary replace ring gear/pinion set.

cardiagn.com

Determination of the average backlash

Example

1st measurement	0.84 mm
2nd measurement	0.85 mm
3rd measurement	0.84 mm
4th measurement	+ 0.83 mm
total	= 3.36 mm

average backlash = 3.36 mm ÷ 4 = 0.84 mm

Shim S2 thickness, determining

(opposite ring gear)

Example

S2 = S total — average backlash + constant value

constant value = 0.15 mm

S total	1.92 mm
average backlash	– 0.84 mm
	= 1.08 mm
constant value	+ 0.15 mm
S2	= 1.23 mm

- the following shims are available for **S2** in the transmission housing:

Thickness (mm)	Part number
0.45	012 409 386
0.50	012 409 386 A
0.55	012 409 386 B
0.60	012 409 386 C
0.65	012 409 386 D
0.70	012 409 386 E
0.75	012 409 386 F
0.80	012 409 386 G
0.85	012 409 386 H
0.90	012 409 386 J
0.95	012 409 386 K
1.00	012 409 386 L

Various tolerances make it possible to pick the exact shim thickness required.

cardiagn.com

Shim thickness S1, determining

(ring gear side)

Example

S1 = S total — S2

S total	1.92 mm
S2	−1.23 mm
S1	= 0.69 mm

Thickness (mm)	Part number
0.45	012 409 385
0.50	012 409 385 A
0.55	012 409 385 B
0.60	012 409 385 C
0.65	012 409 385 D
0.70	012 409 385 E
0.75	012 409 385 F
0.80	012 409 385 G
0.85	012 409 385 H
0.90	012 409 385 J
0.95	012 409 385 K
1.00	012 409 385 L

Note

Various tolerances make it possible to pick the exact shim thickness required.

- install the shims determined, if necessary use 2 shims
  - **S1** on the ring gear side
  - **S2** opposite the ring gear

Measurement, checking

- measure backlash again four times on the circumference
  - backlash must be **0.12 - 0.22 mm**

CAUTION

The individual measurements may vary a maximum of 0.05 mm from each other.

cardiagn.com

THIS FRAME INTENTIONALLY LEFT

BLANK

cardiagn.com

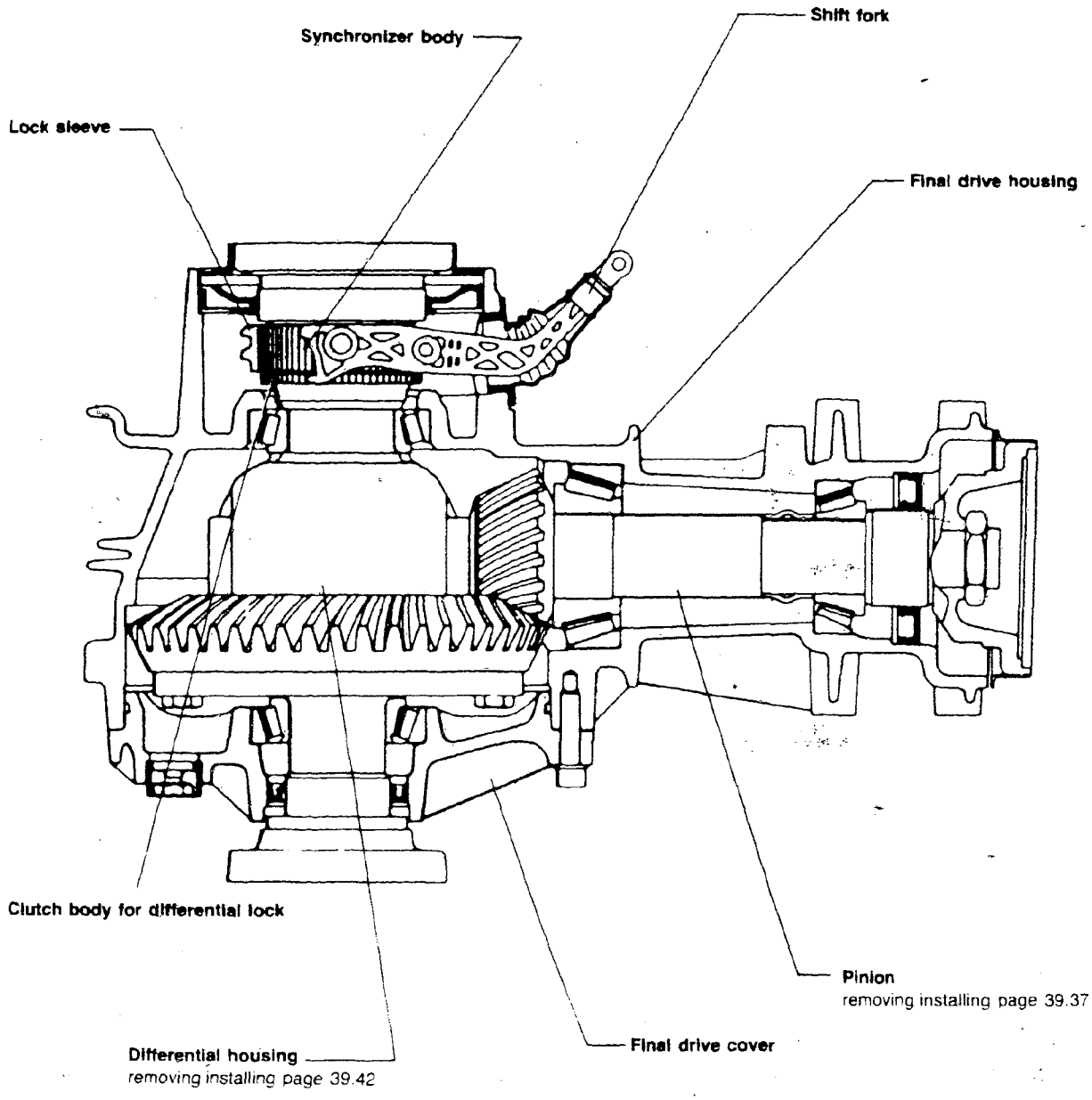

cardiagn.com

Differential flange oil seal, right side, replacing

(with differential installed)

- remove axle shaft
- remove drive flange bolt. Support flange with drift punch
- place oil pan underneath and remove flange
- pry out oil seal with **VW 681**
- drive in new oil seal to stop
- install flange and axle shaft

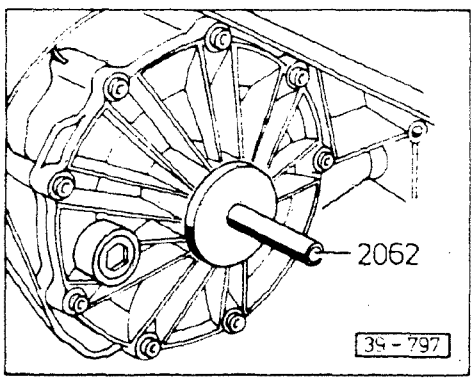

Tightening torques

Flange to differential	25 Nm (18 ft lb)
Axle shaft to flange	45 Nm (33 ft lb)

Differential flange oil seal, left side, replacing

(with differential installed)

- disconnect axle shaft from axle flange and push upward
- unbolt left differential support, lower differential until flange is accessible
- support differential with **VW 1383**

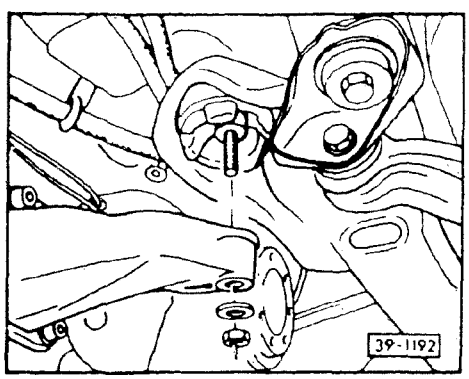

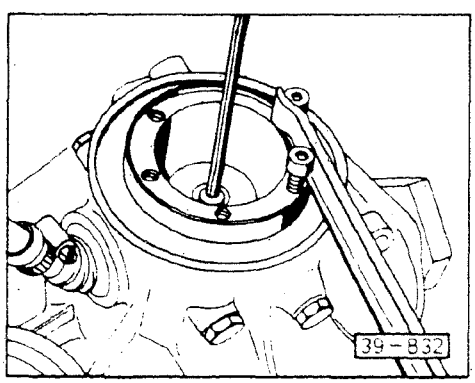

- install two bolts into flange and hold flange with bar. Remove flange bolt
- remove flange

Note

Do not lose adjustment shim between flange shaft and differential gear.

cardiagn.com

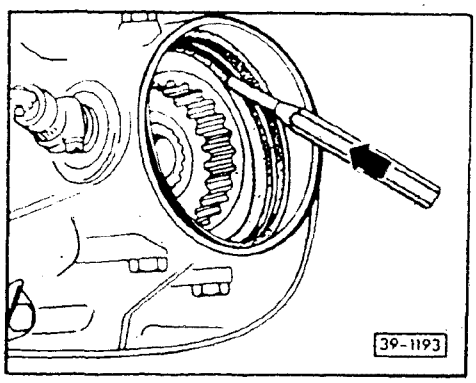

- pry out seal

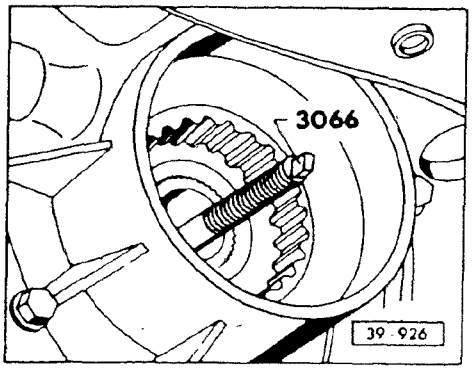

- screw in threaded rod of tool **3066**

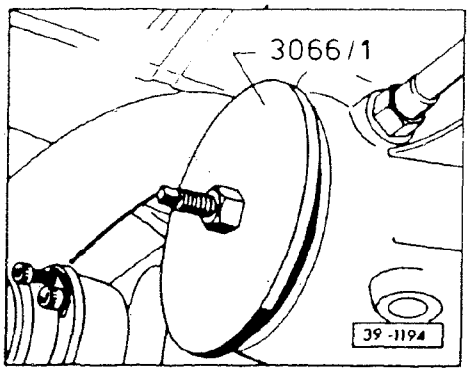

- install new oil seal onto tool **3066/1**
- draw in new oil seal and tighten hex nut up to stop
- be sure lever for differential lock does not interfere with seal during installation
- install flange and shim (lubricate with grease)
- install axle shaft
- reinstall differential support
- check transmission oil level and refill as necessary
  - oil capacity: 2.75 liters (5.8 US pints)
  - type: Hypoid oil, SAE 90 API/GL5 (MIL-L-2105 B)

Tightening torques

Flange to differential	25 Nm (18 ft lb)
Axle shaft to flange	45 Nm (33 ft lb)
Suspension to subframe	45 Nm (33 ft lb)

cardiagn.com

Differential oil seal for driveshaft flange, replacing

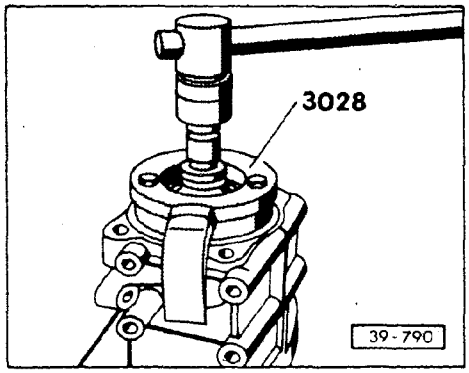

- disconnect driveshaft at differential
- mark position of pinion nut to pinion
- install holder **3028** and remove pinion nut

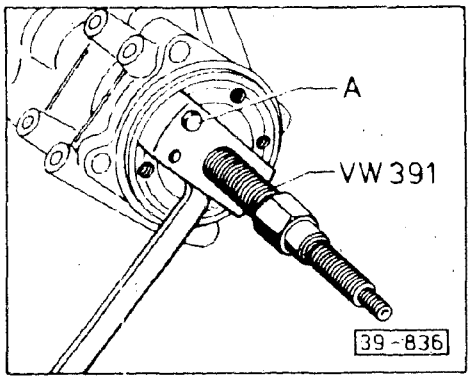

- remove puller flange with puller **VW 391**
  A = Hex head bolt M 8 x 30

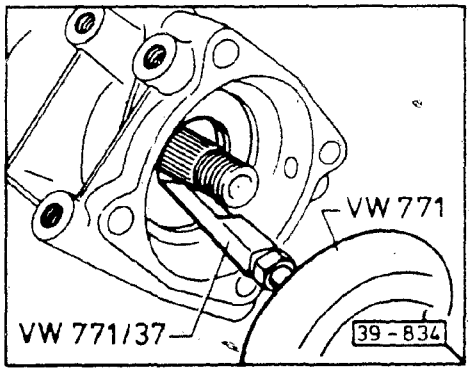

- remove differential oil seal

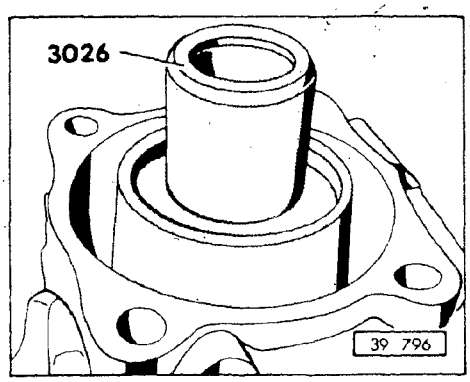

- drive in new oil seal up to stop with tool **3026**

(continued)

cardiagn.com

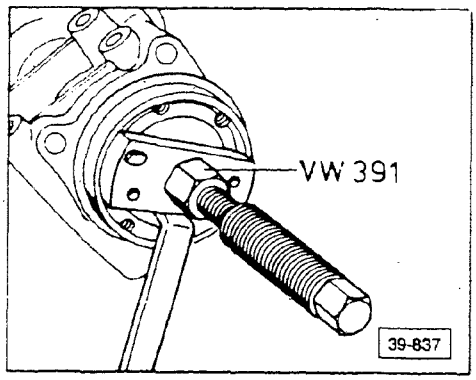

- reinstall pinion flange. Be sure pinion nut and threads are free of oil and grease. Coat threads of nut lightly with locking compound **D 000 600**
- tighten pinion nut exactly to previously marked position
- peen pinion nut collar

Note

Always use the same nut to assure the original installed position is attained.

- install driveshaft and tighten bolts to 55 Nm (40 ft lb)

Rear differential, removing/installing

Removing

- remove differential flange driveshaft bolts and tie driveshaft out of way
- remove and tie up axle shafts
- remove differential lock servo and bracket. See page 34.10
- remove wires for differential lock indicator switch
- remove nut from differential rear mounting bushing (**arrow**)

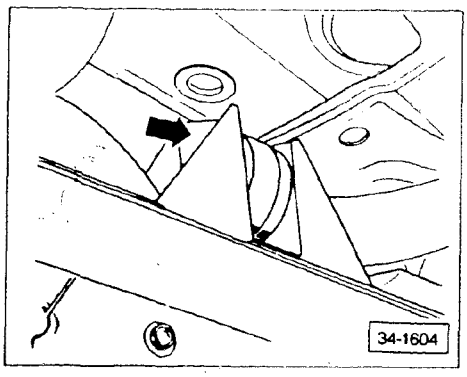

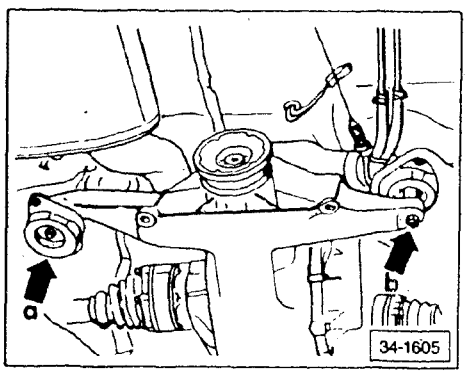

- remove nut **a** and loosen nut **b**

cardiagn.com

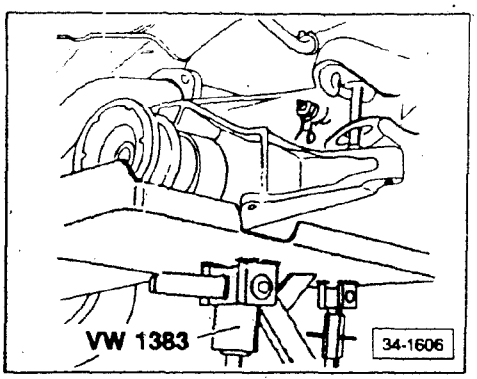

- slightly lift differential with **VW 1383**
- remove rubber bonded bushing on right side

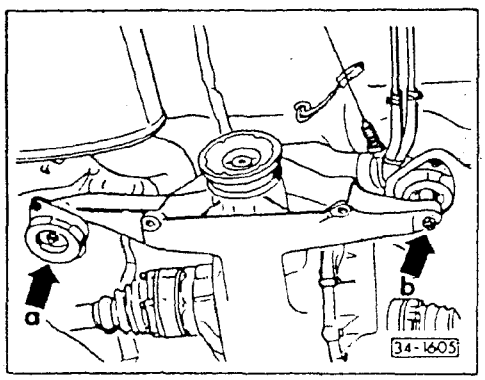

- remove nut **b** and mounting bolt from rear bushing
- push differential forward, then lower carefully

Installing

Installation is in reverse order. Be sure differential is installed without stress.

Tightening torques

Rubber bonded bushing to subframe	25 Nm (18 ft lb)
Differential to bearing/subframe	45 Nm (33 ft lb)
Driveshaft to differential	55 Nm (40 ft lb)
Axle shaft to differential	45 Nm (33 ft lb)

Rubber bonded bushing for rear differential, removing/installing

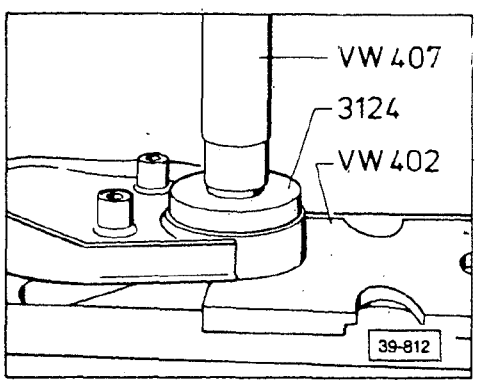

- support differential with **VW 1383**
- remove bolts for rear mounting bracket support
- unbolt bracket from rear differential
- with bracket and support out of car, unbolt from rubber bonded bushing
- press out rubber bonded bushing

cardiagn.com

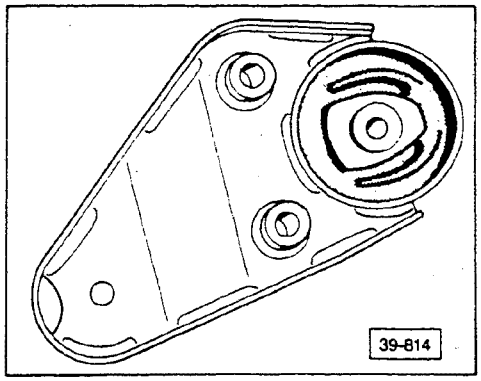

- installed position

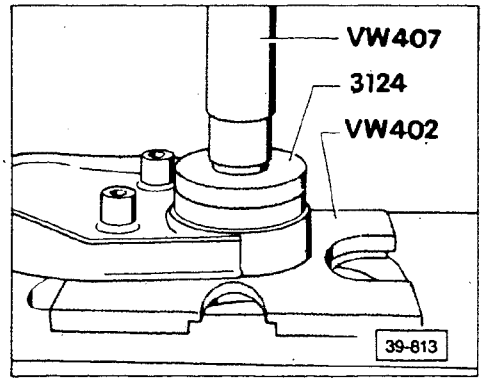

- install bushing exactly as shown
- when installing bushing, position bracket in the center of **VW 402** and press bushing in halfway. Recheck bushing installed position

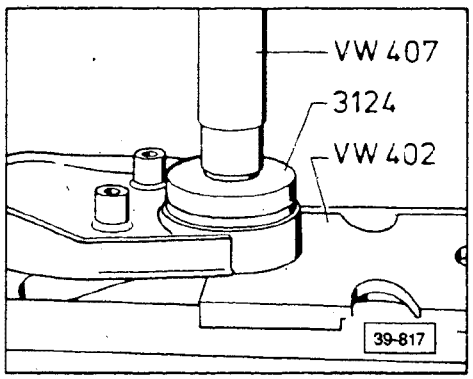

- position bracket with rubber bushing over the largest opening of **VW 402** and press bushing in flush
- bolt bracket and support together and install into vehicle

Tightening torques

Bracket to differential	45 Nm (33 ft lb)
Support to body	80 Nm (59 ft lb)
Bolt for bonded rubber bushing	65 Nm (48 ft lb)

cardiagn.com

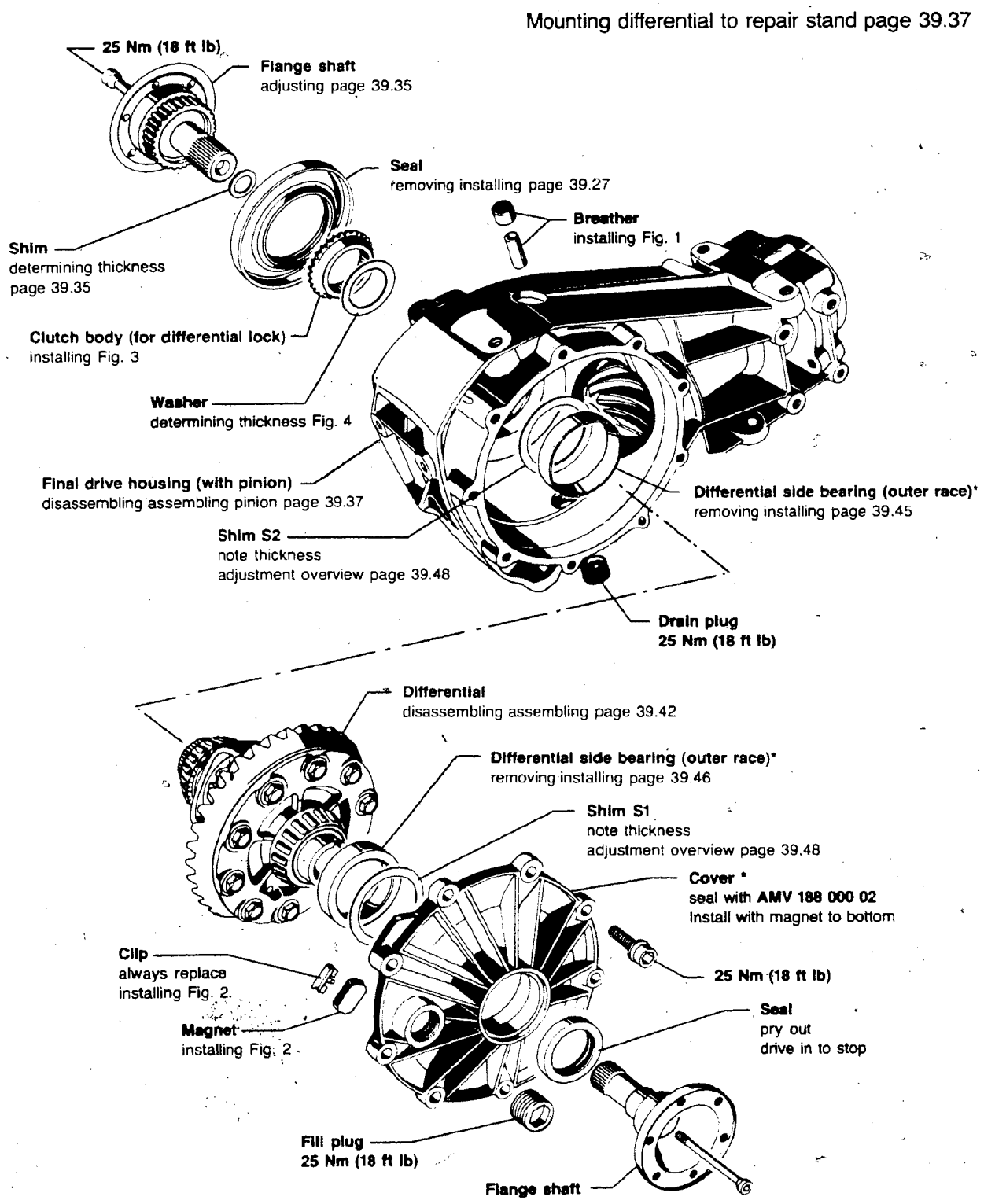

*Adjustments required when replacing these parts. See Adjustment overview page 39.48.

39-1195

cardiagn.com

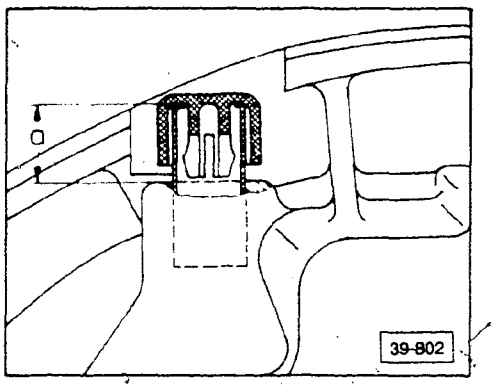

▶ **Fig. 1 Breather, installing**

- **a** = 13 mm (1/2 inch)

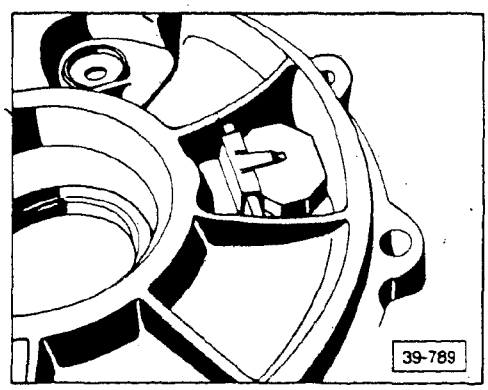

▶ **Fig. 2 Magnet, installing**

- replace clip if removed

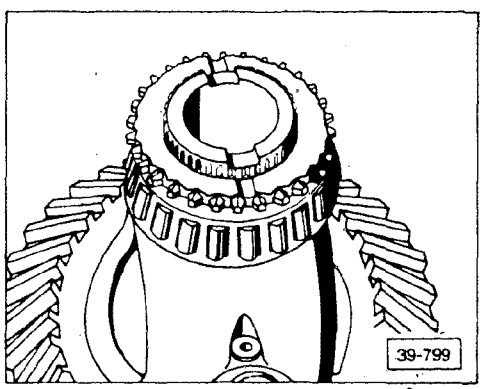

▶ **Fig. 3 Clutch body**

(differential shown removed)

- align oil grooves in clutch body and differential

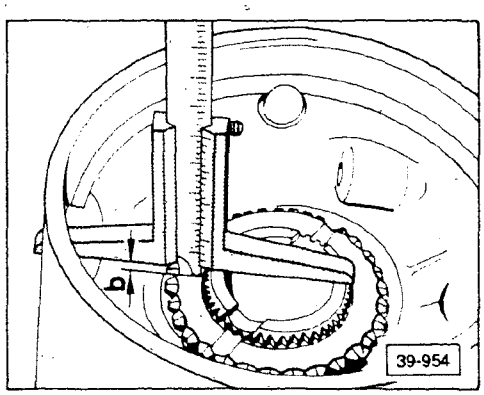

▶ **Fig. 4 Adjustment washer, determining thickness**

- measure dimension **b** and determine shim from chart

Dimension b	Thickness mm	Part Number
under 4.10	—	no washer
4.11 - 4.40	0.3	005 409 737
4.41 - 4.70	0.6	005 409 737 A
4.71 - 4.90	0.9	005 409 737 B

cardiagn.com

Flange shaft, adjusting

The flange shaft must be adjusted if any of the following parts are replaced:

- flange shaft
- differential housing
- differential pinion gears

Note

This adjustment is important to insure smooth shifts and low wear.

- **y** = 0.2-0.5 mm (.008-.019 inch)

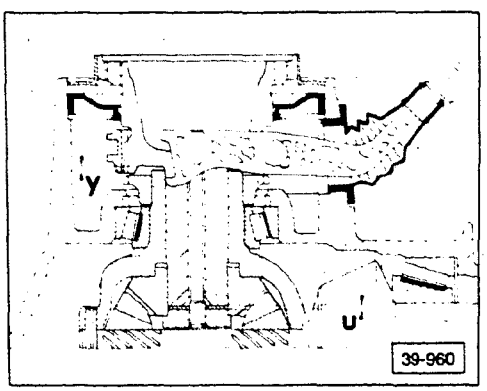

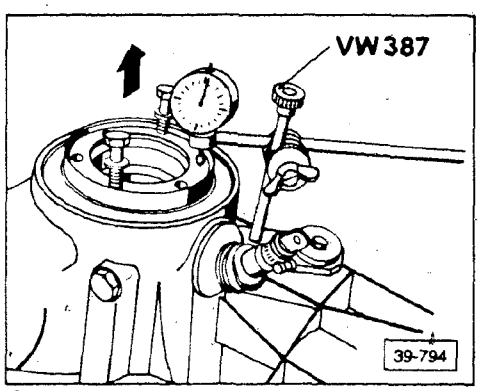

Determining shim "u"

- install flange shaft with original shim and tighten bolt
  - end play should be 0.2-0.5 mm (.008-.019 inch)
- if too much end play, use thicker shim
- if too little end play, use thinner shim
  - available shims

Thickness mm	Part Number
0.3	183 525 293
0.6	183 525 293 A
0.9	183 525 293 B

cardiagn.com

Note

If a new pinion bearing is required, replace both bearings at the same time.

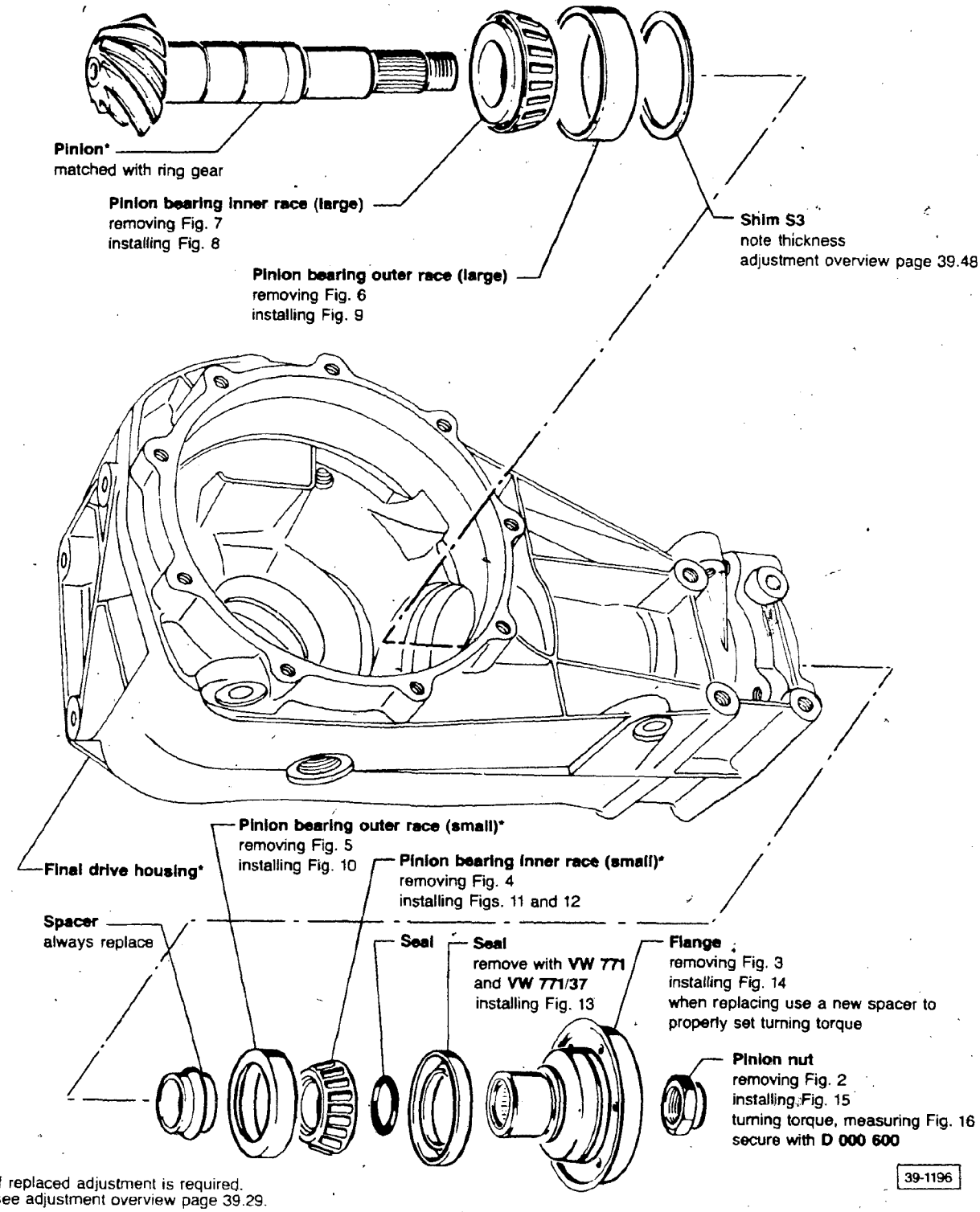

*If replaced adjustment is required, see adjustment overview page 39.29.

cardiagn.com

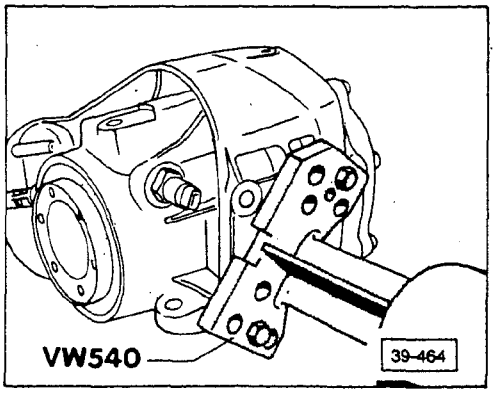

▶ **Fig. 1 Final drive, mounting to repair stand**

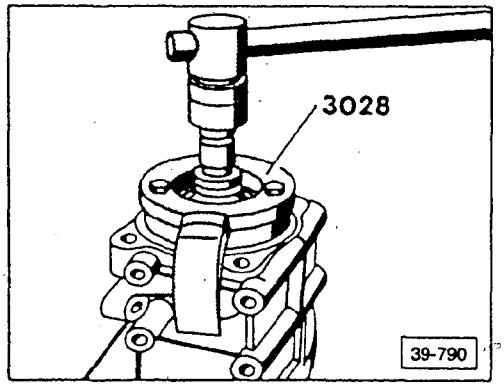

▶ **Fig. 2 Pinion nut, removing**

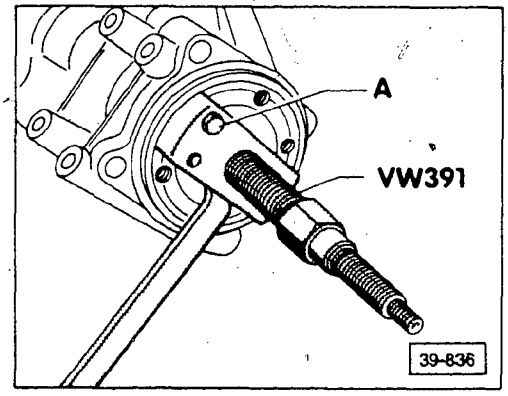

▶ **Fig. 3 Flange, removing**

- **A** = bolt M 8 x 30

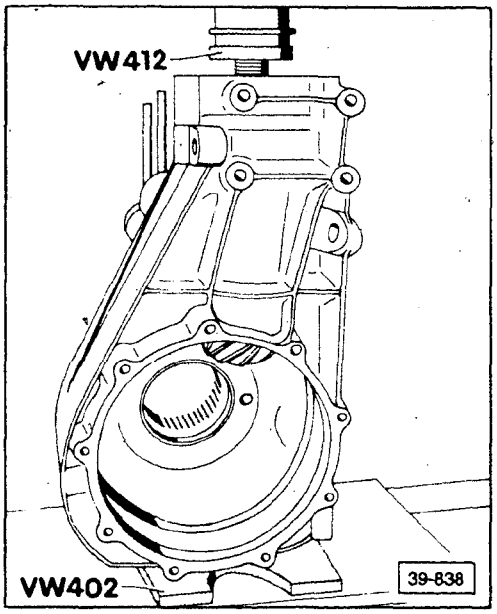

▶ **Fig. 4 Pinion, removing**

- press out of bearing

cardiagn.com

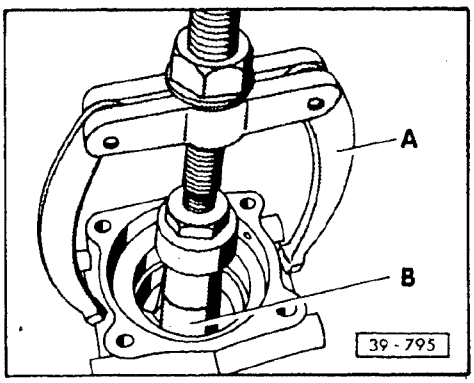

▶ **Fig. 5 Pinion bearing outer race (small), removing**

- **A** = puller e.g. **Kukko 22/1**
- **B** = extractor 46-56 mm e.g. **Kukko 21/7**

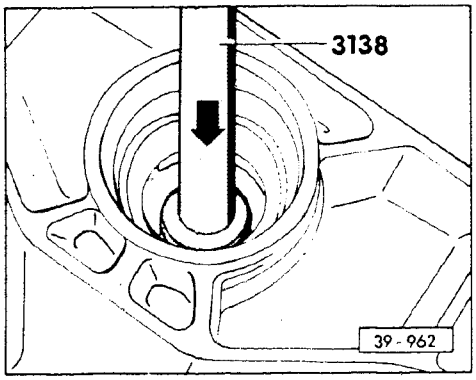

▶ **Fig. 6 Pinion bearing outer race (large), removing**

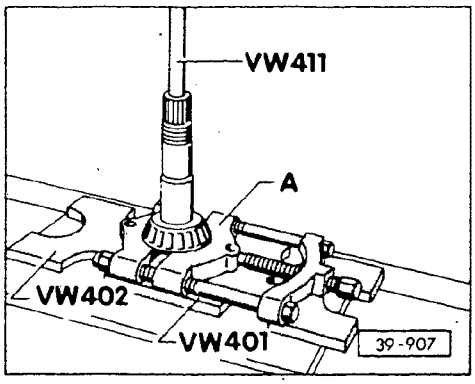

▶ **Fig. 7 Pinion bearing inner race (large), removing**

- **A** = separator 22-115 mm e.g. **Kukko 17/2**

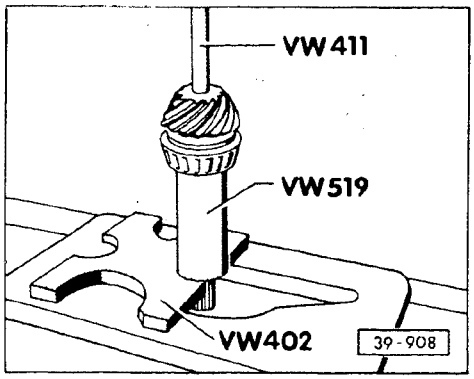

▶ **Fig. 8 Pinion bearing inner race (large), installing**

- heat bearing to approximately 120°C (248°F)

cardiagn.com

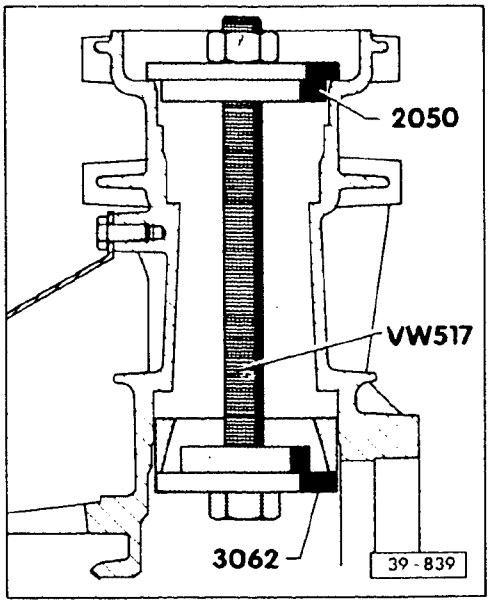

▶ **Fig. 9 Pinion bearing outer race (large), installing**

- place required pinion shims behind race before installing

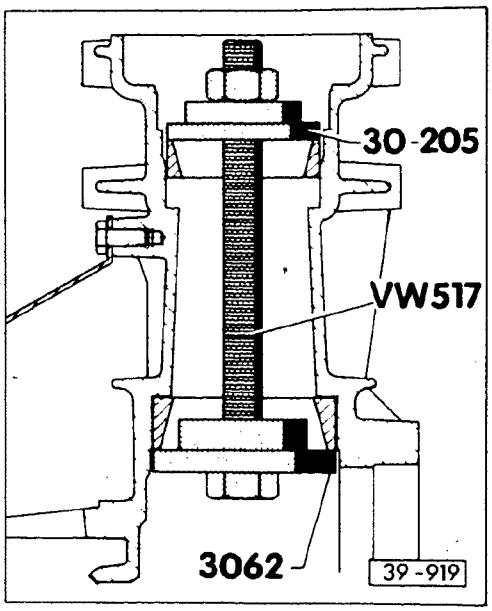

▶ **Fig. 10 Pinion bearing outer race (small), installing**

cardiagn.com

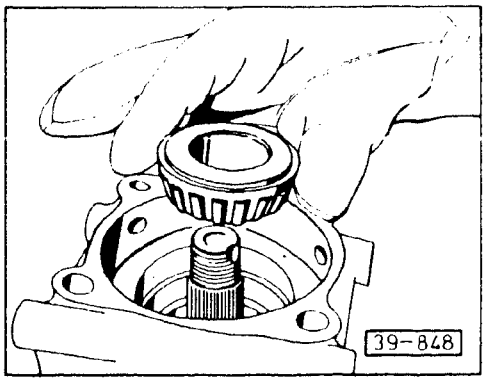

▶ **Fig. 11 Pinion bearing inner race (small), installing**

- insert pinion and new spacer
- heat bearing to 120°C (248°F) and install on pinion

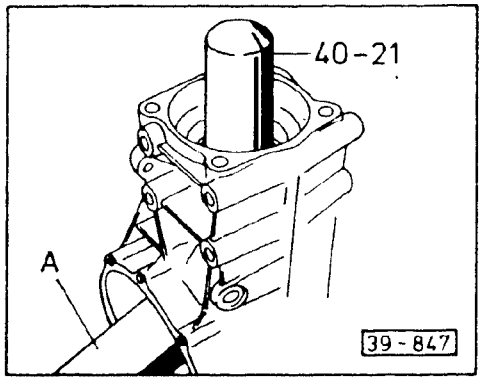

▶ **Fig. 12 Pinion bearing, seating**

- **A** = wood to support pinion

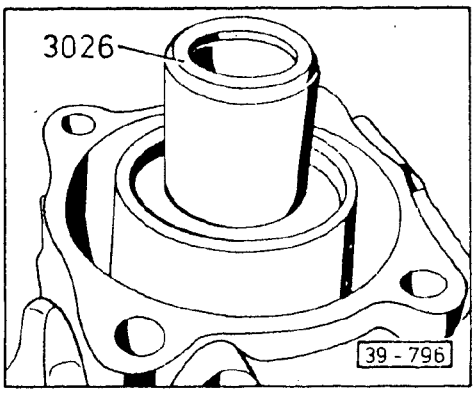

▶ **Fig. 13 Seal, installing**

- drive in to stop

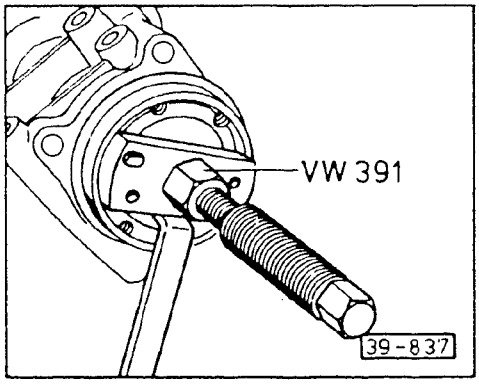

▶ **Fig. 14 Flange, installing**

cardiagn.com

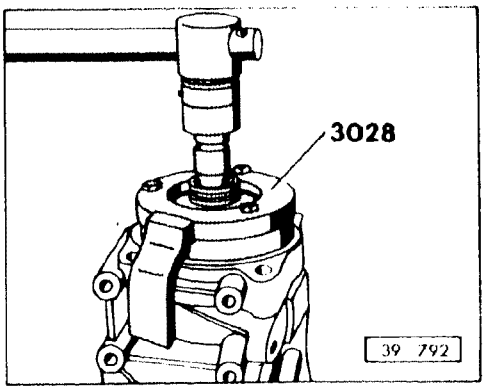

▶ **Fig. 15 Pinion nut, installing**

- measure turning torque, Fig 16

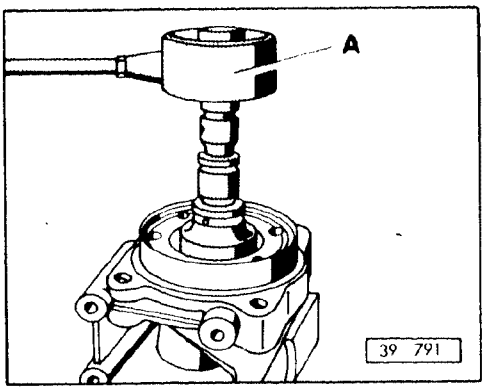

▶ **Fig. 16 Turning torque, measuring**

- **A** = torque wrench 0-600 Ncm (0-60 in. lb. or 0-65 cm kg)

CAUTION

Tighten pinion nut a little at a time and read turning torque frequently. If turning torque exceeds specifications the spacer will have to be replaced. Once the spacer has been compressed it cannot be used again.

Turning torque, specifications

- new bearings = 280-320 Ncm (25-28 in. lb. or 29-33 cm kg)
- used bearings* = 30-60 Ncm (3-5 in. lb. or 3-6 cm kg)

*with at least 50 km (30 miles) running time

cardiagn.com

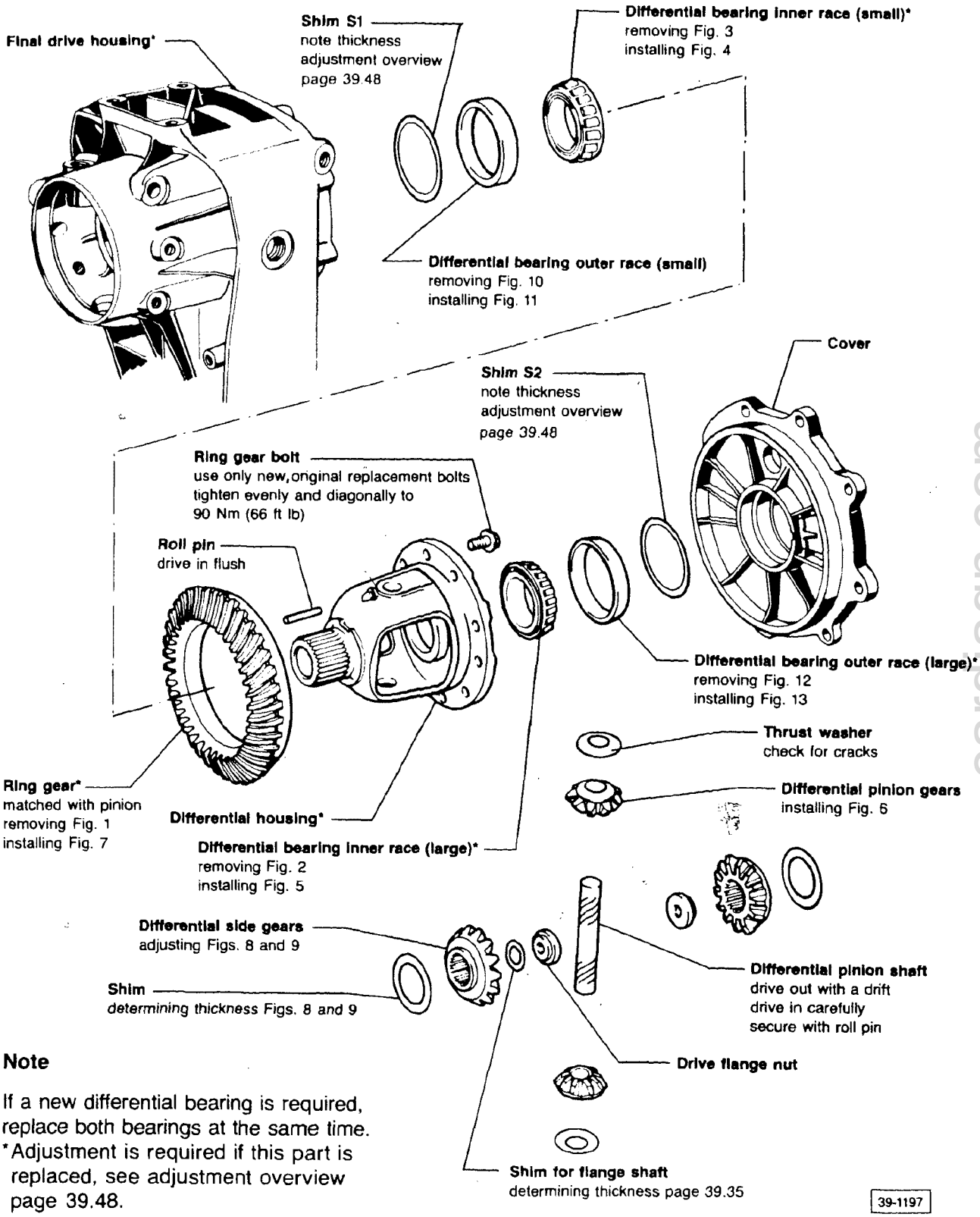

Note

If a new differential bearing is required, replace both bearings at the same time.

*Adjustment is required if this part is replaced, see adjustment overview page 39.48.

carolagn.com

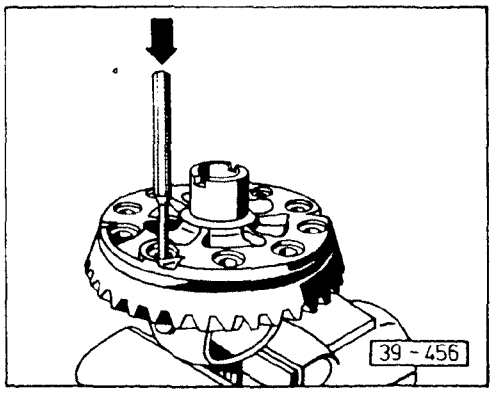

▶ **Fig. 1 Ring gear, removing**

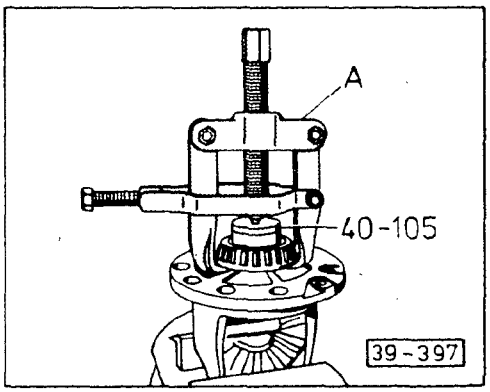

▶ **Fig. 2 Differential bearing inner race (large), removing**

- **A** = puller e.g. **Kukko 204/2**

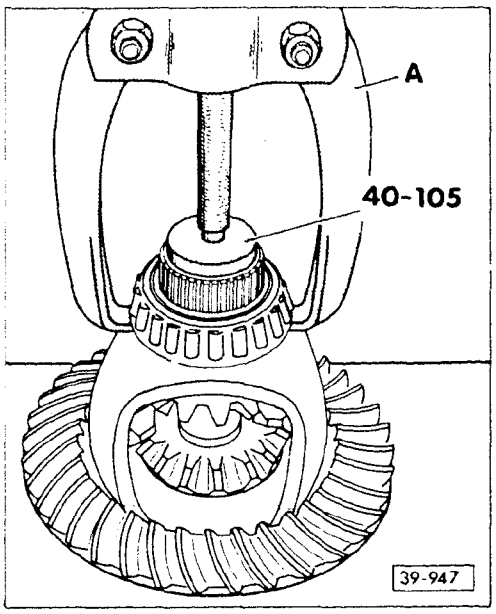

▶ **Fig. 3 Differential bearing inner race (small), removing**

- **A** = puller e.g. **Kukko 44/2**

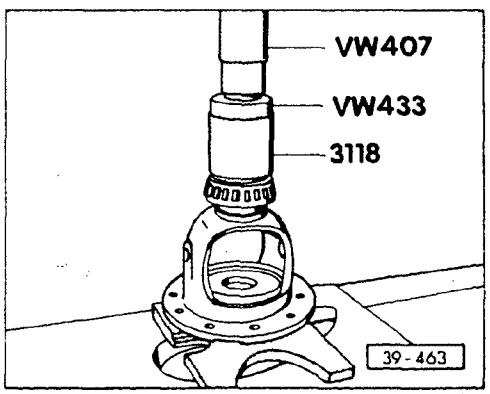

▶ **Fig. 4 Differential bearing inner race (small), installing**

- heat bearing to approximately 100°C (212°F) and press on

cardiagn.com

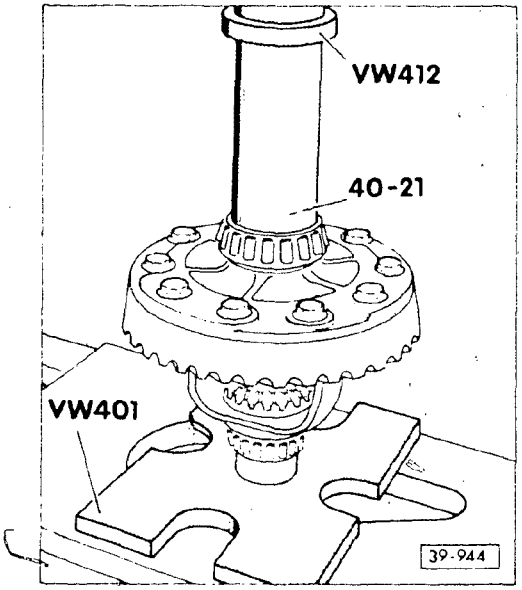

▶ **Fig. 5 Differential bearing inner race (large), installing**

- heat bearing to approximately 100°C (212°F) and press on

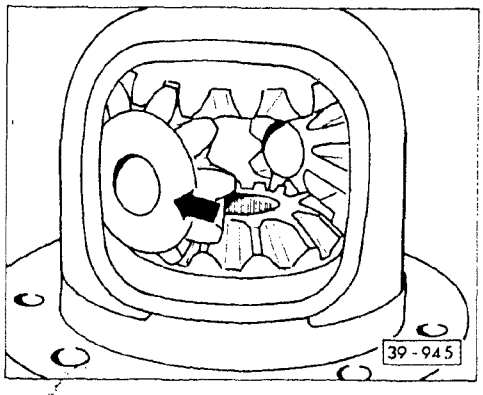

▶ **Fig. 6 Differential pinion gears, installing**

- insert differential side gears with correct adjustment shims (Figs. 8 and 9)
- insert differential pinions in housing approx. 180° apart (coat thrust washers lightly with grease)
- rotate gears into position
- insert drive flange nuts
- align thrust washers
- drive in differential pinion shaft
- secure with roll pin

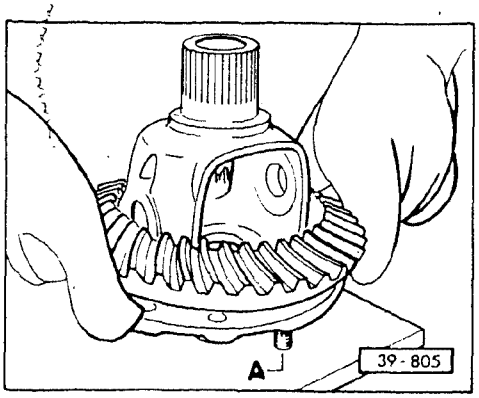

▶ **Fig. 7 Ring gear installing**

- heat to approximately 100°C (212°F) and install
  - **A** = alignment pins

cardiagn.com

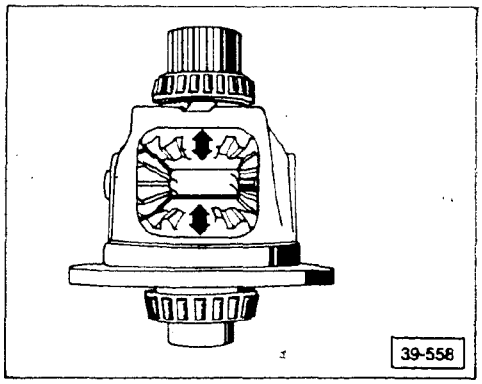

▶ **Fig. 8 Differential pinion gears, installing**

- insert differential side gears with 0.5 mm (0.019 inch) shims
- insert differential pinion gears with thrust washers
- drive in differential pinion shaft
- hold differential pinion gears outward and check the clearance of the side gears (**arrows**)
- adjust clearance by changing shims
  - maximum clearance 0.10 mm (0.004 inch)

Note

The clearance is **OK** when you feel no play and the differential pinion gears can be turned slightly without catching (Fig. 9).

- available shims

Thickness mm	Part Number
0.5	011 519 215
0.6	088 409 249
0.7	088 409 249 A
0.8	088 409 249 B
0.9	088 409 249 C
1.0	088 409 249 D

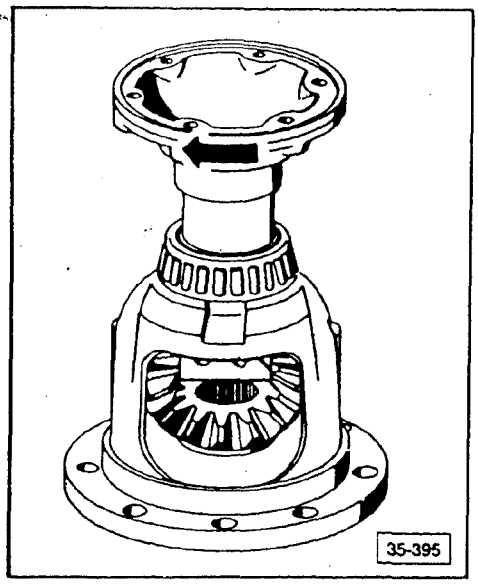

▶ **Fig. 9 Differential pinion gears, turning**

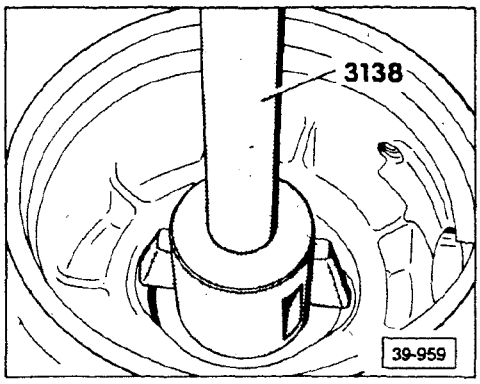

▶ **Fig. 10 Differential bearing outer race (small), removing**

- drive race out of final drive housing

cardiagn.com

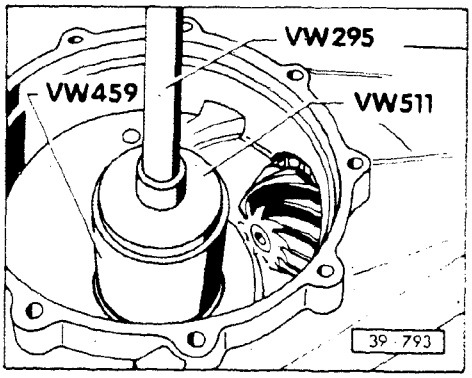

▶ **Fig. 11 Differential bearing outer race (small), installing**

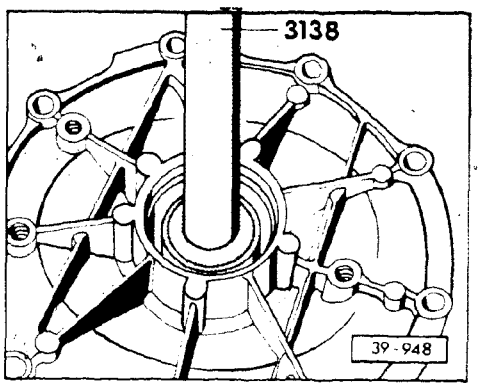

▶ **Fig. 12 Differential bearing outer race (large), removing**

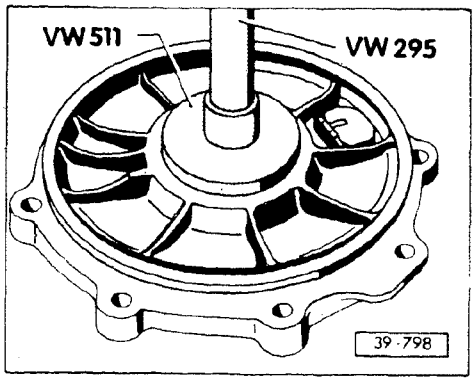

▶ **Fig. 13 Differential bearing outer race (large), installing**

- press in with **VW 511** and **VW 295**

cardiagn.com

Ring gear/pinion, adjusting

Careful adjustment of the ring gear and pinion is important to ensure that the final drive gives long service and runs quietly. The ring gear and pinion may only be replaced as a matched set.

Ring gear/pinion, adjustment

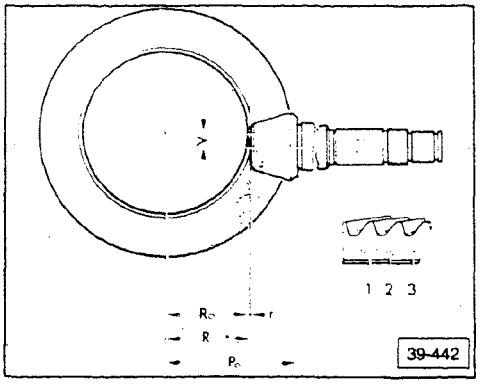

Service gears

1 — **0937** = Oerlikon gear set, 9:37 ratio
2 — **312** = Serial number of matched gear set
3 — **25** = Dimension **r** is the ring and pinion deviation measured against the master gauge used in production. Dimension **r** is always given in 0.01 mm. For example: 25 means **r** = 0.25 mm

Ro — Length of master gauge used in factory testing machine. **Ro** = 53.15 mm

R — Actual dimension between ring gear centerline and end face of pinion at quietest running point for this gear set

Vo — Hypoid offset = 35 mm

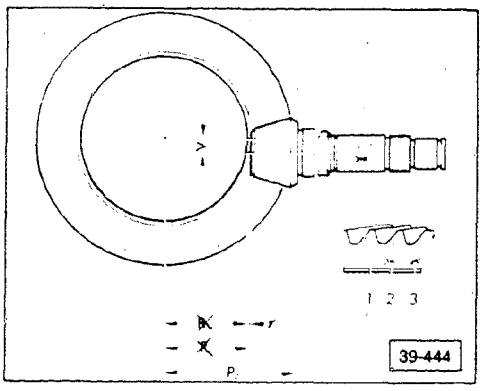

Production gears

X — Markings x'ed out are not shown on production gears

Po — Setting dimension for production gears

CAUTION

In production position of pinion is determined by dimension **Po** (ring gear centerline to back of pinion head).

Marking of deviation **r** on ring gear and matching number have been discontinued. It is therefore necessary to measure position of pinion **before** removing it when parts which affect position of pinion are to be replaced. See adjustment overview, page 39.48.

cardiagn.com

Ring gear/pinion, adjusting

Adjustment overview

to be adjusted / Part replaced	Ring gear (S1 & S2) page 39.53	Pinion (S3) Via dim. "r" page 39.47	Pinion (S3) Via actual measurement page 39.48	Flange shaft page 39.35
Housing for final drive	X		X	
Differential gear housing	X			X
Taper roller bearing for pinion			X	
Taper roller bearing for differential	X			
Ring for pinion set	X	X		
Cover for final drive	X			X
Flange shaft				X
Differential pinion gear				

Pinion, determining position

(actual dimension)

This operation is only necessary if the deviation **r** is not marked on the ring gear and if any parts which directly affect the pinion position are to be replaced. These parts are:

- pinion bearings
- final drive housing

- remove differential from final drive housing
- insert universal measuring bar in final drive housing as described on page 39.51
- measure the deviation from **Ro** (maximum deflection)
- note reading, this is dimension **r**
  - after replacement of parts this dimension is used to determine the thickness of shim **S3**

cardiagn.com

Ring gear/pinion, replacement

If a new ring and pinion gear set is to be installed, the following work sequence should be followed.

1 — Determine the total shim thickness **S total (S1 plus S2)** for differential turning torque.

2 — Determine shim **S3** for new pinion.

3 — Distribute **S total** between **S1** and **S2** to obtain the specified backlash for the ring and pinion gear set.

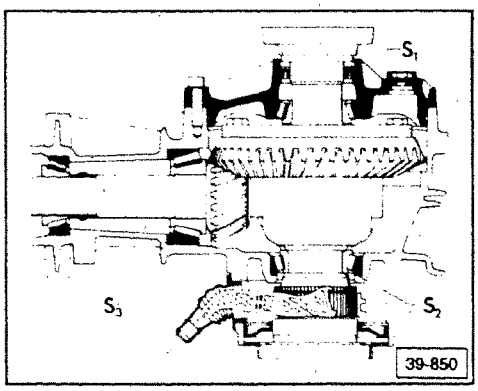

Note

All cautions and procedures must be followed carefully to insure quiet, reliable operation of the final drive assembly.

Position of shims

- **S1** = shim behind ring gear
- **S2** = shim opposite ring gear
- **S3** = shim behind the pinion bearing outer race

cardiagn.com

Pinion, adjusting

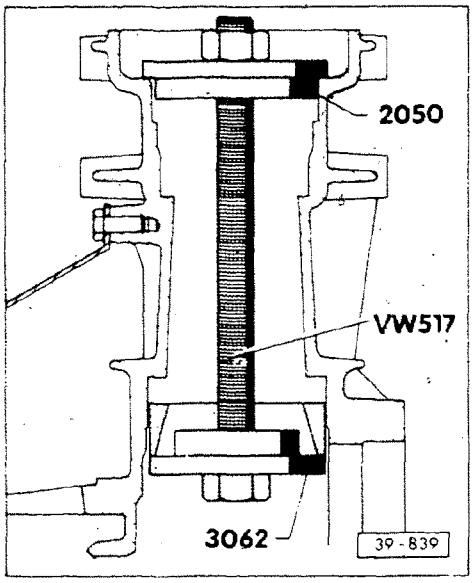

Ring gear/pinion need adjusting if gear set has been replaced. If other parts which affect position of the pinion are to be replaced, setting must be measured **before** disassembly, and pinion set to this dimension when assembling (see adjustment overview, page 39.48).

- mount final drive to holding fixture
- pull in large pinion bearing outer race **without** shim **S3**

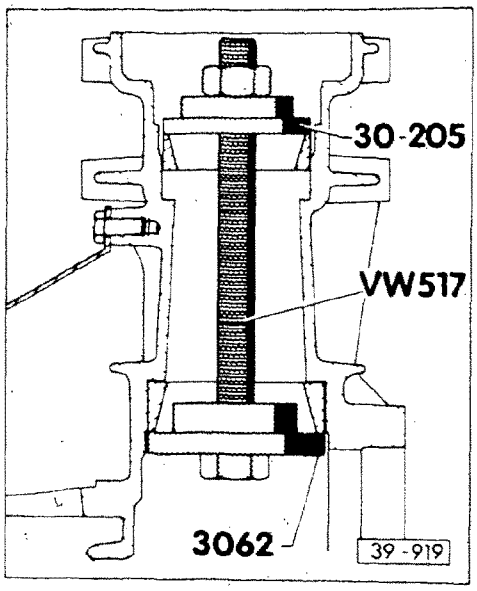

- pull in small pinion bearing outer race

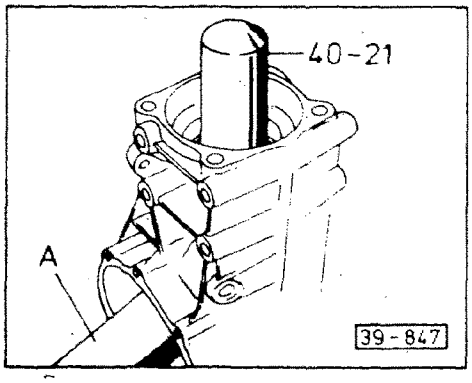

- insert pinion
- heat pinion bearing inner race to 120°C (248°F) and install bearing on pinion **without** spacer
  - **A** = wood support

cardiagn.com

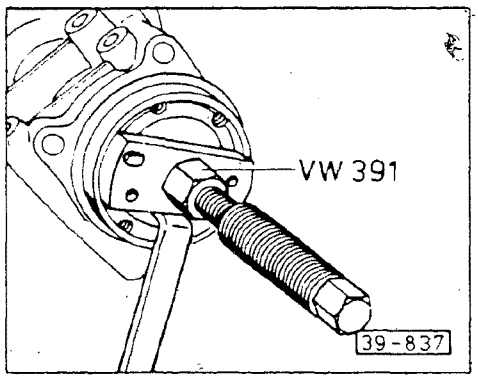

- install flange onto pinion

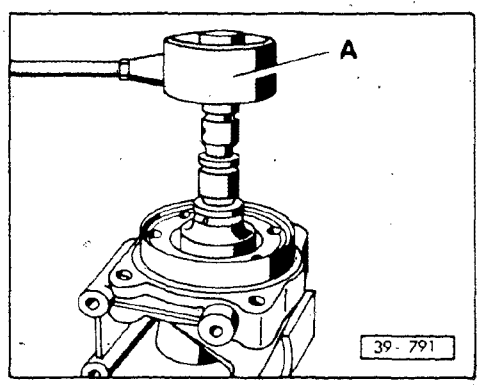

- tighten flange nut until pinion turning torque reaches 280-320 Ncm (25-28 in. lb or 29-33 cm kg)
  - **A** = wrench gauge 0-600 Ncm (0-60 in. lb or 0-65 cm kg)

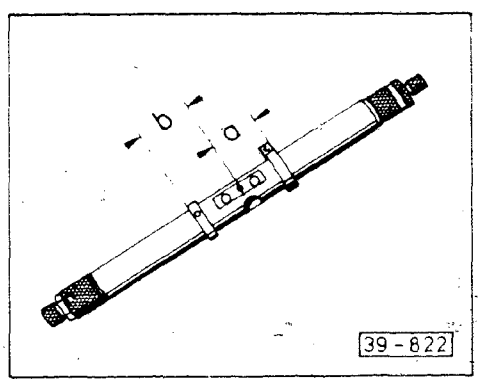

- slide centering ring on measuring bar **VW 385/1** and set **a** to 60 mm
- slide opposite ring on bar to set **b** to 50 mm

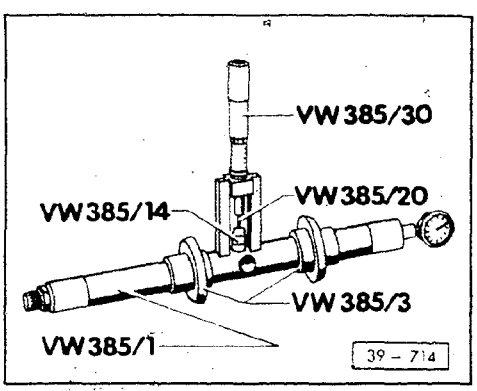

- prepare measuring bar as shown (use dial indicator with 3 mm range)
  - indicator extension **VW 385/20** = 3 mm long
- set universal master gauge **VW 385/30** to **Ro** = 53.15 mm
- zero dial indicator with a 3 mm preload

cardiagn.com

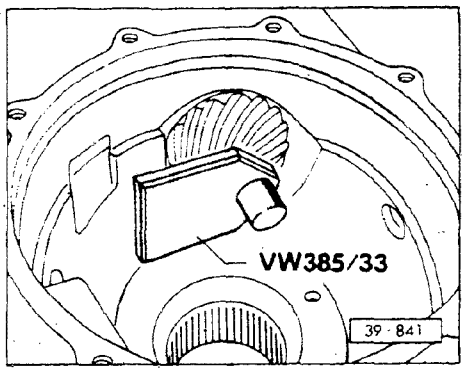

- position end plate **VW 385/33** to pinion
- install measuring bar in housing
- install cover for final drive housing and tighten 4 bolts
- pull 2nd centering ring outward until measuring bar can just be turned by hand

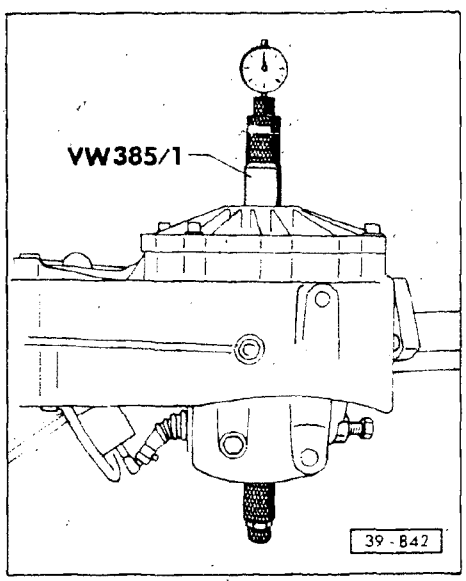

- turn measuring bar slightly until dial indicator indicates maximum reading **e**
  - example: **e** = 1.60 mm

CAUTION

When measuring bar has been removed check to be sure that it zeros with 3 mm preload when master gauge **VW 385/30** is mounted.

Shim S3, determining thickness

S3 = e − r

e = dial indicator reading (maximum deflection)
r = deviation (marked on ring gear in 1/100 mm)

Example

e dial indicator reading	1.60 mm
r deviation	− 0.42 mm
S3	= **1.18 mm**

cardiagn.com

Thickness (mm)	Part Number
0.95	183 525 231
1.00	183 525 231 A
1.05	183 525 231 B
1.10	183 525 231 C
1.15	183 525 231 D
1.20	183 525 231 E
1.25	183 525 231 F
1.30	183 525 231 G
1.35	183 525 231 H
1.40	183 525 231 J
1.45	183 525 231 K
1.50	183 525 231 L
1.55	183 525 231 M

S3 shims available

Due to varying tolerances, check all shims with a micrometer for correct thickness. Exact shim thickness can be attained by using shims that are thicker or thinner than specifications.

- remove measuring bar
- remove pinion and install it with the determined shim, spacer and seal
- install flange and flange nut
- tighten flange nut until specified turning torque is reached

CAUTION

Tighten pinion nut a little at a time and read turning torque frequently. If turning torque exceeds specifications the spacer will have to be replaced. Once the spacer has been compressed it cannot be used again.

- check that turning torque is:
  - new bearings = 280-320 Ncm (25-28 in. lb or 29-33 cm kg)
  - used bearings* = 30-60 Ncm (3-5 in. lb or 3-6 cm kg)

*with at least 50 km (30 miles) running time

Checking measurement

- turn pinion several times in both directions
- insert measuring bar and check measurement
  - Shim **S3** is correct if dial indicator shows ring gear deviation **r** within tolerance of ± 0.04 mm

Ring gear, adjusting

Note

The ring gear must be adjusted if any of the following parts are replaced:

- final drive housing
- final drive cover
- differential bearings
- differential gear housing
- ring and pinion set

See adjustment overview page 39.48.

cardiagn.com

S total, determining (pinion removed)

- remove differential bearing outer races from final drive housing and cover (see pages 39.45 and 39.46)
- remove shims **S1** and **S2**

- install bearing outer races **without** shims (see page 39.46)
- insert differential gear into housing (ring gear toward cover)

- install cover and tighten bolts evenly to 25 Nm (18 ft lb)
- position final drive housing in holding fixture with the cover up
- attach dial indicator as shown with 1 mm preload, zero gauge
  - **A** = 30 mm extension
  - **B** = bolt M8 x 45

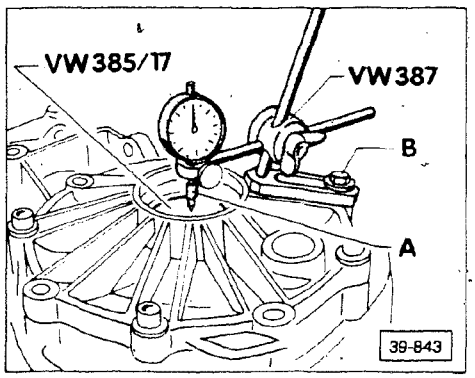

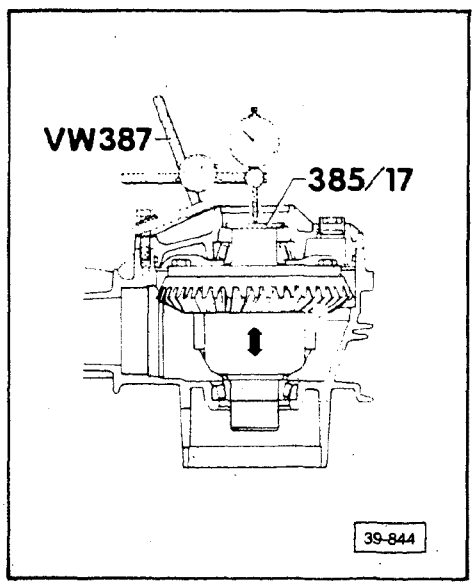

- note reading on gauge while moving differential gear up and down
  - example: 1.60 mm

CAUTION
Do not turn differential while taking reading or a false reading will result.

S total (S1 + S2), determining

S total = preload + indicator reading

Example

preload (constant value)	0.40 mm
dial indicator reading	+ 1.60 mm
S total	**= 2.00 mm**

cardiagn.com

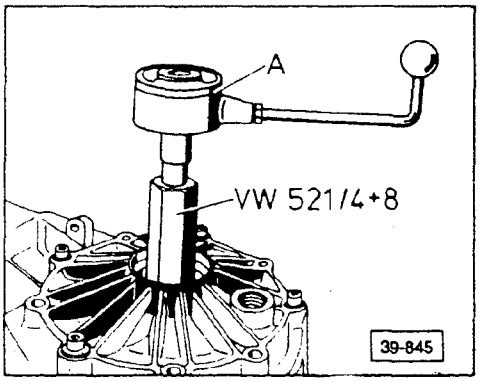

Turning torque, measuring

- lubricate bearings with hypoid oil before installing
- check that turning torque is:
  - new bearings = 250-350 Ncm (22-31 in. lb or 26-36 cm kg)
  - used bearings* = 30-60 Ncm (3-5 in. lb or 3-6 cm kg)
  - **A** = torque wrench 0-600 Ncm (0-60 in. lb or 0-65 cm kg)

Note

When ring gear and pinion are to be readjusted; start now with pinion adjustment (page 39-50).

Backlash, adjusting

- install pinion with shim **S3** installed
- install **S total** (**S1** + **S2**) on housing side of differential
- turn differential several times in both directions to seat bearings

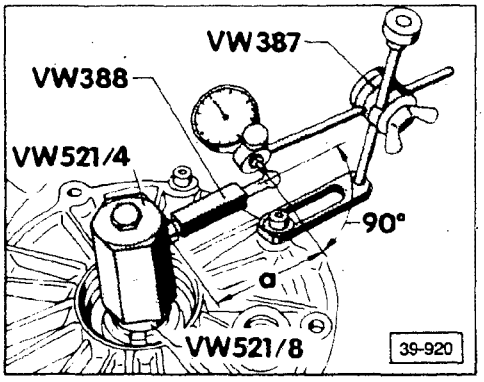

- install dial indicator as shown
- use dial indicator extension **VW 382/10**
  - **a** = 79 mm
- while holding pinion from moving, turn ring gear to stop and zero dial indicator
- turn ring gear back and note backlash
- loosen lock bolt on locking sleeve
- rotate ring gear 90° tighten lock bolt and again measure backlash
- repeat above procedures at least two more times
- add all four readings together and divide by four to find average backlash

Example

1st reading	0.68 mm
2nd reading	+ 0.70 mm
3rd reading	+ 0.70 mm
4th reading	+ 0.68 mm
Total	= 2.76 mm
divided by 4	÷ 4
Average backlash	**= 0.69 mm**

Note

If measurements differ more than 0.06 mm from each other, ring gear/pinion installation is incorrect. Check ring gear and pinion; if necessary, replace.

cardiagn.com

Average backlash (mm)	Shim thickness S1 (mm)
0.62	0.67
0.63	0.69
0.64	0.70
0.65	0.72
0.66	0.73
0.67	0.75
0.68	0.76
0.69	0.78
0.70	0.80
0.71	0.81
0.72	0.83
0.73	0.84
0.74	0.86
0.75	0.87
0.76	0.89
0.77	0.91
0.78	0.92
0.79	0.94
0.80	0.96
0.81	0.97
0.82	0.99
0.83	1.00
0.84	1.01
0.85	1.03
0.86	1.04
0.87	1.06
0.88	1.07
0.89	1.09
0.90	1.10
0.91	1.12
0.92	1.13
0.93	1.15
0.94	1.16
0.95	1.18
0.96	1.19
0.97	1.21
0.98	1.23
0.99	1.24
1.00	1.25
1.01	1.27
1.02	1.28
1.03	1.30
1.04	1.32
1.05	1.33
1.06	1.35
1.07	1.36
1.08	1.38
1.09	1.39
1.10	1.41
1.11	1.42
1.12	1.43
1.13	1.45
1.14	1.46
1.15	1.48

Shim S1, determining thickness
(behind ring gear)

- select shim **S1** from chart

cardiagn.com

Thickness (mm)	Part Number
0.15	005 409 385
0.20	005 409 385 A
0.25	005 409 385 B
0.50	005 409 385 C
0.80	005 409 385 D
1.00	005 409 385 E
1.50	055 409 385 F

Thickness (mm)	Part Number
0.15	005 409 381
0.20	005 409 381 A
0.25	005 409 381 B
0.55	005 409 381 C
0.60	005 409 381 D
0.65	005 409 381 E
0.80	005 409 381 F
1.35	005 409 381 G
1.50	005 409 381 H
1.65	005 409 381 J

Example

average backlash = 0.69 mm
S1 from table = 0.78 mm

- **S1** shims available

Shim S2, determining thickness

S2 = S total – S1

Example

S total	2.00 mm
S1	– 0.78 mm
S2	**= 1.22 mm**

- **S2** shims available

- install shim **S1** behind ring gear
- install shim **S2** opposite ring gear
- measure backlash at four locations around ring gear
- check that backlash is 0.12-0.22 mm
  - backlash must not deviate more than 0.05 mm between readings

cardiagn.com

Index

Torque converter assembly
- checking 32.2
- ★ draining 32.5
- identifying 32.2

Torque converter bushing
- checking 32.2
- removing/installing 32.2

Torque converter oil seal
- installing 32.4
- removing 32.3

★ NEW INFORMATION since last filming

cardiagn.com

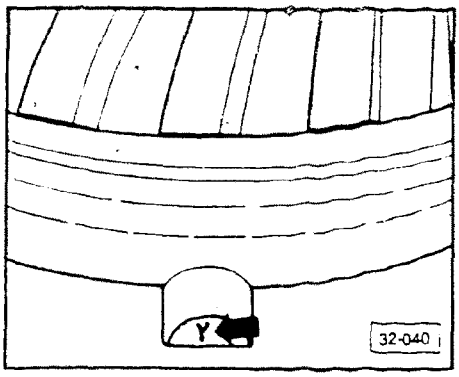

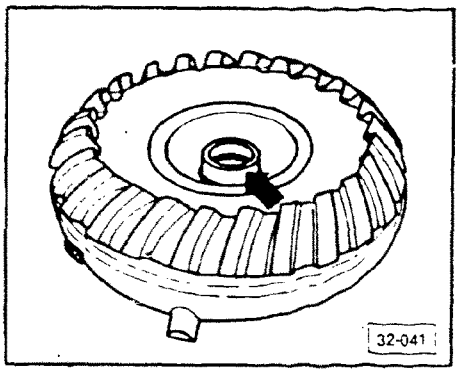

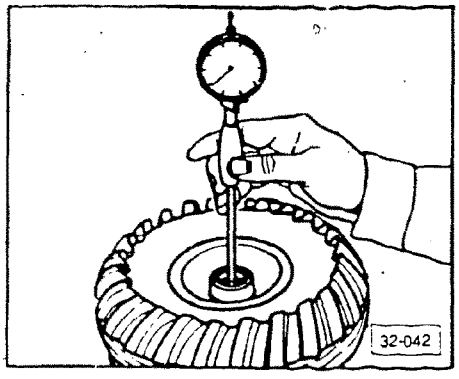

Torque converter, disassembling/ assembling

Torque converter, identifying

- identify torque converter by a code letter (**arrow**)
  - see Technical data, Repair Group 37 for vehicle application

Torque converter, checking

- check torque converter hub for scoring (**arrow**)
- check cooling vanes for secure fit
- insert turbine shaft and check for free movement of turbine
- check bushing for wear

Note

Replace torque converter if damaged. Only the torque converter bushing can be renewed.

Bushing for torque converter, checking

- maximum wear limit diameter = 34.25 mm (1.348 in.)
- maximum out-of-round = 0.03 mm (0.001 in.)

cardiagn.com

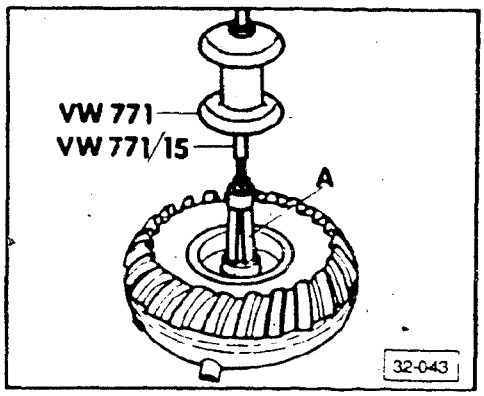

Bushing for torque converter, removing

- **A** — commercial puller e.g. **US 1108** or **Kukko 21/5** (30-37 mm)

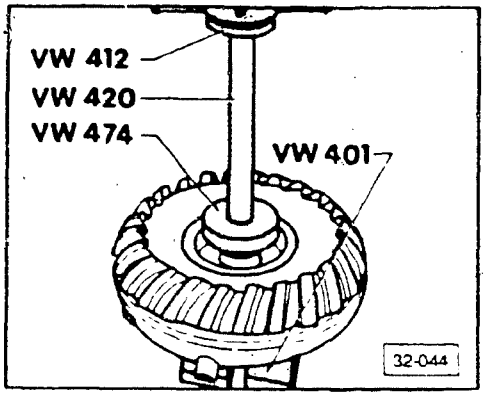

Bushing for torque converter, installing

- press bushing in until seated

> **CAUTION**
>
> The installed bushing must have an inside diameter of 34.03-34.05 mm (1.340-1.341 in.).
>
> If bushing is less than minimum inside diameter, it may seize. Do not ream out.
>
> After installing bushing, check edge of converter hub for burrs or sharp edges (which may damage seal).

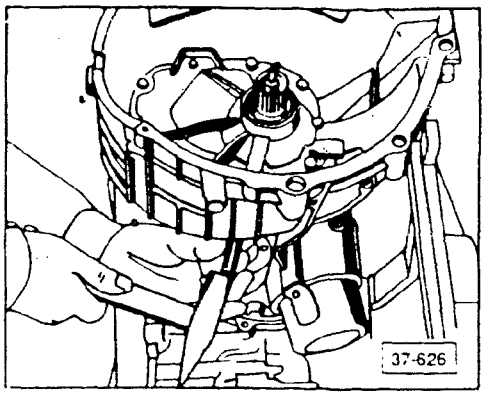

Oil seal for torque converter, removing

cardiagn.com

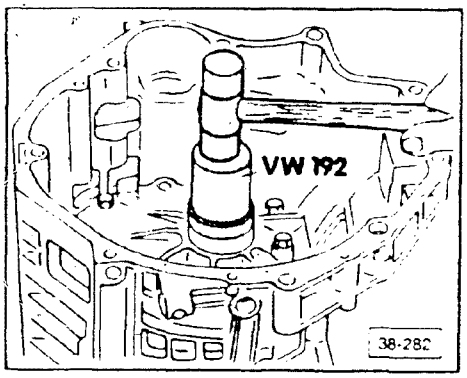

Oil seal for torque converter, installing

- coat seal with ATF and drive in, until seated

CAUTION

Be careful, seal is soft and is easily damaged. Silicone seals must not contact gasoline or any similar solvents.

cardiagn.com

Torque converter, draining

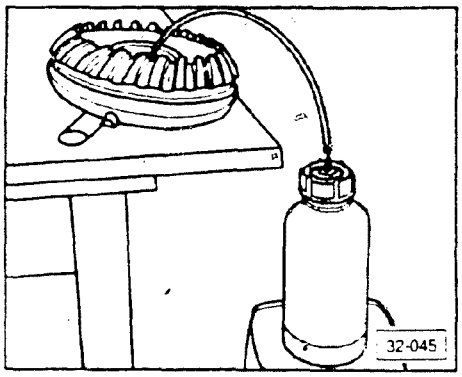

Note

If ATF is contaminated, drain the torque converter.

Use fluid evacuator **EX1**, if available, and follow the manufacturer's instructions. Otherwise, drain using the manual method:

- place converter in slanted position
- attach small inside diameter hose (with maximum outside diameter of 8 mm) to plastic bottle of about 2 liter capacity
- cut converter end of hose on an angle
- squeeze bottle and hold while inserting free end of hose into converter hub
  - make sure end of hose rests on bottom
- release bottle to allow ATF to flow
- loosen bottle cap when ATF begins to flow

cardiagn.com

Index

Automatic Trans. 089

Main pressure
- checking 37.19

Selector lever/cable
- adjusting 37.4
- assembly 37.3
- installing 37.4
- switch, installing 37.8

Shiftlock II
- checking function 37.9
- troubleshooting 37.10

Shift points
- checking 37.18

Solenoid switch
- adjusting 37.8

Stall speed
- checking 37.20

Technical data
- chart 37.2

Throttle control
- adjusting 37.14
- assembly 37.13

Transmission
- removing/installing 37.16

Automatic Trans. 087

Lubricant capacities
- chart 37.22

Main pressure
- checking 37.32

Selector lever/cable
- assembly 37.23
- housing, adjusting 37.25
- switch, installing 37.25

Shift points
- checking 37.31

Solenoid switch
- adjusting 37.25

Stall speed
- checking 37.33

Technical data
- chart 37.21

Throttle control
- adjusting 37.27
- assembly 37.26

Transmission
- assembly 37.26
- removing/installing 37.29

carcdiagn.com

Technical Data

Note

For locations of transmission identification codes, see Repair Group 00.

Transmission code letters	KAU	
date of manufacture from to	07.87	
Automatic transmission	089	
Torque converter code letter	Y	
Valve body code letters	FVB	
date of manufacture from to	07.87	
Forward clutch number of splined plates	inner 4	outer 3
Direct/reverse clutch* number of springs	24	
number of splined plates	inner 4	outer 4
1st/reverse gear clutch number of splined plates	inner 4	outer 4
2nd gear brake band first tighten, then loosen	2-1/2 turns	
Application to engine	2.0 liter CIS-motronic 108 BHP SAE net	
Final drive ratio	39:12 = 3.250	
Gear ratios 1st gear 2nd gear 3rd gear Reverse	2.71 1.50 1.00 2.43	
ATF cooler	supply flow 5-row	

*Direct/reverse clutch is 140 mm diameter

cardiagn.com

THIS FRAME INTENTIONALLY LEFT

BLANK

cardiagn.com

Selector lever/cable, servicing

WARNING

Before working on engine that is running, always place selector lever in **P** and apply parking brake.

CAUTION

Disconnect battery ground strap **before** starting to work on any part of electrical system.

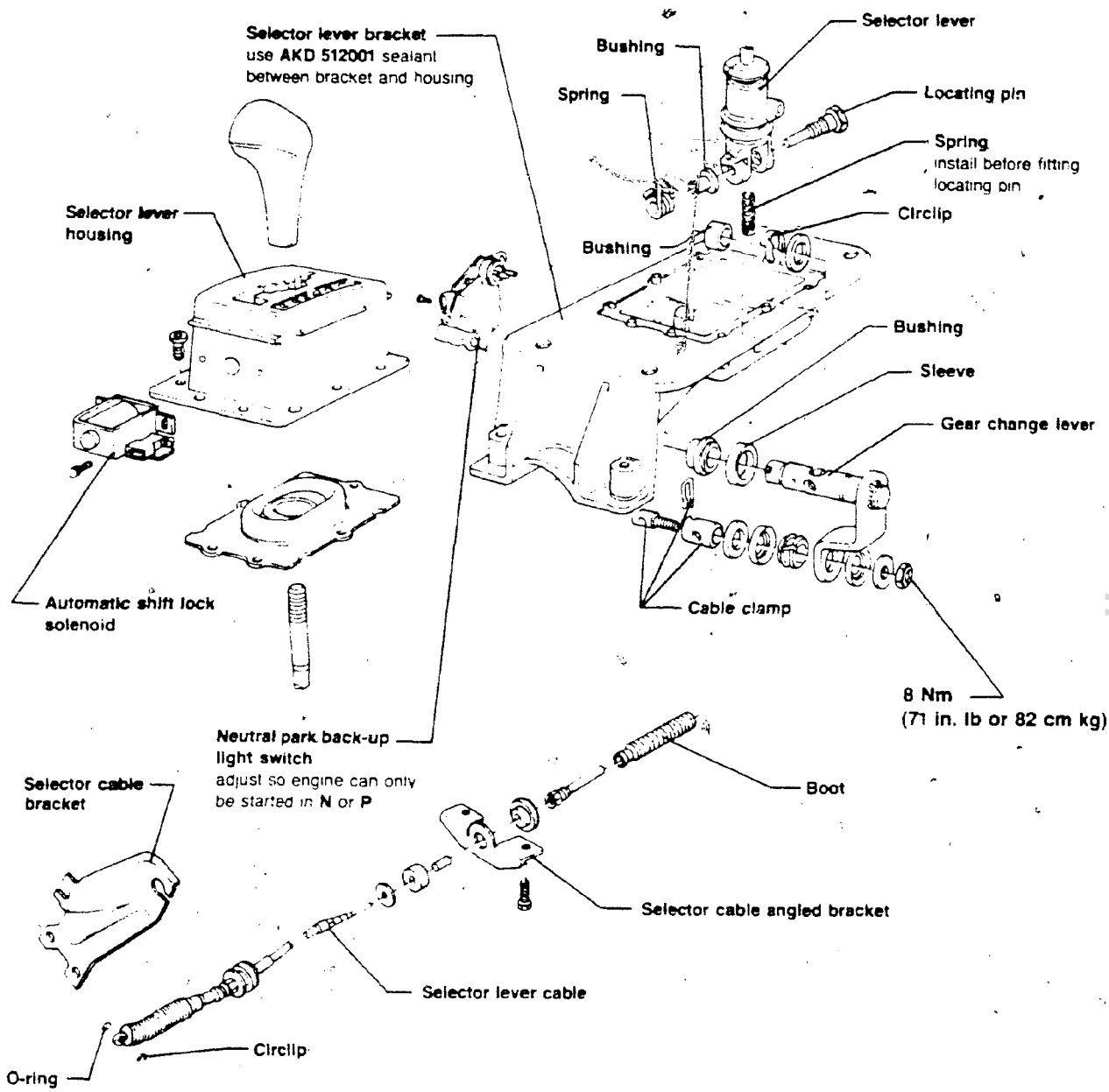

CAUTION

Foot brake must be applied before selector lever can be moved out of **P**

37-695

cardiagn.com

Selector lever cable, installing

> **CAUTION**
>
> Do **NOT** bend or kink.
> Lubricate ends before installing.

- tighten cable at selector cabie bracket to 15 Nm (12 ft lb)
- fit cable into cable clamp **before** installing angled bracket

Selector lever cable, adjusting

- place selector lever in **P**
- loosen cable clamp nut
- move gear change lever to **P** (toward rear to stop)
- tighten cable clamp nut to 8 Nm (71 in. lb or 82 cm kg)

cardiagn.com

THIS PAGE
INTENTIONALLY
LEFT
BLANK

cardiagn.com

THIS FRAME INTENTIONALLY LEFT

BLANK

cardiagn.com

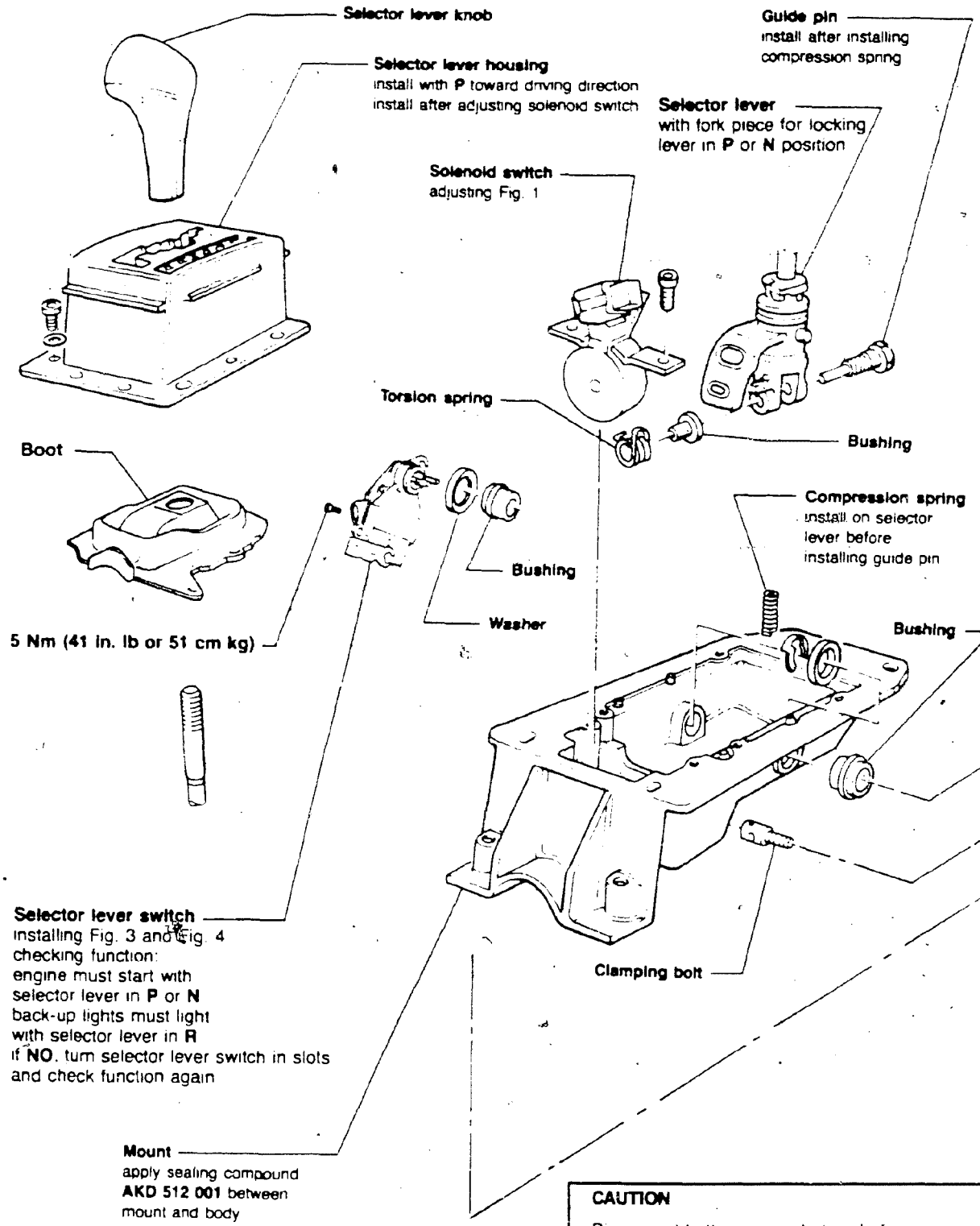

cardiagn.com

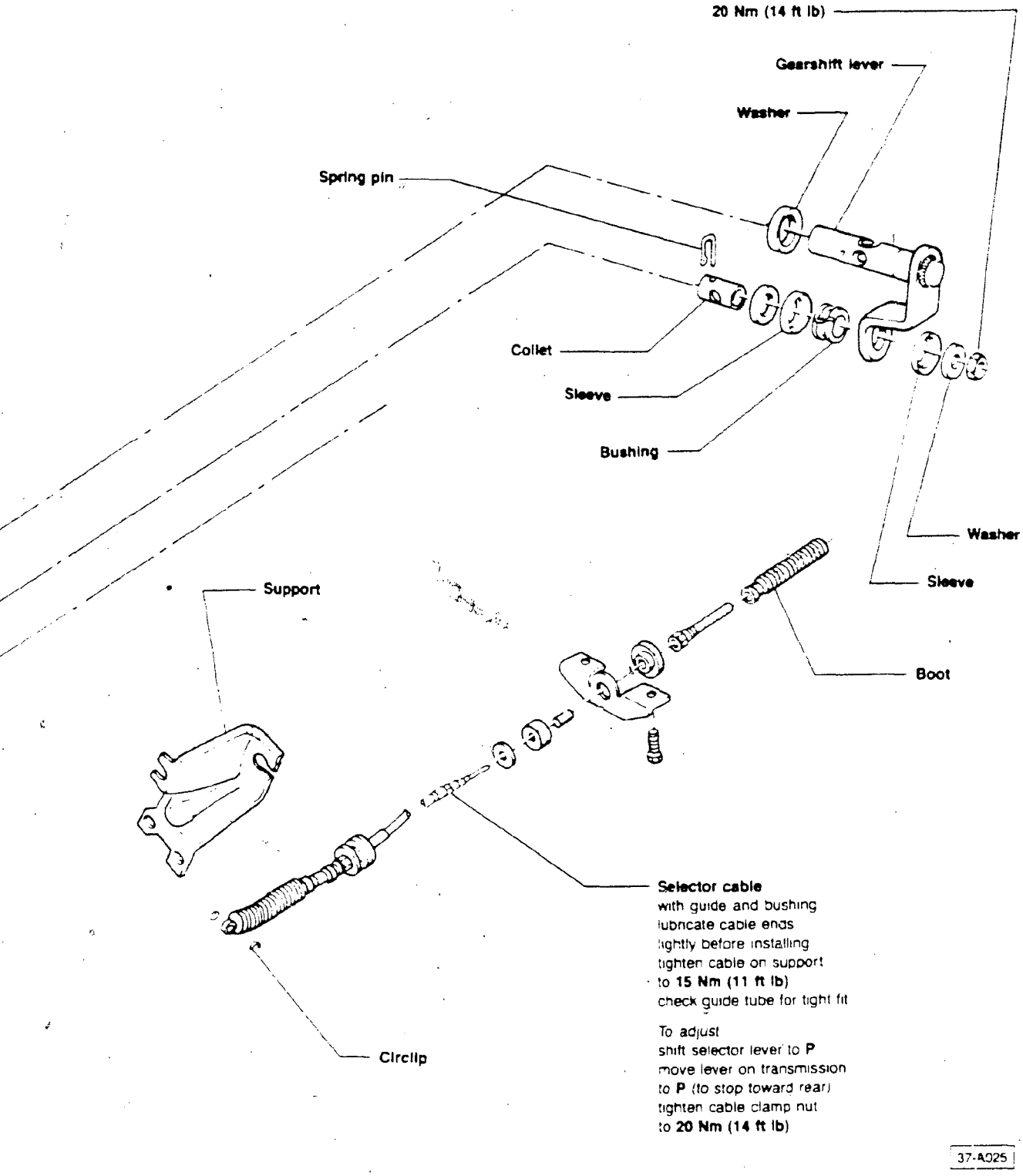

cardiagn.com

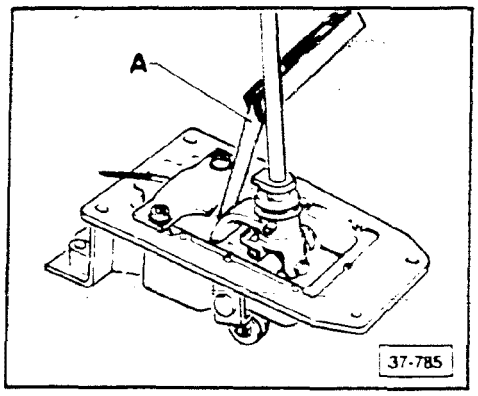

▶ **Fig. 1 Solenoid switch, adjusting**

- place gage **A**, 0.8 mm thick, between selector lever and solenoid switch
- push solenoid switch against gauge and tighten

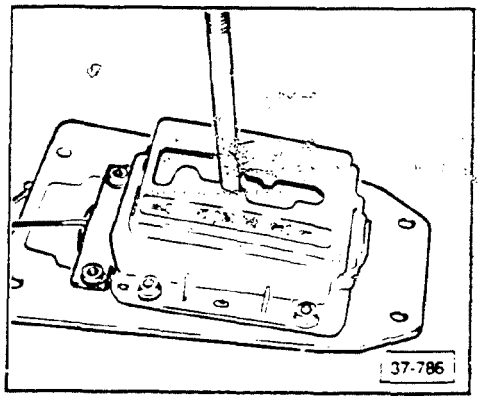

▶ **Fig. 2 Gearshift lever bracket to shift lever, adjusting**

- after installing solenoid switch, center lower bore of fork piece and supply voltage to switch
  - solenoid pin locks fork piece
- install gearshift lever housing so selector lever is in position **N** relative to housing

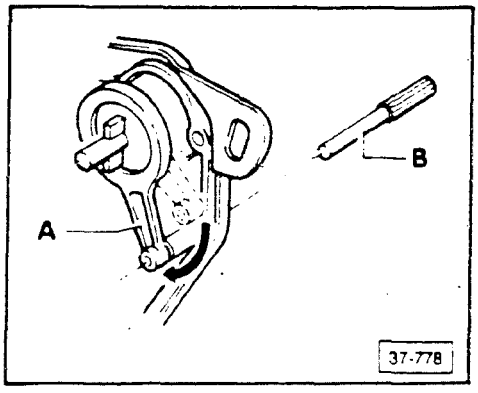

▶ **Fig. 3 Selector lever switch, installing**

- install lever **A** with pin or drill bit, **B** = 4.0 mm diameter, through housing bore

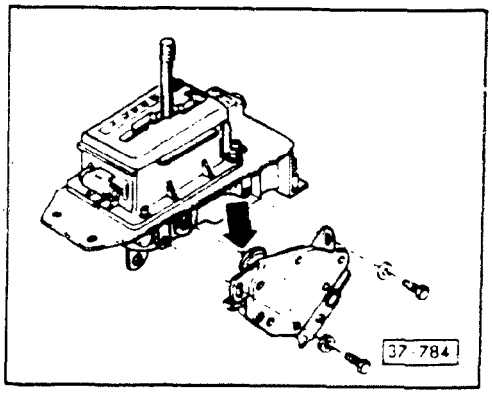

▶ **Fig. 4 Selector lever switch, installing**

- shift selector lever to position **N**
- install selector lever switch so mount (**arrow**) locks into lever shaft
- tighten mounting bolts to 5 Nm (44 in. lb or 51 cm kg)
- remove pin or drill bit

Note

After installing the lever switch, check for correct functioning.

cardiagn.com

Automatic shift lock II, checking function

- shift selector lever to **P** and turn ignition **ON**
  - brake pedal not depressed
    = selector lever locked; cannot be shifted out of **P**
  - brake pedal depressed
    = selector lever can be shifted out of **P** position
- shift selector lever to **N** and turn ignition **ON**
  - brake pedal not depressed
    = selector lever locked; cannot be shifted out of **N**
  - brake pedal depressed
    = selector lever can be shifted out of **N**

Note

At speeds over 5 km/h (3.7 mph) and when shifting to **N**, the selector lever must not lock. The lever must allow shifting to a driving position without depressing the brake pedal.

At speeds under 5 km/h (3.7 mph) and when shifting to **N**, the selector lever must not lock until after one (1) second has elapsed. The selector lever then cannot be shifted until the brake pedal is depressed.

cardiagn.com

Shiftlock II, troubleshooting 1989 model year

Test requirements

- fuse **S12 OK**
- brake lights **OK**
- interior light delay control unit **OK**
- gear selector lever properly adjusted

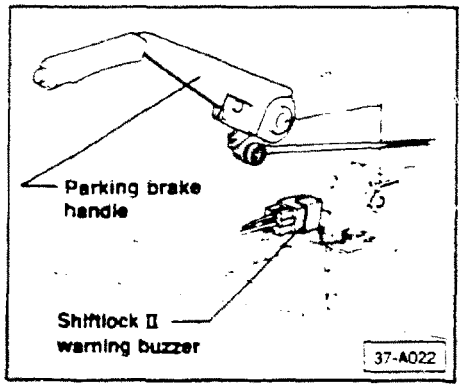

Checking Shiftlock II warning buzzer

- move selector lever to R, N, D, 2 or 1 position
- open driver's door

• warning buzzer does **NOT** sound	• warning buzzer sounds
■ check wiring for open circuits using wiring diagram *or* replace warning buzzer → End	→ Go to Ⓐ next page

cardiagn.com

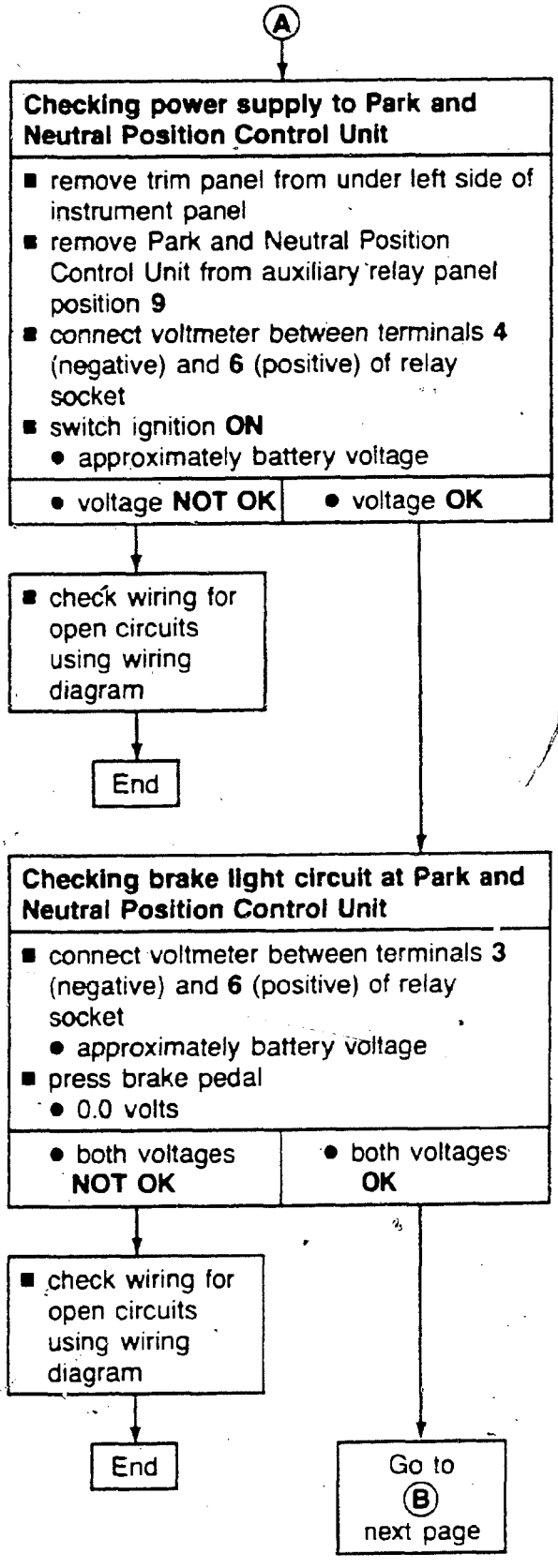

cardiagn.com

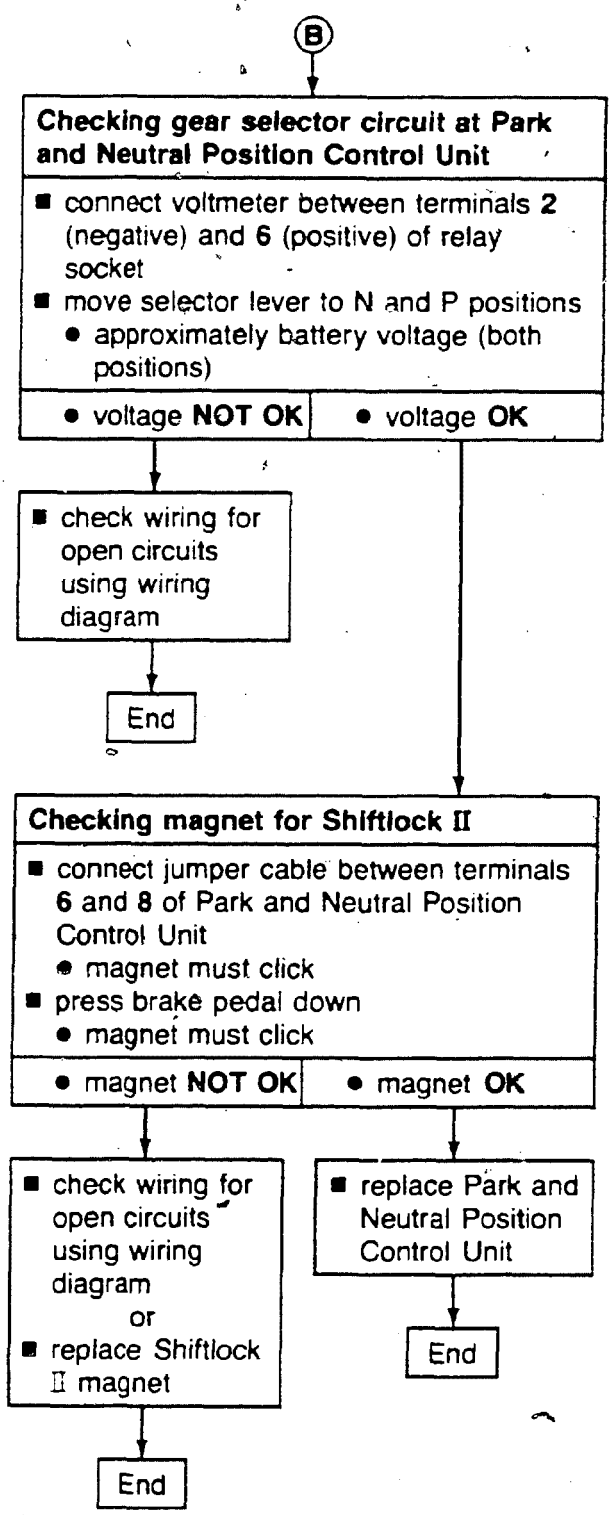

cardiagn.com

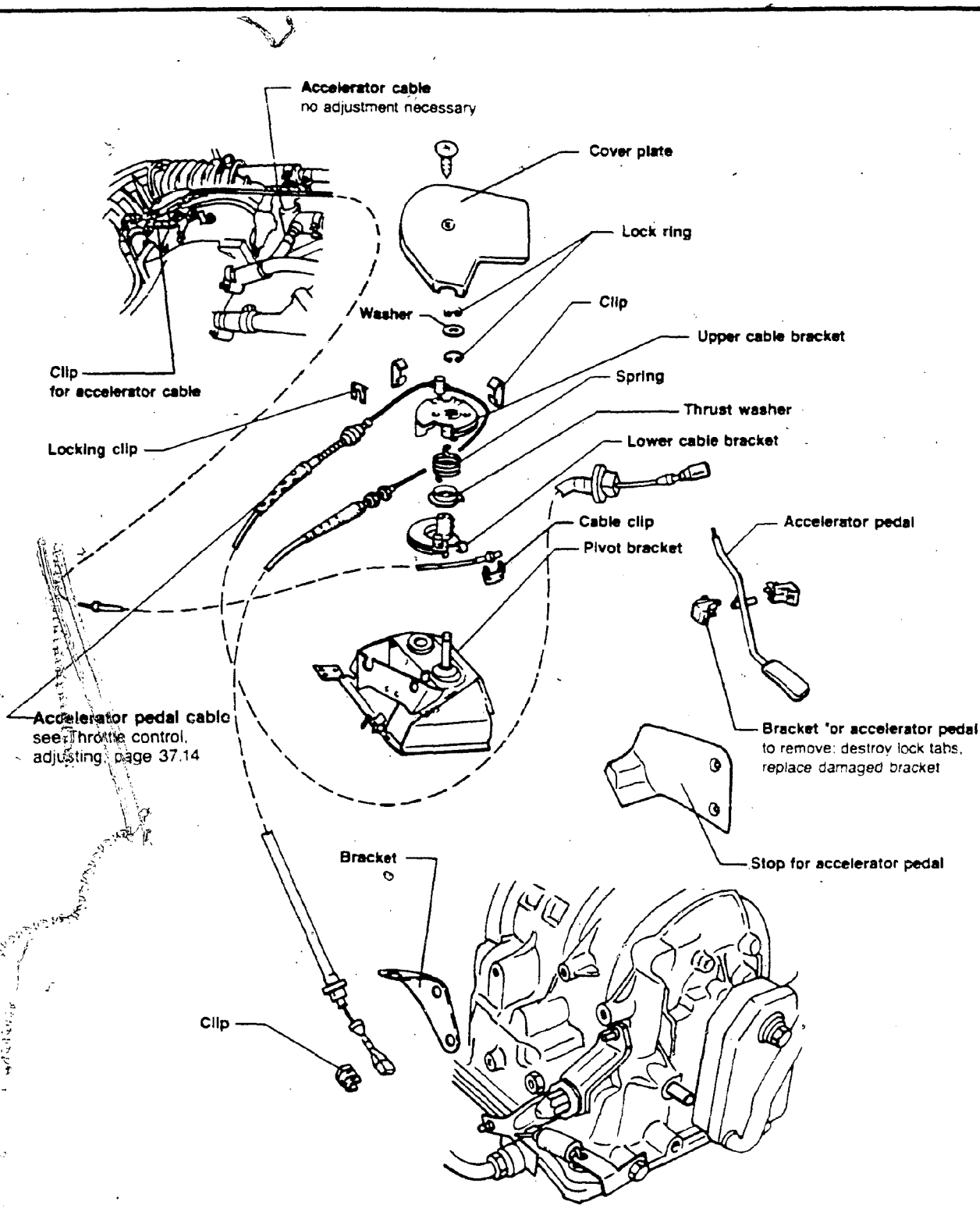

Note

The cable brackets are pre-assembled with the torsion spring and thrust washer prior to installation.

37-709

cardiagn.com

Throttle control, adjusting

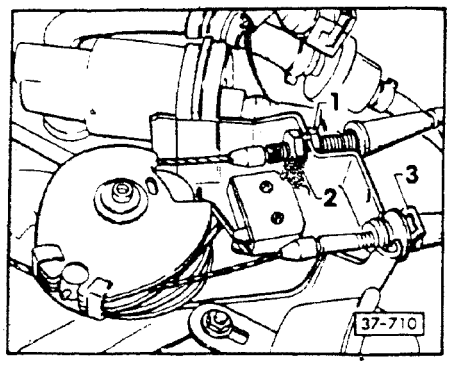

- remove covering for throttle control
- loosen nuts **1** and **2** and remove locking clip **3**
- turn throttle cable brackets to stop (full throttle) position and hold

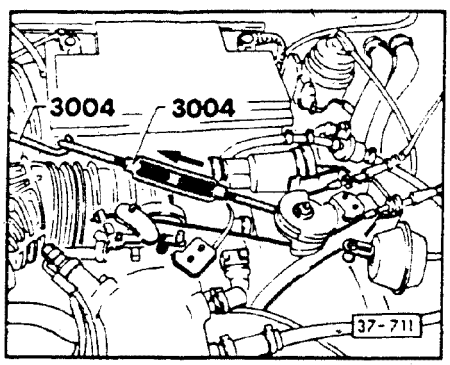

Note

Tool **3004** (two turnbuckles) can be used to hold the throttle cable brackets at full throttle.

If tool **3004** is unavailable, use two turnbuckles (locally obtainable) of an appropriate size. Hook one end on the lever of the lower cable bracket and the other on the lower end of the hood gas strut.

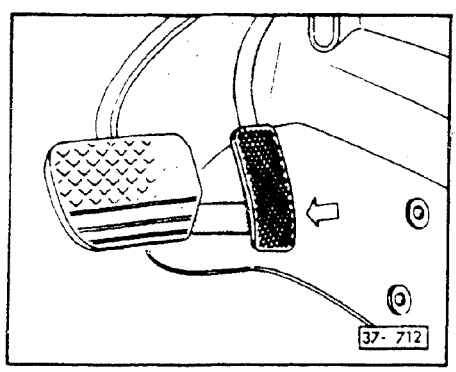

- insert a spacer 17 mm (11/16 in.) thick between accelerator pedal and pedal stop
- push accelerator pedal down to contact spacer and hold (two mechanics required)

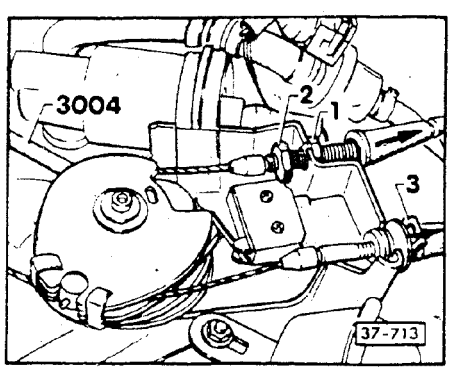

- pull accelerator pedal cable in direction of arrow and install locking clip **3**
- pull cable to transmission in direction of arrow until pressure against spring for transmission kickdown position is felt
- turn nut **1** against bracket and tighten nut **2**
- remove tool **3004** (turnbuckles)

cardiagn.com

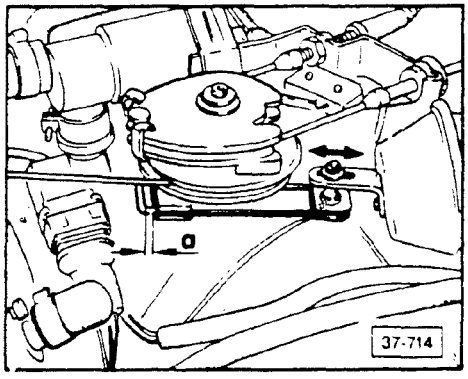

Adjustment, checking

Throttle lever must rest against idle stop when accelerator pedal is released.

- press accelerator pedal to full throttle position (not kickdown)
  - the pressure point for full throttle position of the accelerator pedal must be approximately 15 to 20 mm (5/8 to 13/16 in.) away from the pedal stop
- press accelerator pedal to pedal stop (kickdown)
  - transmission operating lever must contact kickdown stop
  - spring between cable brackets must be stressed

For vehicles with cruise control:

- adjust coupling rod by moving ball end **a** = 1.0 to 1.5 mm (0.039 to 0.059 in.)

For vehicles with A/C

The switch for A/C must not switch on at full throttle but only with the throttle in the kickdown position.

- approximately 2.0 mm (3/16 in.) between switch and cable bracket at full throttle (not kickdown)

cardiagn.com

Automatic transmission, removing

- remove battery
- remove upper engine/transmission bolts
- disconnect transmission ground strap

- disconnect speedometer connector
- install engine support **10-222A**
- raise vehicle

- remove bolts for front engine stop
- remove front exhaust pipe
- remove torque converter cover plate

- remove torque converter bolts (3 bolts)
- disconnect ATF cooler hoses at rear of engine, under battery box
- remove right side splash shield

- disconnect axle shafts at final drive
- disconnect ATF filler pipe
- remove selector cable bracket and disconnect selector cable at transmission

- release plastic clips from seat belt cables
- disconnect accelerator cable from transmission operating lever
- remove cross brace at rear of transmission

- raise transmission with hoist **VAG 1383** and remove transmission mount bolts
- lower hoist **VAG 1383** and raise engine with engine support (transmission will tilt slightly for easier removal)
- remove remaining engine/transmission bolts

- separate left ball joint/wheel bearing housing and pull axle shaft outward
- separate transmission from engine
- lower transmission carefully while holding torque converter to prevent it falling

cardiagn.com

Automatic transmission, installing

Proceed in reverse order of removing and note the following:

- align and tighten transmission mounts last
  - accelerator linkage adjustment, checking, page 37.15
  - selector cable, checking, page 37.4

Tightening torques

Flex plate to crankshaft	45 Nm (33 ft lb)
Axle shaft to drive flange	45 Nm (33 ft lb)
Torque converter bolts	30 Nm (22 ft lb)
Trans to engine bolts	55 Nm (41 ft lb)

cardiagn.com

Shift points, checking

Check the shift points if the transmission shifts into the next gear too early or too late.

Drive the vehicle in all gear ranges under all possible road conditions. Do not road test if there is obvious mechanical damage.

Note

When checking shift points, note that speedometer readings may vary due to permissible manufacturing tolerances.

- note shift points and compare to chart
  - shifts must be smooth and take place quickly without lag in power transmission
- listen for any sign of engine speedup between shifts which indicates slipping brake bands or clutches
- after road testing, check transmission for fluid leaks

Note

If shift points are incorrect or transmission does not kick down, check throttle control pedal cable adjustments.

089 trans. code letters KAU

Shift points in mph (km/h)		
Shift	Full throttle	Kickdown
1-2	22-35 (35-57)	42-50 (67-80)
2-3	55-68 (89-110)	75-82 (121-133)
3-2	34-52 (55-84)	65-71 (104-114)
2-1	14-19 (23-30)	30-38 (48-61)

cardiagn.com

Main pressure, checking

Check main pressure only if defect cannot be found during other checks.

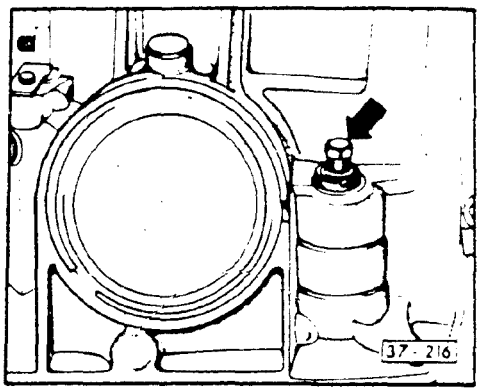

- attach gauge with 0-10 bar (0-145 psi) scale to connection (**arrow**)

Selector lever position	Accelerator pedal position	Main pressure bar (psi)
D	idle speed*	2.90-3.00 (42-44)
Test condition: accelerate to 50 km/h (31 mph), release accelerator pedal (idle speed) and check pressure on gauge		

- measure three different main pressures

Selector lever position	Accelerator pedal position	Main pressure bar (psi)
D	full throttle*	6.30-6.40 (91-93)

*perform these tests on a dynamometer

Selector lever position	Accelerator pedal position	Main pressure bar (psi)
R	idle speed	9.00-10.00 (131-145)
Test condition: vehicle stationary		

- if specified values are not reached, check for the following faults (next page):

CAUTION
QUATTRO TRANSMISSIONS

When checking performance, only use dynamometer designed to brake all four wheels at the same time.

cardiagn.com

Fault	Remedy
oil pump defective	check pump for wear; replace if necessary
throttle control not properly adjusted	adjust throttle control
sticking control valve	disassemble and clean valve body; check valves for free movement

Torque converter code	Stall speed range in RPM
Y	2810-3060

CAUTION

Do not continue stall speed test longer than time required to read tachometer. Maximum stall speed test time is 5 seconds. Wait at least 20 seconds before repeating test.

Stall speed, checking

- Check stall speed only if vehicle exhibits poor performance or poor acceleration. Before measuring stall speed, check that the correct torque converter is installed.

Note

The stall speed is lower with increasing height above sea level (approximately 125 RPM per 3000 feet).

- connect tachometer, VW 1367
- engage parking brake
- start and warm engine
- hold foot brake firmly, put selector lever in **D** and depress accelerator briefly to full throttle
- check that engine runs within stall speed range

cardiagn.com

CONTINUED IN THE

BEGINNING OF NEXT ROW

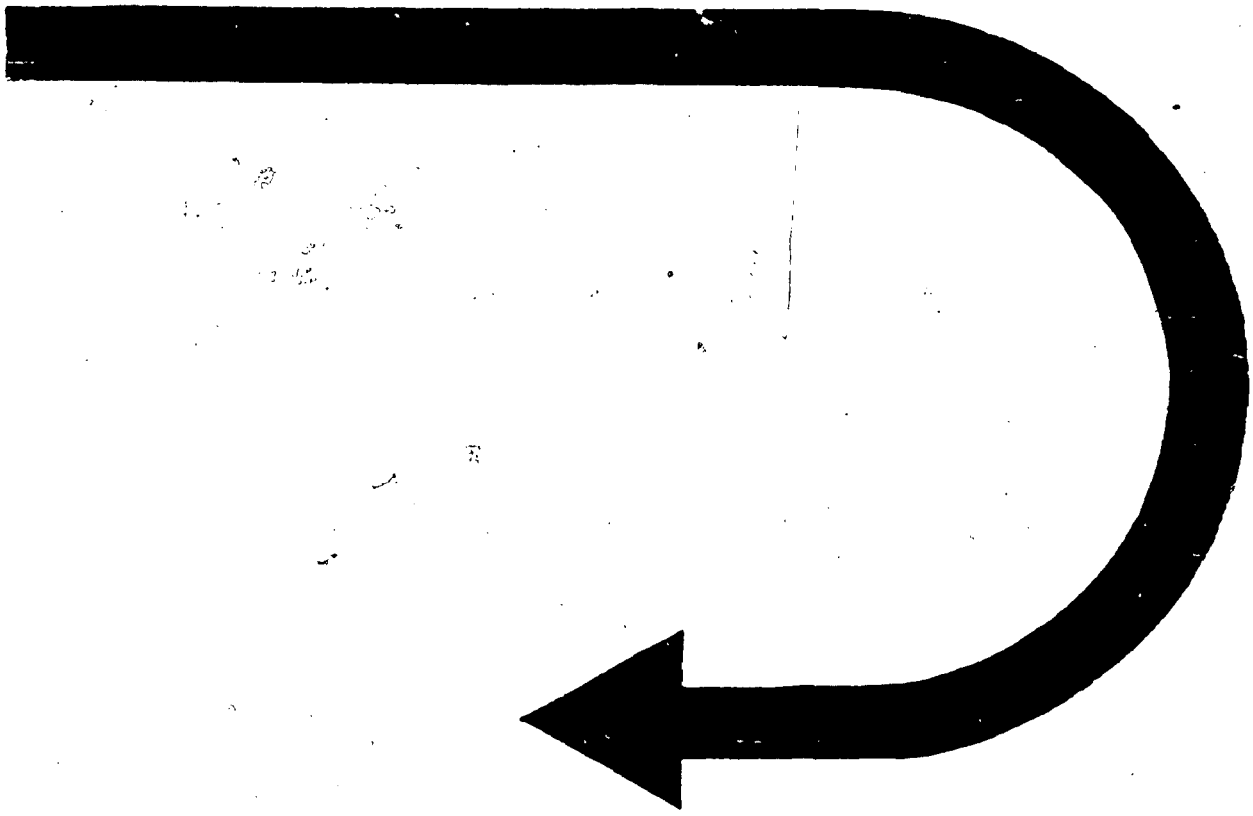

cardiagn.com

Technical data

Note

For locations of transmission identification codes, see Repair Group 00.

Transmission code letters	RBP	
date of manufacture from to	10 88	
Automatic Trans. Type No.	087	
Torque converter code letter **Valve body** code letters	Q FNB	
date of manufacture from to	10 88	
Forward clutch number of splined plates	inner 5	outer 4
Direct/reverse clutch number of springs	24	
number of splined plates	inner 4	outer 4
1st/reverse gear clutch number of splined plates	inner 4	outer 4
2nd gear brake band first tighten, then loosen:	2-1 2 turns	
Application to engine	2.3 Liter 130 BHP SAE net	
Final drive ratio	37:12 = 3.08	
Gear ratios 1st gear 2nd gear 3rd gear Reverse	 2.71 1.50 1.00 2.43	
ATF cooler	supply flow 5-row	

cardiagn.com

Lubricant capacities

Transmission

Capacities	Transmission	Automatic transmission
Dry fill Refill Lubricant	6 Liters (6.35 qt) approximately 3 liters (3.17 qt) ATF-Dexron	087

Final drive

Capacities	Final drive	Automatic transmission
Dry fill Refill Lubricant	1 liter (1.06 qt) filled for service life, no refill hypoid transmission oil GL5 (SAE 90 Mil-L 2105 B)	087

cardiagn.com

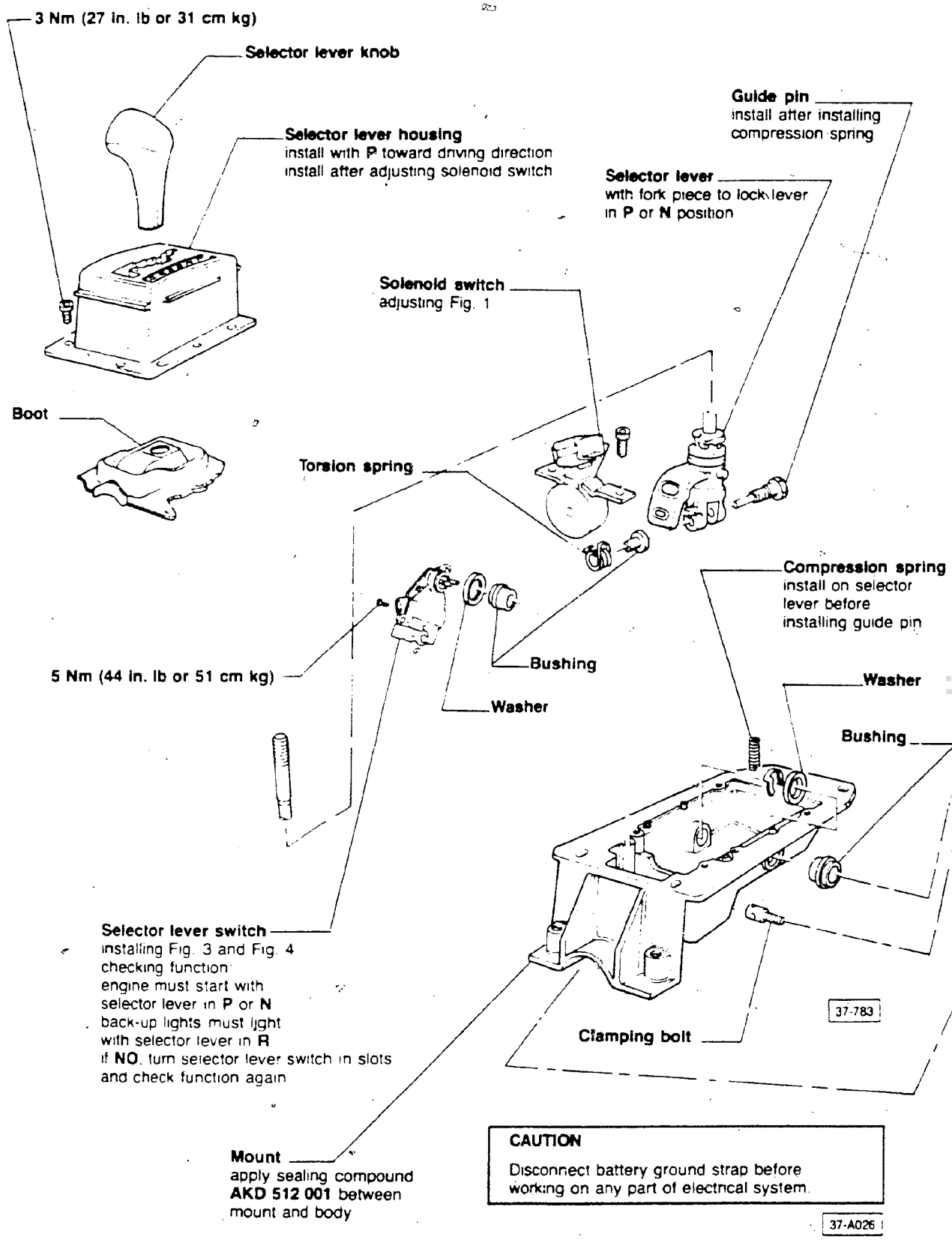

cardiagn.com

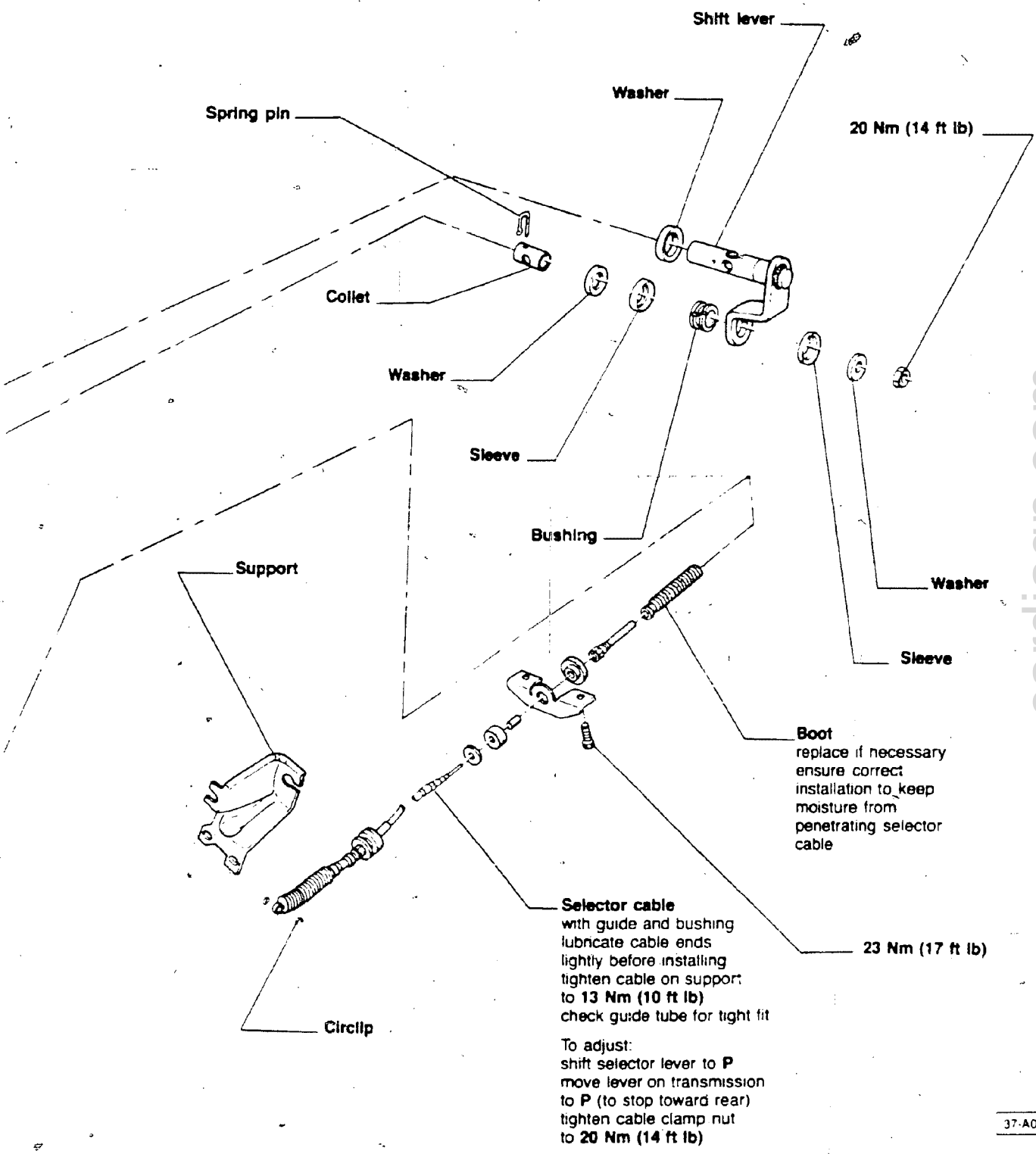

cardiagn.com

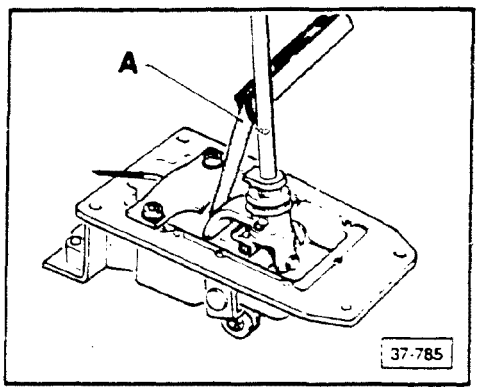

Fig. 1 Solenoid switch, adjusting

- place gauge **A**, 1.0 mm thick, between selector lever and solenoid switch
- with selector lever in **R** position, push solenoid switch against gauge and tighten to 10 Nm (7 ft lb)

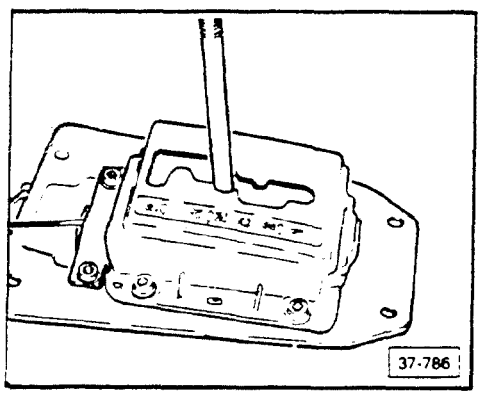

Fig. 2 Selector lever housing to shift lever, adjusting

- after installing solenoid switch, center lower bore of fork piece and supply voltage to switch
  - solenoid pin locks fork piece
- install gearshift lever housing so selector lever is in position **N** relative to housing
  - selector lever must have same amount of travel from **N** to **D** and **N** to **R**

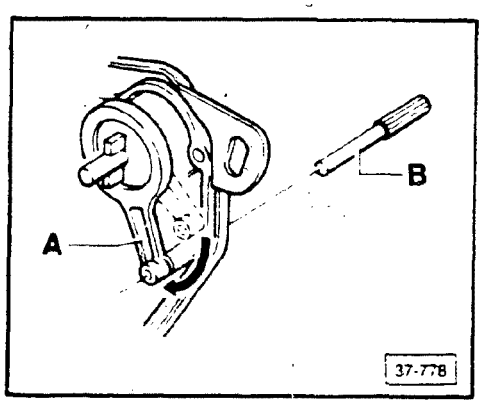

Fig. 3 Selector lever switch, installing

- install lever **A** with pin or drill bit, **B** = 4.0 mm diameter, through housing bore

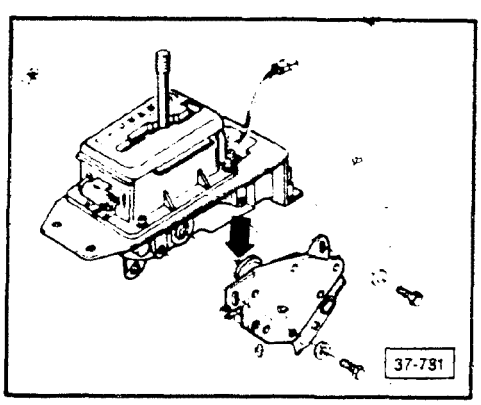

Fig. 4 Selector lever switch, installing

- shift selector lever to position **N**
- install selector lever switch so mount (**arrow**) locks into lever shaft
- tighten mounting bolts to 5 Nm (44 in. lb or 51 cm kg)
- remove pin or drill bit

Note

After installing the lever switch, check for correct functioning.

cardiagn.com

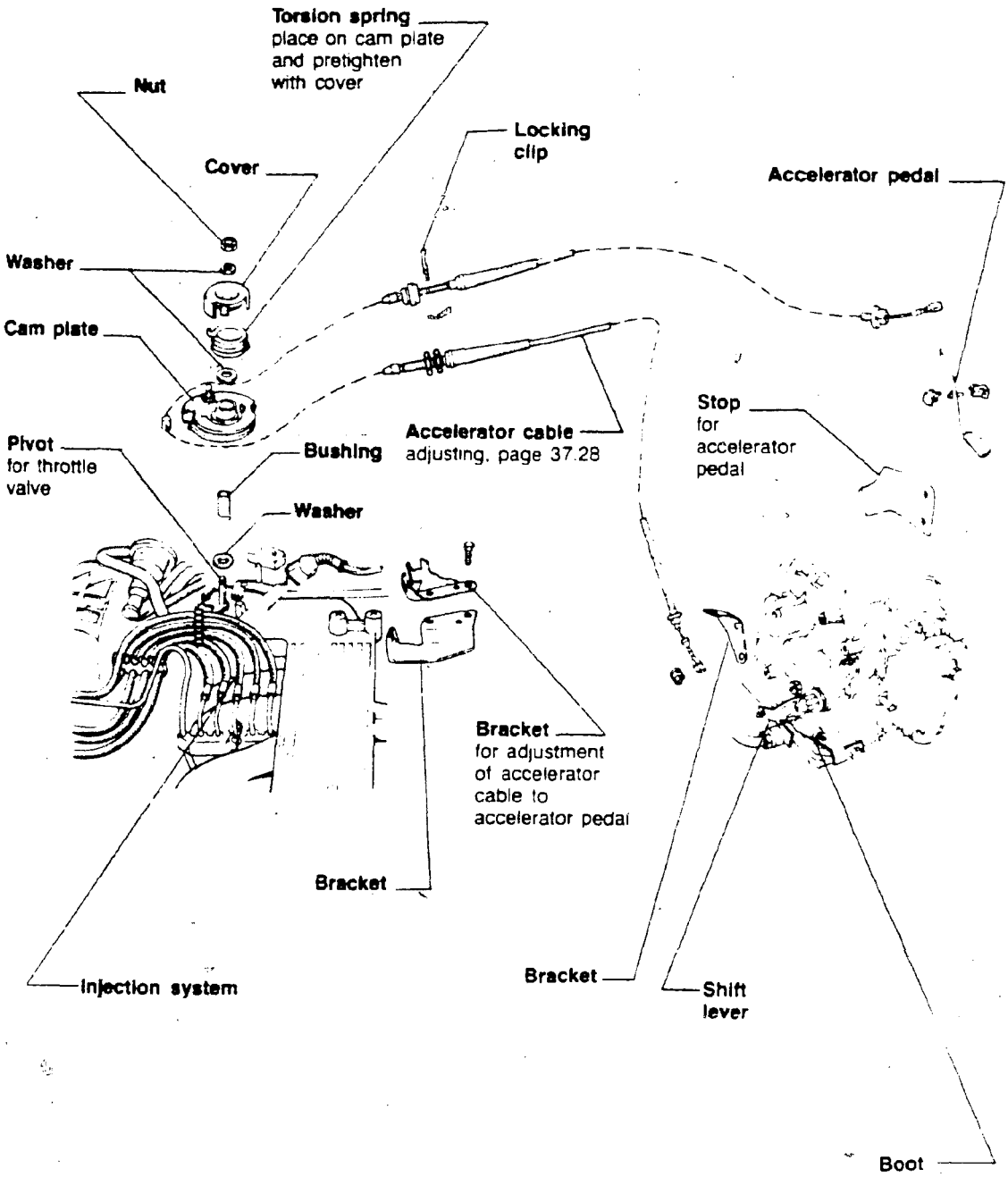

37-793

cardiagn.com

Throttle control, adjusting

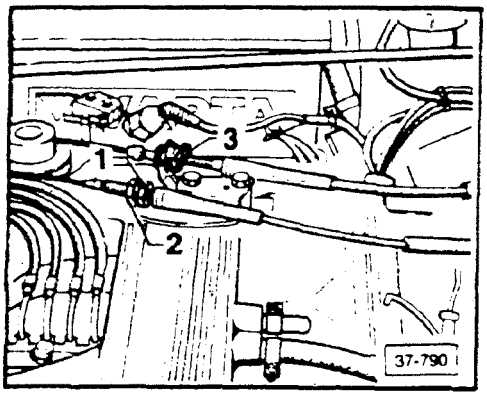

- remove covering for throttle control
- loosen nuts **1** and **2** and remove locking clip **3**
- turn throttle cable brackets to stop (full throttle) position and hold

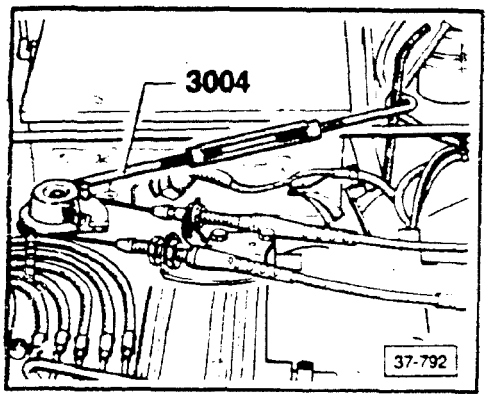

Note

Tool **3004** (two turnbuckles) can be used to hold the throttle cable brackets at full throttle. If tool **3004** is unavailable, use two turnbuckles (locally obtainable) of an appropriate size. Hook one end on the lever of the lower cable bracket and the other on the lower end of the hood gas strut.

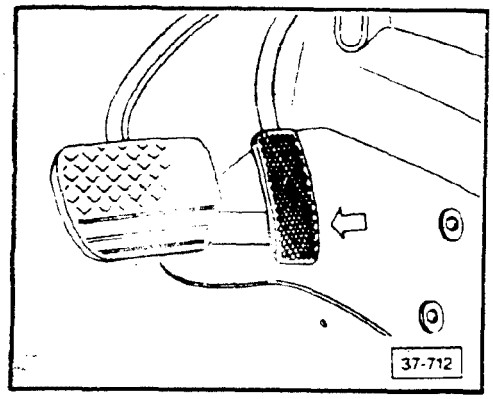

- insert a spacer 17 mm (11/16 in.) thick between accelerator pedal and pedal stop
- push accelerator pedal down to contact spacer and hold (two mechanics required)

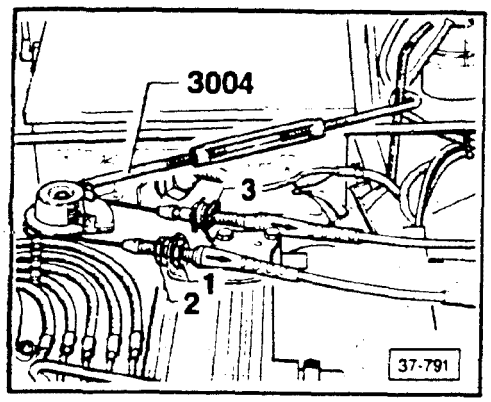

- pull accelerator pedal cable in direction of arrow and install locking clip **3**
- pull cable to transmission in direction of arrow until pressure against spring for transmission kickdown position is felt
- turn nut **1** against bracket and tighten nut **2**
- remove tool **3004** (turnbuckles)

cardiagn.com

Adjustment, checking

Throttle lever must rest against idle stop when accelerator pedal is released.

- press accelerator pedal to full throttle position (not kickdown)
  - the pressure point for full throttle position of the accelerator pedal must be approx. 15 to 20 mm (5/8 to 13/16 in.) away from the pedal stop
- press accelerator pedal to pedal stop (kickdown)
  - transmission operating lever must contact kickdown stop
  - spring between cable brackets must be stressed

cardiagn.com

Transmission, removing/installing

Removing

- disconnect battery ground strap
- remove upper engine transmission bolts
- disconnect transmission ground strap
- separate connections for speedometer and oxygen sensor
- install engine support **10-222 A**
- clamp off coolant hoses between engine and transmission

- raise vehicle
- remove engine cover and mounting support
- remove front engine support bolts

- remove front exhaust pipe
- remove starter
- remove 3 torque converter bolts (4 bolts on turbo vehicles)

- remove torque converter cover plate
- remove hose clamps on ATF cooler

- remove coolant hose from pipe
- remove cover plates for transmission mount and drive shaft
- remove axle shafts from transmission and tie up
- remove selector lever cable support and disconnect cable from transmission

- vehicles with seat belt tensioning system, remove cable guide

- disconnect accelerator rod
- disconnect accelerator cable and remove from transmission support
- remove both transmission supports from transmission mount
- raise transmission with hoist
- remove right and left transmission supports

- lower hoist and raise engine with engine support
  - this will slightly tilt the transmission, making it easier to remove

- remove remaining lower engine transmission bolts
- loosen ATF filler tube
- separate transmission from engine
- push right shaft toward front
- remove transmission carefully and secure torque converter from falling out

cardiagn.com

Installing

Proceed in reverse order of removing and note the following:

- install torque converter before installing transmission
- place converter carefully on one-way clutch support
  - do not tilt or misalign converter
- while pushing torque converter into place, turn converter back and forth to engage splines of pump shaft
  - torque converter must be seated up to stop on one-way clutch support
- install transmission
- check accelerator operation adjustment
- check selector lever cable, page 37.25

Tightening torques

Axle shaft to flange	80 Nm (59 ft lb)
Torque converter bolts	30 Nm (22 ft lb)
Transmission to engine	55 Nm (41 ft lb)

cardiagn.com

Shift points, checking

Check the shift points if the transmission shifts into the next gear too early or too late.

Drive the vehicle in all gear ranges under all possible road conditions. Do not road test if there is obvious mechanical damage.

Note

When checking shift points, note that speedometer readings may vary due to permissible manufacturing tolerances.

- note shift points and compare to chart
  - shifts must be smooth and take place quickly without lag in power transmission
- listen for any sign of engine speedup between shifts which indicates slipping brake bands or clutches
- after road testing, check transmission for fluid leaks

087 trans. code letters RBP

Shift points in mph (km/h)		
Shift	**Full throttle**	**Kickdown**
1-2	21-32 (34-51)	47-52 (75-83)
2-3	53-66 (86-107)	81-88 (131-141)
3-2	38-52 (61-84)	77-85 (124-136)
2-1	13-17 (21-28)	37-42 (60-68)

Note

If shift points are incorrect or transmission does not kick down, check throttle control pedal cable adjustments.

cardiagn.com

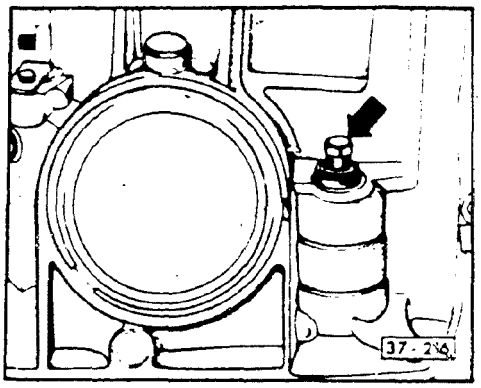

Main pressure, checking

Check main pressure only if defect cannot be found during other checks.

- attach gauge with 0-10 bar (0-145 psi) scale to connection (**arrow**)

- measure three different main pressures

Selector lever position	Accelerator pedal position	Main pressure bar (psi)
D	idle speed*	2.90-3.00 (42-44)
Test condition: accelerate to 50 km h (31 mph), release accelerator pedal (idle speed) and check pressure on gauge		

Selector lever position	Accelerator pedal position	Main pressure bar (psi)
D	full throttle*	6.80-6.90 (99-100)

Selector lever position	Accelerator pedal position	Main pressure bar (psi)
R	idle speed	9.00-10.00 (131-145)
Test condition: vehicle stationary		

*perform these tests on a dynamometer

- if specified values are not reached, check for the following faults (next page):

cardiagn.com

Fault	Remedy
oil pump defective	check pump for wear; replace if necessary
throttle control not properly adjusted	adjust throttle control
sticking control valve	disassemble and clean valve body; check valves for free movement

Torque converter code	Stall speed range in RPM
Q	2710-2960

CAUTION

Do not continue stall speed test longer than time required to read tachometer. Maximum stall speed test time is 5 seconds. Wait at least 20 seconds before repeating test.

Stall speed, checking

- Check stall speed only if vehicle exhibits poor performance or poor acceleration. Before measuring stall speed, check that the correct torque converter is installed.

Note

The stall speed is lower with increasing height above sea level (approximately 125 RPM per 3000 feet).

- connect tachometer, VW 1367
- engage parking brake
- start and warm engine
- hold foot brake firmly, put selector lever in **D** and depress accelerator briefly to full throttle
- check that engine runs within stall speed range

cardiagn.com

Index

087 3-speed Automatic

Pump shaft
- length 38.35

Transmission
- assembly 38.34
- installing on repair stand 38.35

Transmission/final drive
- end play, adjusting 38.38
- shim, determining 38.39

Turbine shaft
- length/checking 38.35
- seal, removing/installing 38.36

Valve body
- removing/installing 38.41

cardiagn.com

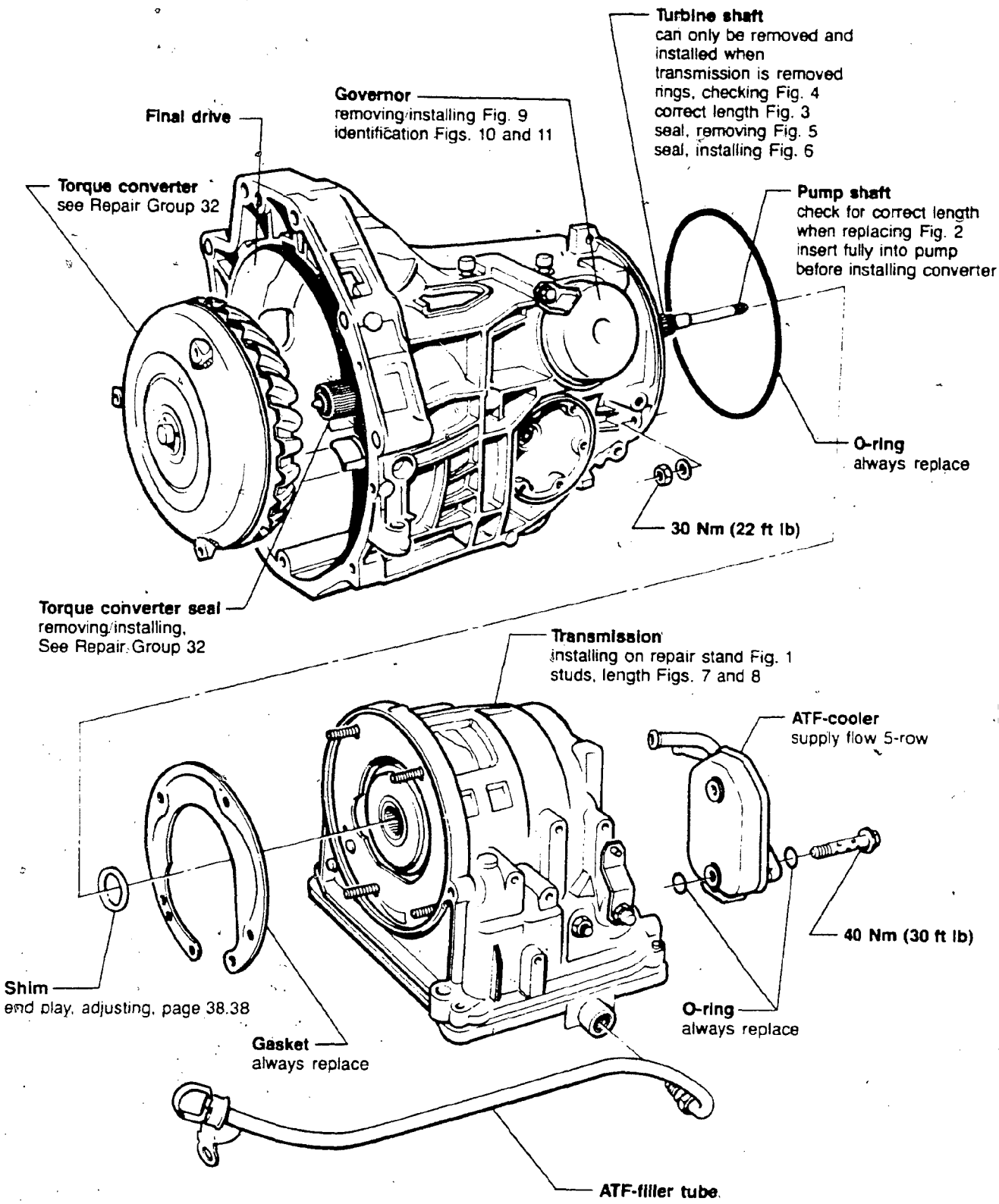

Note

After repair work on final drive or transmission, check end play and adjust if necessary (page 38.38).

37-729

cardiagn.com

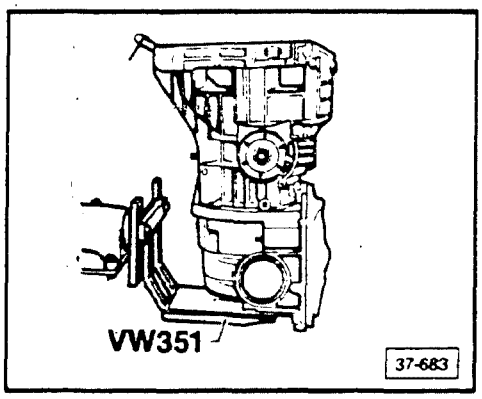

▶ **Fig. 1 Transmission, installing on repair stand**

- drain ATF and remove ATF-cooler
- mount transmission as shown

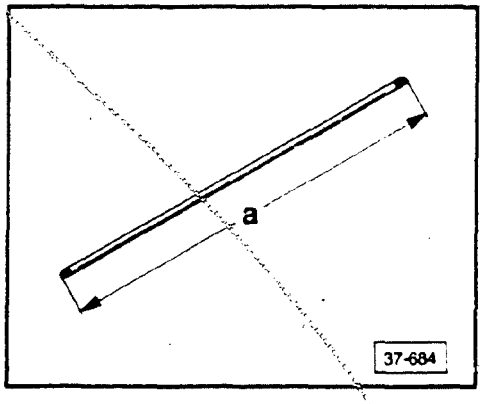

▶ **Fig. 2 Pump shaft, length**

- **a** = 513 mm (20.2 in.)

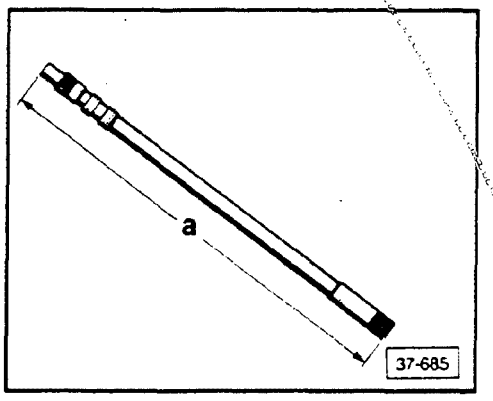

▶ **Fig. 3 Turbine shaft, length**

- turbine shafts are available in different lengths; measure before installation
  - **a** = 424.5 mm (16.7 in.)

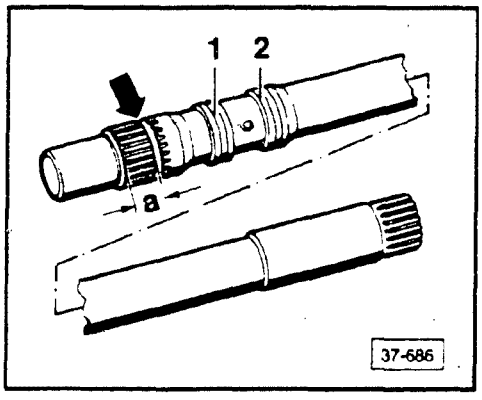

▶ **Fig. 4 Turbine shaft rings, checking**

- the length of the spline **a** in the forward coupling is limited by a circlip (**arrow**). Check rings **1** and **2** for correct seating

CAUTION

Never install shaft without circlip.

cardiagn.com

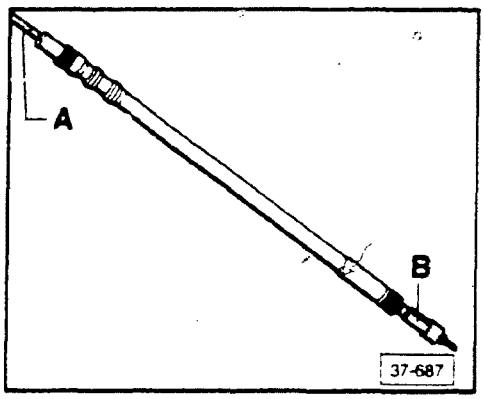

▶ **Fig. 5 Turbine shaft seal, removing**

- pull out sealing ring with puller **B** (e.g. **US 1010** or **Kukko 21-1**)
  - use an old oil pump shaft or suitable round rod **A** as a drift

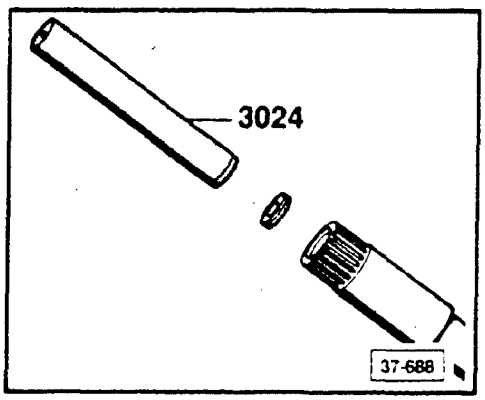

▶ **Fig. 6 Turbine shaft sealing ring, installing**

- insert seal so that the open side faces outward
- push seal in to stop

Note

In turbine shafts with seal only use pump shaft with tapered spline ends.

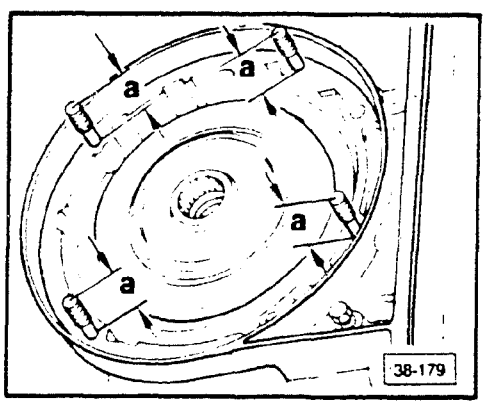

▶ **Fig. 7 Front studs, length**

a = 31.5 mm (1 1.4 in.)

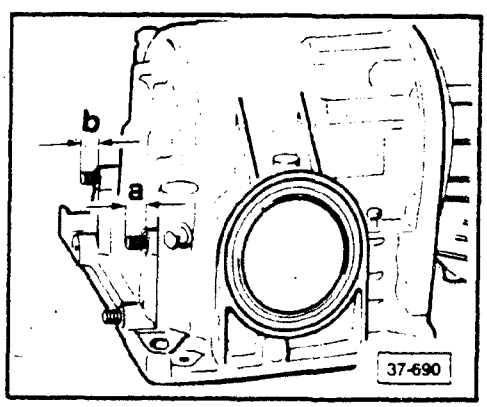

▶ **Fig. 8 Rear stud bolts, length**

a and **b** = 22 mm (0.866 in.)

Note

Housings are shipped as replacement parts without studs. Tighten studs to the indicated lengths during assembly.

cardiagn.com

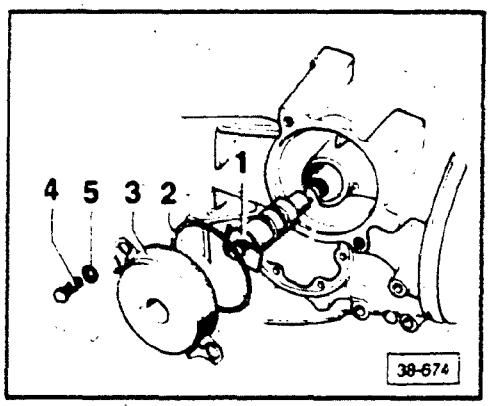

▶ **Fig. 9 Governor, removing/installing**

1 — Governor
2 — O-ring
- always replace

3 — Governor cover
4 — Bolt
5 — Lock washer

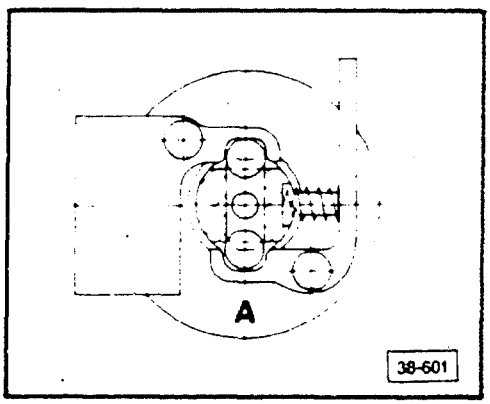

▶ **Fig. 10 Governor, identification**

- an identification letter is stamped on the governor head
- governor identification letter **A**

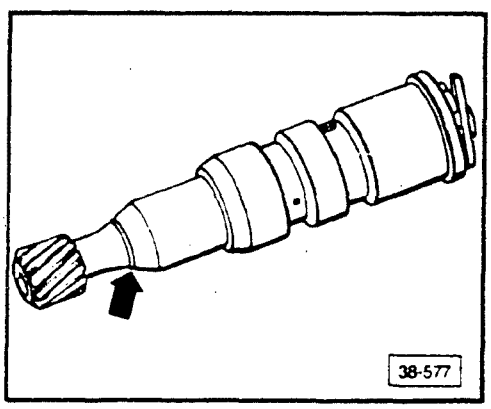

▶ **Fig. 11 Governor, identification**

- groove on governor shaft (**arrow**)

cardiagn.com

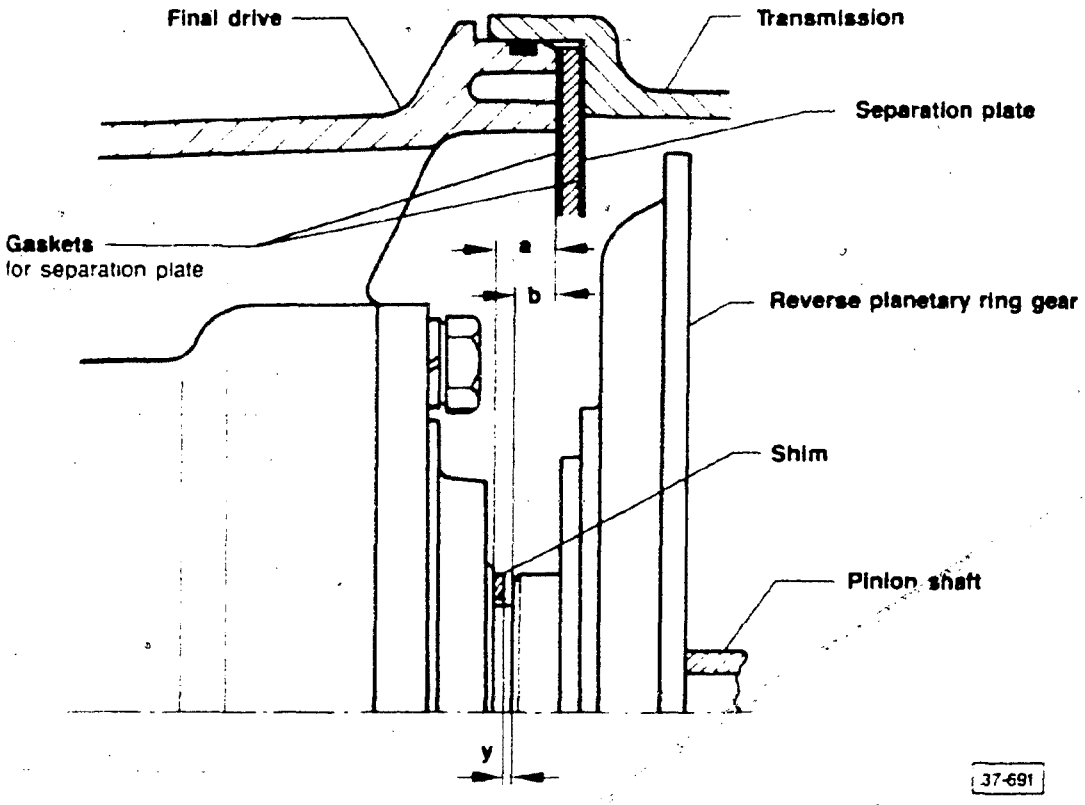

Note

The end play **y** between transmission and final drive must be adjusted to limit the end play of the reverse planetary ring gear.

Measurement points:

a — Final drive housing: joint to oil seal sleeve
b — transmission housing: shim contact shoulder to separation plate with gasket

Note

Sequence for determining the shim for the transmission/final drive, see next page.

cardiagn.com

Shim for transmission/final drive, determining

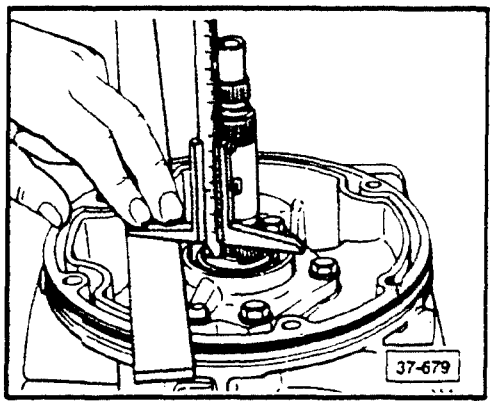

- measure dimension **a** on final drive
- put straightedge on case and measure to seal sleeve

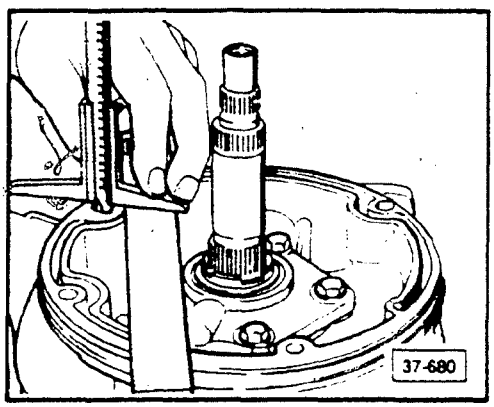

- measure from straightedge to final drive housing joint

Example

from straightedge to sleeve	18.7 mm
from straightedge to housing joint	– 8.0
dimension **a**	= 10.7 mm

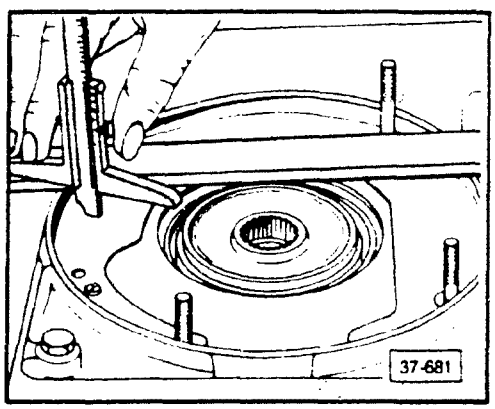

- measure dimension **b** on transmission
- put straightedge on case (housing) and measure to gasket

cardiagn.com

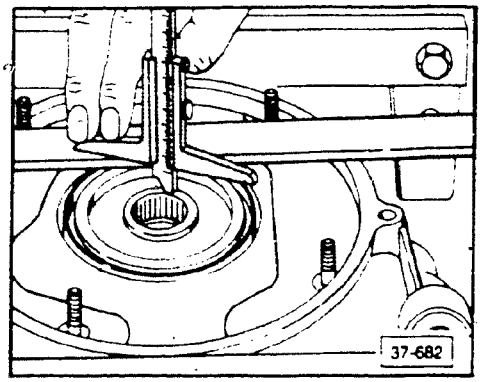

- measure from straightedge to shim shoulders

Example:

from straightedge to gasket	19.2 mm
from straightedge to shoulder	– 10.0 mm
dimension **b**	= 9.2 mm

- determine dimension **x**
  - **x** = a – b

Example:

dimension **a**	10.7 mm
dimension **b**	– 9.2 mm
dimension **x**	= 1.5 mm

- select shims from the following table:

Dimension x (mm)	Shims (mm)
0.23 . . . 0.84	none
0.85 . . . 1.24	1 x 0.4
1.25 . . . 1.64	2 x 0.4
1.65 . . . 2.04	1 x 1.2
2.05 . . . 2.44	1 x 0.4 1 x 1.2
2.45 . . . 2.84	2 x 0.4 1 x 1.2
0.85 . . . 3.24	2 x 1.2
3.25 . . . 3.64	1 x 0.4 2 x 1.2
3.65 . . . 3.88	2 x 0.4 2 x 1.2

Available shims

0.4 mm — part number 010 323 345 A
1.2 mm — part number 010 323 346 A

CAUTION

Part numbers are for reference only. Always check with your Parts Department for latest information.

cardiagn.com

Note

The valve body can be removed with transmission in vehicle.

After installing oil pan: refill with ATF and check ATF fluid level.

CAUTION

Do not run engine or tow vehicle when oil pan is off or with no oil in transmission.

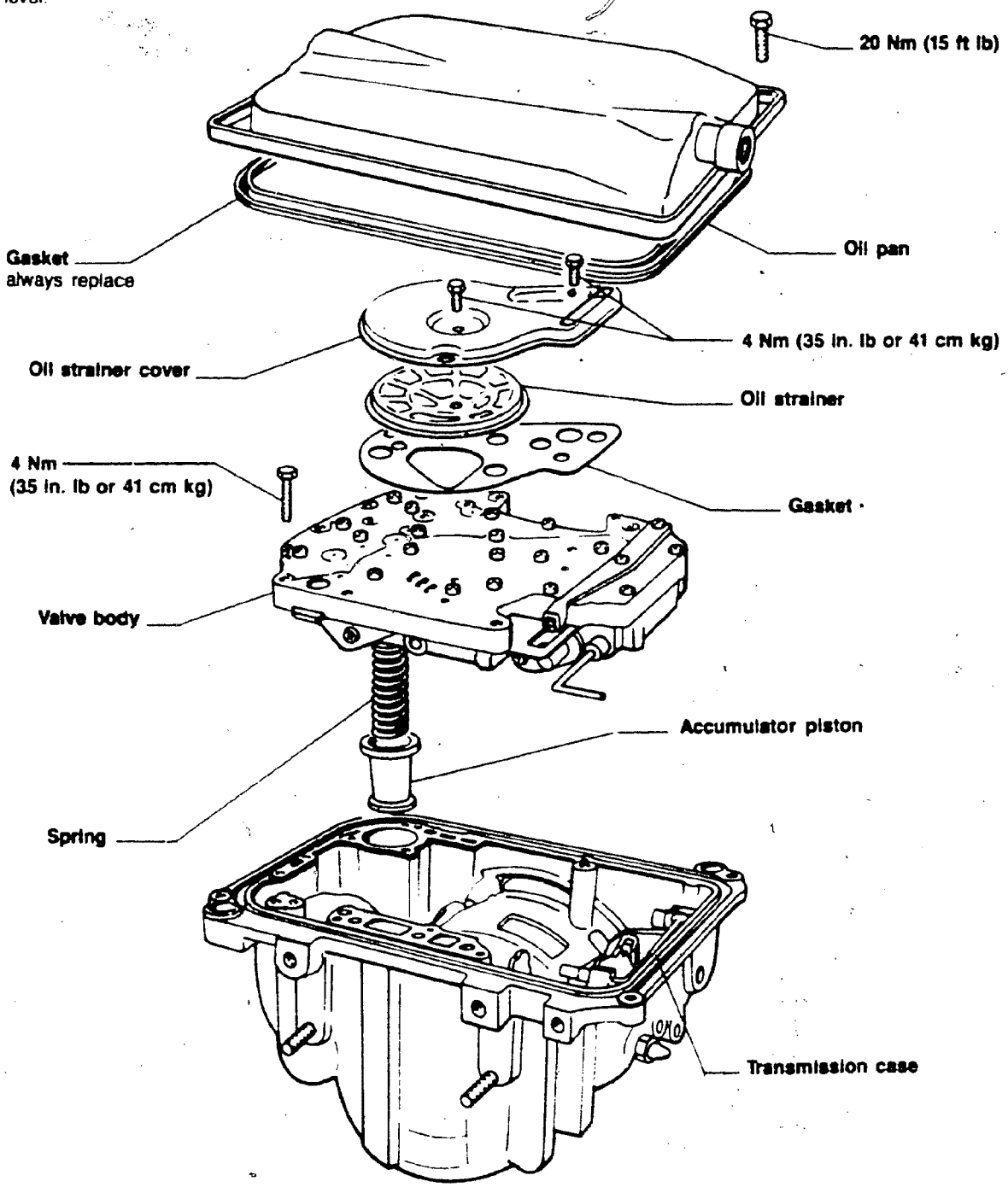

cardiagn.com

Index

089 3-speed Automatic

ATF pump
- assembly 38.20

Direct/reverse gear clutch
- identification 38.13
- installing 38.11

First/reverse gear clutch
- clutch, checking 38.11
- piston, installing 38.10

Forward clutch
- assembly 38.21
- assembly, checking 38.22
- clutch drum 38.22
- end play 38.22
- installing 38.11

Governor
- identifying 38.5
- removing/installing 38.5

One way clutch
- assembly 38.18
- installing 38.12
- removing 38.10

Pump shaft
- length 38.3

Reverse planetary ring gear
- assembly 38.17
- installing 38.13

Second gear brake band
- adjusting 38.13
- checking 38.12

Second gear brake band piston
- assembly 38.17
- cover 38.16
- installing 38.11
- push rod length 38.16
- removing 38.10
- seals 38.16

Transmission
- assembling/disassembling 38.9

Transmission/final drive
- assembly 38.2
- end play, adjusting 38.6
- separating 38.3

Transmission housing studs
- installing 38.4

Turbine shaft
- length 38.3
- seals, checking 38.3
- seals, removing/installing 38.4

Direct/reverse clutch
- assembly 38.23
- checking 38.26
- clutch drum 38.24
- end play 38.24

Parking lock
- assembly 38.33

Valve body
- assembly 38.26, 38.28, 38.31
- disassembling/assembling 38.30
- identifying 38.29
- installing 38.27
- spring table 38.32

cardiagn.com

Note

Final drive transmission oil seal is installed in the final drive, but sealing lip fits a shoulder on the governor drive gear in transmission.

If only the oil seals are to be replaced, the transmission and final drive must not be tilted when separating to prevent leakage and mixing.

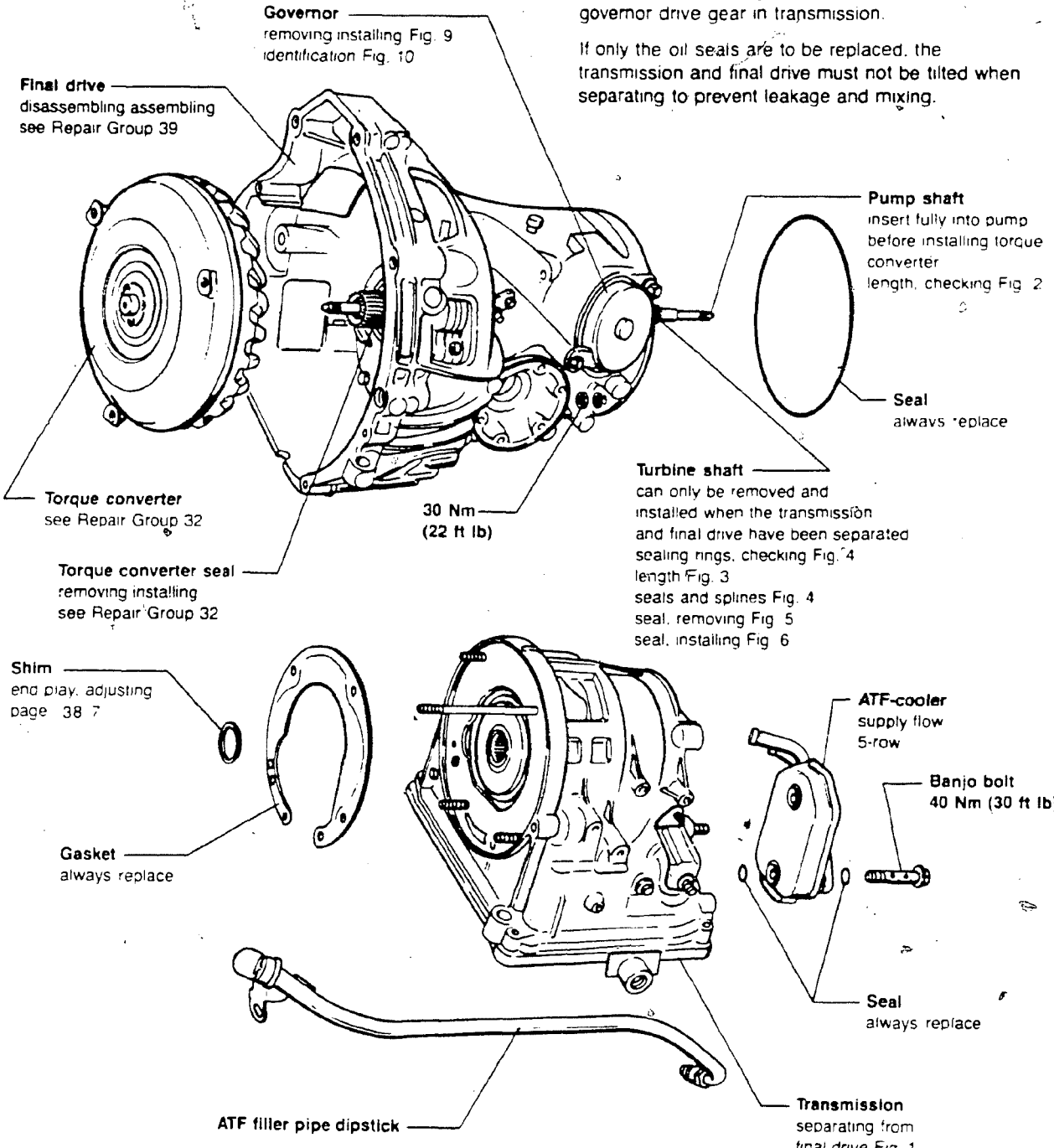

CAUTION

When replacing the final drive or transmission, end play must be checked and adjusted if necessary.

37-665

D-2

cardiagn.com

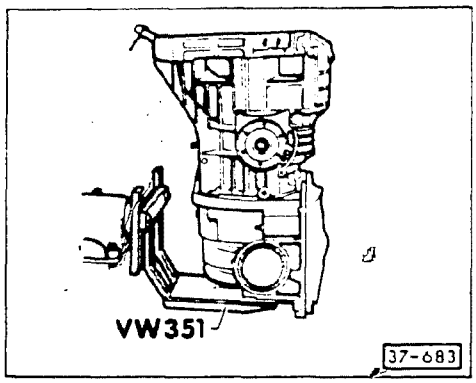

▶ **Fig. 1 Transmission/Final drive, separating**
- drain ATF
- drain oil from final drive
- remove ATF cooler
- mount to repair stand as shown
- remove final drive

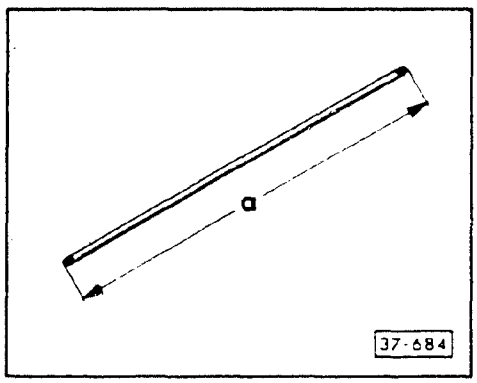

▶ **Fig. 2 Pump shaft, length**

- **a** = 479.6 mm (18.882 in)

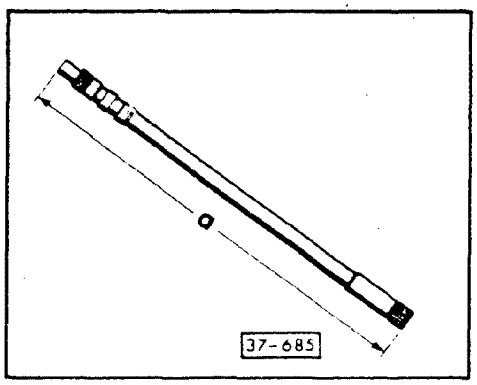

▶ **Fig. 3 Turbine shaft, length**

- **a** = 390.2 mm (15.36 in.)
- turbine shafts are available in various lengths; measure before installing

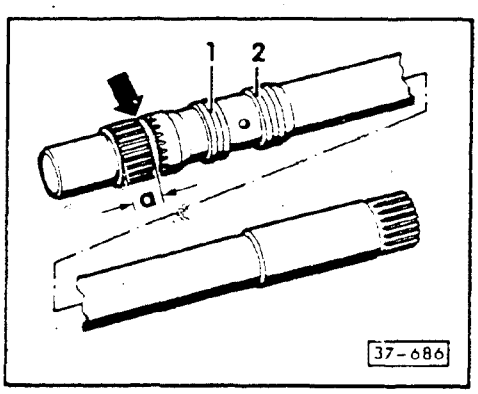

▶ **Fig. 4 Turbine shaft seals and splines, checking**

- length of splines **a** in forward clutch is limited by a circlip (**arrow**)
- check rings **1** and **2** for wear and correct installation

CAUTION

Never install shaft without circlip.

cardiagn.com

CONTINUED IN THE

BEGINNING OF NEXT ROW

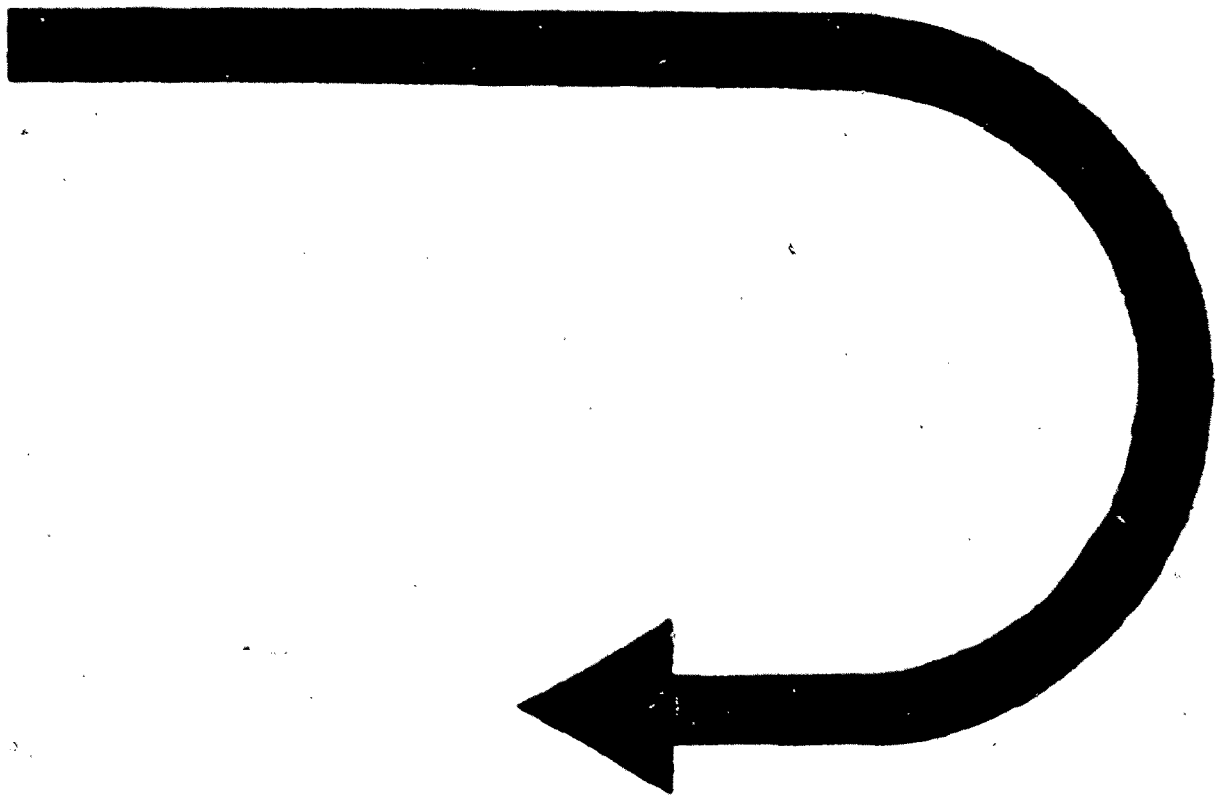

cardiagn.com

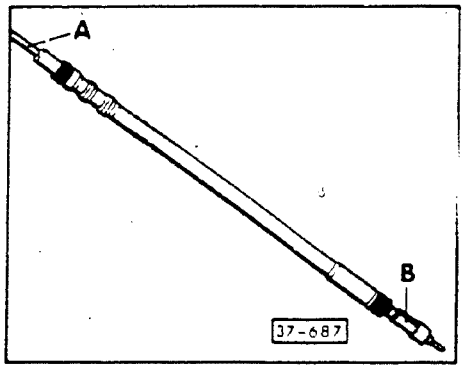

▶ **Fig. 5 Turbine shaft seal, removing**

- remove seal with suitable puller
  - **A** = round bar or old pump shaft
  - **B** = **US 1010** or **Kukko 21/1**

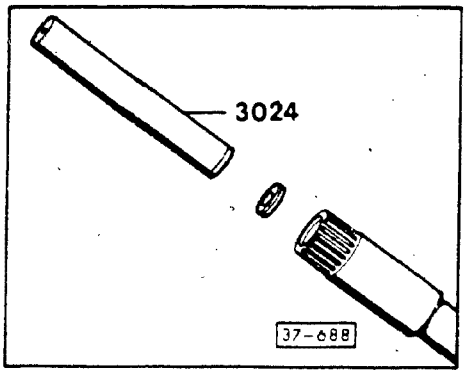

▶ **Fig. 6 Turbine shaft seal, installing**

- install seal with open end to outside
- drive seal in until seated

Note

A turbine shaft with a seal can only be used with a pump shaft with tapered splines.

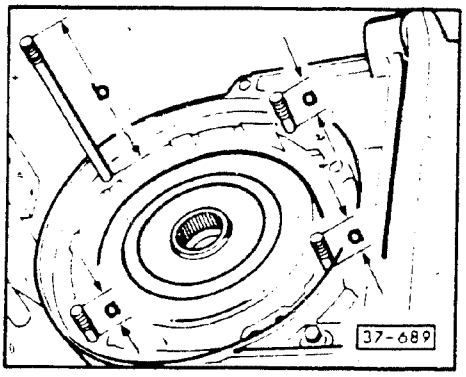

▶ **Fig. 7 Transmission housing front studs, installing**

- **a** = 31.5 mm (1-1/4 in)
- **b** = 138.0 mm (5-7/16 in)

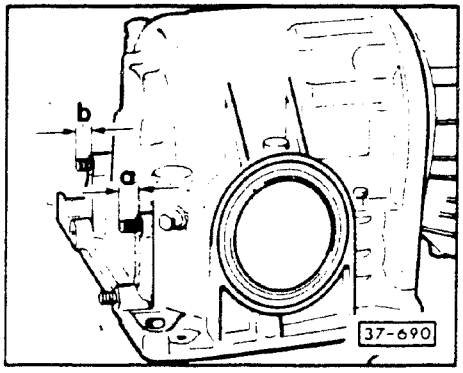

▶ **Fig. 8 Transmission housing rear studs, installing**

- **a** = 18 mm (23/32 in)
- **b** = 18 mm (23/32 in)

Note

If removed, install studs to the specified length.

cardiagn.com

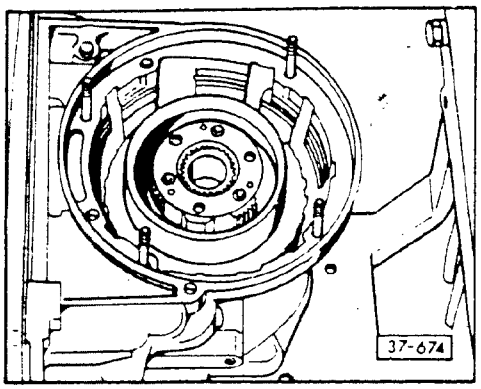

▶ **Fig. 9 Governor, removing/installing**

1 — governor
2 — seal
- always replace

3 — cover
4 — bolt
5 — spring washer

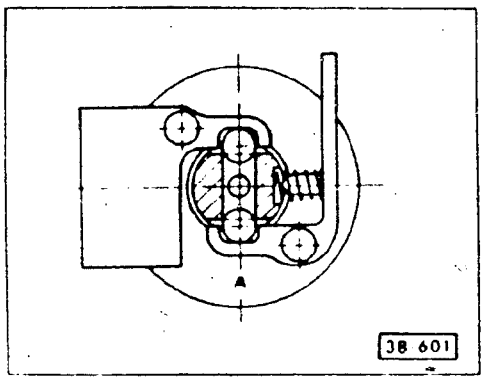

▶ **Fig. 10 Governor, identification**

- code letter is stamped on governor head

Transmission application	Governor code letter
all with gasoline engine	A

cardiagn.com

Transmission/Final drive end play, adjusting

Note

End play **y** between transmission and final drive must be adjusted to limit reverse planetary ring gear end play.

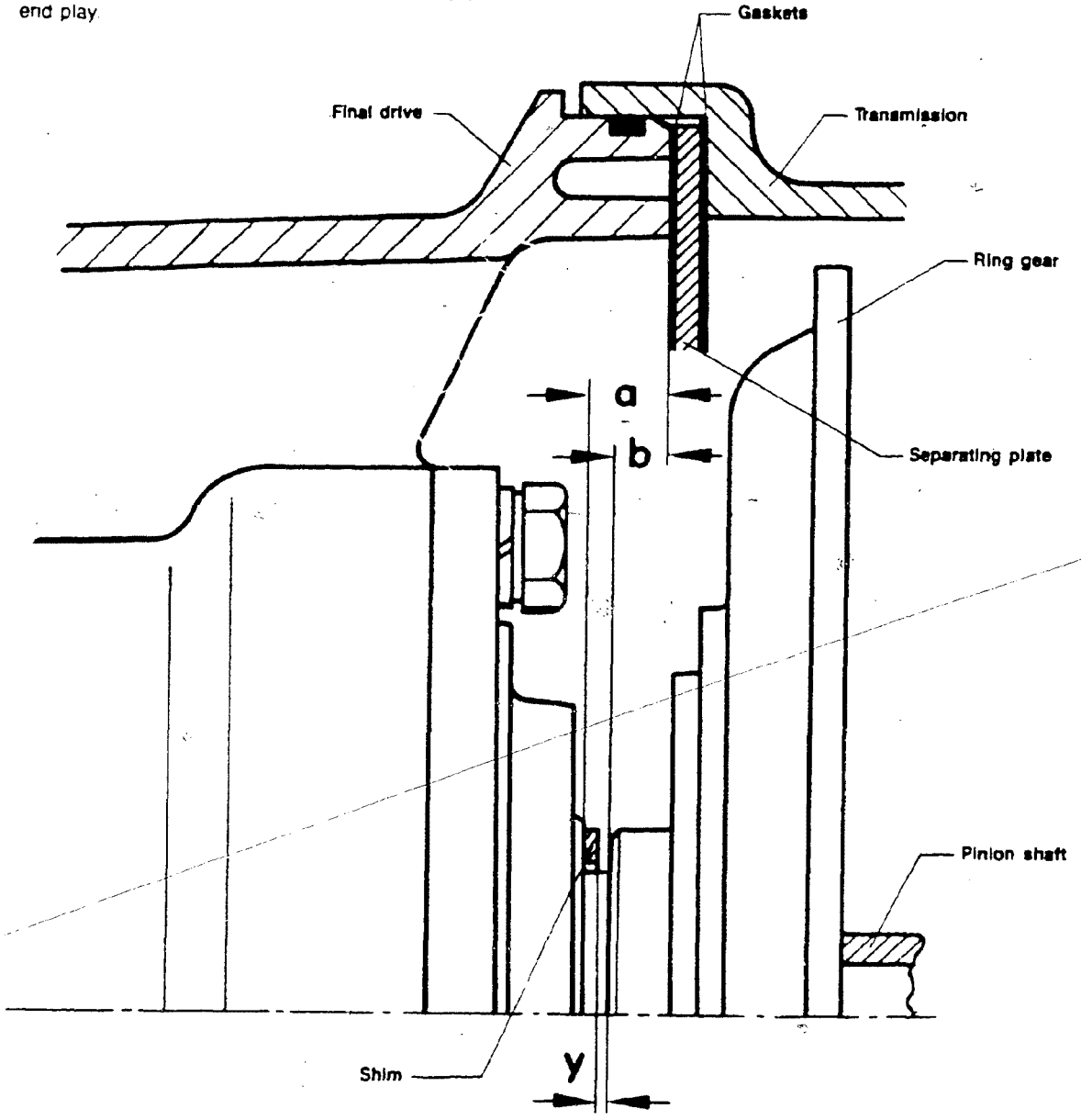

Measuring points

- a – **Final drive:** housing joint surface to oil seal sleeve
- b – **Transmission:** shoulder for shim to separating plate gasket

37-691

D-6

cardiagn.com

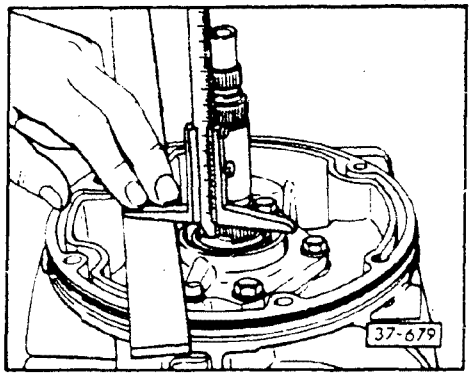

Dimension "a," measuring

- measure from straight edge to oil seal sleeve

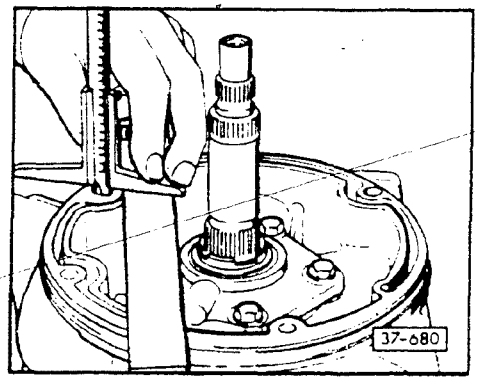

- measure from straight edge to final drive joint surface

Example

straight edge to oil seal sleeve	18.7 mm
straight edge to joint surface	– 8.0 mm
dimension **a**	= **10.7 mm**

Dimension "b," measuring

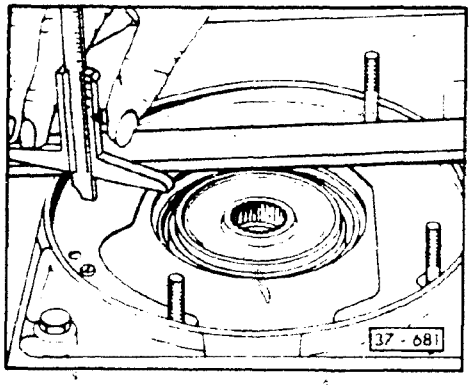

- measure from straight edge on housing to gasket on plate

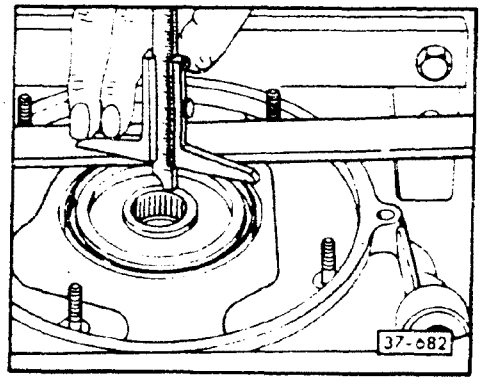

- measure from straight edge to shoulder for shim

Example

straight edge to gasket	19.2 mm
straight edge to shoulder	– 10.0 mm
dimension **b**	= **9.2 mm**

cardiagn.com

Shim thickness, determining

- subtract **b** from **a** to get **x** (shim thickness)

Example

dimension **a**		10.7 mm
dimension **b**	–	9.2 mm
dimension **x**	=	**1.5 mm**

Dimension x mm	Shim mm
0.23 - 0.84	no shim
0.85 - 1.24	1 x 0.4
1.25 - 1.64	2 x 0.4
1.65 - 2.04	1 x 1.2
2.05 - 2.44	1 x 0.4
	1 x 1.1
2.45 - 2.84	2 x 0.4
	1 x 1.2
2.85 - 3.24	2 x 1.2
3.25 - 3.64	1 x 0.4
	2 x 1.2
3.65 - 3.88	2 x 0.4
	2 x 1.2

- select shim from table
- two shim thicknesses are available
  - 0.4 mm — Part No. **010 323 345 A**
  - 1.2 mm — Part No. **010 323 346 A**

CAUTION

Part numbers are for reference only. Always consult your Parts Department for latest information.

cardiagn.com

This page intentionally left blank

cardiagn.com

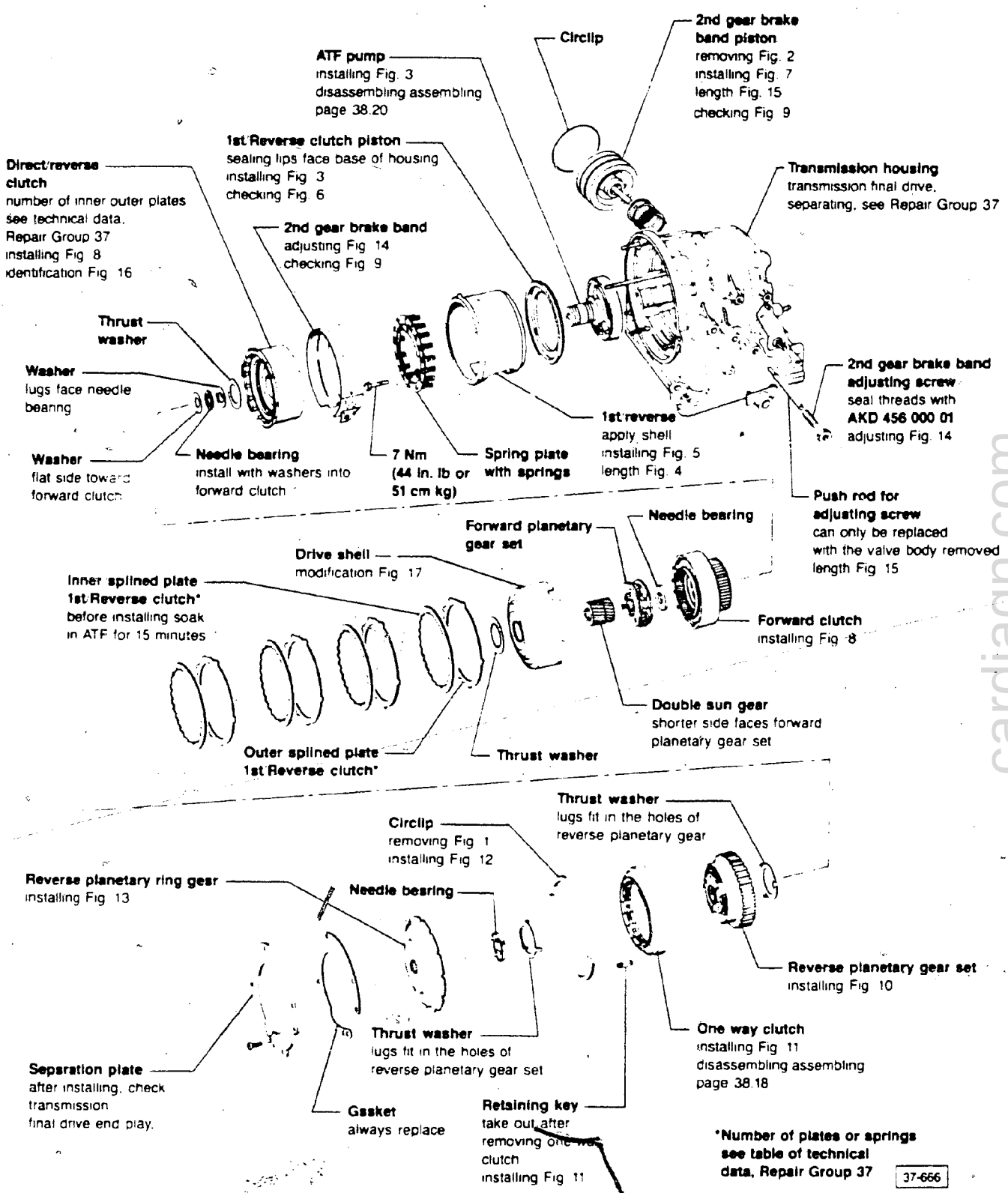

cardiagn.com

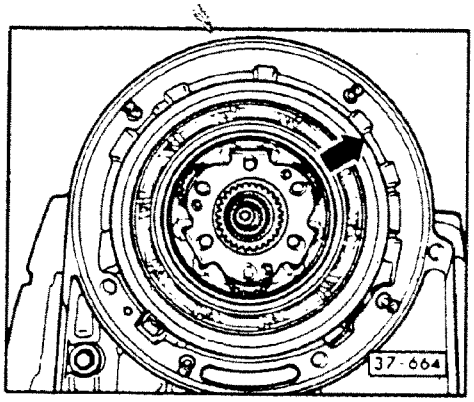

▶ **Fig. 1 Circlip/one-way clutch, removing**

- remove circlip from groove (**arrow**)
- pull out clutch

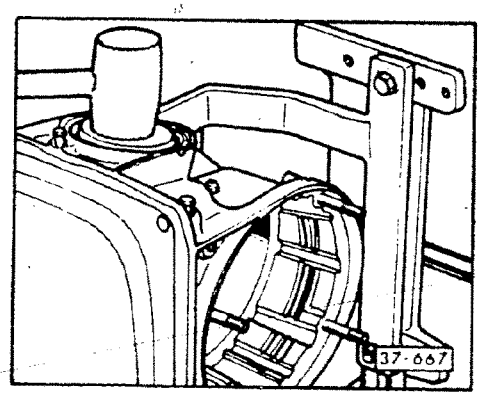

▶ **Fig. 2 2nd gear brake band piston, removing**

- take out retaining ring and remove piston by tapping lightly on cover with a rubber hammer

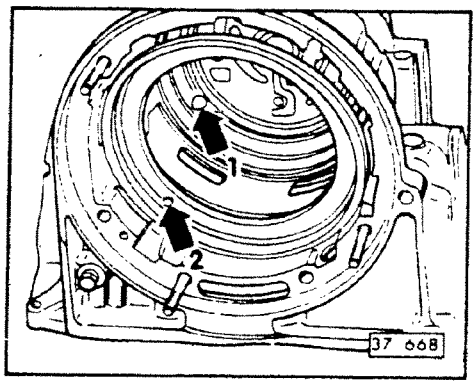

▶ **Fig. 3 1st/reverse clutch piston, installing**

- lubricate piston with ATF
- push piston onto ATF pump and fit ATF pump into the transmission housing with the thin rib facing upwards
- align the piston ball valve (**arrow 2**) with the hole in transmission housing (**arrow 1**)

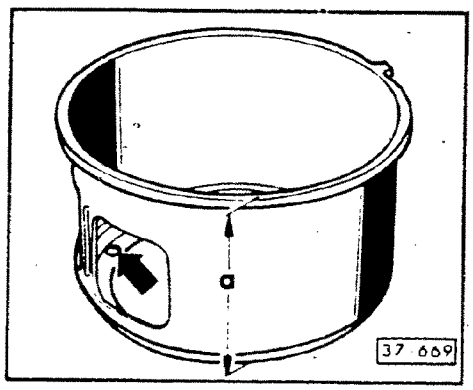

▶ **Fig. 4 Apply shell, measuring**

- dimension **a** is based on the number of inner outer splined plates
  - **a** = 100.5 mm (3.957 in) for 3 inner 3 outer plates
  - **b** = 97.00 mm (3.819 in) for 4 inner 4 outer plates
  - the hole (**arrow**) must align with the piston ball valve.

cardiagn.com

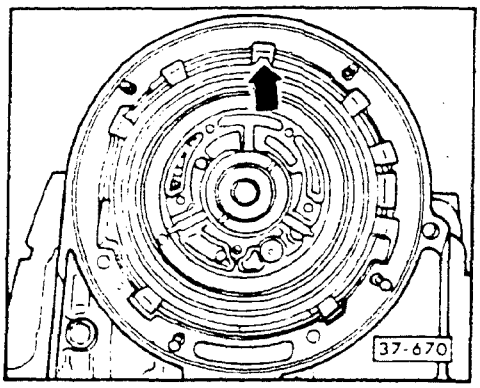

Note

See technical data in Repair Group 37 for number of inner/outer splined plates.

▶ **Fig. 5 Apply shell, installing**

- insert lug (**arrow**) in the groove shown

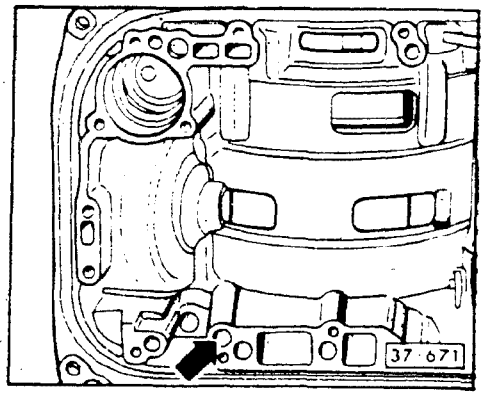

▶ **Fig. 6 1st/reverse gear clutch, checking**

- apply low air pressure to port (**arrow**)
  - piston must compress springs
  - piston must return to original position when air pressure is released

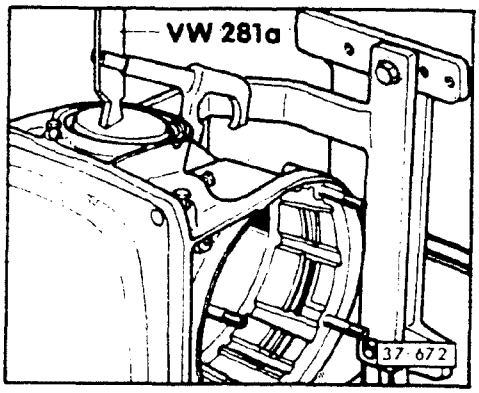

▶ **Fig. 7 2nd gear brake band piston, installing**

- press piston down and install circlip
- install 2nd gear brake band

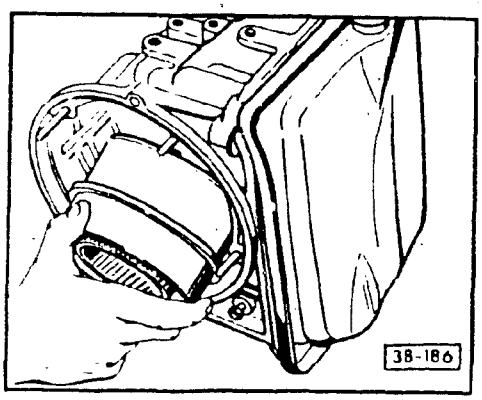

▶ **Fig. 8 Direct/reverse and forward clutches, installing**

Note

Assemble direct/reverse and forward clutches before installing into transmission case.

- tilt transmission housing downward and slide clutches onto neck of pump
- tilt transmission housing upward and check needle bearing for fit on oil pump neck

cardiagn.com

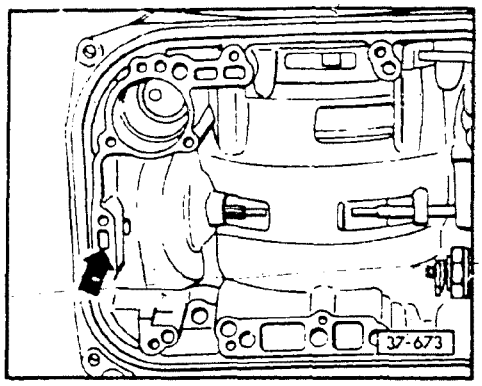

▶ **Fig. 9 2nd gear brake band, checking**

- apply low air pressure to port (**arrow**)
  - brake band must apply
  - brake band must return to original position when air pressure is released

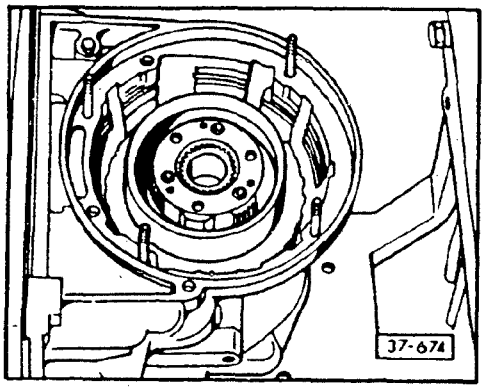

▶ **Fig. 10 Reverse planetary gear set, installing**

- install planetary gear set
- insert splined plates

Note

Soak plates in ATF for 15 minutes before installing.

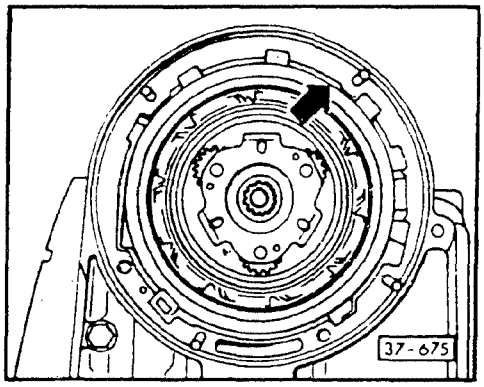

▶ **Fig. 11 One-way clutch, installing**

- install pre-assembled one-way clutch and retaining key
  - parts have been assembled properly if the groove for circlip is exposed (**arrow**)
  - it must **not** be possible to turn the planetary gear set counterclockwise

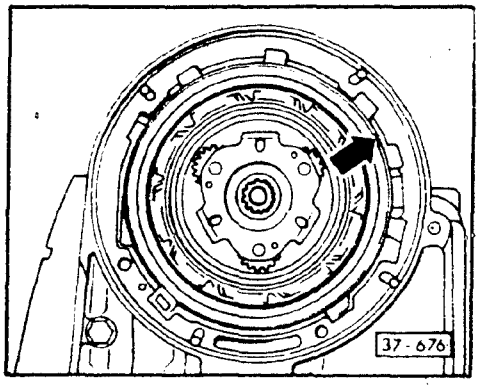

▶ **Fig. 12 Circlip, installing**

- circlip opening (**arrow**) must be opposite the retaining key

cardiagn.com

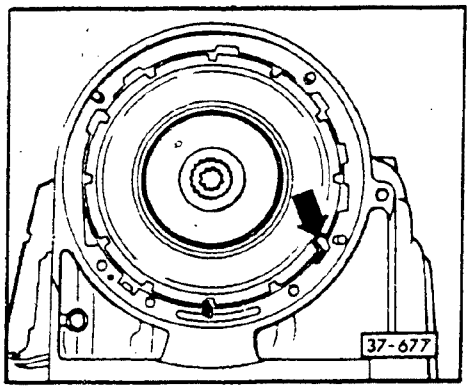

▶ **Fig. 13 Reverse planetary ring gear, installing**

- planetary gear notches must be centered with parking lock pawl (**arrow**)

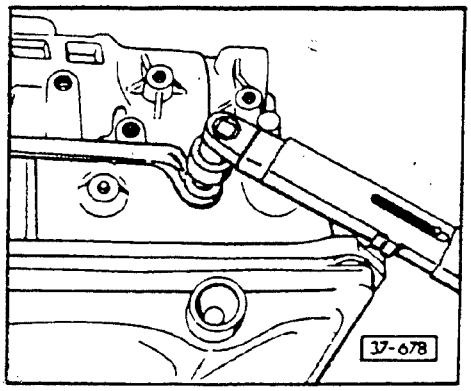

▶ **Fig. 14 2nd gear brake band, adjusting**

Note

Coat adjusting screw threads with sealant **AKD 450 000 01**.

- with locknut loosened, tighten adjusting screw to 10 Nm (7 ft lb)
- loosen, then retighten to 5 Nm (44 in. lb or 51 cm kg)
- loosen from this position, exactly:
  - 2-1/2 turns
  - see Technical Data in Repair Group 37
- tighten locknut

CAUTION

Transmission must be horizontal when adjusting brake band; otherwise band may jam.

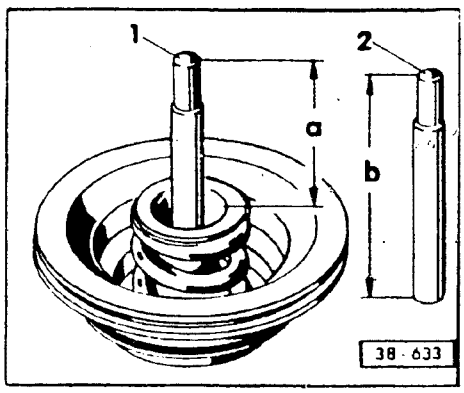

▶ **Fig. 15 Piston/push rod, length**

1 — 2nd gear brake piston push rod
2 — push rod for adjusting screw

D & R Clutch	dimension a (mm)	dimension b (mm)
134 mm diameter	50	92.5
140 mm diameter	52.4	82.5

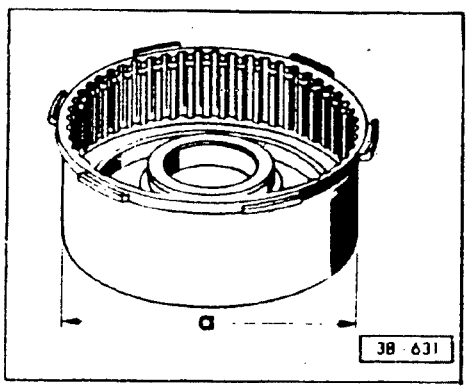

▶ **Fig. 16 Direct/Reverse clutch, identification**

	dimension a
D & R clutch	134 mm
Larger D & R clutch	140 mm

D-14

cardiagn.com

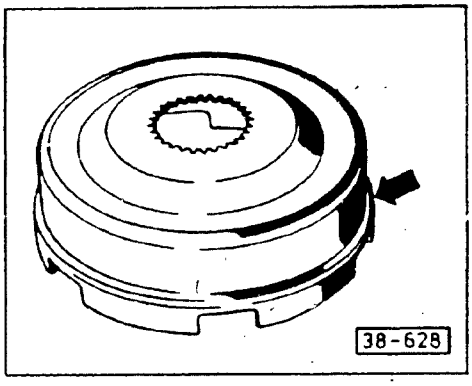

▶ **Fig. 17 Drive shell, modification**

- drive shell is wider to fit larger D & R clutch
- drive shell is identified by shoulder (**arrow**)

Note

Larger drive shell can only be used with larger (140 mm) direct/reverse clutch.

cardiagn.com

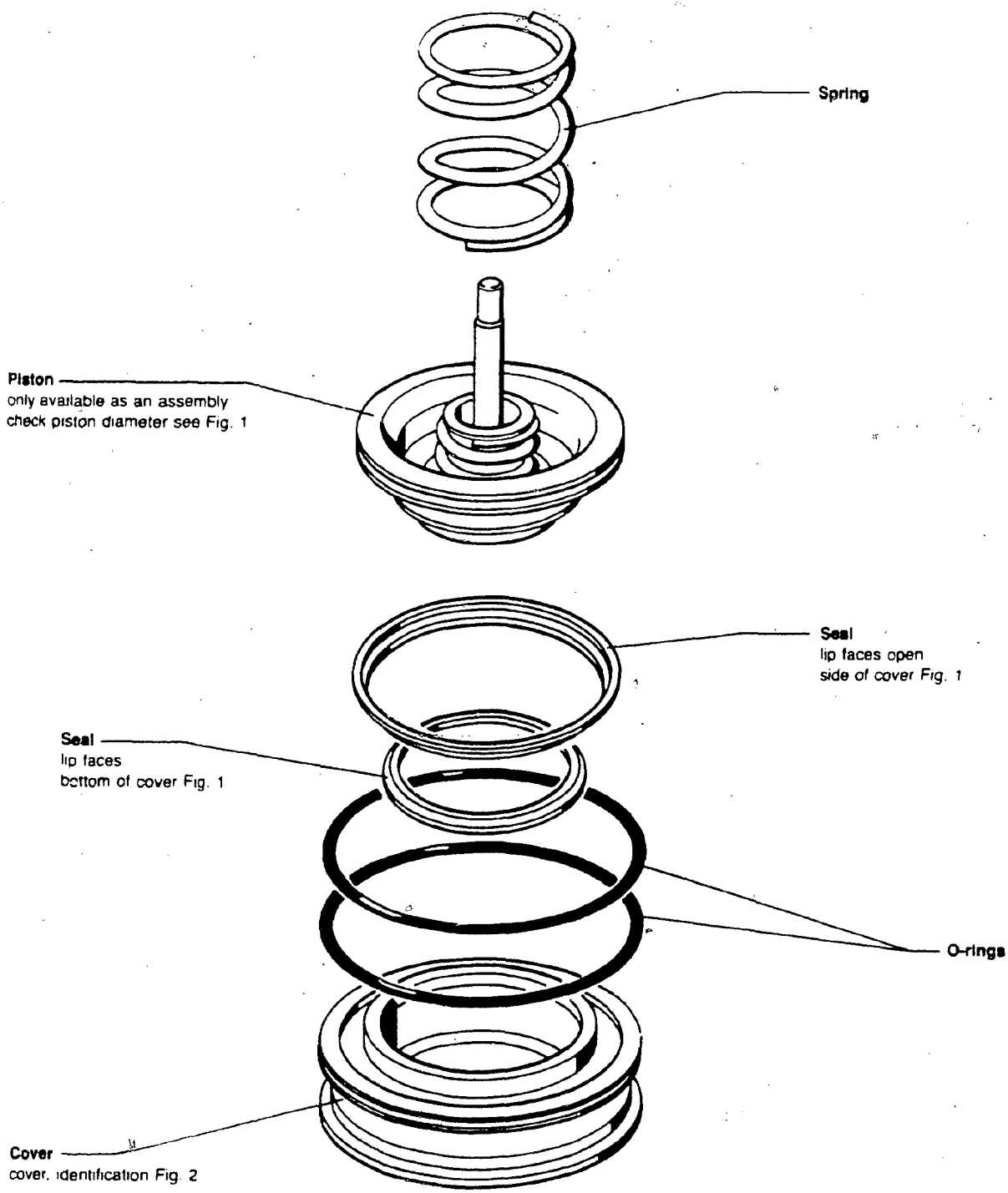

38-677

cardiagn.com

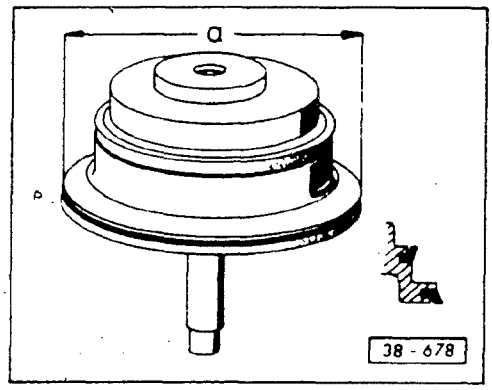

▶ **Fig. 1 Piston and piston seals, positioning**

- **a** = 96.5mm (3.800 in)

Note

The piston, pressure plate, washer, spring and push rod are rivetted and must be replaced as an assembly.

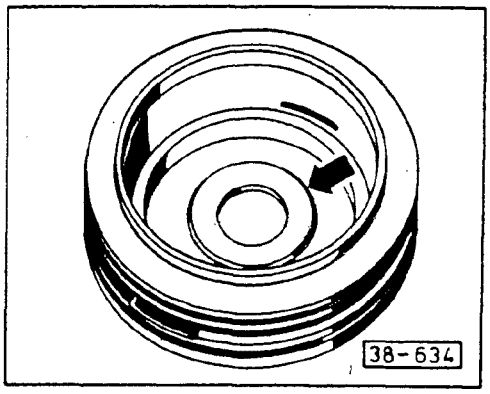

▶ **Fig. 2 2nd gear brake band piston cover, identification**

- recess in cover (**arrow**) provides clearance for rivetted piston assembly

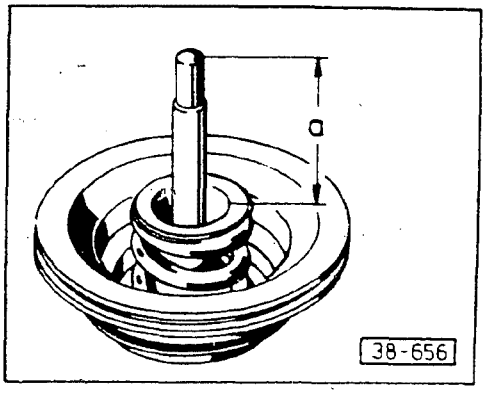

▶ **Fig. 3 Piston/push rod, length**

	Dimension **a**
134 mm diameter D & R clutch	50 mm
140 mm diameter D & R clutch	40 mm

cardiagn.com

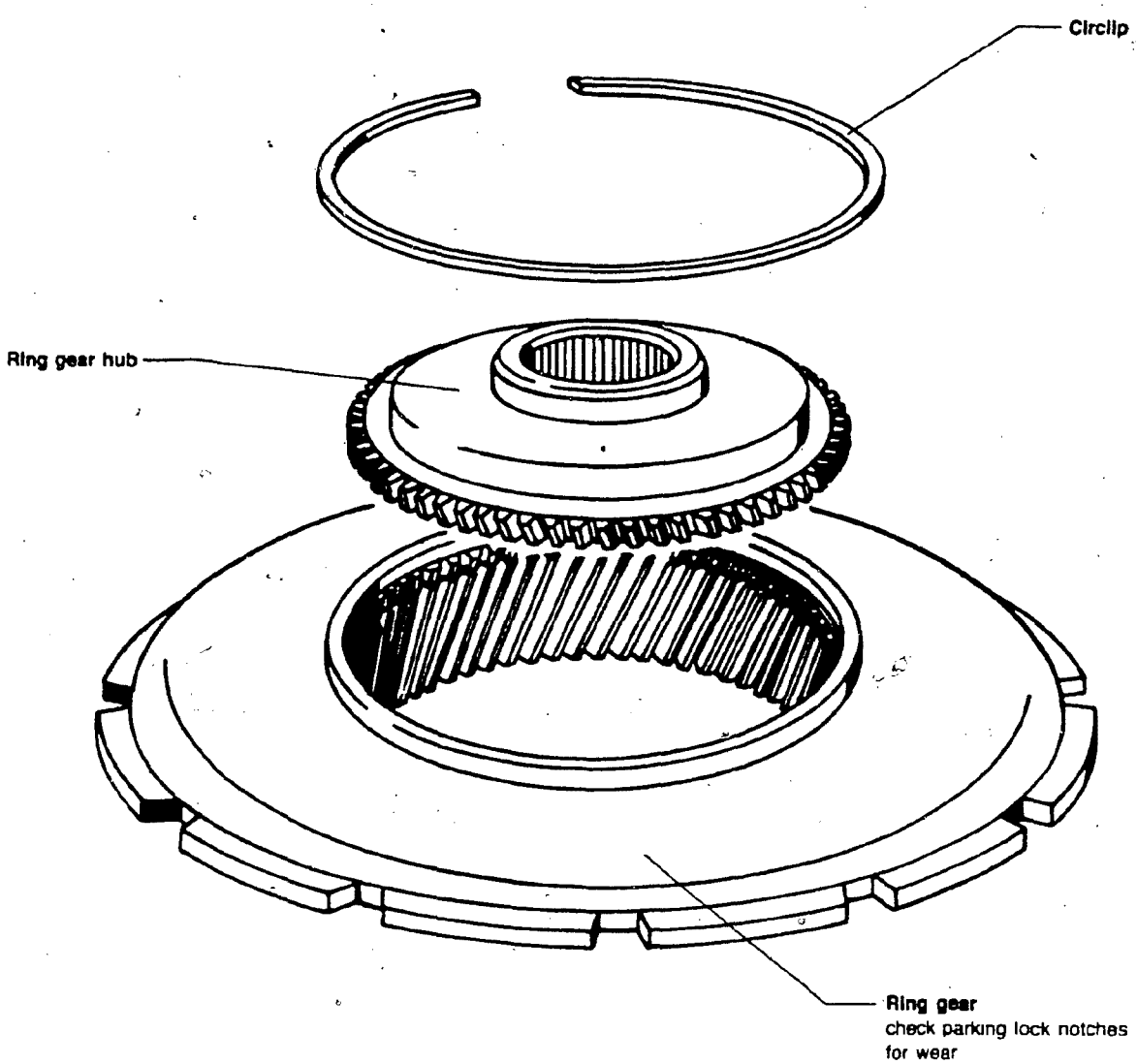

38-665

cardiagn.com

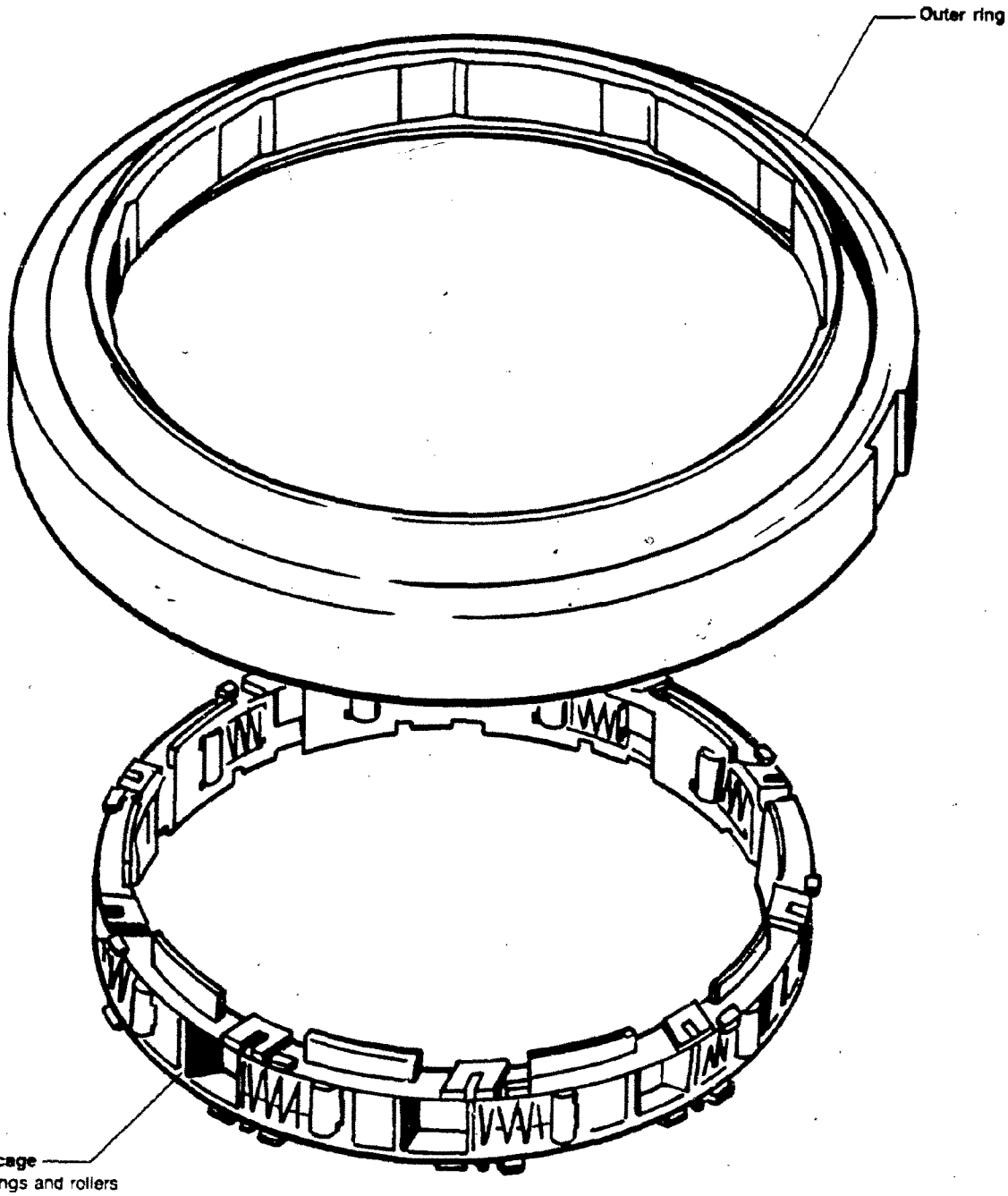

38-661

D-19

cardiagn.com

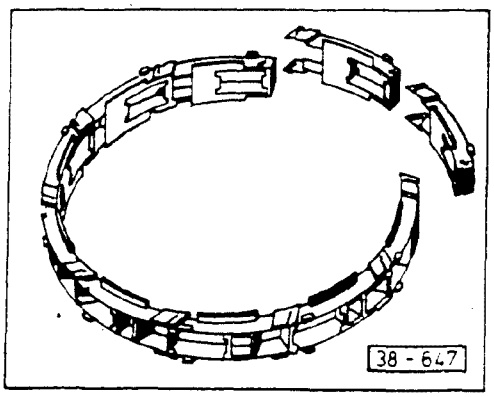

▶ **Fig. 1 Segments, assembling**

- assemble 10 segments together into a ring

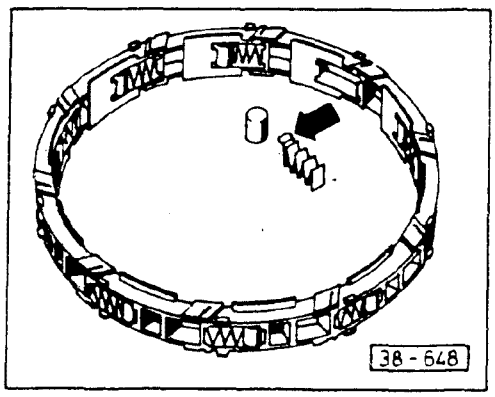

Fig. 2 Springs/rollers, installing

▶

- install spring tab (**arrow**) toward roller

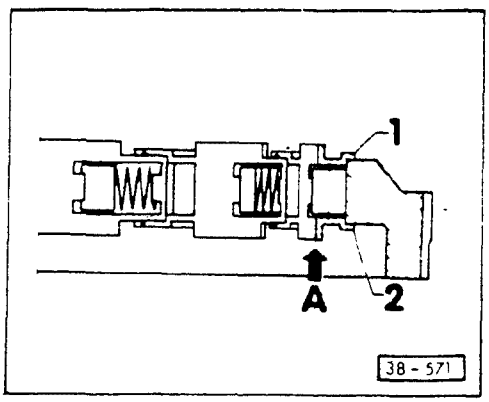

▶ **Fig. 3 Cage, installation position**

- insert cage into outer ring from below (direction of arrow **A**)
  - small ledge **1** to top
  - large ledge **2** to bottom

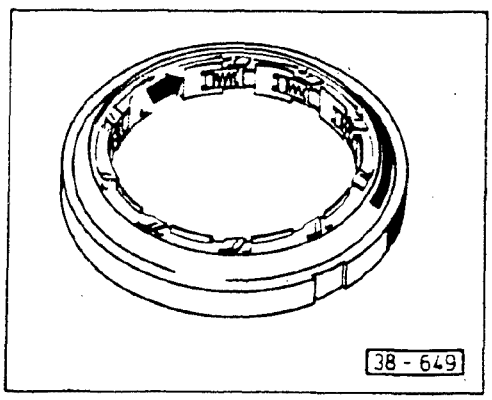

▶ **Fig. 4 Cage, securing**

- turn in direction of **arrow**

cardiagn.com

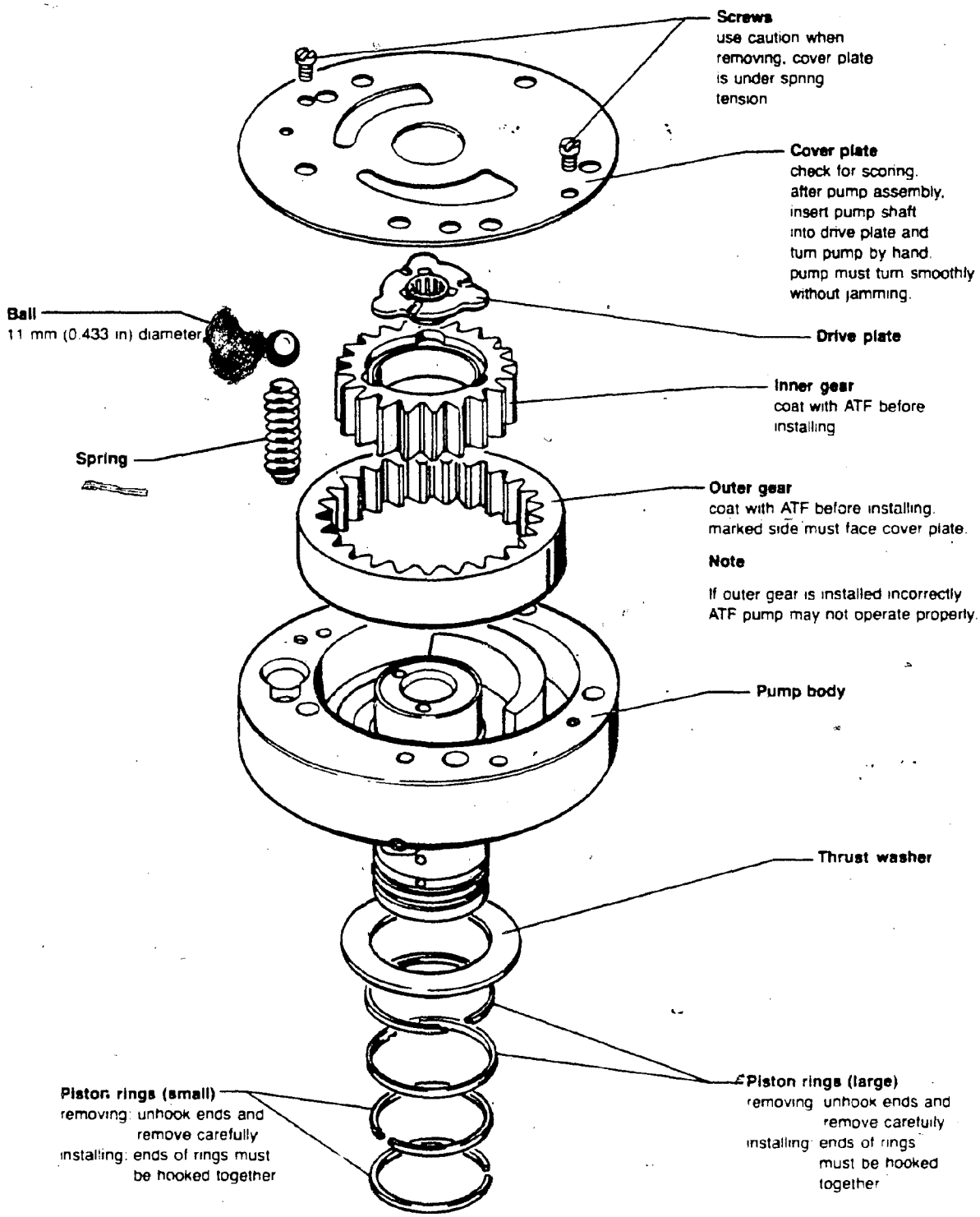

cardiagn.com

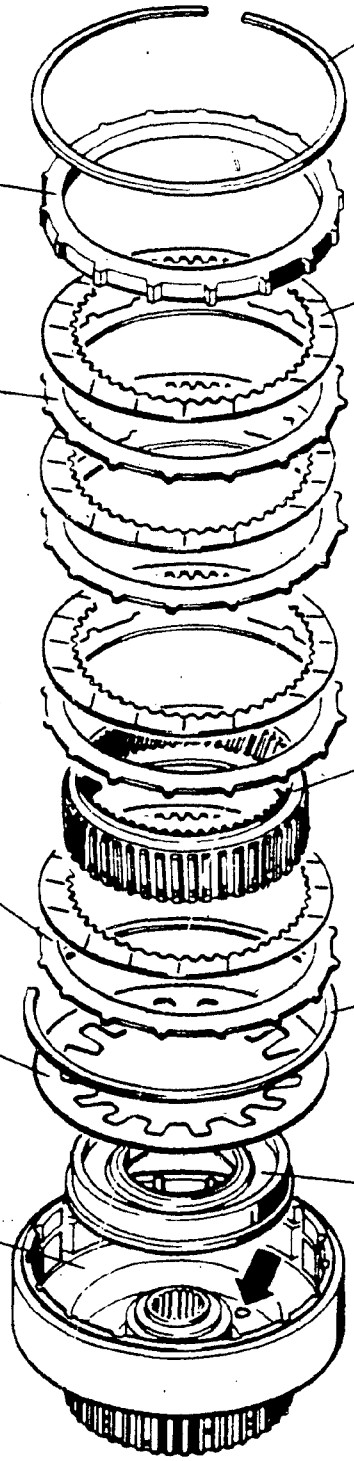

*Number of plates. see table of technical data Repair Group 37

cardiagn.com

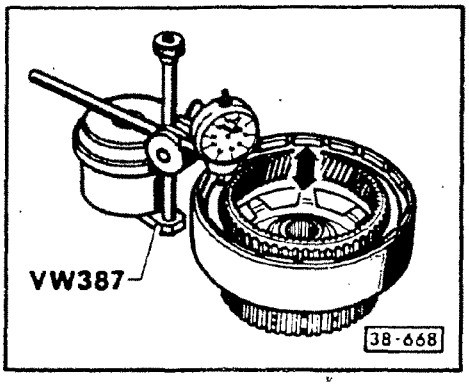

▶ **Fig. 1 Forward clutch end play, adjusting**

- check that end play (**arrow**) is between 0.5-0.9 mm (0.020-0.035 in.)

If NO,

- select new pressure plate using table

Thickness (mm)	Part no.
6.0	010 323 253 F
6.4	010 323 253 A
6.8	010 323 253 B
7.2	010 323 253 C
7.6	010 323 253 D

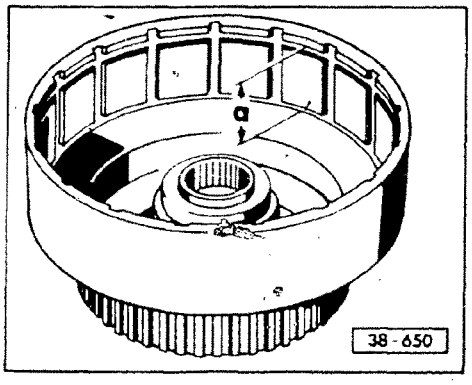

▶ **Fig. 2 Forward clutch drum, assembling**

- measure depth of groove for circlip
  - a = 29.8 mm (1.173 in.)

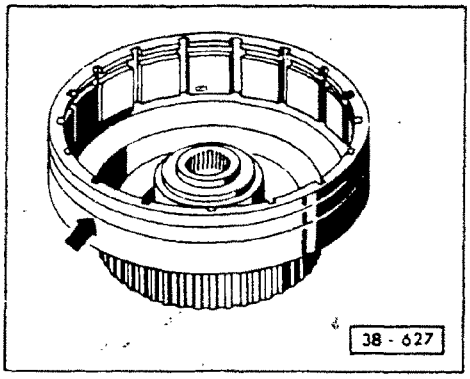

▶ **Fig. 3 Forward clutch drum, identification**

- 2 grooves (**arrow**)
- 2 groove clutch drum must be fitted with a 140 mm diameter direct/reverse clutch

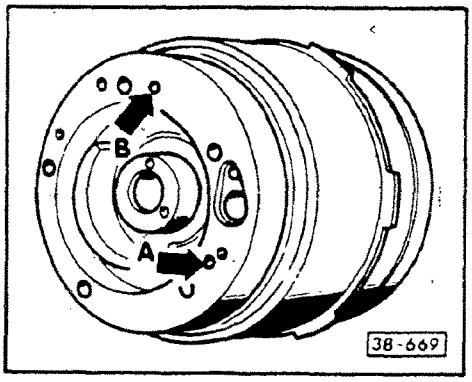

▶ **Fig. 4 Forward clutch assembly, checking**

- install forward clutch and direct/reverse clutch with needle bearing onto oil pump
- apply compressed air to port (**arrow A**)
  - piston must compress clutch plates
  - piston must return to original position when air pressure is released

cardiagn.com

CONTINUED IN THE

BEGINNING OF NEXT ROW

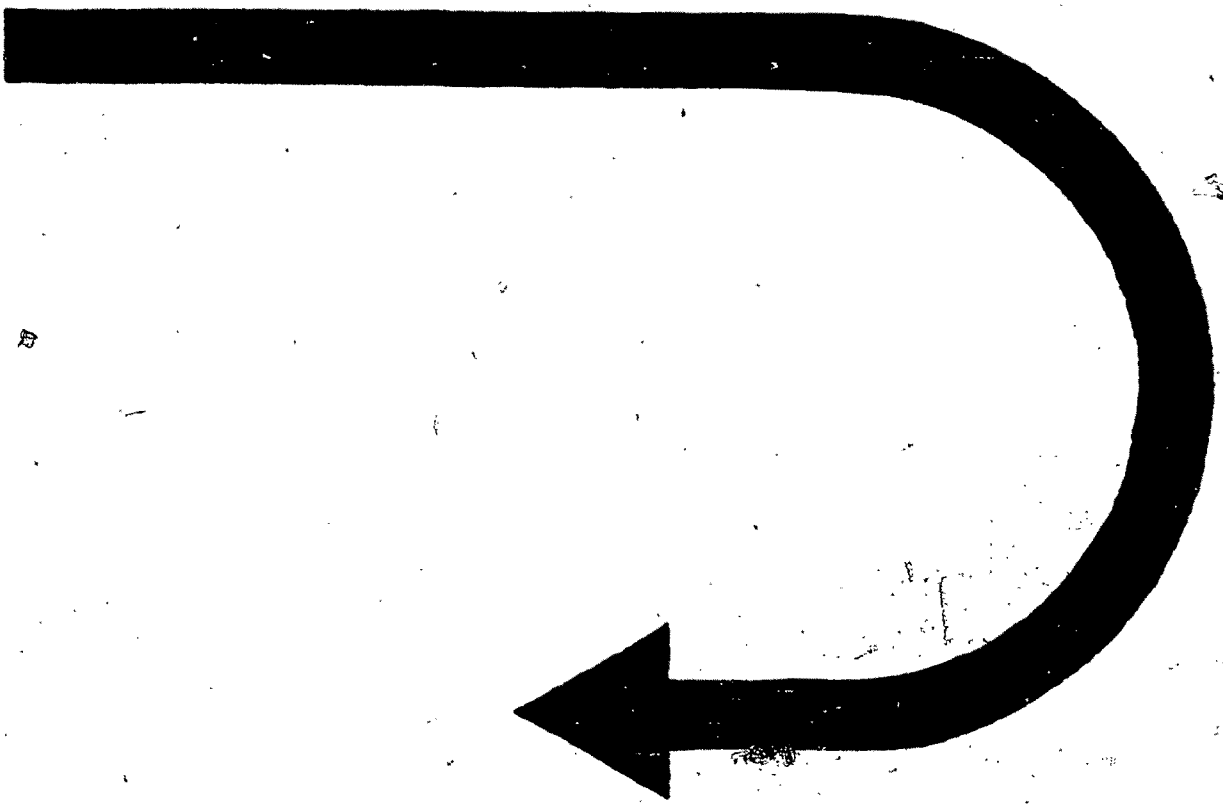

cardiagn.com

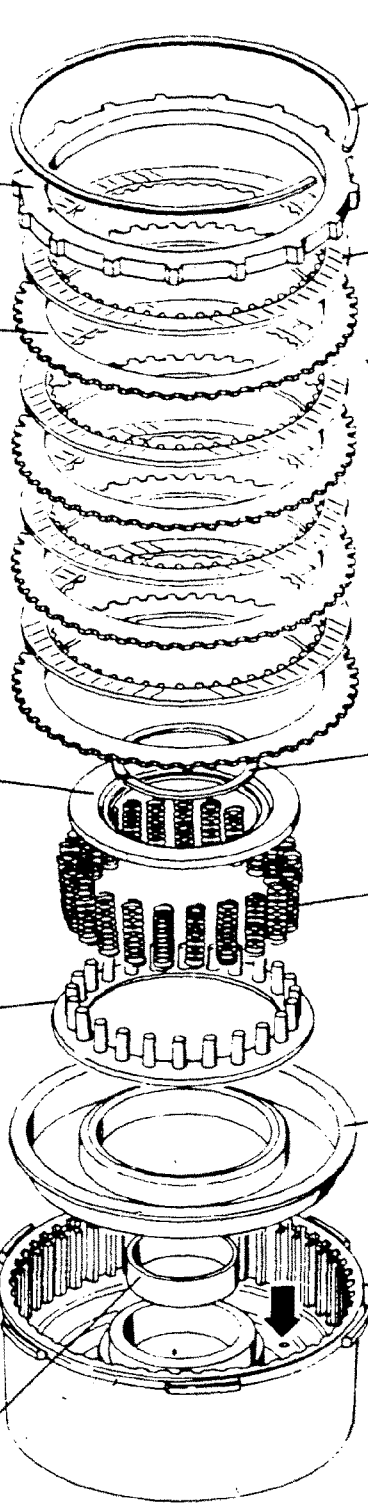

*Number of plates or springs, see table of technical data Repair Group 37

38-662

E-2

cardiagn.com

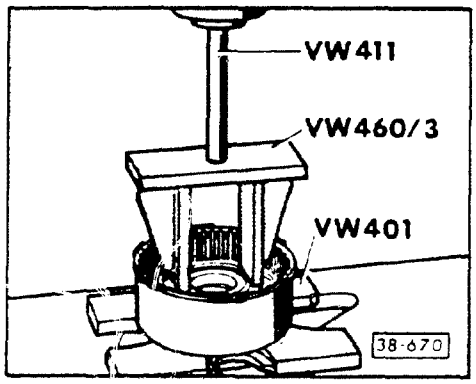

▶ **Fig. 1 Circlip (small); removing/installing**

- press down on spring plate

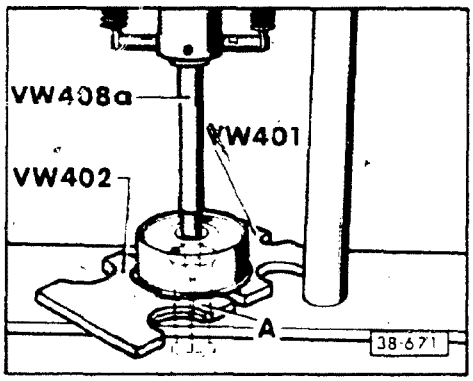

▶ **Fig. 2 Clutch drum bushing, removing**

- **A** = 37-46 mm puller **US 1099** or **Kukko 21/6**

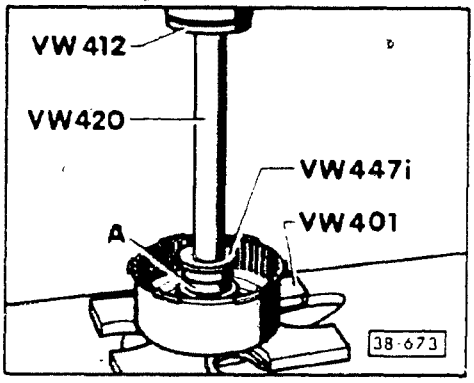

▶ **Fig. 3 Clutch drum bushing, installing**

- press bushing in flush with **VW 433**
- use old bushing **A** to press new bushing 1.7 mm (0.067 in.) below top edge

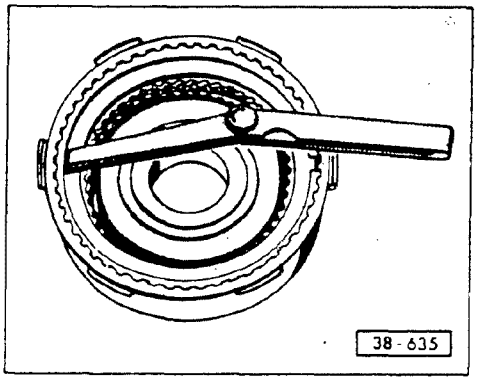

▶ **Fig. 4 Direct/reverse clutch end play, adjusting**

- check that end play is 2.05-2.50 mm (0.081-0.098 in.)
- adjust if necessary by replacing circlip until correct clearance is obtained

cardiagn.com

CAUTION

Part numbers are for reference only. Always check with your Parts Department for latest information.

For 134 mm diameter clutch drum

Thickness (mm)	Part no.
1.5	010 323 157 E
1.7	010 323 157 F
2.0	010 323 157 G
2.3	010 323 157 H
2.5	010 323 157 J

For 140 mm diameter drum

Thickness (mm)	Part no.
1.5	087 323 157
1.7	087 323 157 A
2.0	087 323 157 B
2.3	087 323 157 C
2.5	087 323 157 D

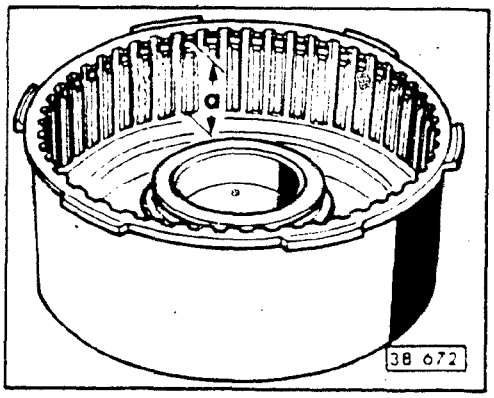

▶ **Fig. 5 Direct/reverse clutch drum, identification**

- measure depth of groove for circlip
  - **a** ≐ 31.25 mm (1.230 in.) for 4 inner 4 outer plates

Note

Only install a clutch drum with 51 outer plate grooves.

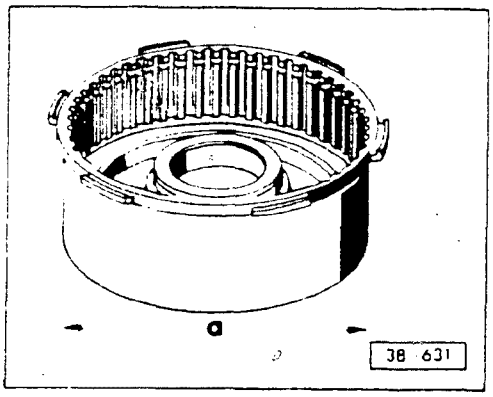

▶ **Fig. 6 Direct/reverse clutch drum, modification**

- dimension **a**
  clutch drum: 134 mm (5.37 in.) diameter
  wider clutch drum: 140 mm (5.51 in.) diameter

Note

On the wider clutch drum the friction surfaces of the inner and outer plates and the pressure plate have been increased by 6 mm.

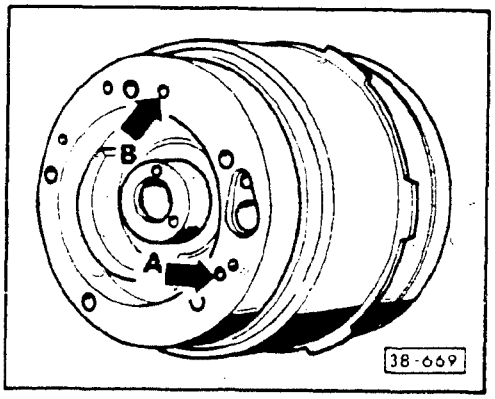

▶ **Fig. 7 Direct/reverse clutch assembly, checking**

- install forward clutch and direct/reverse clutch with needle bearing onto oil pump
- apply compressed air to port (arrow **B**)
  - piston must compress clutch plates
  - piston must return to original position when air pressure is released

cardiagn.com

This page intentionally left blank

cardiagn.com

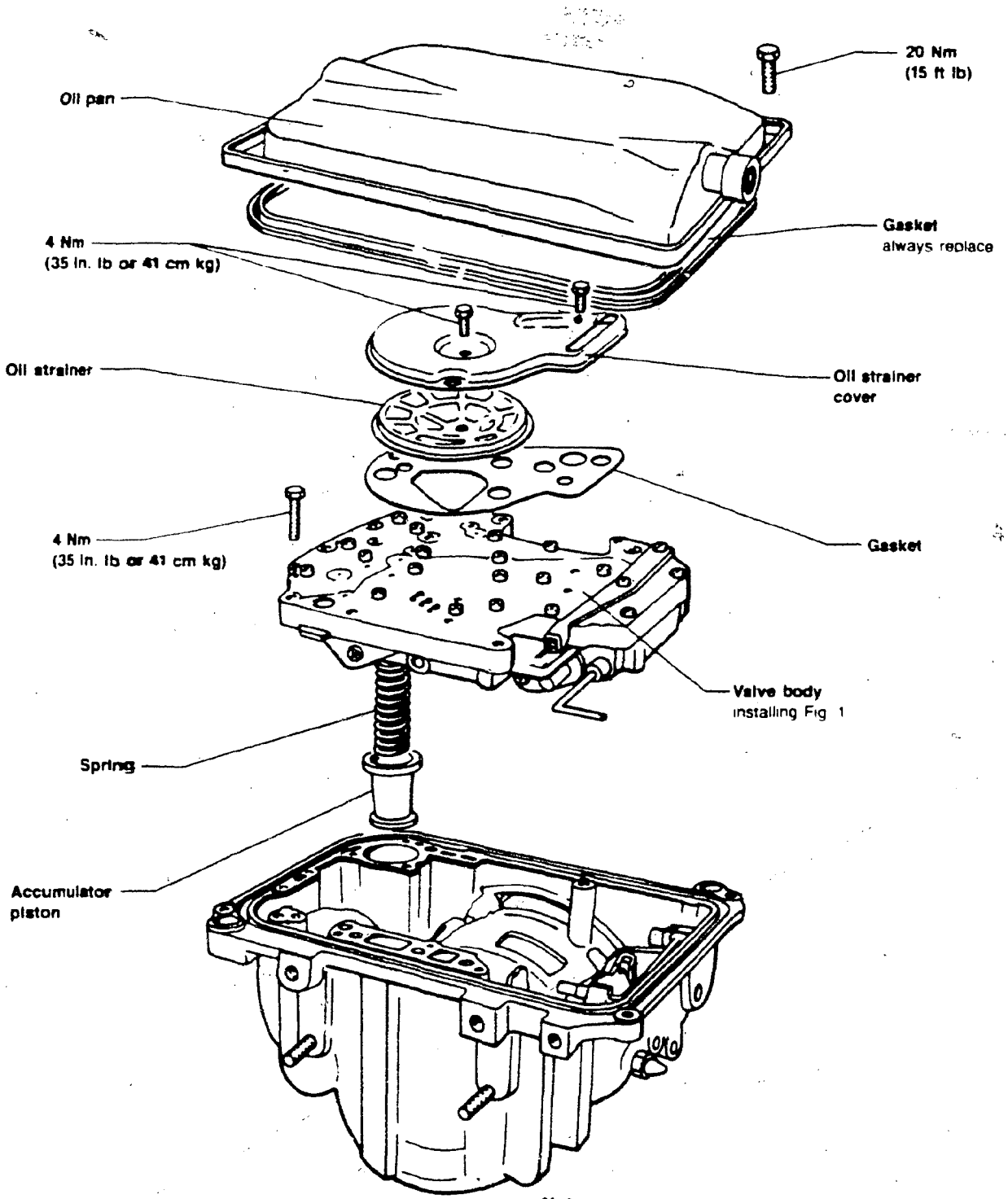

CAUTION

Do not run engine or tow vehicle when oil pan is off or with no oil in transmisison.

Note

The valve body can be removed and installed with the transmission in the vehicle.

38-667

E-6

cardiagn.com

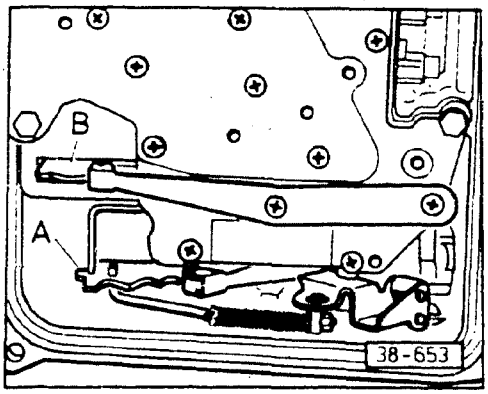

▶ **Fig. 1 Valve body, installing**

- fit valve body to transmission case
- connect manual valve **A** and kickdown valve **B**
- tighten all bolts diagonally to 4 Nm (35 in. lb or 41 cm kg)

cardiagn.com

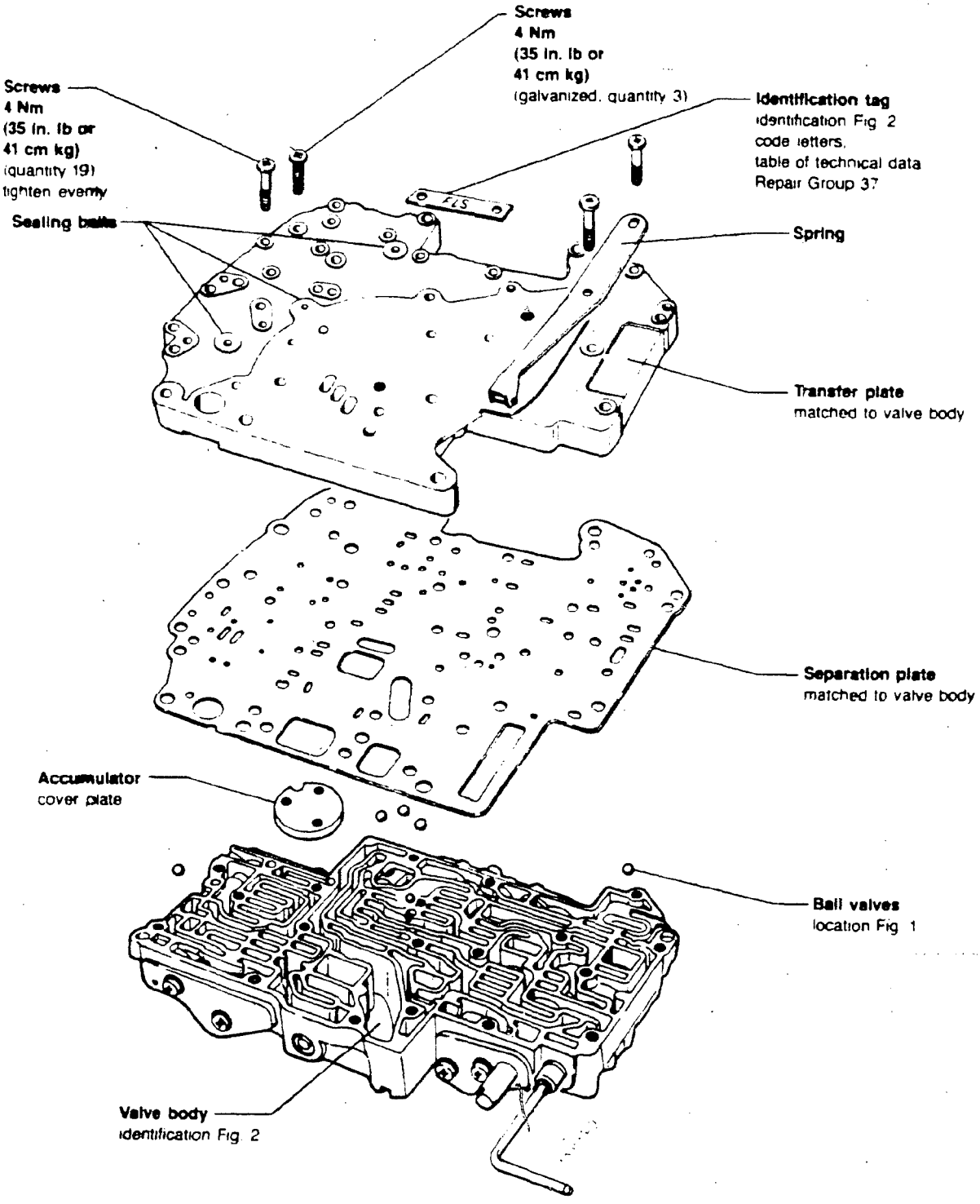

cardiagn.com

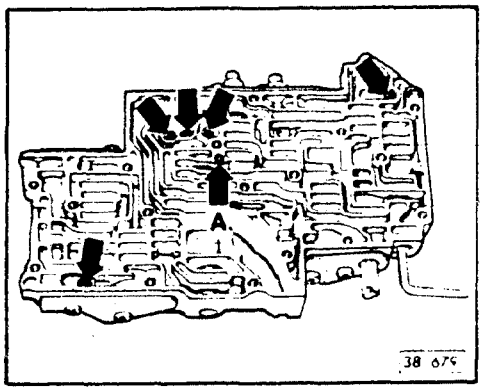

Fig. 1 Ball valves, location

- (arrow **A**) 1 ball 3 mm diameter
- (**arrows**) 5 balls 6 mm diameter

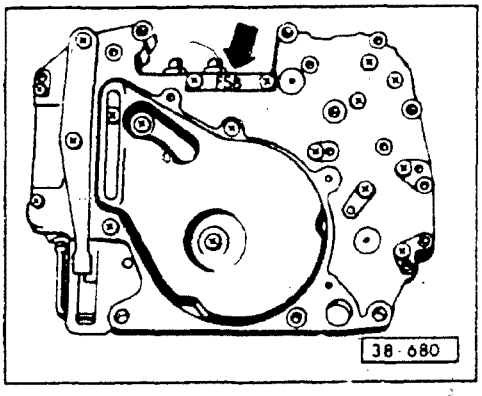

Fig. 2 Valve body, identification

- code letters (**arrow**)
- see table of technical data Repair Group 37

cardiagn.com

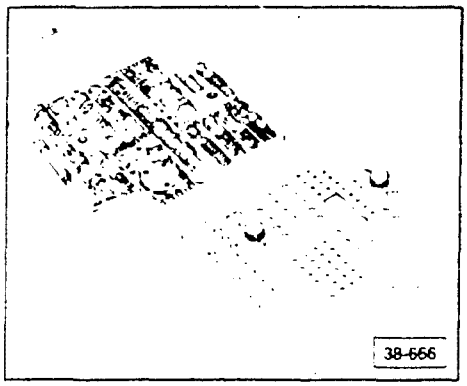

Valve body, disassembling/cleaning

Valve body should be disassembled for cleaning only when transmission failure was caused by burnt friction linings or excessively dirty ATF. If ATF is still fairly clean, place the complete valve body in cleaning solution and then dry it afterwards with compressed air.

Storage tray, tool number **2008/A**, is used to store all valves, springs and screws from valve body.

Tray outer shape corresponds to shape of valve body.

To be sure parts are reinstalled in their original location, they should be placed in storage tray.

Ball valves can be stored in space provided for bolts

- remove rear end plate, take out valves and springs one after another and place them in tray
- remove end plate from other side and repeat procedure
- place lid on tray
- immerse tray complete with parts in cleaning solution. Dry with compressed air. Do not use water, fluffy rags or cloths when cleaning parts

Valve body, assembling

Lubricate all parts with ATF when assembling and check for free movement. Valves should slide under their own weight.

Valves which are slightly scored may be reused. This will not affect operation of transmission.

All parts must be completely clean.

Valves and springs must be put back into same holes from which they were removed

- insert springs and valves into one side in locations shown in exploded view and then install end plate before proceeding with other side

cardiagn.com

This page intentionally left blank

cardiagn.com

CAUTION

Several valve springs have the same dimensions. However do not interchange because they have different tolerances.

- storage tray for valve cleaning page 38 30

Spring measurements
see spring table page 38 32

Note

Circled numbers correspond to those in spring table

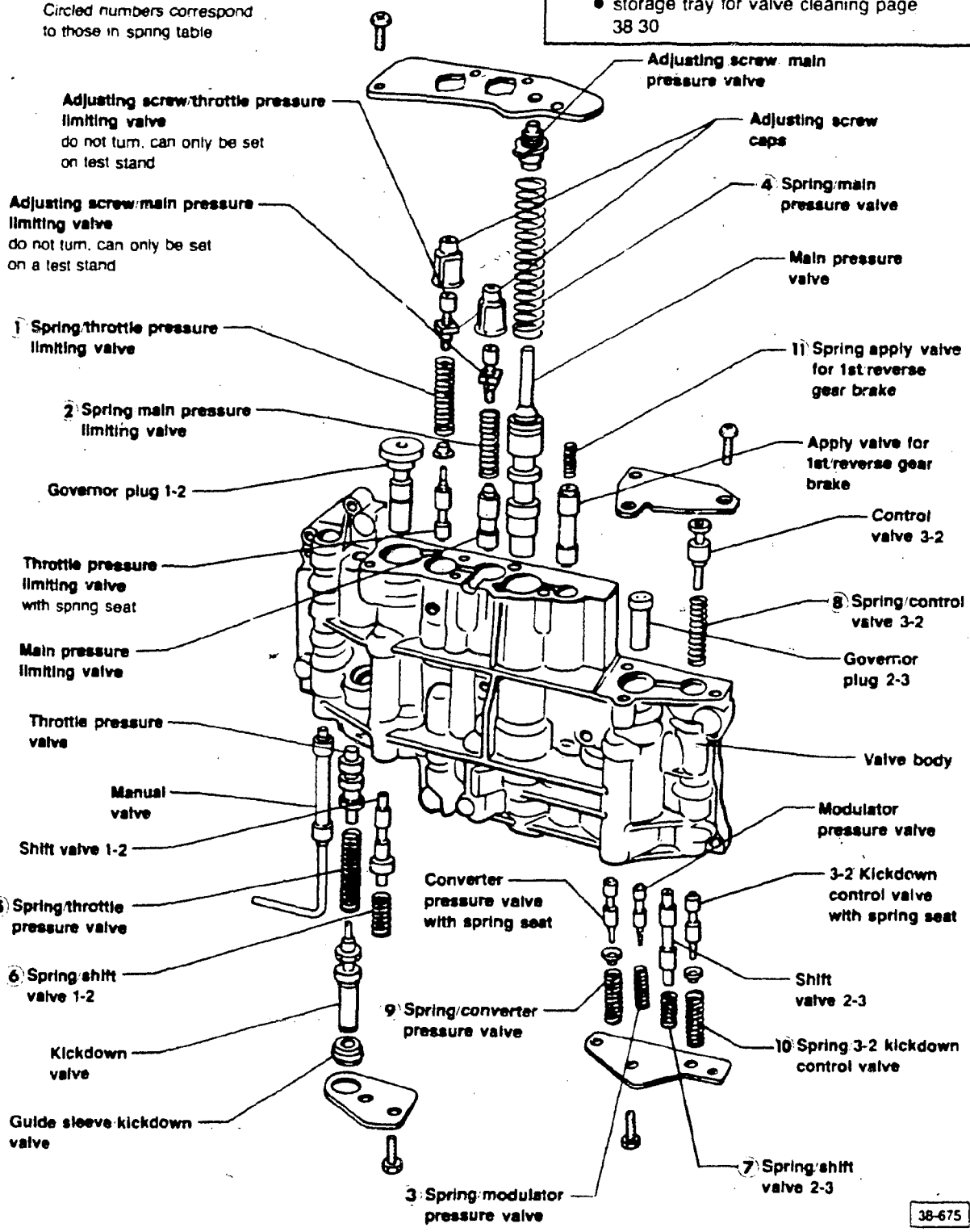

cardiagn.com

Spring table

This table allows identification of springs by their dimensions. Coil diameter and free length can vary between new and used springs (due to settling) so when identifying springs check the spring wire thickness and the number of coils first. Then if necessary check the spring inner diameter and free length.

CAUTION

Valve springs of similar dimensions must not be interchanged due to different tolerances.

Description	Coils	Wire thickness mm (in.)	Free length[1] mm (in.)	Spring inner diameter[2] mm (in.)
① Spring/throttle pressure limiting valve	14.5	1.1 (0.043)	37.9 (1.492)	7.7 (0.303)
② Spring/main pressure limiting valve	12.5	1.2 (0.047)	27.5 (1.083)	7.6 (0.299)
③ Spring/modulator pressure valve	11.5	0.8 (0.031)	28.6 (1.126)	7.75 (0.305)
④ Spring/main pressure valve	16.5	1.4 (0.055)	69.2 (2.724)	11.9 (0.469)
⑤ Spring/throttle pressure valve	16.5	1.1 (0.043)	44.0 (1.732)	7.75 (0.305)
⑥ Spring/shift valve 1-2	8.5	0.9 (0.035)	28.8 (1.134)	8.1 (0.319)
⑦ Spring/shift valve 2-3	8.5	0.8 (0.031)	17.4 (0.685)	6.95 (0.274)
⑧ Spring control valve 3-2	12.5	1.0 (0.039)	32.4 (1.276)	7.7 (0.303)
⑨ Spring/converter pressure valve	8.5	1.25 (0.049)	22.2 (0.874)	7.7 (0.303)
⑩ Spring/3-2 Kickdown control valve	11.5	0.9 (0.035)	28.4 (1.118)	8.1 (0.319)
⑪ Spring/apply valve for 1st reverse gear brake	8.5	0.5 (0.020)	26.6 (1.047)	6.5 (0.256)

[1]Free length can vary due to tolerances and settling
[2]Inner coil diameter tolerance is ± 0.3 mm (0.012 in.)

cardiagn.com

Note

Lubricate all sealing rings with ATF before installing.

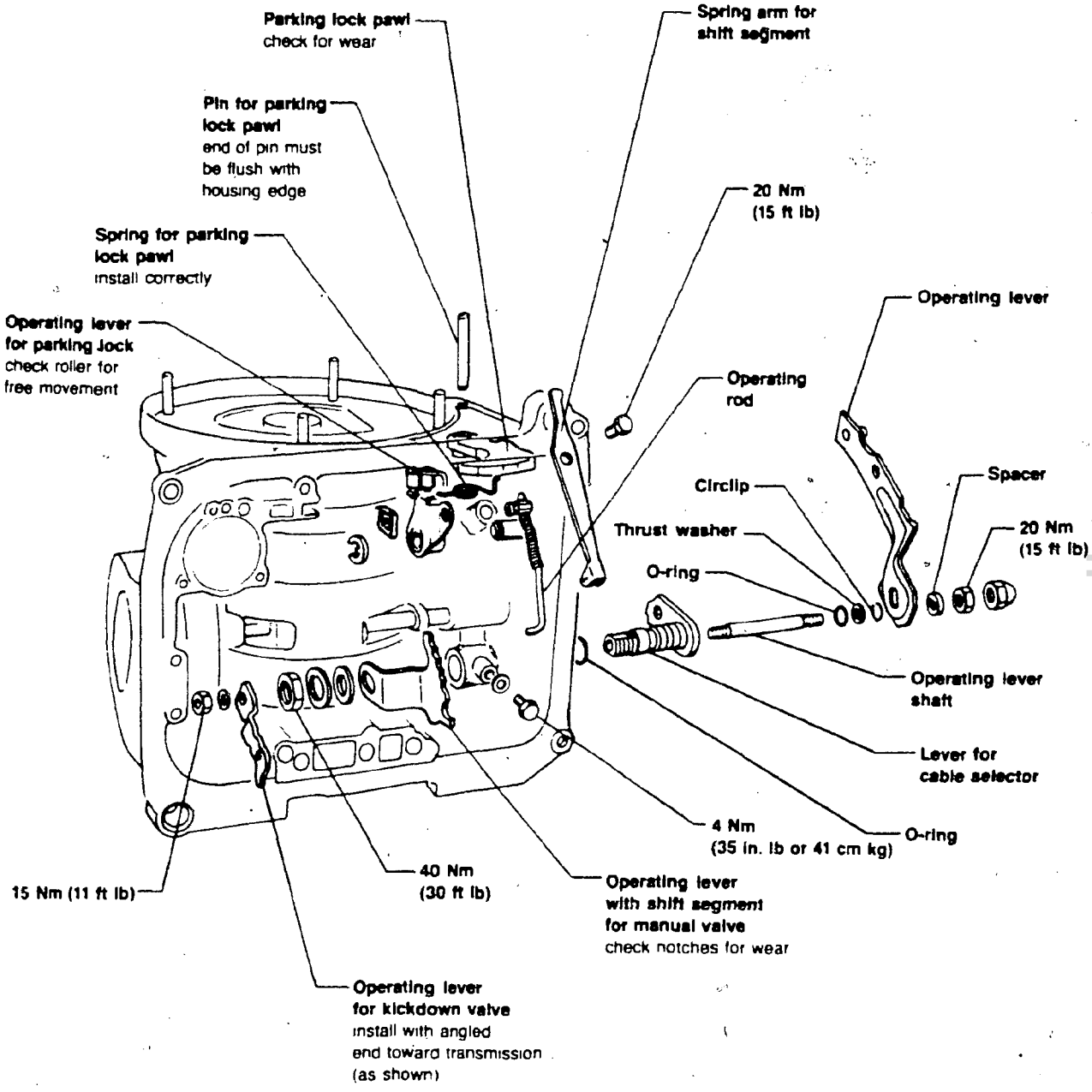

38-676

E-14

cardiagn.com

CONTINUED IN THE

BEGINNING OF NEXT ROW

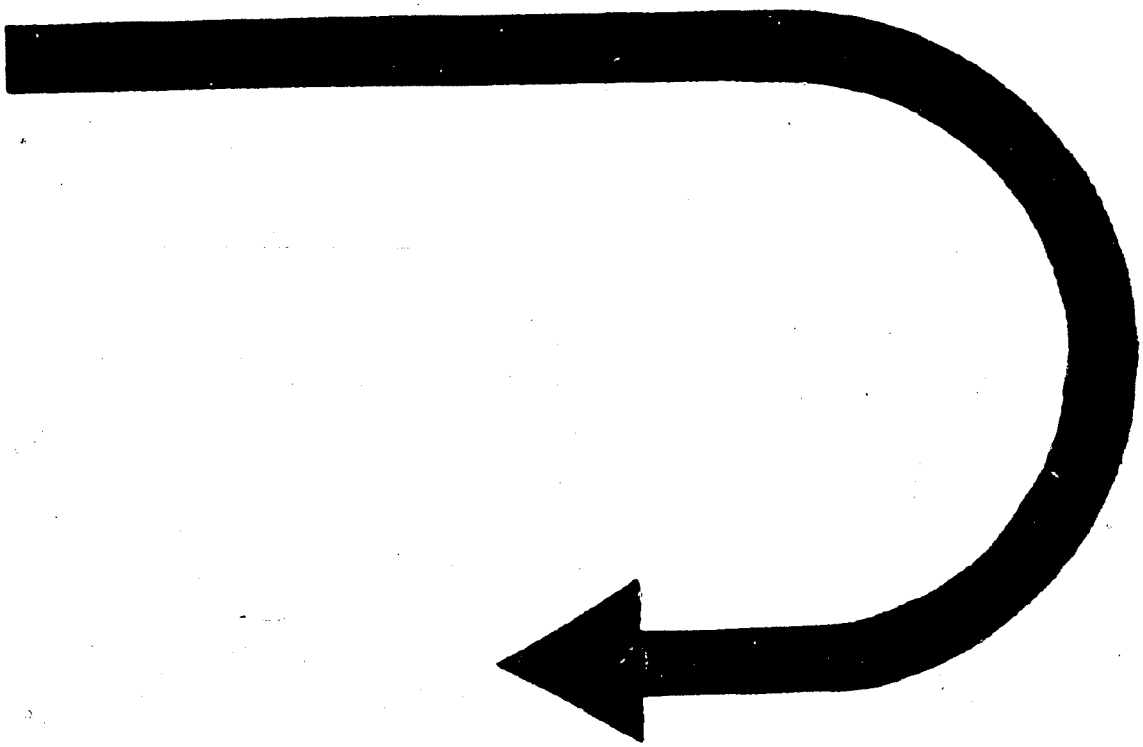

cardiagn.com

Index

Automatic 089

Adjusting ring
- assembly 39.3a
- removing/installing 39.5

Ball valve
- checking 39.9

Component exchange
- chart 39.22

Cover plates
- removing/installing 39.7

Differential bearings
- inner race 39.13
- outer race 39.5

Drive flange
- identification 39.11
- oil seals 39.2, 39.6

Final drive
- disassembling/assembling 39.3
- mounting housing 39.4

Governor needle bearing oil seal
- removing/installing 39.4

Pinion
- bearing inner race 39.10
- bearing outer race 39.6, 39.8
- oil seals 39.6
- removing 39.9

Ring gear
- assembly 39.12
- identification 39.14

Ring gear/pinion
- adjusting 39.14

Speedometer drive gear
- replacing 39.11

Starter bushing
- installing 39.4

Torque converter oil seal
- removing/installing 39.9

Transmission/final drive oil seals
- removing/installing 39.23

Automatic Trans. 087

Axle flange oil seal
- removing/installing 39.24

Transmission/final drive oil seal
- removing/installing 39.25

cardiagn.com

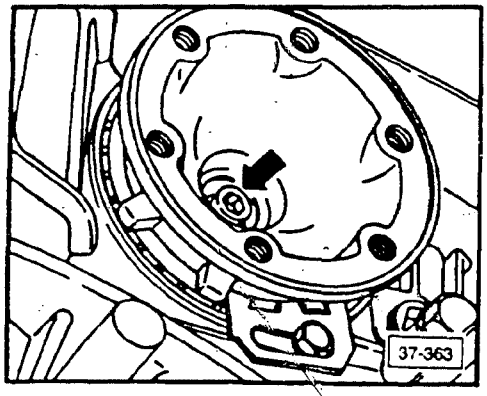

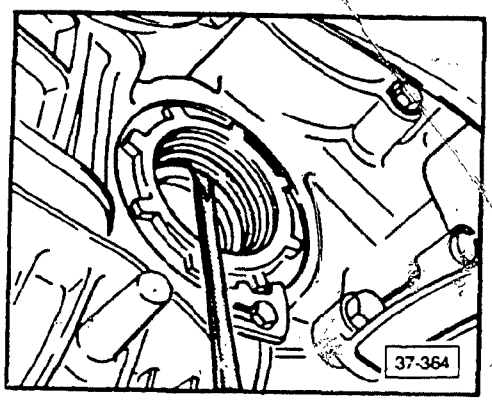

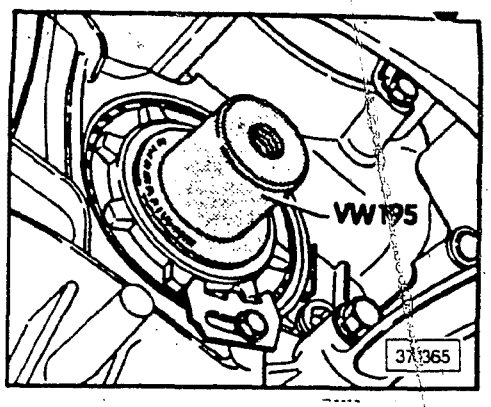

Drive flange oil seal, removing (Transmission in vehicle)

Note

Remove splash shield to replace right hand oil seal.

- remove axle shaft from drive flange
- remove drive flange bolt (**arrow**), hold flange with a drift
- place drip tray in position
- remove drive flange
- remove oil seal

Drive flange oil seal, installing

- drive oil seal into stop
- lubricate sealing lips with multi-purpose grease
- install drive flange, tighten flange bolt to 25 Nm (18 ft lb)
- install axle shaft to drive flange, tighten bolts to 45 Nm (32 ft lb)

cardiagn.com

Final drive, disassembling/assembling

CAUTION

If ring gear pinion and bearings will be reused, first measure backlash (page 39.21) and total pinion turning torque (page 39.19) **before disassembling** final drive. Use these measurements for adjustments during reassembly.

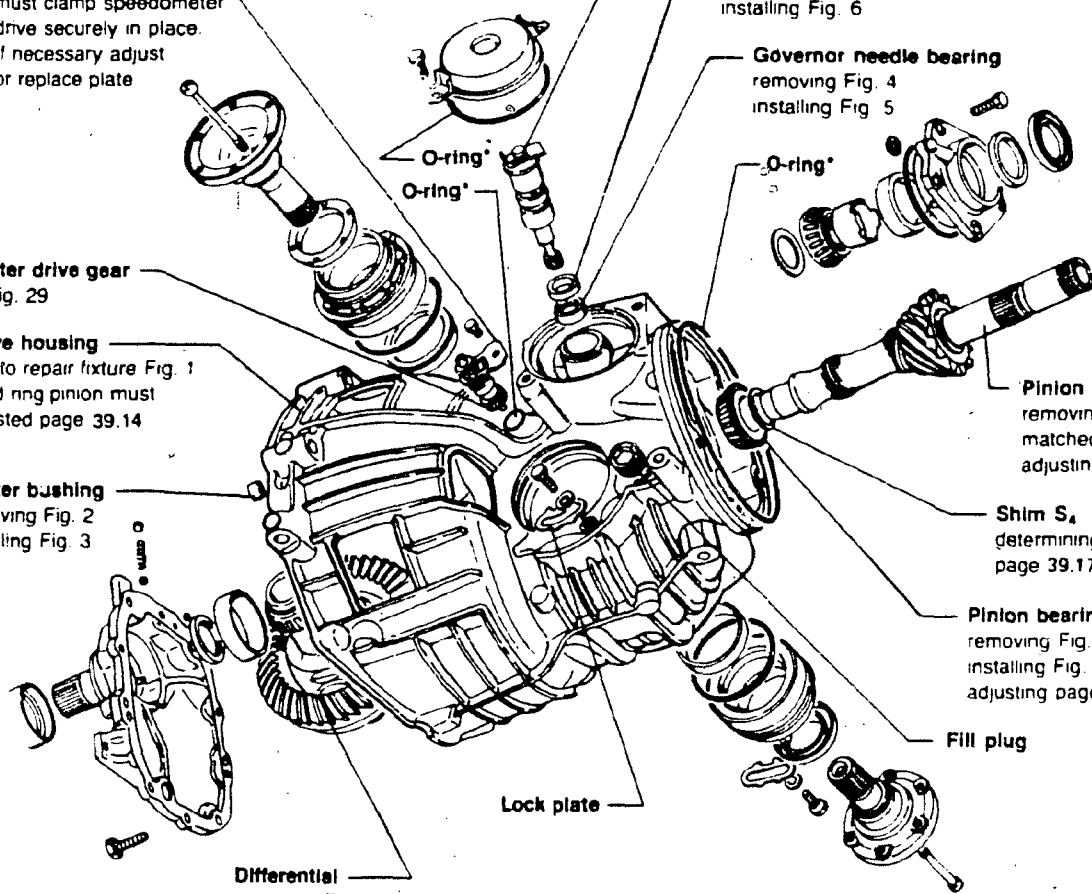

CAUTION

If ring pinion, bearing or bearing cover are replaced, the ring and pinion gears must be readjusted.

*always replace O-rings when removed

39-1198

G-3

cardiagn.com

Final drive, disassembling/assembling

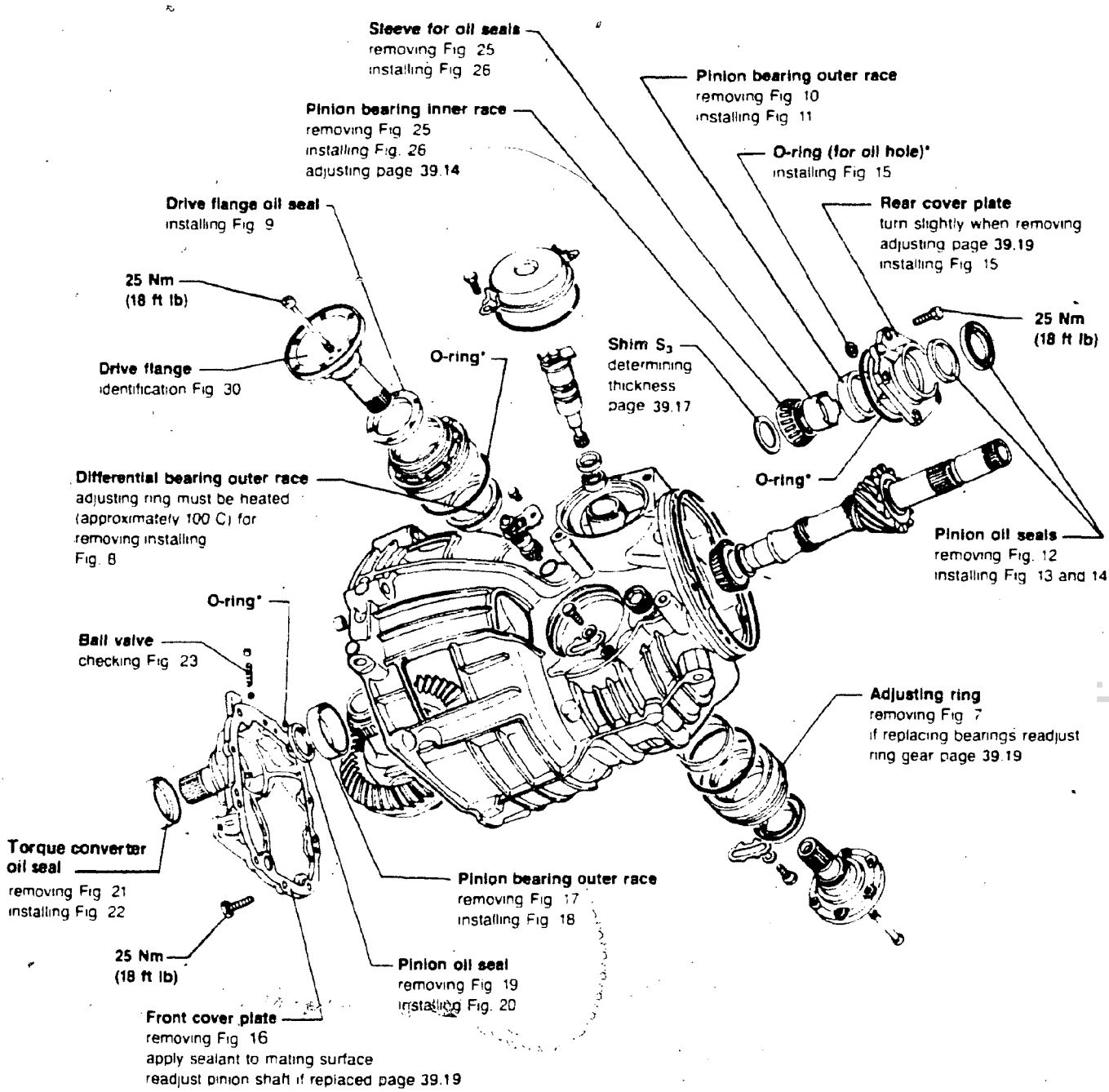

CAUTION

If ring gear pinion and bearings will be reused, first measure backlash (page 39.21) and total pinion turning torque (page 39.19) **before disassembling** final drive. Use these measurements for adjustments during reassembly.

CAUTION

If ring pinion, bearing or bearing cover are replaced, the ring and pinion gears must be readjusted.

*always replace O-rings when removed

39-1198

G-4

cardiagn.com

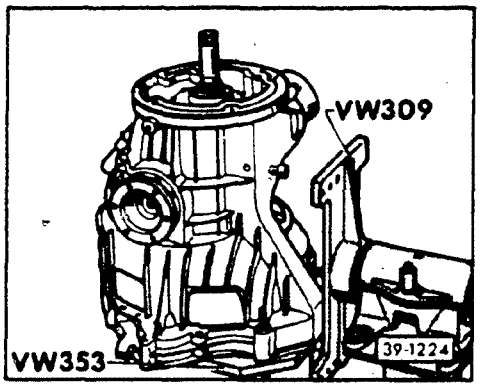

▶ **Fig. 1 Final drive housing, mounting**

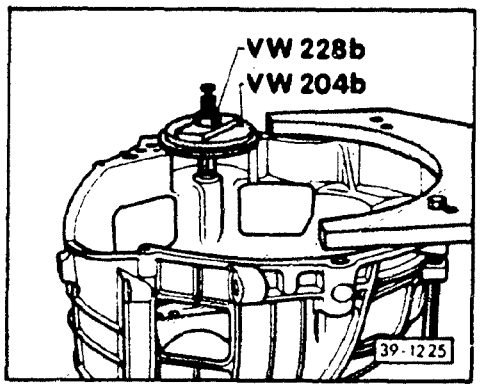

▶ **Fig. 2 Starter bushing, removing**

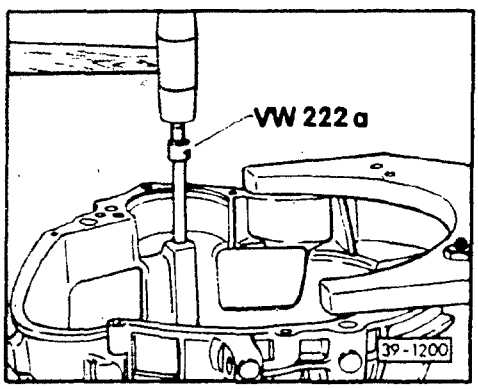

▶ **Fig. 3 Starter bushing, installing**

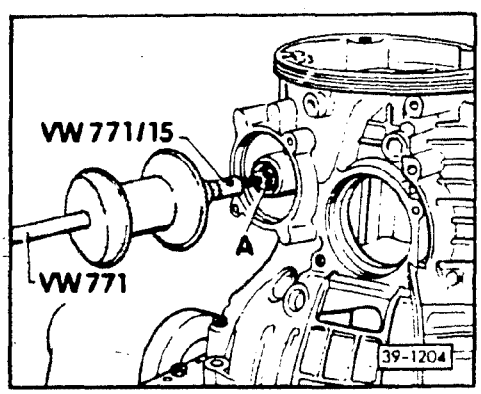

▶ **Fig. 4 Governor needle bearing/oil seal, removing**

- remove needle bearing together with oil seal
  - **A** = Kukko puller 21 3 (18.5-23.5mm)

cardiagn.com

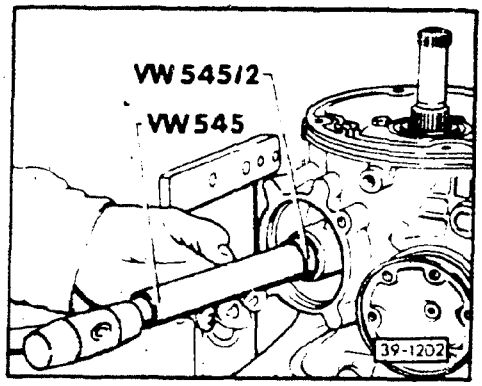

▶ **Fig. 5 Governor needle bearing, installing**

- drive in until seated

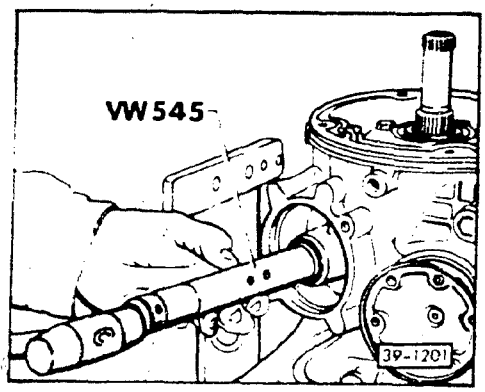

▶ **Fig. 6 Governor oil seal, installing**

- sealing lip faces governor
- drive in until seated

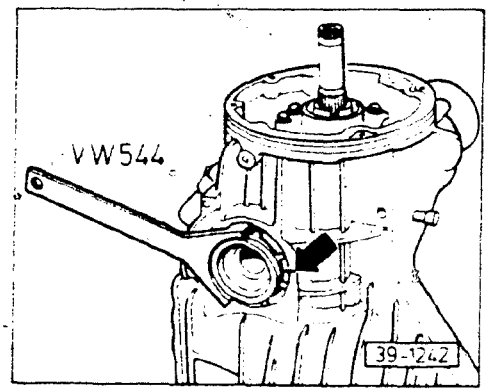

▶ **Fig. 7 Adjusting ring, removing/installing**

- mark position of adjusting ring **before** removing

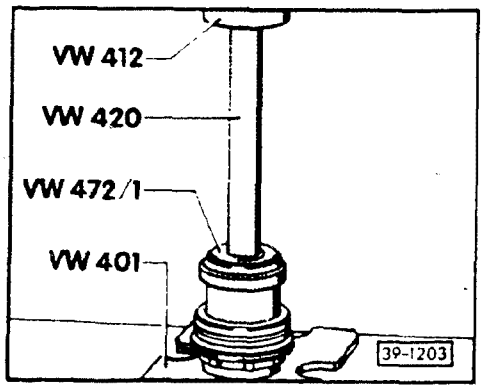

▶ **Fig. 8 *Differential bearing outer race, installing***

- heat adjusting ring to approximately 100°C (212°F)
- press race in until seated

CAUTION

Do not remove or install bearing race without heating the adjusting ring. Cold removal will damage the adjusting ring.

G-6

cardiagn.com

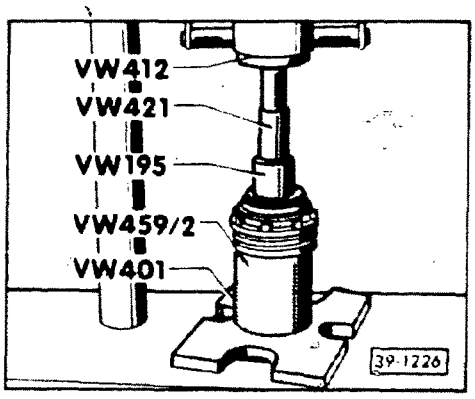

▶ **Fig. 9 Drive flange oil seal, installing**

- coat seal lips with multi purpose grease and press in

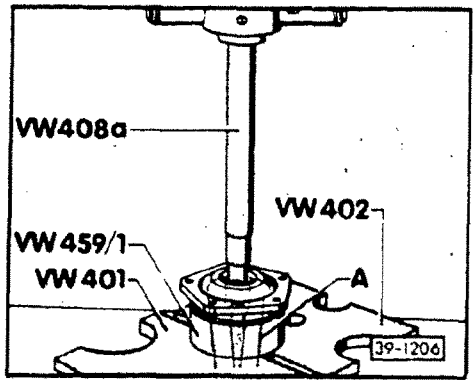

▶ **Fig. 10 Pinion bearing outer race, removing**

- **A** = Kukko 21/7 (46/56 mm)

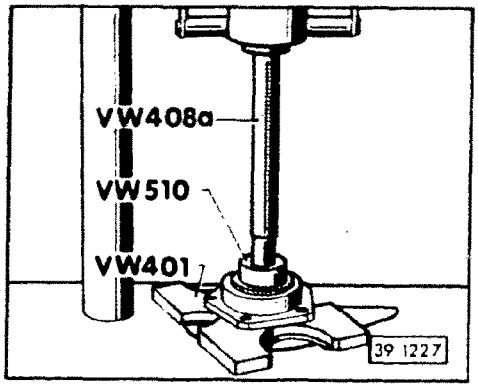

▶ **Fig. 11 Pinion bearing outer race, installing**

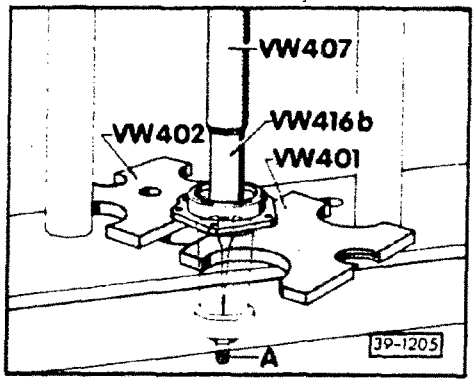

▶ **Fig. 12 Pinion oil seals, removing**

- **A** = Kukko 21/6 (37-46 mm)
- press both seals out together

cardiagn.com

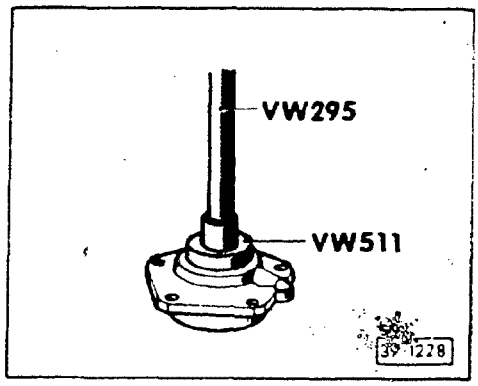

▶ **Fig. 13 Pinion oil seal, installing**

- open side of seal faces final drive

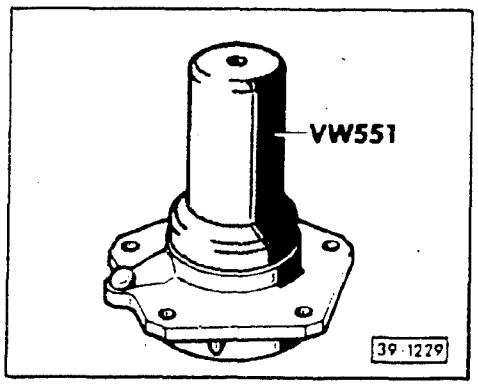

▶ **Fig. 14 Pinion oil seal, installing**

- open side of seal faces transmission
- drive seal in until flush

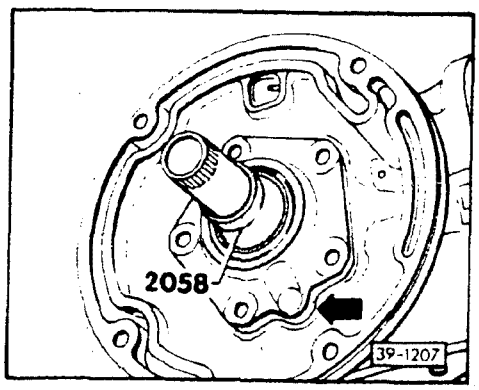

▶ **Fig. 15 Rear cover plate, installing**

- place sleeve on pinion to protect seal
- install oil hole O-ring (**arrow**)

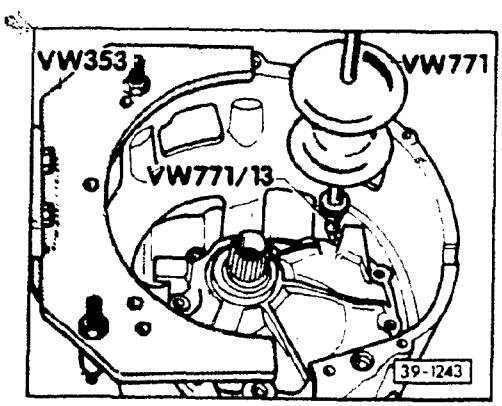

▶ **Fig. 16 Front cover plate, removing**

cardiagn.com

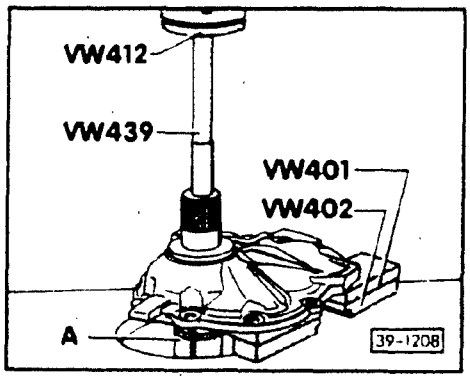

▶ **Fig. 17 Pinion bearing outer race, removing**

- **A** = Kukko 21/7 (46-56 mm)

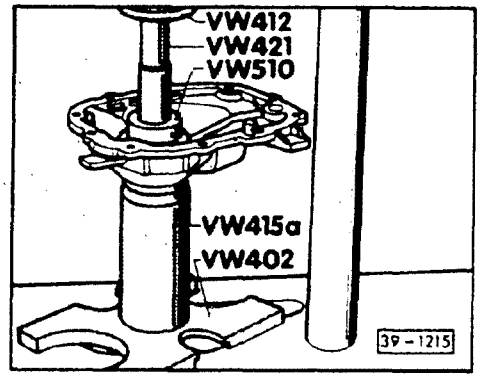

▶ **Fig. 18 Pinion bearing outer race, installing**

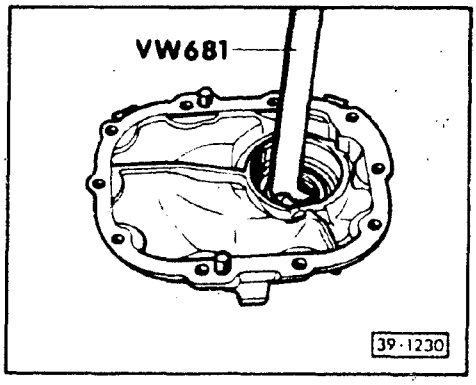

▶ **Fig. 19 Pinion oil seal, removing**

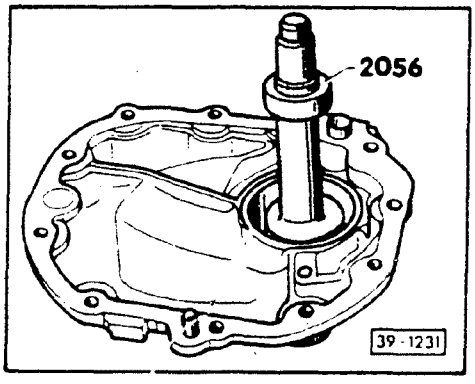

▶ **Fig. 20 Pinion oil seal, installing**

- drive in to stop

cardiagn.com

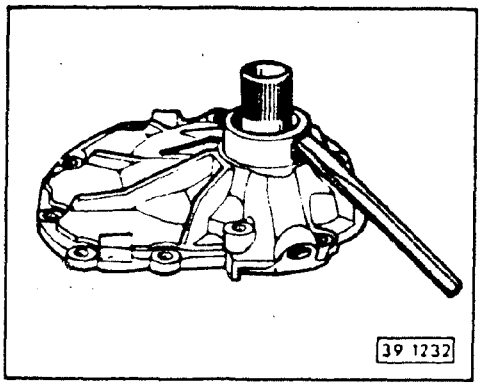

▶ **Fig. 21 Torque converter oil seal, removing**

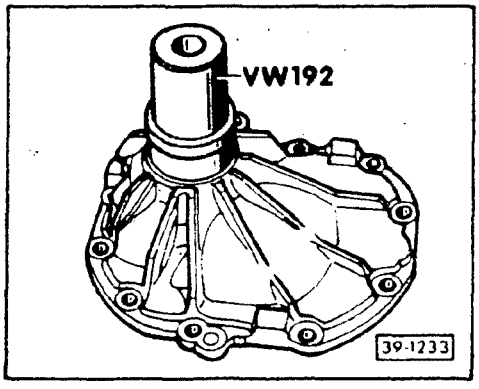

▶ **Fig. 22 Torque converter oil seal, installing**

> **CAUTION**
>
> Be careful when installing seal, it is easily damaged. Silicone seals must not contact gasoline or similar cleaning solutions.

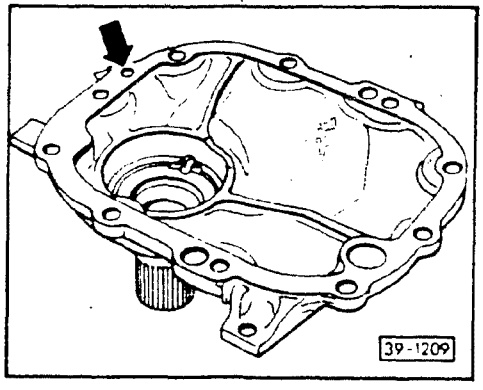

▶ **Fig. 23 Ball valve, checking**

- check that hole is clear
- check ball valve operation by sucking at hole (**arrow**) with a hose

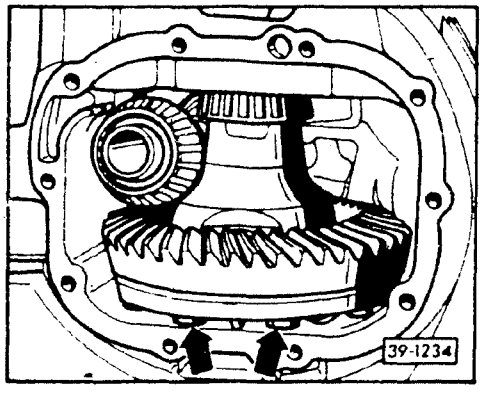

▶ **Fig. 24 Pinion, removing**

- turn differential so that two ring gear bolts (**arrows**) are parallel to housing surface

cardiagn.com

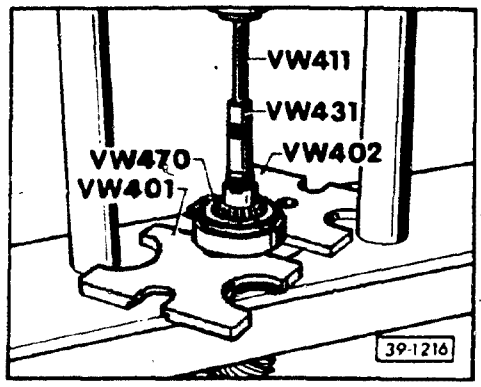

▶ **Fig. 25 Sleeve for oil seals and bearing inner race, removing**

- press off together

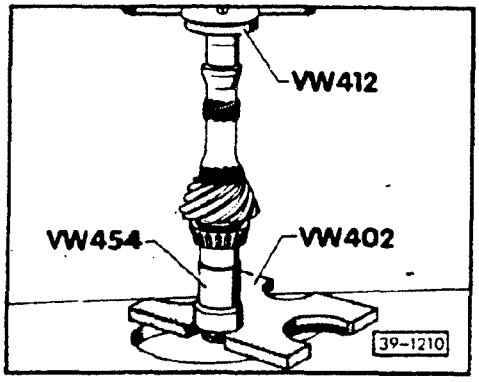

▶ **Fig. 26 Pinion bearing inner race and sleeve for oil seals, installing**

- heat to approximately 100°C (212°F) and press on

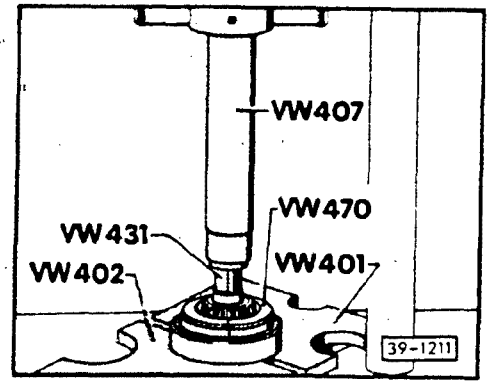

▶ **Fig. 27 Pinion bearing inner race, removing**

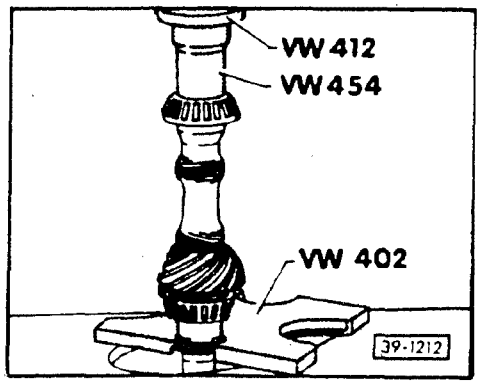

▶ **Fig. 28 Pinion bearing inner race, installing**

- heat bearing to approximately 100°C (212°F)

cardiagn.com

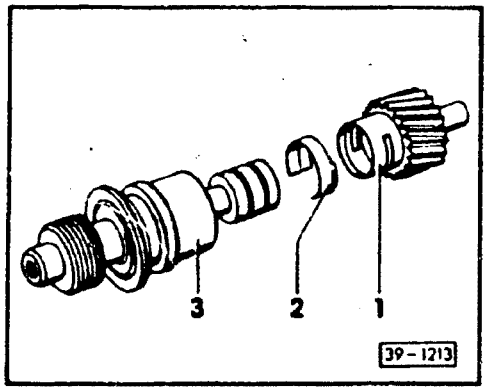

▶ **Fig. 29 Speedometer drive gear, replacing**

- remove clip (**2**) with 2 screwdrivers and remove gear (**1**) from pinion seat (**3**)

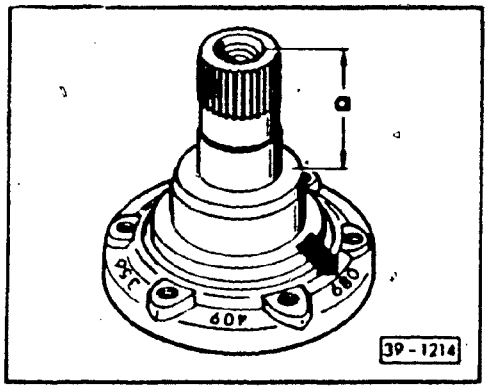

▶ **Fig. 30 Drive flange, identification (arrow)**

- **a** = 49.05 mm (1-15 16 in) right flange
  73.5 mm (2-7 8 in) left flange

cardiagn.com

This page intentionally left blank

cardiagn.com

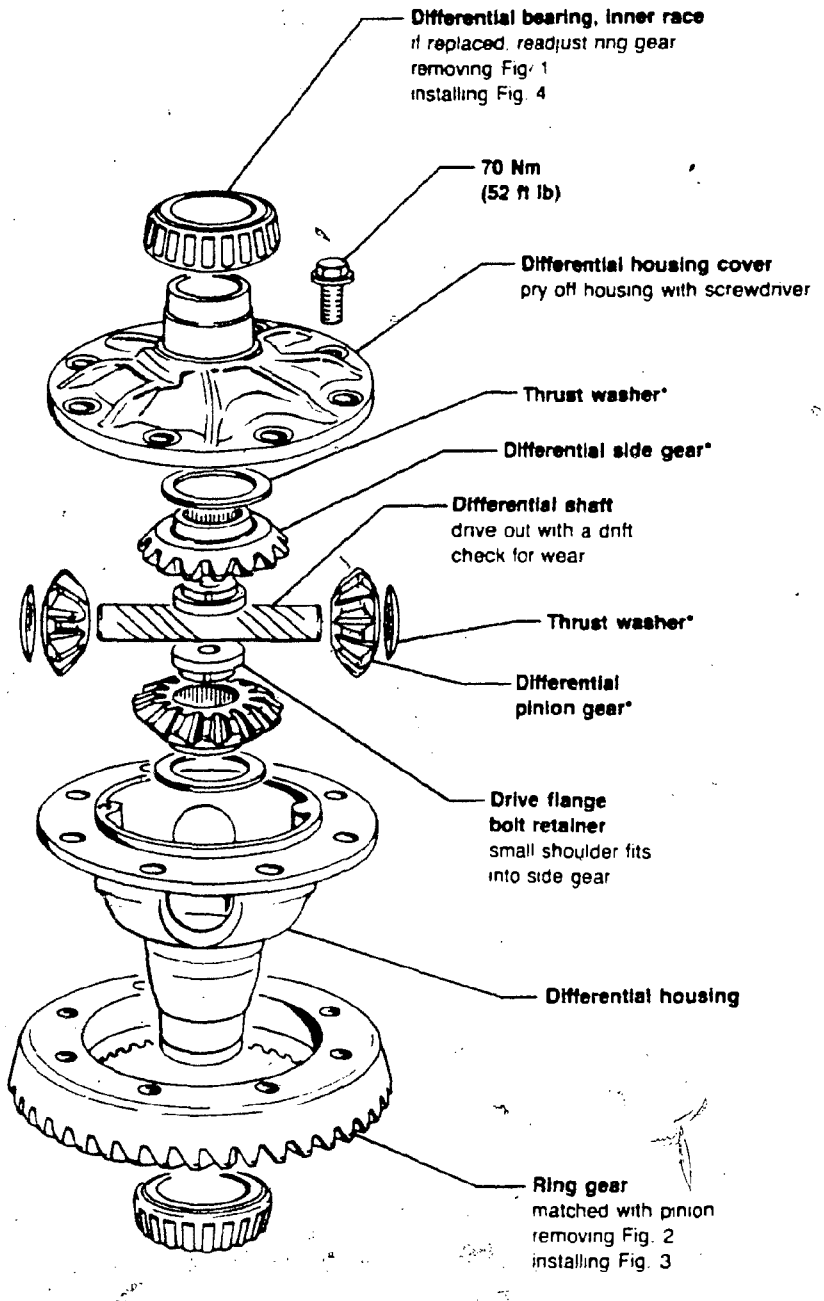

*check thrust washers for cracks and fractures, check gears for wear

39-1199

cardiagn.com

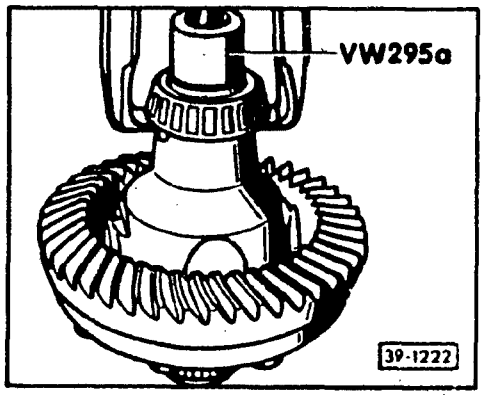

▶ **Fig. 1 Differential bearing, inner race, removing**

- do not interchange side to side

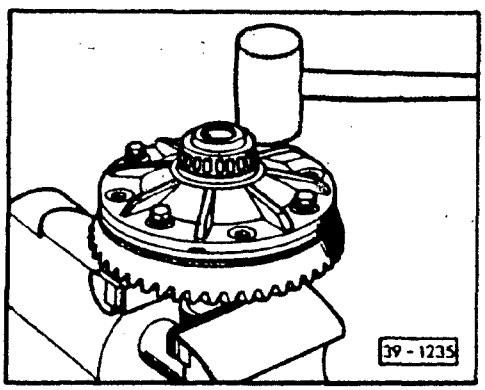

▶ **Fig. 2 Ring gear, removing**

- loosen bolts and remove gear by tapping on bolt heads

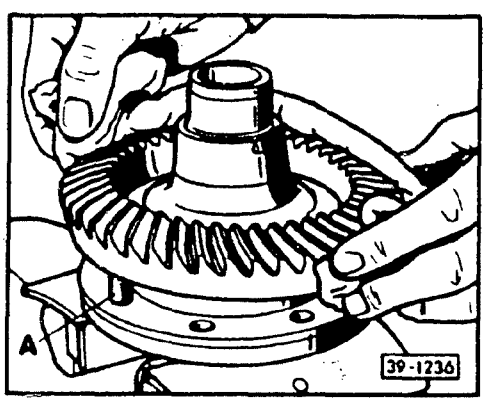

▶ **Fig. 3 Ring gear, installing**

- **A** = Centering pins (Qty. 2, local manufacture)
- heat gear to approximately 100°C (212°F)

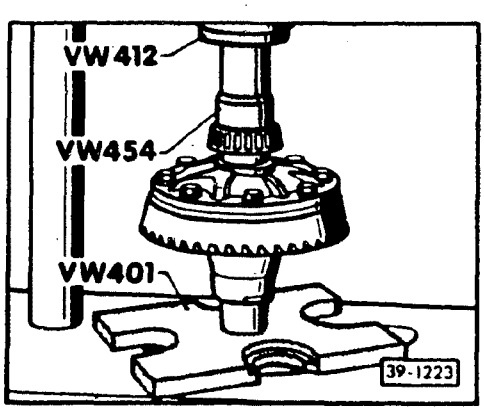

▶ **Fig. 4 Differential bearing, inner race, installing**

- heat bearing to approximately 100°C (212°F) and press on

cardiagn.com

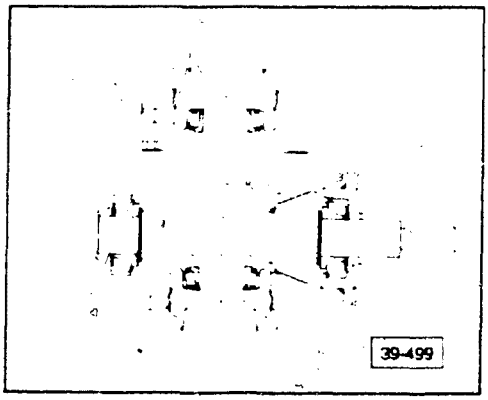

Ring gear/pinion, adjusting

Note

Careful adjustment of the ring gear and pinion is important to ensure that the final drive gives long service and runs silently. The ring gear pinion may only be replaced as a matched set.

Position of shims S_3, S_4

Ro — length of master gauge used in factory testing machine. **Ro** = 40.55 mm

r — ring and pinion deviation measured against master gauge used in production. Deviation **r** is always given in 0.01 mm. For example 42 means **r** = 0.42 mm

S_3 — shim behind pinion head provides bearing preload

S_4 — shim opposite pinion head determines pinion position

Ring gear, identification

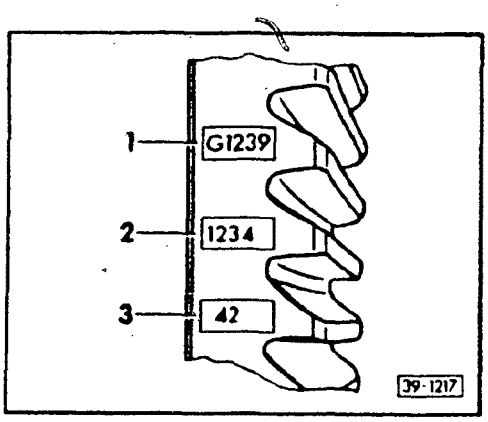

1 — gleason gear set, ratio = 12:39
2 — serial number of matched gear set
3 — deviation, **r** = 0.42 mm

Pinion, adjusting

- heat bearing behind pinion head to approximately 100°C (212°F), install on pinion shaft **without shim.** Press onto seat with approximately 3 tons pressure

cardiagn.com

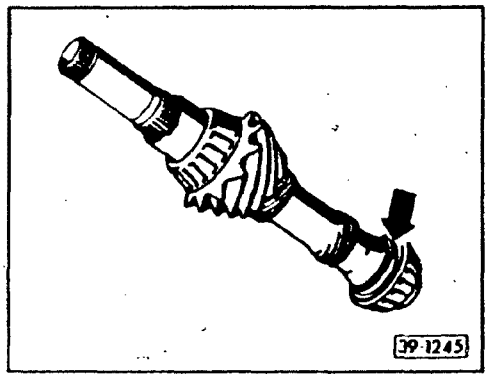

- heat bearing opposite pinion head to approximately 100°C (212°F), install on pinion with a 1.1 mm test shim (**arrow**). Press onto seat with approximately 3 tons pressure

> **CAUTION**
>
> Pinion **must** be installed with test shim. If not, the pinion shaft could touch housing and give incorrect results.

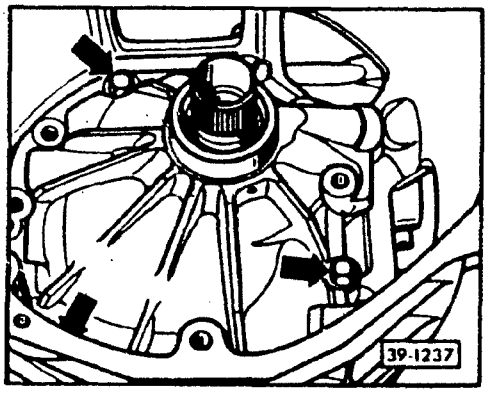

- install front cover plate with 4 bolts, tighten to 25 Nm (18 ft lb)
- insert pinion shaft and install rear cover plate with 5 bolts. Tighten bolts to 25 Nm (18 ft lb).

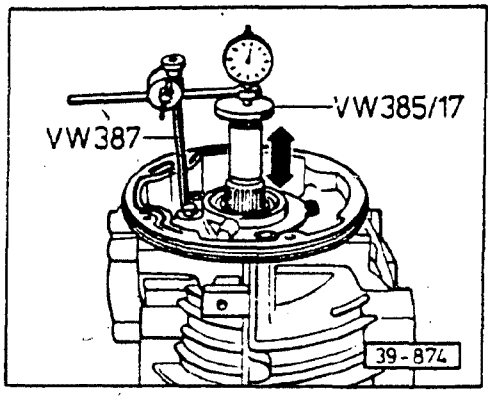

- install dial gauge holder **VW 387** on housing, place end plate **VW 385/17** on pinion shaft. Install dial gauge and set to zero
- move pinion up and down without turning it and note reading

> **CAUTION**
>
> Measurement will be incorrect if the pinion is turned.

- add 1.1 mm for test shim already installed, 0.15 mm for bearing preload and 0.10 mm for bearing settling to this reading. The result is **S total**

Example

Measured reading	1.48 mm
Shim already installed	+ 1.10 mm
Bearing preload	+ 0.15 mm
Settling allowance	+ 0.10 mm
Total shim thickness (**S total**)	= 2.83 mm

G-17

cardiagn.com

- remove pinion
- remove shim already installed (1.1 mm) and then install shims corresponding to total shim thickness — 2.83 mm in the example — at the bearing opposite pinion head
- reinstall pinion for measuring dimension **e**.
  e = the amount by which the setting of the pinion deviates from **Ro** with shims installed in their present position
- turn pinion several times in both directions

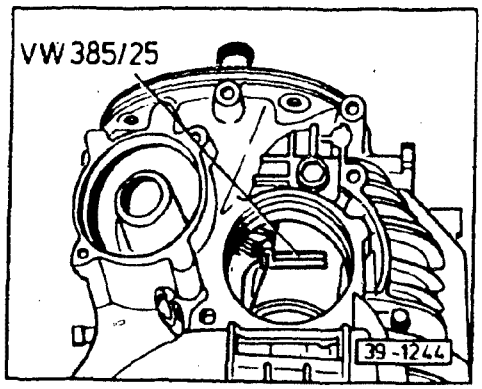

- place gauge **VW 385/25** on pinion shaft

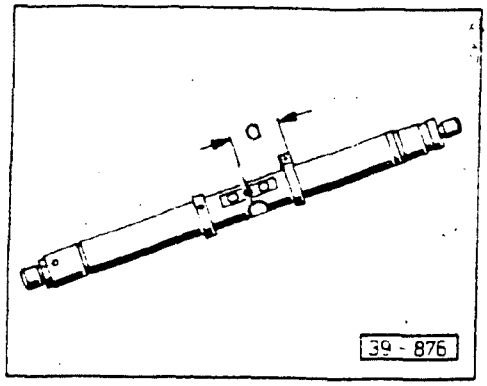

- adjust setting ring of universal measuring bar **VW 385/1**
  - **a** = 58 mm

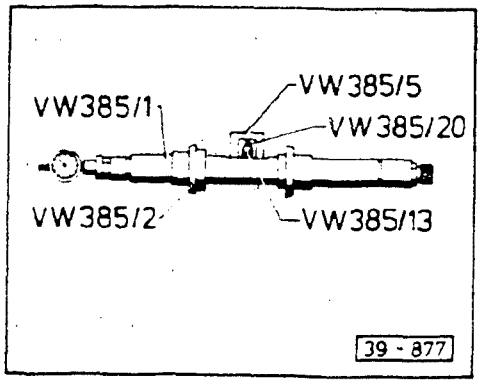

- assemble measuring bar with dial gauge extension **VW 85/20** = 3 mm long
- place master gauge **VW 385/5** on bar and zero dial indicator with 3 mm preload

Note

Adjustable master gauge **VW 385/30** can be used instead of master gauge **VW 385/5**. Set **Ro** to 40.55 mm.

cardiagn.com

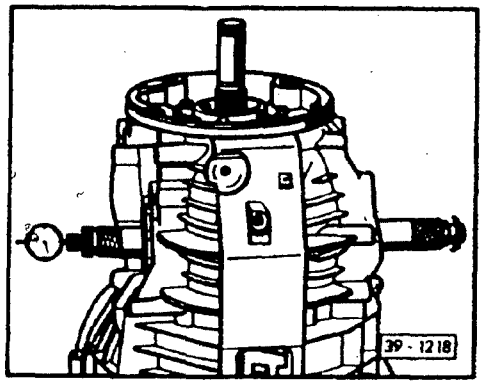

- screw in adjusting ring (opposite ring gear) until it is flush with housing
- insert measuring bar into housing and screw in adjusting ring (behind ring gear). Do not let dial gauge pin contact end plate
- move 2nd centering disc outwards with moveable setting ring until measuring bar can just be turned by hand
- turn measuring bar until dial gauge pin touches end plate and gauge shows maximum deflection **e** (return point)
- note reading **e** (example 2.20 mm) and determine thickness of shims S_3 and S_4

Shim S_3, determining thickness

$$S_3 = e - r$$

Example

Dial indicator reading **e**	2.20 mm
Deviation r marked on ring gear	− 0.42 mm
S_3 thickness	= 1.78 mm

- select shims from chart

Shim S_4, determining thickness

$$S_4 = S\ total - S_3$$

Example

Total shim thickness	2.83 mm
S_3 thickness	− 1.78 mm
S_4 thickness	= 1.05 mm

- select shims from chart

Note

Measure shims at several points with a micrometer. Check for burrs and damage.

- remove **S total** shims
- install selected shims
  - S_3 behind pinion head
  - S_4 on opposite end
- install pinion and lubricate bearings with hypoid transmission oil

cardiagn.com

CAUTION

Part numbers are for reference only. Always consult your Parts Department for latest information.

Shims available

Shim thickness range (mm)	Shim to be installed	Part No.
1.05 -1.100	1.100	082 519 141 AE
1.105-1.125	1.125	082 519 141 AF
1.130-1.150	1.150	082 519 141 AG
1.155-1.175	1.175	082 519 141 AH
1.180-1.200	1.200	082 519 141 AJ
1.205-1.225	1.225	082 519 141 AK
1.230-1.250	1.250	082 519 141 AL
1.255-1.275	1.275	082 519 141 AM
1.280-1.300	1.300	082 519 141 AN
1.305-1.325	1.325	082 519 141 AP
1.330-1.350	1.350	082 519 141 AQ
1.355-1.375	1.375	082 519 141 AR
1.380-1.400	1.400	082 519 141 AS
1.405-1.425	1.425	082 519 141 AT
1.430-1.450	1.450	082 519 141 BA
1.455-1.475	1.475	082 519 141 BB
1.480-1.500	1.500	082 519 141 BC
1.505-1.525	1.525	082 519 141 BD
1.530-1.550	1.550	082 519 141 BE
1.555-1.575	1.575	082 519 141 BF
1.580-1.600	1.600	082 519 141 BG
1.605-1.625	1.625	082 519 141 BH
1.630-1.650	1.650	082 519 141 BJ
1.655-1.675	1.675	082 519 141 BK
1.680-1.700	1.700	082 519 141 BL
1.705-1.725	1.725	082 519 141 BM
1.730-1.750	1.750	082 519 141 BN
1.755-1.775	1.775	082 519 141 BP
1.780-1.800	1.800	082 519 141 BQ
1.805-1.825	1.825	082 519 141 BR
1.830-1.850	1.850	082 519 141 BS
1.855-1.875	1.875	082 519 141 BT
1.880-1.900	1.900	082 519 141 CA

cardiagn.com

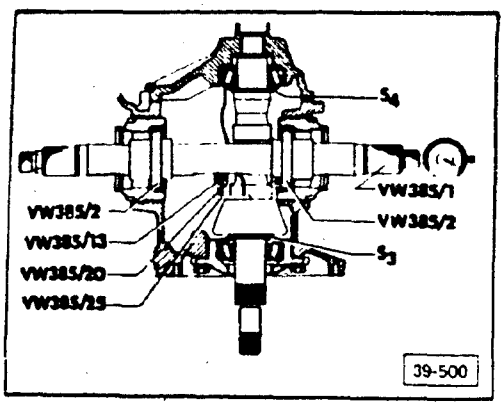

Pinion setting, checking

- arrangement of measuring tools

- install universal measuring bar
- zero dial indicator with 1 mm preload
- check that indicator reading equals recorded deviation **r** within tolerance of ± 0.04 mm

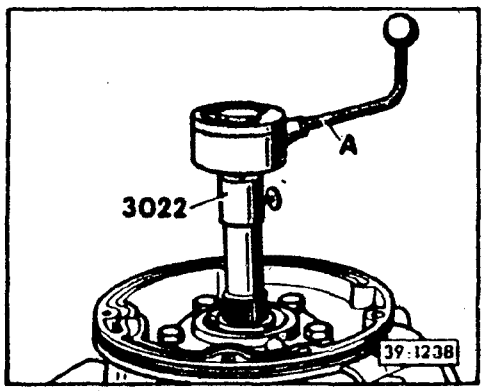

Turning torque, checking

- check turning torque
  - 250-550 Ncm (23-50 in lb)
  - **A** = Ncm or in lb torque wrench

Note

This figure is for new bearings. If used bearings are reinstalled the preload must be the same as measured before disassembling.

Note

After adjusting pinion, remove front and rear cover plates and take out pinion.

Ring gear, adjusting

- lightly coat front cover plate sealing surface with **VW D 000 300** sealing compound
- install differential and pinion. Install both cover plates
- tighten bolts of both cover plates to 25 Nm (18 ft lb)

- lightly coat O-rings and threads of adjusting rings with multipurpose grease.
- lubricate bearings with hypoid gear oil

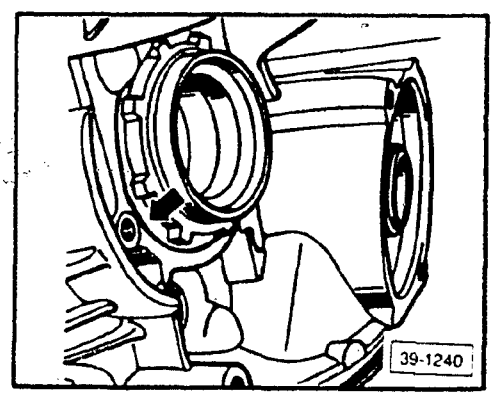

- screw in both adjusting rings until surfaces between teeth are flush with housing surface (**arrow**)
- carefully turn right adjusting ring (behind ring gear) until ring gear meshes with pinion with no backlash
- screw in left adjusting ring (opposite ring gear) and preload slightly so that there is no play in the bearings

cardiagn.com

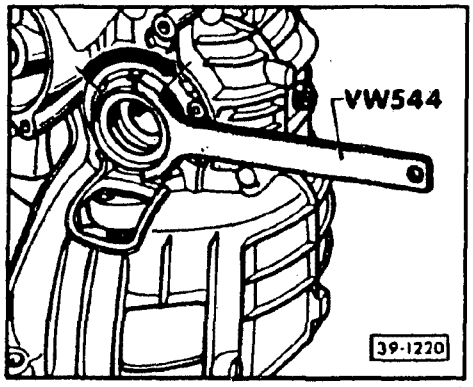

- turn right adjusting ring (behind ring gear) 1/2 tooth division **out**
- turn left adjusting ring **in** 2 tooth divisions (**arrow**). This correctly sets bearing preload and gear backlash

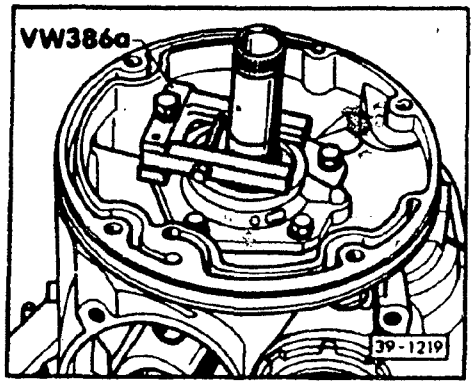

Backlash, checking

- turn pinion several times in both directions
- install clamp **VW 386** to rear cover plate and lock pinion with clamping screw

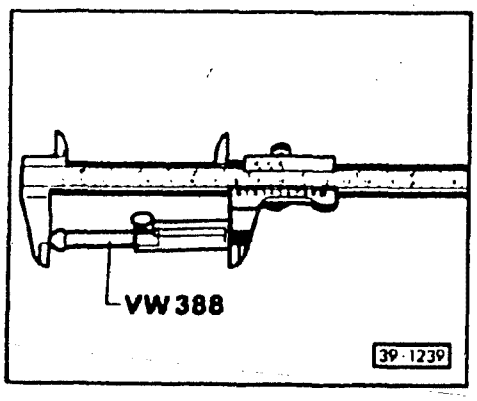

- set measuring lever **VW 388** to 62 mm and screw into clamping sleeve **VW 521/4**

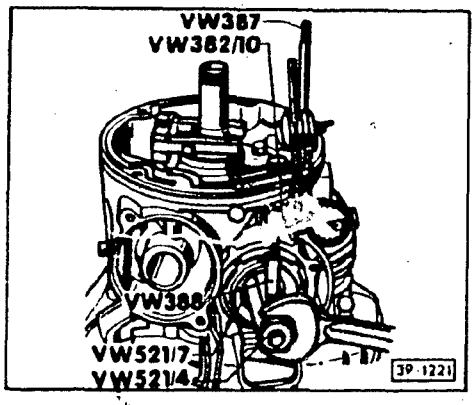

- install dial gauge with flat-ended extension **VW 382/10** in holder **VW 387**
- install clamping sleeve **VW 521/4** with sleeve **VW 521/7**. Install dial gauge holder **VW 387**
- measure backlash at four positions
  - **backlash should be 0.15 - 0.25 mm**

cardiagn.com

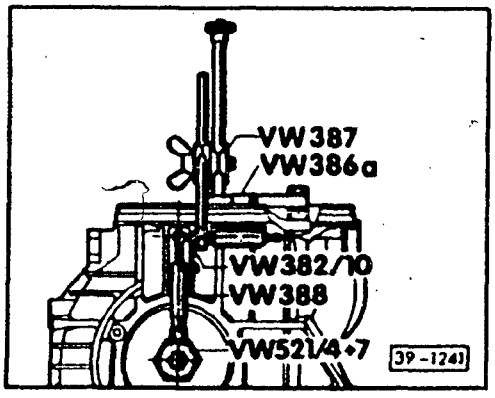

Backlash, checking
(Tool usage)

> **CAUTION**
>
> Individual readings must not differ by more than **0.05 mm**.
>
> The backlash figure given above only applies to a new ring gear/pinion. If a used set of gears is reinstalled they should be set to give the same backlash with which they were running **before** they were removed.

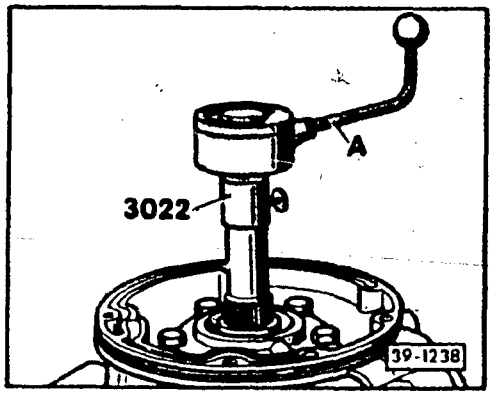

Note

If the backlash of new ring gear/pinion is outside tolerance it must be corrected by turning both adjusting rings the same amount so that the bearing preload is not changed.

- measure the total turning torque of all 4 bearings with a torque wrench on the pinion shaft
  - **A** = Ncm or in lb torque wrench
  - total turning torque must be at least 40 Ncm (3.4 in lb) more than the turning torque of the pinion shaft alone. If necessary increase the turning torque by screwing in both adjusting rings the same amount.

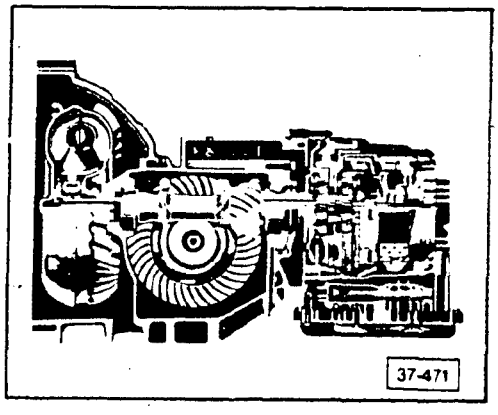

Component exchange

Automatic transmission/Final drive

1 = torque converter
2 = final drive
3 = transmission

- remove and clean complete transmission
- drain hypoid oil or ATF from defective component
- separate transmission and final drive

cardiagn.com

- where applicable, measure end play between transmission and final drive and select and install shims before installing new component
- install gaskets and oil seals supplied
- if only final drive is replaced, remove governor from old assembly and install in new final drive (check governor drive)

- join transmission and final drive
- install complete transmission
- fill with hypoid oil or ATF as required

Model	Engine		Transmission			Code letters
	Liter	KW	Manufactured		Part no. (complete)	
			From	To		
Audi 80	2.0	83	07/87		089 300 037 CX	KAU

Code letters	Components				
	Transmission part no.	Final drive part no.	Code letters	Converter part no.	Code letter
KAU	089 321 023 X	089 409 506 X	K*	089 323 571 X	Y

*These final drives can be installed with various transmissions and therefore have only one letter code. The rest of the code can be taken from the transmission it is installed with.

CAUTION

Part numbers are for reference only. Always check with your Parts Department for latest information.

cardiagn.com

Transmission/Final drive oil seals, removing/installing

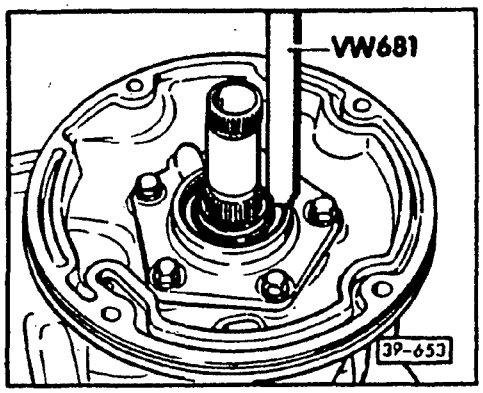

▶ **Fig. 1 Oil seals, removing**

- remove seals one after the other

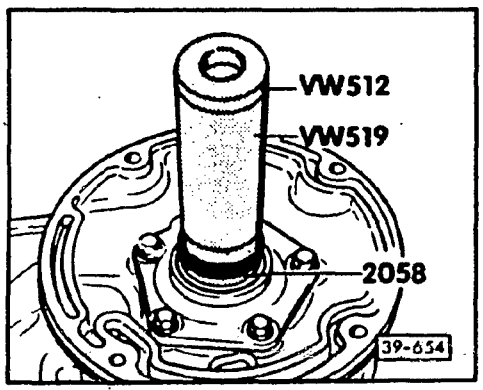

▶ **Fig. 2 Final drive oil seal, installing**

- drive in until seated
  - open side of lip faces final drive

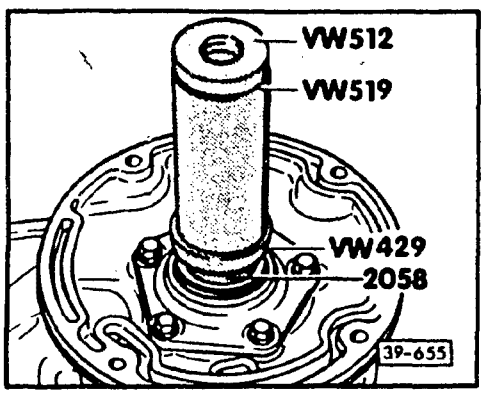

▶ **Fig. 3 Transmission oil seal, installing**

- drive in until flush
  - open side of lip faces transmission

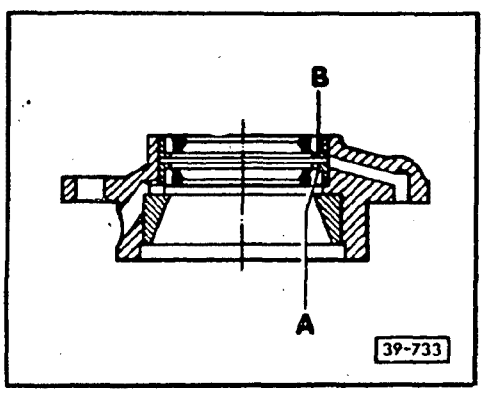

▶ **Fig. 4 Transmission/Final drive oil seals, installation position**

A = final drive seal
B = transmission seal

cardiagn.com

Axle flange oil seal, removing/installing (transmission installed)

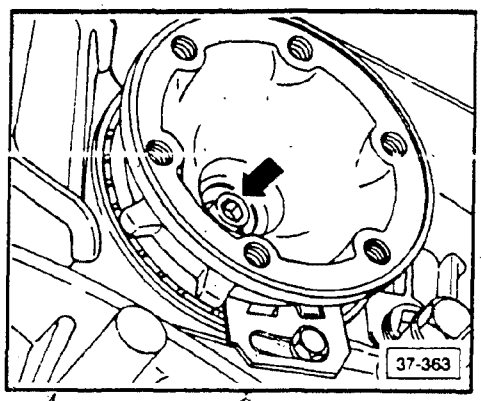

- remove axle shaft from flange
- remove bolt (**arrow**)
- hold from turning with drift
- place oil pan under vehicle
- remove axle flange

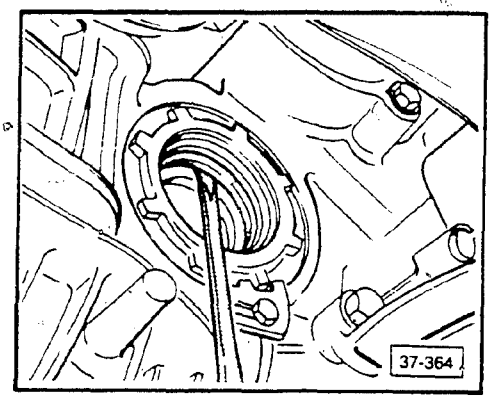

- pry out oil seal

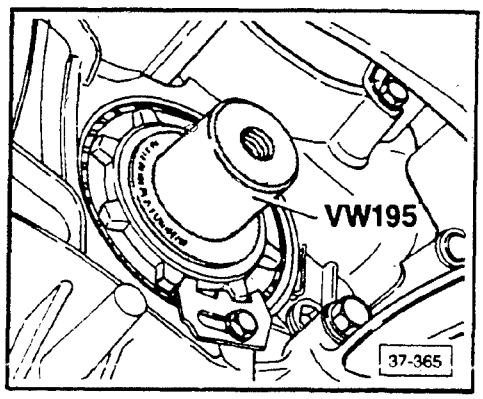

- drive in oil seal until seated

Note

Fill space between seal lips with multi-purpose grease.

- install axle flange
- install axle shaft to flange

Tightening torque

Axle flange to transmission	25 Nm (18 ft lb)
Axle shaft to flange	80 Nm (59 ft lb)

cardiagn.com

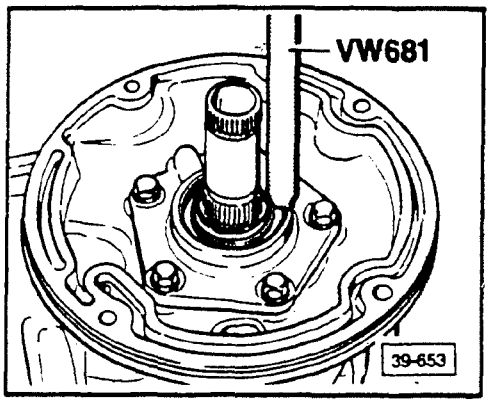

Transmission/final drive oil seal, removing/installing

When replacing the transmission, check oil seals in final drive (Fig. 3), replace if necessary.

▶ **Fig. 1 Oil seal, removing**

- pry out one oil seal after another

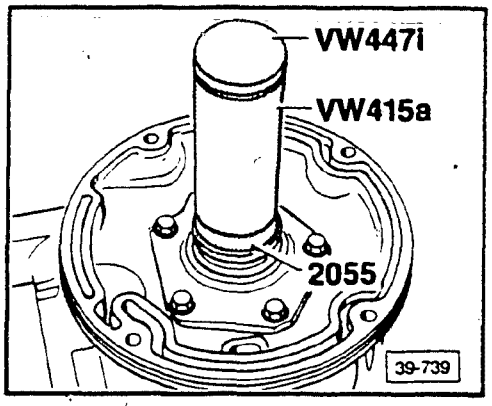

▶ **Fig. 2 Final drive oil seal, installing**

- install sleeve **2055**
- replace first oil seal (open side facing final drive Fig. 3 **A**)
- drive in oil seal until seated
- install second oil seal (open side facing transmission Fig. 3 **B**)
- drive in seal flush

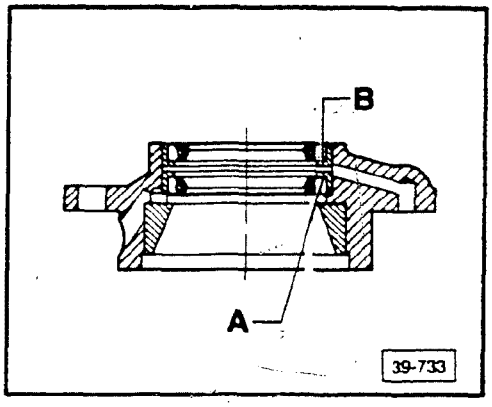

▶ **Fig. 3 Oil seals, installation position**

A — final drive oil seal

B — transmission oil seal

cardiagn.com

Index

097 Automatic

Torque converter assembly
- draining 32.3
- identifying 32.2

Torque converter oil seal
- removing/installing 32.2

cardiagn.com

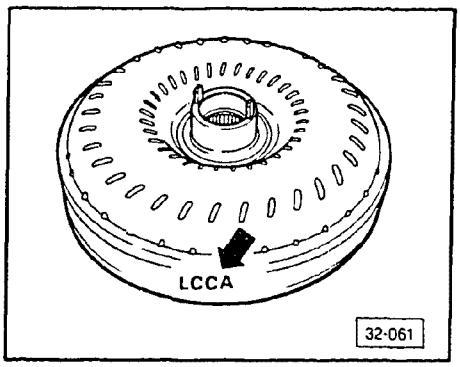

Torque converter, disassembling/ assembling

Torque converter, identifying

- identify torque converter by code letters (**arrow**)
  - see Technical data, Repair Group 37, for vehicle applications

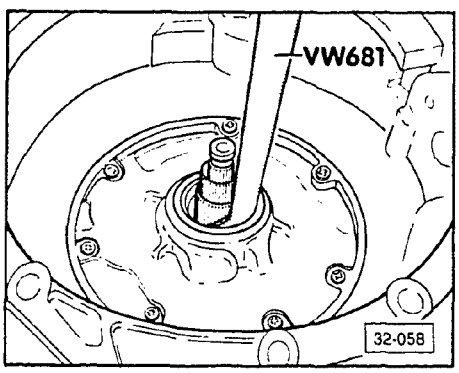

Oil seal for torque converter, removing

- remove seal with extractor lever **VW 681**

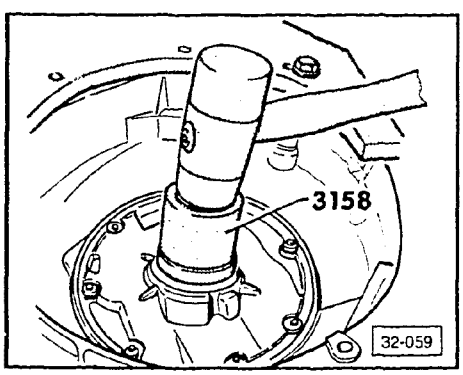

Oil seal for torque converter, installing

- drive seal in flush with **3158**

cardiagn.com

Torque converter, draining

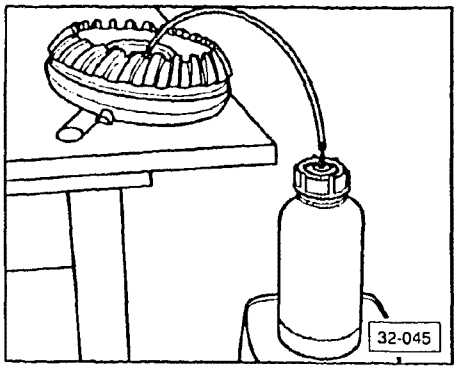

Note

If ATF is contaminated, drain the torque converter.

Use fluid evacuator **EX1**, if available, and follow the manufacturer's instructions. Otherwise, drain using the manual method:

- place converter in slanted position
- attach small inside diameter hose (with maximum outside diameter of 8 mm) to plastic bottle of about 2 liter capacity
- cut converter end of hose on an angle
- squeeze bottle and hold while inserting free end of hose into converter hub
  - make sure end of hose rests on bottom
- release bottle to allow ATF to flow
- loosen bottle cap when ATF begins to flow

cardiagn.com

Index

Automatic Trans. 097

ATF
- assembly 37.18
- checking/filling 37.20
- filter, removing 37.24

Selector lever/cable
- adjusting 37.5
- assembly 37.4
- lever housing 37.6
- lever switch 37.6
- shift lock checking 37.8
- solenoid switch 37.6

Shiftlock III
- general 37.9
- checking function 37.10
- assembly 37.11
- checking/adjusting 37.13
- lock cable 37.14

Shift points
- checking 37.23

Stall speed
- checking 37.22

Technical data
- chart 37.2

Transmission
★ - removing/installing 37.16

★ **NEW INFORMATION** since last filming.

cardiagn.com

Technical Data

Note

For locations of transmission identification codes, see Repair Group 00.

Transmission code letters	AEL	
date of manufacture from to	1-90	
Automatic transmission	097	
Torque converter code letter	LCCA	
Valve body code letters	LAA	
date of manufacture from to	1-90	
Number of splined plates Clutch K1	**inner** 5	**outer** 4
Clutch K2	5	5
Clutch K3	5	4
Brake B1	6	6
Brake B2	6	5
Application to engine	2.3L 125 kW	
Final drive ratio	3.70	
Gear ratios 1st gear 2nd gear 3rd gear 4th gear Reverse	2.71 1.55 1.00 0.68 2.11	
ATF cooler	integrated in engine radiator	
Vehicle application	Audi 90	

cardiagn.com

Technical Data

Note

For locations of transmission identification codes, see Repair Group 00.

Transmission code letters	CBU	
date of manufacture from to	1-91	
Automatic transmission	097	
Torque converter code letter	LBCA	
Valve body code letters	LAC	
date of manufacture from to	1-91	
Number of splined plates Clutch K1	**inner** 5	**outer** 4
Clutch K2	5	5
Clutch K3	5	4
Brake B1	6	6
Brake B2	6	7
Application to engine	2.3L 100 kW	
Final drive ratio	3.70	
Gear ratios 1st gear	2.71	
2nd gear	1.55	
3rd gear	1.00	
4th gear	0.68	
Reverse	2.11	
ATF cooler	integrated in engine radiator	
Vehicle application	Audi 90	

cardiagn.com

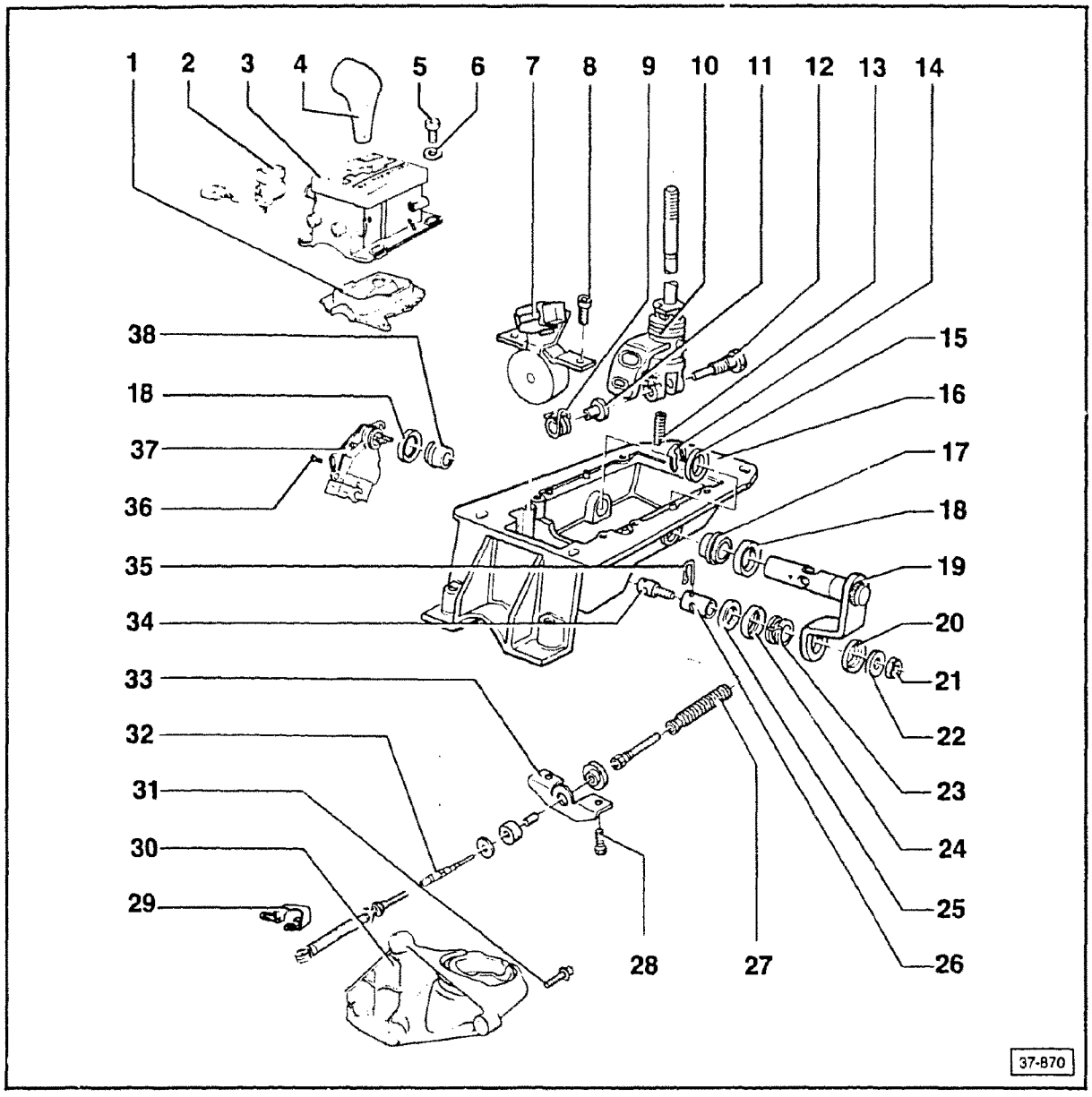

CAUTION

Before working on a running engine, always position selector lever at **P** and apply parking brake. Before shifting out of **P** or **N** with engine running, apply brake pedal to deactivate shift lock magnet.

Before repairing any part of electrical system, disconnect battery ground strap.

Note

When repairing the selector lever housing or solenoid switch, the center console must be removed. When repairing the selector mechanism, the heat insulation plate must be removed from underneath, before selector mechanism can be lowered down and removed.

1 — Boot

2 — Program switch (E122)
checking, see Repair Group D3

cardiagn.com

3 — Housing for selector lever
- install with **P** toward driving direction
- install after adjusting solenoid switch, page 37.6

4 — Knob for selector lever

5 — 9 Nm (79.7 in. lb or 91.8 cm kg)

6 — Washer

7 — Solenoid for shift lock magnet (N110)
- checking, page 37.8
- adjusting, page 37.6

8 — 10 Nm (7 ft lb)

9 — Torsion spring

10 — Selector lever
with fork piece to lock lever in **P** or **N** position

11 — Bushing for torsion spring

12 — Guide pin
install after installing compression spring

13 — Compression spring
install on selector lever before installing guide pin

14 — Clip

15 — Washer

16 — Mount
- apply sealant, Part No. **AKD 512 001 05**, between mount and body
- install bolts/washers for mount (tighten to **10 Nm or 7 ft lb**)

17 — Bushing

18 — Washer

19 — Shift lever

20 — Sleeve

21 — Nut — 20 Nm (15 ft lb)

22 — Washer

23 — Bushing

24 — Sleeve

25 — Washer

26 — Collet

27 — Boot
- replace if necessary
- ensure correct installation to keep moisture from penetrating selector cable

28 — 23 Nm (17 ft lb)

29 — Retaining clip

30 — Transmission support
with selector lever cable support

31 — 40 Nm (30 ft lb)

32 — Selector cable
- with guide and bushing
- lubricate cable ends lightly before installing
- do not bend or kink
- to adjust:
  — shift selector lever to **P**
  — loosen nut on selector lever cable clamp
  — move lever on transmission to **P** (on rear stop)
  — with cable in this tension-free position, tighten nut (item **21**) to **20 Nm (15 ft lb)**
- after adjusting cable, check function of selector lever switch and adjust if necessary

33 — Support bracket for selector lever cable

34 — Clamping screw

35 — Clip

36 — 5 Nm (44.3 in. lb or 51.0 cm kg)

37 — Selector lever switch
- aligning, page 37.6
- installing, page 37.7
- checking function:
  — engine must start in **N** or **P** only
  — back-up lights must light in **R**
  — if **NO**, turn switch in slots and check function again

38 — Bushing

cardiagn.com

Selector lever/cable assembly, disassembling/assembling

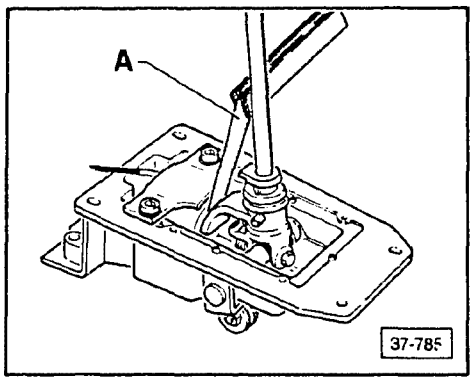

Solenoid switch, adjusting

A = 1.0 mm feeler gauge

- position selector lever in **R**
- insert gauge between selector lever and solenoid switch
- push solenoid switch against gauge and tighten, in this position

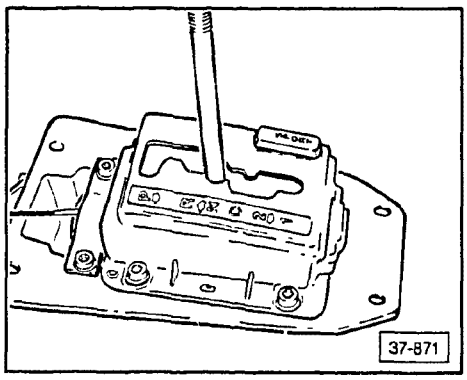

Selector lever housing to shift lever, adjusting

- align lower hole of clevis centrally with solenoid switch and apply voltage to switch
  - solenoid pin locks fork piece
- install gear shift lever housing so that selector lever is against position **N** on housing
  - from position **N**, lever must have equal travel between **R** and **D**

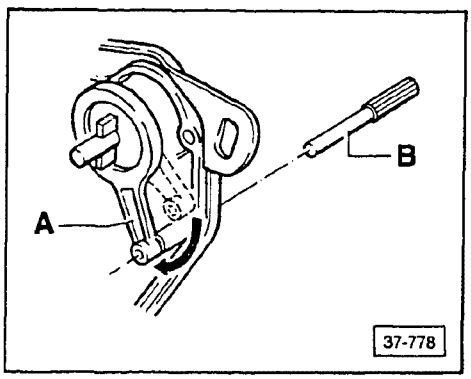

Selector lever switch, aligning

- install lever **A** with pin or drill bit **B** (4.0 mm) positioned through hole in housing

cardiagn.com

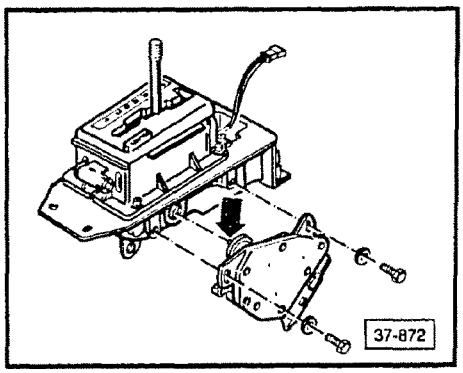

Selector lever switch, installing

- shift selector lever to position **N**
- install selector lever switch so operating lug (**arrow**) locks into lever shaft
- tighten mounting bolts to 5 Nm (44 in. lb or 51 cm kg)
- remove pin or drill bit

Note

After installing lever switch, check for correct functioning. See page 37.8.

cardiagn.com

Automatic shift lock, checking function

- shift selector lever to **P** and turn ignition **ON**
  - brake pedal not depressed
    = selector lever locked; cannot be shifted out of **P**
  - brake pedal depressed
    = selector lever can be shifted out of **P** position
- shift selector lever to **N** and turn ignition **ON**
  - brake pedal not depressed
    = selector lever locked; cannot be shifted out of **N**
  - brake pedal depressed
    = selector lever can be shifted out of **N**

Note

At speeds over 5 km/h (3.7 mph) and when shifting to **N**, the selector lever must not lock. The lever must allow shifting to a driving position without depressing the brake pedal.

At speeds under 5 km/h (3.7 mph) and when shifting to **N**, the selector lever must not lock until after one (1) second has elapsed. The selector lever then cannot be shifted until the brake pedal is depressed.

cardiagn.com

Shiftlock III

A revised selector linkage with an ignition key lock (Shiftlock III) is being phased into 1991 m.y. vehicle production.

The revised linkage locks the key in the ignition in selector positions **R**, **N**, **D**, **3**, **2** and **1**. The ignition key can only be inserted or removed with the selector in the **P** position. The selector lever cannot be moved out of the **P** position with the key removed.

In cases where the vehicle battery is without a charge, or if the battery is disconnected, the selector lever can still be moved out of the **P** position by placing the key in the "start" position.

The following components of the current system are revised with the introduction of the new Shiftlock III system:

- selector lever bracket
- selector lever
- shiftlock solenoid
- ignition switch

New parts include a lock cable and related components.

cardiagn.com

Shiftlock III, checking function

- move selector lever to **P** position
- turn key counterclockwise to last position
- remove key
  - selector lever must be locked in **P** position
- insert key and switch ignition **ON**
  - selector lever must be locked in **P** position (solenoid blocking lever)
- depress brake pedal
  - selector lever can be moved to any position (solenoid releases lever)
- move selector lever to **N** position
- release brake pedal
  - selector lever cannot be moved to any other position (solenoid blocking lever)
- depress brake pedal
  - selector lever can be moved to any position (solenoid releases lever)

Note

If the vehicle is moving at a speed over 5 km/h (3 mph) the solenoid must not activate and block the selector lever when it is moved to the **N** position.

If the vehicle is moving at a speed under 5 km/h (3 mph), which is close to a standstill, the solenoid can activate and block the selector lever approx. one second after it has been shifted into the **N** position.

Additional function checks

- check that vehicle will not start with selector lever in positions **R**, **D**, **3**, **2**, and **1**
- drive vehicle with cruise control **ON** and move selector lever from **D** to **2**
  - cruise control must not switch **OFF**

cardiagn.com

THIS FRAME INTENTIONALLY LEFT

BLANK

cardiagn.com

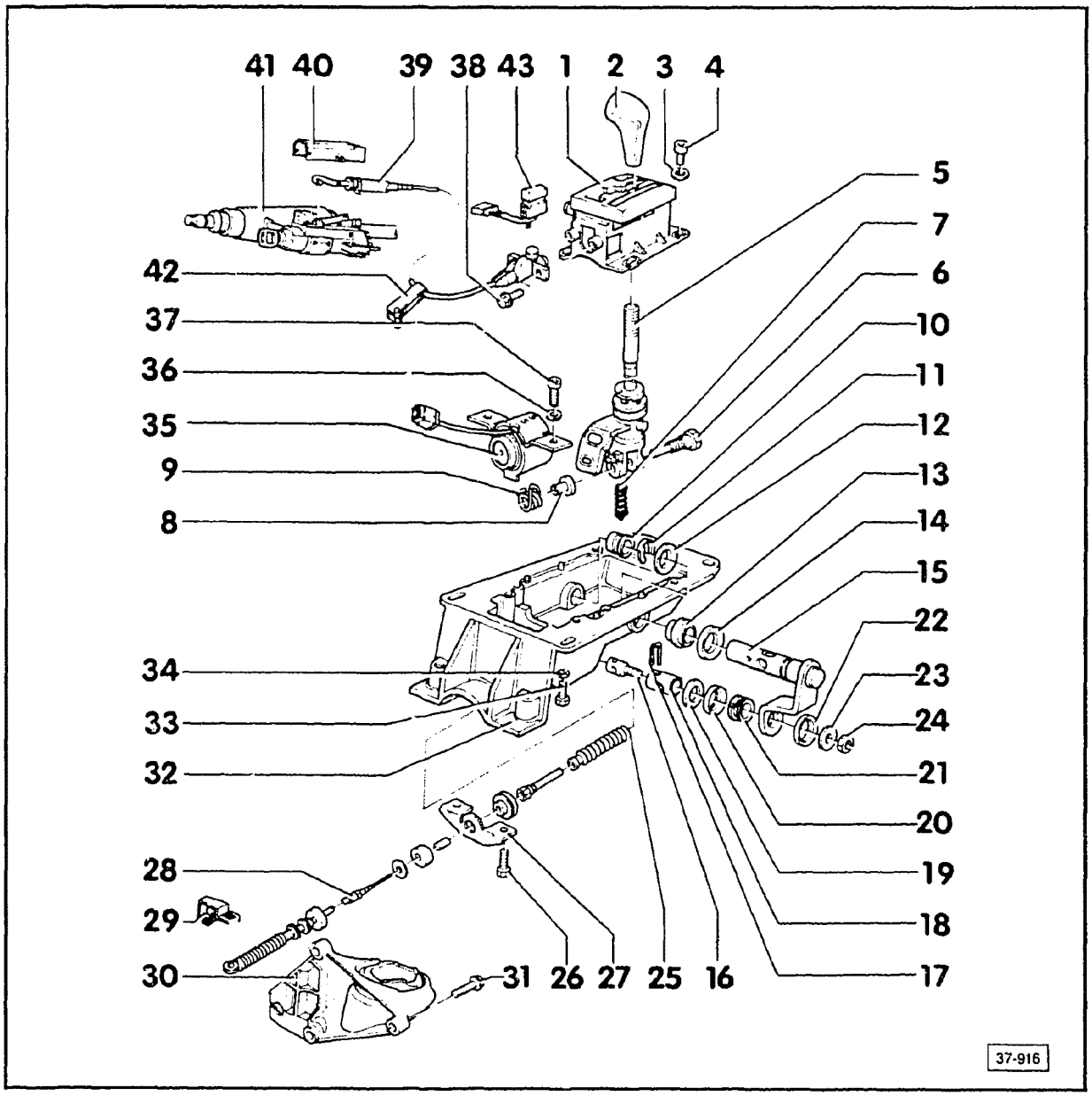

Note

If the lock cable is to be replaced, first remove the steering wheel and instrument cluster (see Repair Groups 70 and 94).

To remove the shift linkage lever, first remove the catalytic converter and exhaust system in the tunnel area, remove the heat shield, and then remove linkage from below.

1 — **Selector lever housing**
- adjusting, page 37.13
- after adjusting, install solenoid for shiftlock
- before removing bracket, disconnect cable

2 — **Selector lever handle**

3 — **Washer**

4 — **9 Nm (80 in. lb)**

cardiagn.com

5 — **Selector lever**
check dimension between selector lever and solenoid, page 37.13

6 — **Guide bolt**
- **22 Nm (16 ft lb)**
- install after compression spring (7)

7 — **Compression spring**
install before guide bolt (6)

8 — **Bushing**
for torsion spring (9)

9 — **Torsion spring**

10 — **Bushing**

11 — **Clip**
after installing, insert shift linkage lever

12 — **Washer**

13 — **Bushing**

14 — **Sleeve**

15 — **Shift linkage lever**

16 — **Lock bolt**

17 — **Clip**

18 — **Clamping sleeve**

19 — **Washer**

20 — **Sleeve**

21 — **Bushing**
install in shift linkage lever

22 — **Sleeve**

23 — **Washer**

24 — **20 Nm (15 ft lb)**

25 — **Boot**
replace if damaged

26 — **23 Nm (17 ft lb)**
secure with **AMV 200 000**

27 — **Cable support bracket**
install with angled end toward shift linkage

28 — **Selector lever cable**
- with guide and bushing
- replace cable if boot is damaged
- tighten cable to supports, **13 Nm (10 ft lb)**
- do **NOT** kink or bend cable
- light lubricate ball socket before installation
- adjusting: place selector lever in **P**, loosen nut on cable clamp, place transmission lever in **P** position (to rear stop), tighten nut to **20 Nm (15 ft lb)**

> **CAUTION**
>
> To prevent the entry of moisture into the cable housing, ensure that the boot is correctly mounted when installing the selector lever cable.

29 — **Retaining clip**
remove selector cable before prying off

30 — **Support bracket (on transmission)**
with mounting for cable

31 — **40 Nm (30 ft lb)**

32 — **Shift mount**
seal with **AKD 512 000 05** between mount and body

33 — **10 Nm (7 ft lb)**

34 — **Washer**

35 — **Shiftlock solenoid**
- push solenoid against shift mount and tighten bolts
- check dimension between selector lever and solenoid, page 37.13

36 — **Washer**

37 — **10 Nm (ft lb)**

38 — **9 Nm (80 in. lb)**

39 — **Lock cable**
- removing/installing, page 37.14
- do **NOT** bend

40 — **Cover**

41 — **Ignition switch**

42 — **Clip**

43 — **Program switch**
checking, see Repair Manual Group D3

cardiagn.com

Selector lever to solenoid, checking

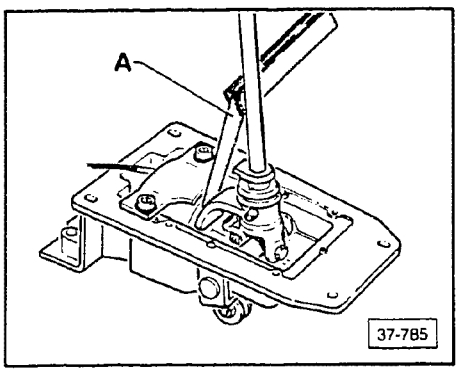

- place selector in **R** position
- insert feeler gauge **A** and measure gap between lever and solenoid
  - must be: 0.6 mm to 1.4 mm (0.024 in. to 0.055 in.)
- move solenoid in slots if adjustment is necessary

Selector lever housing, adjusting

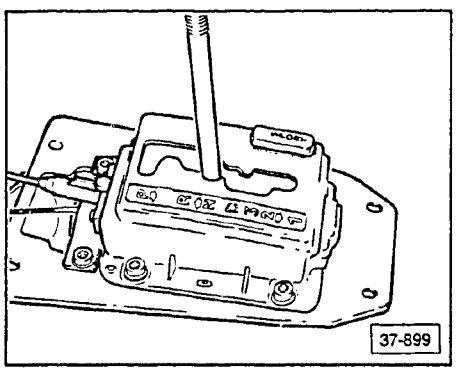

Position housing with selector in **N** position.

cardiagn.com

Lock cable, removing/installing/adjusting

Removing

- remove center console (see Repair Group 70)
- remove steering wheel and instrument cluster (see Repair Groups 48 and 90)
- move selector lever to **N** position
- remove bolt (**arrow**)
- remove cable from selector lever housing

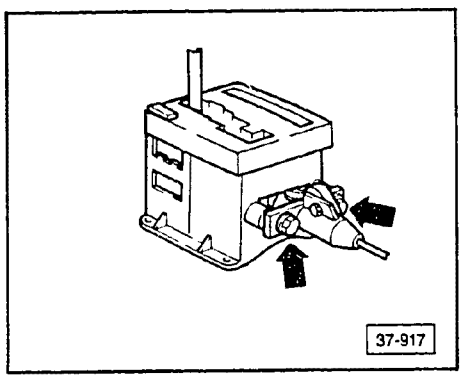

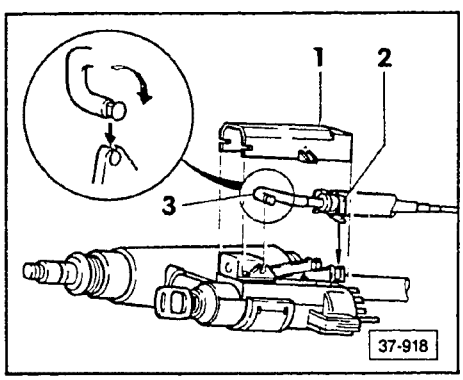

- remove cap **1**
- remove spring clip/cable **2** from steering column switch assembly
- turn lock cable hook **3** approx. 90° and remove from mounting eye on top of ignition switch
- remove lock cable clip at air duct and remove lock cable (see illustration 37-919 on next page)

Installing/adjusting

- insert lock cable hook **3** from top into mounting eye on ignition switch and turn approx. 90°
  - flat sides of hook and mounting eye must align when inserting (see inset)
- insert spring clip/cable **2** securely into holder
- install cover **1** onto ignition switch

cardiagn.com

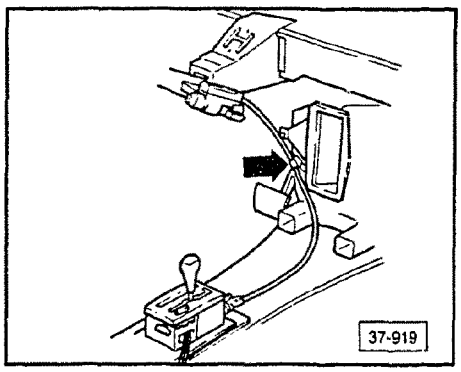

- loosen bolt **1**
- switch ignition **ON**
- insert feeler gauge between stop and lock pin
  - **A** = 1.5 mm
- adjust lock cable by pushing in direction of arrow so that lock pin pushes against feeler gauge
- tighten bolt **1**
- actuate locking cable several times and remeasure dimension with feeler gauge
  - dimension **A** must be: 1.4 to 1.7 mm
- move selector lever to **N** position
- mount lock cable to selector lever bracket

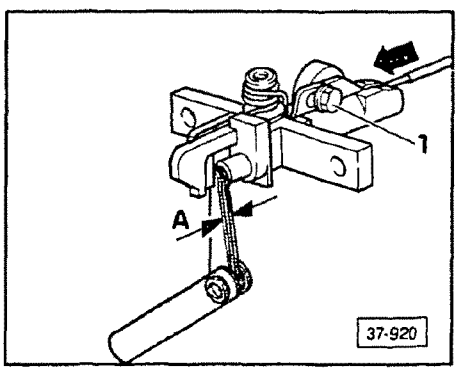

Note

Ensure that the cable is routed kink-free and fastened by the clip (**arrow**)

Functional check

- turn ignition key to **OFF** position
- move selector lever directly to **P** position without shifting to a drive position first
  - ignition key can be removed
- insert key in ignition and switch **ON**
- depress brake pedal and shift selector lever into **D** position
- turn ignition key to **OFF** position
  - ignition key cannot be removed

cardiagn.com

Transmission, removing/installing

Removing

- disconnect battery ground strap
- disconnect speedometer connector on transmission
- disconnect thermoswitch connector
- remove engine/transmission upper mounting bolts
- disconnect oxygen sensor connector
- disconnect transmission ground strap

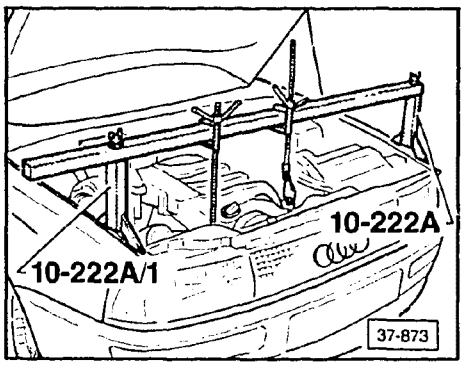

- install engine support assembly, as shown
- remove engine lower cover and mounting
- remove front exhaust pipe
- disconnect axle shafts from transmission
- remove starter bolts
  - position starter aside; secure with wire

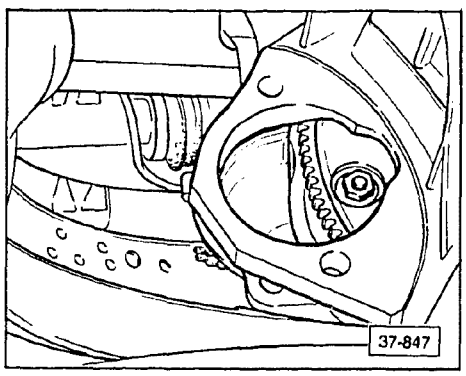

- remove torque converter nuts (3)
- remove heat shield for multi-function switch

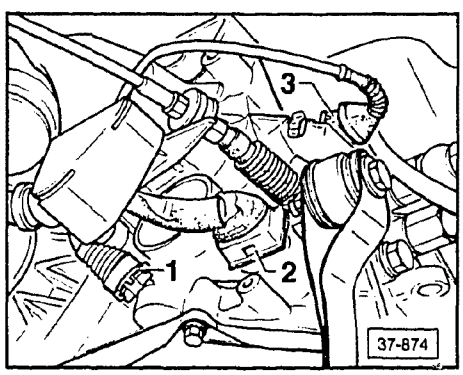

- disconnect harness connectors **1**, **2** and **3**
- remove wiring harness clamp from transmission

cardiagn.com

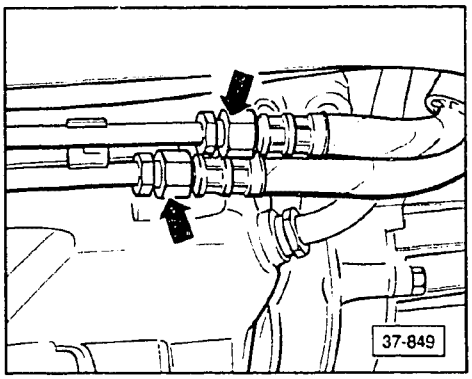

- disconnect ATF cooler lines/hoses (**arrow**)
  - plug hoses with seal, Part No. **357 853 586 B**
  - seal pipes with rubber cap, Part No. **055 121 324**

> **CAUTION**
>
> Part numbers are for reference only. Always check with your Parts Department for latest information.

- support transmission with **VAG 1383** or suitable transmission jack
- remove transmission support
- remove selector lever retaining clip
  - disconnect cable
- remove engine/transmission lower bolts
- position axle shafts to the rear
- separate transmission from engine
  - lower transmission carefully
  - secure torque converter to prevent it from falling

Installing

Note

Proceed in reverse order of removal and note the following:

- be sure guide sleeves are aligned correctly, during installation
- check selector lever cable
  - adjust if necessary. See page 37.4

Tightening torques

Axle shafts to flanges	80 Nm (59 ft lb)
Torque converter to plate	60 Nm (44 ft lb)
Trans to engine (4 cyl)	55 Nm (41 ft lb)
Trans to engine (5 cyl)	see next page
Transmission bracket on transmission	40 Nm (30 ft lb)
Transmission mount on support	110 Nm (81 ft lb)

cardiagn.com

Engine/transmission, mounting

CAUTION
Before installing an engine, be sure that the dowel sleeves are in place (see items **A** and **B** in next two illustrations).

For some replacement transmissions paired with 5-cylinder engines, an offset dowel sleeve (Part No. **012 301 153**) may be required.

When installing a new engine, check for the presence of a bushing in the crankshaft. This bushing must be driven in **first**, before installing the drive plate.

Part numbers are for reference only. Always check with your Parts Department for latest information.

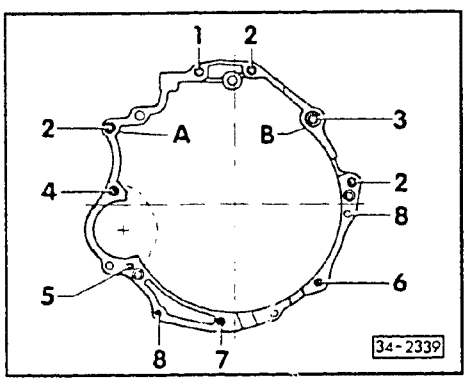

Tightening torques (5-cylinder engines)

Position	Bolt size	Quantity	Nm (ft lb)
1	M12 x 67	1	65 (48)
2	M12 x 80	3	65 (48)
3	M12 x 90	1	65 (48)
4	M12 x 100	1	65 (48)
5	M10 x 120	1	65 (48)
6	M10 x 50	1	45 (33)
7	M10 x 38	1	45 (33)
8	M8 x 40	2	25 (18)

Items **A** and **B** are dowel sleeves for centering.

cardiagn.com

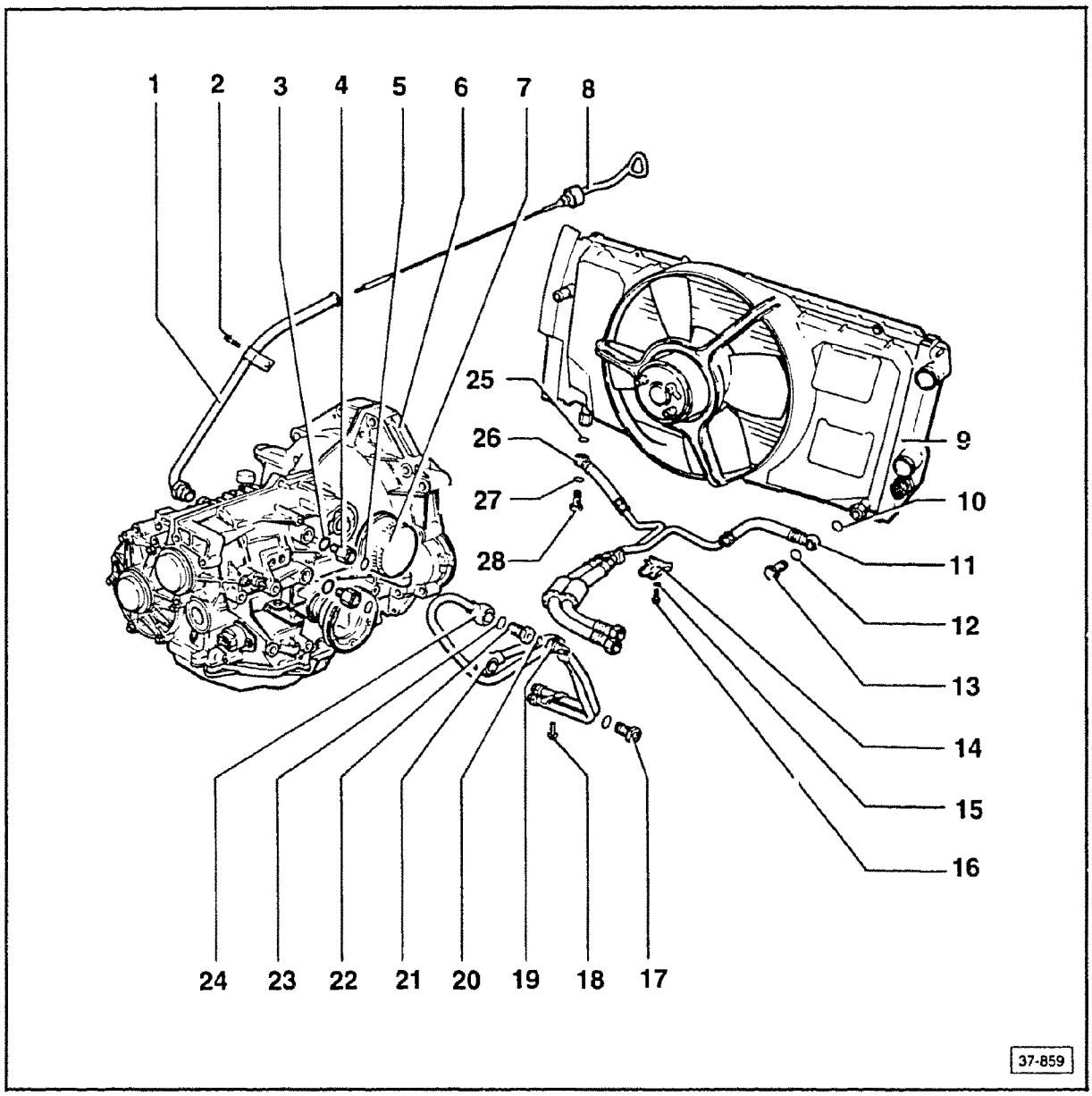

1 — **ATF filler tube**
tightening torque at oil pan: **80 Nm (60 ft lb)**

2 — **10 Nm (7 ft lb)**

3 — **O-ring**
always replace

4 — **Line nut — 60 Nm (44 ft lb)**

5 — **Washer**
always replace

6 — **Transmission housing**

7 — **ATF filter**
discontinued, see ATF filter, removing

8 — **ATF dipstick**

9 — **Radiator**
with integrated ATF radiator

10 — **Washer**
always replace

11 — **ATF cooler return line**
tightening torque at return pipe: **40 Nm (30 ft lb)**

cardiagn.com

12 — **Washer**
always replace

13 — **Banjo bolt — 40 Nm (30 ft lb)**

14 — **Retaining clamp**

15 — **Washer**

16 — **10 Nm (7 ft lb)**

17 — **Banjo bolt — 30 Nm (22 ft lb)**

18 — **10 Nm (7 ft lb)**

19 — **Thermoswitch — 15 Nm (11 ft lb)**

20 — **Washer**
always replace

21 — **Feed pipe**
tightening torque at feed line: **40 Nm (30 ft lb)**

22 — **Banjo bolt — 30 Nm (22 ft lb)**
with opening for thermoswitch

23 — **Washer**
always replace

24 — **ATF cooler return pipe**
tightening torque at return line: **40 Nm (30 ft lb)**

25 — **Banjo bolt — 40 Nm (30 ft lb)**

26 — **O-ring**
always replace

27 — **ATF cooler feed line**
tightening torque at feed pipe: **40 Nm (30 ft lb)**

28 — **Washer**
always replace

cardiagn.com

ATF (automatic transmission fluid), checking/filling

Checking

Note

The transmission fluid level only needs to be checked when diagnosing a suspected transmission problem.

Always check transmission fluid under the following conditions:

- selector lever at **P**
- engine idling

> **CAUTION**
>
> Vehicle must be on level surface during ATF check.
>
> Use only lint-free cloth when wiping dipstick.

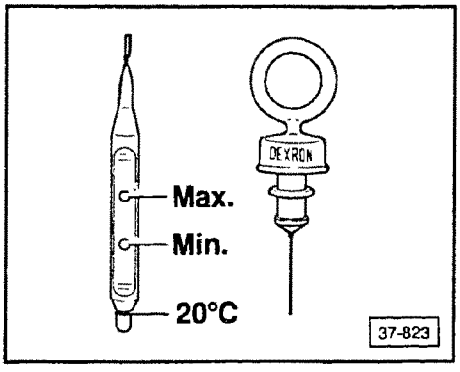

- check ATF initially, when engine is cold
  - fluid level must be up to 20°C (68°F) mark
- bring ATF to operating temperature (60°C/140°F)
  - drive approximately 10 km from a cold start to reach operating temperature
  - measure operating temperature using **VAG 1551**
- check ATF dipstick again. Level must be between **Max.** and **Min.** marks
  - if too high, drain fluid to specifications. Probe **Z417 113 WE** and **VAG 1358** can be used for this purpose
  - if too low, add fluid to specifications

> **CAUTION**
>
> Do **NOT** overfill transmission.

cardiagn.com

Filling

> **CAUTION**
>
> Only use ATF with the designation "DEXRON." Do **NOT** use lubricant additives.
>
> Use only lint-free cloth when wiping dipstick.

- remove transmission dipstick and insert funnel into filler tube
- add ATF
  - during initial filling, add 3 liters
- start engine
  - select all lever positions with vehicle stationary
- check ATF level

cardiagn.com

CONTINUED IN THE

BEGINNING OF NEXT ROW

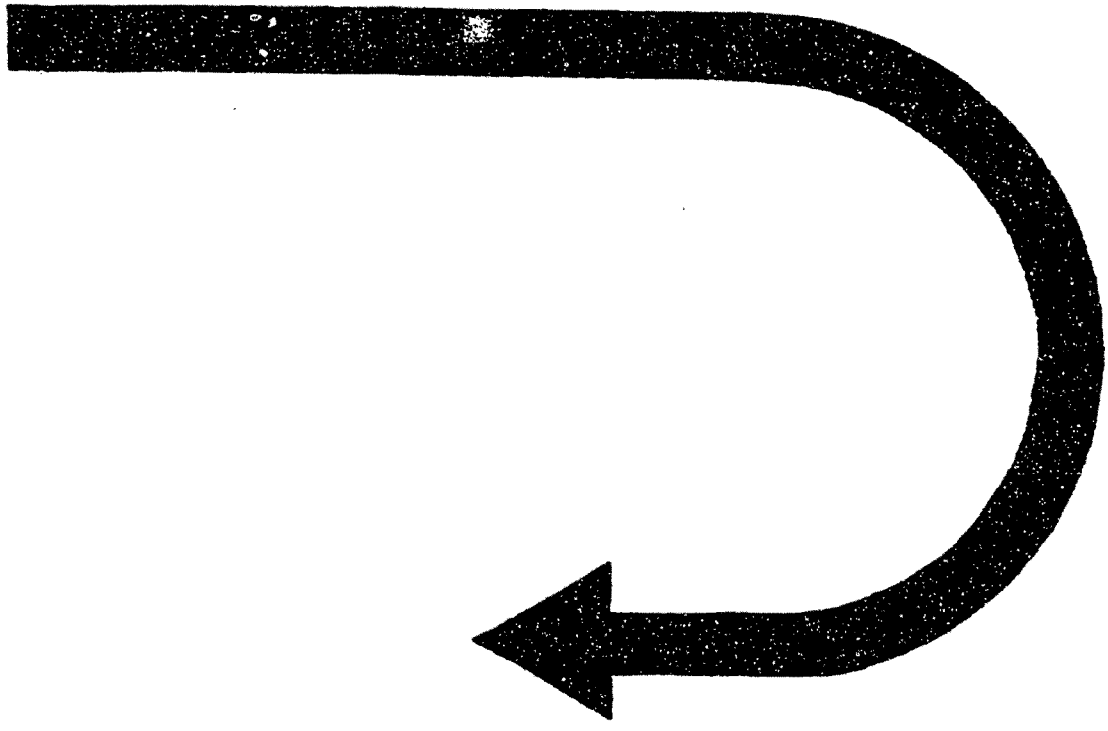

cardiagn.com

Stall speed, checking

Check stall speed only if vehicle exhibits poor performance or poor acceleration.

Before measuring stall speed, check that the correct torque converter is installed.

Note

The stall speed decreases as height above sea level increases (approximately 125 RPM per 325 feet)

- connect tachometer **VW 1367**
- engage parking brake
- start and warm engine
- hold foot brake firmly, put selector lever in **D** and depress accelerator briefly to full throttle
- check that engine runs within stall speed range

Transmission code	Torque converter code	Stall speed (RPM)
AEL	LCCA	2250-2450
CBU	LBCA	2550-2750

- if not within range, following are possible causes:
  - stall speed too high:
    K1 clutch slipping
    or
    one-way clutch slipping
  - stall speed up to 200 RPM too low:
    check engine adjustments
  - stall speed over 200 RPM too low:
    torque converter is defective

CAUTION

Do not continue stall speed test longer than time required to read tachometer. Maximum stall speed test time is 5 seconds. Wait at least 20 seconds before repeating test.

cardiagn.com

Shift points, checking

If the transmission seems to shift to the next gear too early or too late, check the shifting points with those specified in the chart.

The observed shift points must fall wihin the mph range specified in the chart.

H = hydraulic shift
M = mechanical shift

Determine the cause of any deviations in the shifting points by using the transmission self-diagnosis, Repair Group **D3**.

Transmission code: AEL

Shift	Full Throttle		Kickdown	
	ECO mph	Sport mph	ECO mph	Sport mph
1H-2H	17-21	32-36	32-36	32-36
2H-3H	37-41	58-62	58-62	58-62
3H-3M	32-36	42-46	58-62	58-62
3M-4M	85-89	99-102	99-102	99-102
4M-3M	58-55	82-78	99-95	99-95
3M-3H	30-27	35-32	46-42	55-52
3H-2H	31-27	31-27	46-42	55-52
2H-1H	4-1	16-12	30-27	30-27

Transmission code: CBU

Shift	Full Throttle		Kickdown	
	ECO mph	Sport mph	ECO mph	Sport mph
1H-2H	21-24	29-32	29-32	29-32
2H-3H	39-42	55-59	55-59	55-59
3H-3M	39-42	55-59	55-59	55-59
3M-4M	81-85	88-92	88-92	88-92
4M-3M	58-55	82-78	89-85	89-85
3M-3H	32-28	37-33	55-52	55-52
3H-2H	30-27	30-27	55-52	55-52
2H-1H	7-4	15-11	29-25	29-25

cardiagn.com

ATF filter, removing

The ATF filter for new transmissions has been discontinued as of February 1991.

The ATF filter must be removed on all current transmissions and the housing sealed with a cover and sealing ring, Part No. 097 409 091 A.

Remove the ATF filter from all current transmissions during normal maintenance service.

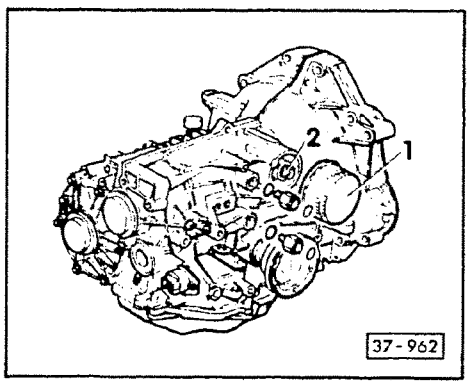

- remove ATF filter 1 and threaded sleeve 2

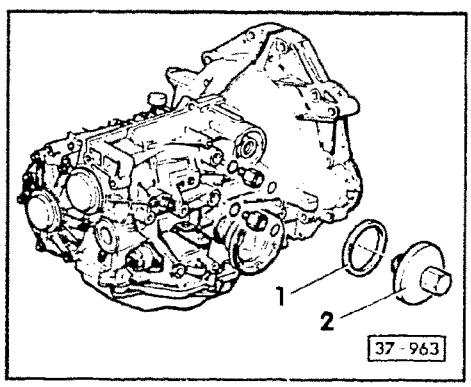

- coat flat sealing ring 1 with ATF
- install cover 2 with flat sealing ring 1 and torque to 25 Nm (18 ft lb)
- check ATF level (see Repair Group 37 in Repair Manual)
- check transmission for leaks

> **CAUTION**
> Part numbers are for reference only. Always check with your Parts Department for latest information.

cardiagn.com

Index

097 4-speed Automatic

ATF pump
- assembly 38.17
- replacing 38.5

Clutches K1 and K2
- adjusting/checking freeplay 38.13

One-way clutch (F)
- assembly 38.18
- disassembling/assembling 38.19
- installing 38.6

Planet carrier
- adjusting/checking 38.8

Reverse brake (B1)
- adjusting/checking 38.10

Reverse clutch (K2)
- installing 38.6

Second/fourth gear brake (B2)
- adjusting 38.15
- replacing plates 38.5

Small driveshaft
- replacing bolt 38.7

Third/fourth gear clutch (K3)
- installing 38.6

Transmission
- assembly 38.2

1st to 3rd gear clutch (K1)
- assembly 38.21
- disassembling/assembling 38.24

3rd/4th gear clutch (K3)
- assembly 38.27
- spring support clip 38.29

Parking lock
- assembly 38.35
- gear change shaft assembly 38.37
- lock spring bolts 38.38
- parking pawl pin 38.37
- sealing plug 38.38

Reverse clutch (K2)
- assembly 38.25
- spring support clip 38.26

Valve body
- assembly 38.31
- disassembling/assembling 38.34
- identifying 38.33
- installed position 38.34
- manual valve assembly 38.34
- oil strainer 38.33
- sealing plug 38.34

cardiagn.com

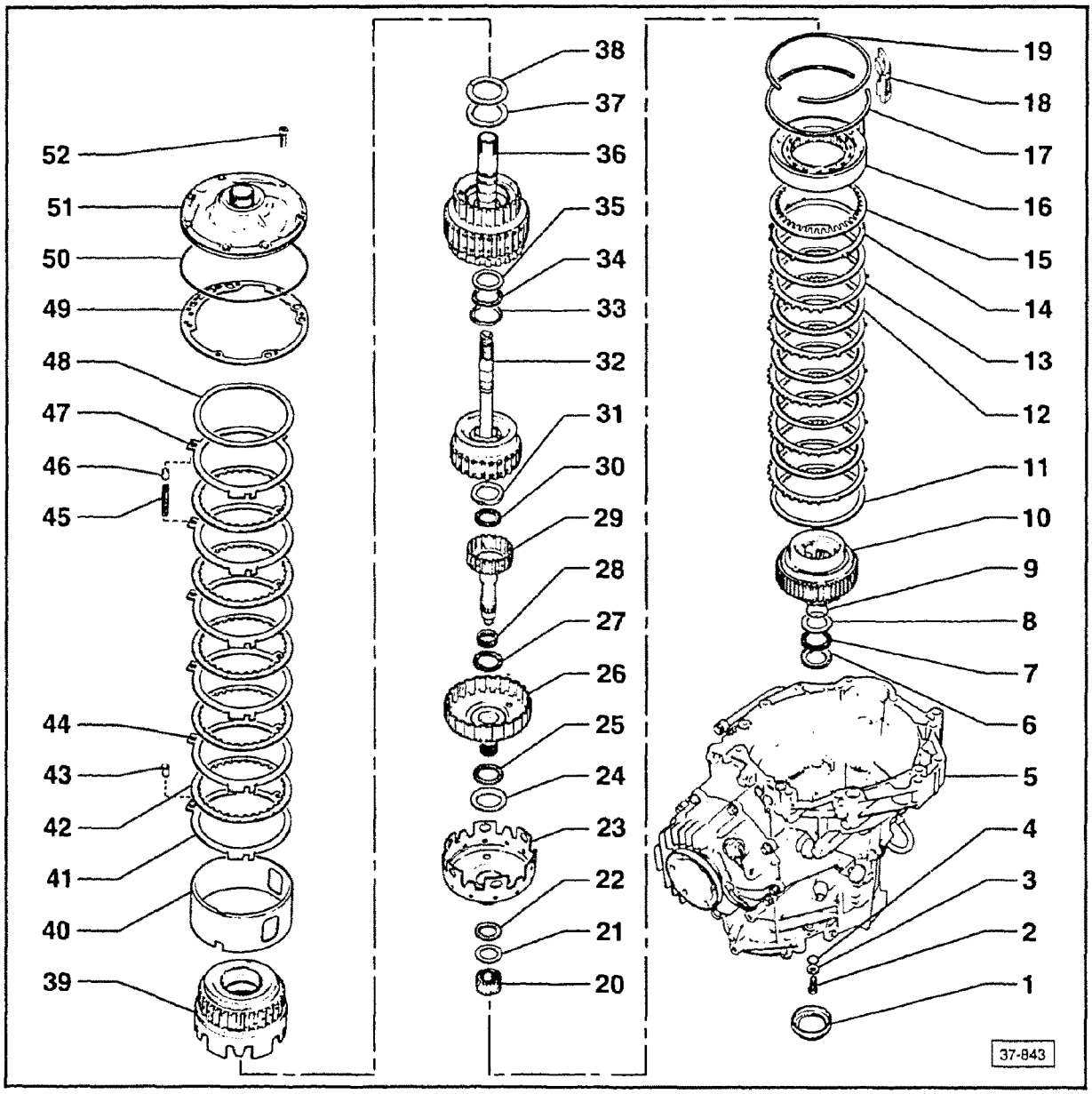

CAUTION

Before disassembling planetary gear set, remove valve body. See Repair Group 38.

1 — **End cover**
- pry out with screwdriver
- drive in with sleeve **40-20**

2 — **Bolt — 30 Nm (22 ft lb)**
for small driveshaft

3 — **Washer**

4 — **Shim**
- for planet carrier
- determining thickness, page 38.8
- adjusting planet carrier: remove drive gear, Repair Group 39

5 — **Transmission housing**
- valve body assembly, page 38.31
- disassembling/assembling pinion, Repair Group 39
- mounting in repair stand, page 38.5

6 — **Washer**
lugs toward axial needle bearing

7 — **Axial needle bearing**
install in planet carrier with washers

cardiagn.com

8 — **Washer**

9 — **O-ring**
- always replace
- install in planet carrier

10 — **Planet carrier**
- lightly grease washers and needle bearing
- place washers and needle bearing on planet carrier, then install planet carrier plates

11 — **Shim**
- for reverse gear brake (**B1**)
- determining thickness, page 38.10

12 — **Inner splined plate**
- number of plates, see Technical data, Repair Group 37
- before installing new plates, soak in ATF for 15 minutes

13 — **Outer splined plate**
number of plates, see Technical data, Repair Group 37

14 — **Pressure plate**
flat side toward plates

15 — **Plate spring**
curved side toward one-way clutch

16 — **One-way clutch**
- with **B1** piston
- assembly, page 38.18
- installing, page 38.6

17 — **Circlip**
- for one-way clutch
- after installing circlip, install oil deflector
- installed position, page 38.6

18 — **Oil deflector**
- seat in transmission housing groove (near ATF vent hole)
- install deflector **after** installing circlip for one-way clutch and **before** installing circlip for support tube

19 — **Circlip**
- for support tube
- before installing circlip, be sure one-way clutch and oil deflector are in place
- installed position, page 38.6

20 — **Sun gear, small**
install in planet carrier

21 — **Washer**
install with rounded side toward small sun gear

22 — **Axial needle bearing**

23 — **Sun gear, large**
install in planet carrier

24 — **Washer**
install with chamfered side in large sun gear

25 — **Axial needle bearing**

26 — **Driveshaft, large**
install in planet carrier

27 — **Axial needle bearing**

28 — **Needle bearing**

29 — **Driveshaft, small**
install in planet carrier

30 — **Axial needle bearing**
- washer may be integral with needle bearing
- bearing faces small driveshaft

31 — **Washer**
- lugs toward axial needle bearing
- washer may be integral with needle bearing

32 — **3rd/4th gear clutch (K3)**
- with pump shaft
- removing/installing, page 38.6
- assembly, page 38.27

33 — **Washer**
lugs toward axial needle bearing

34 — **Axial needle bearing**

35 — **Washer**

36 — **1st to 3rd gear clutch (K1)**
- with turbine shaft
- assembly, page 38.21

37 — **Shim**
- for **K1/K2** freeplay adjustment
- determining thickness, page 38.13

38 — **Shim**
- for **K1/K2** freeplay adjustment (if second shim is needed)
- determining thickness, page 38.13

39 — **Reverse clutch (K2)**
- installing, page 38.52
- assembly, page 38.25

40 — **Support tube**
- installing, page 38.6
- install so that groove engages in wedge of one-way clutch

41 — **Outer splined plate**
- number of plates, see Technical data, Repair Group 37
- always install 3 mm thick outer plate, page 38.5

42 — **Inner splined plate**
- number of plates, see Technical data, Repair Group 37
- before installing new plates, soak in ATF for 15 minutes
- installing, page 38.5

43 — **Spring cap**
- remove all three
- insert, after installing 1st outer splined plate

44 — **Outer splined plate**
- number of outer plates, see Technical data, Repair Group 37
- always install 2 mm thick outer plate, page 38.5

45 — **Spring**
- remove all three
- insert, before installing the last outer splined plate

46 — **Spring cap**
- remove all three
- insert, before installing the last outer splined plate

cardiagn.com

47 — **Outer splined plate**
- number of outer plates, see Technical data, Repair Group 37
- determining thickness of outer plates, page 38.15
- installing, page 38.5

48 — **Spring washer, wavy**

49 — **Gasket**
always replace

50 — **O-ring**
- always replace
- place on ATF pump

51 — **ATF pump**
- assembly, page 38.17
- removing/installing, page 38.5

52 — **10 Nm (7 ft lb)**

cardiagn.com

Transmission, disassembling/ assembling

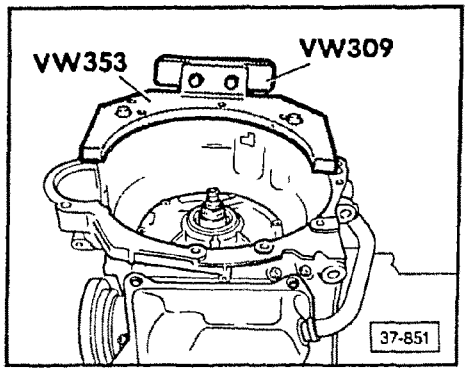

Mounting transmission in repair stand

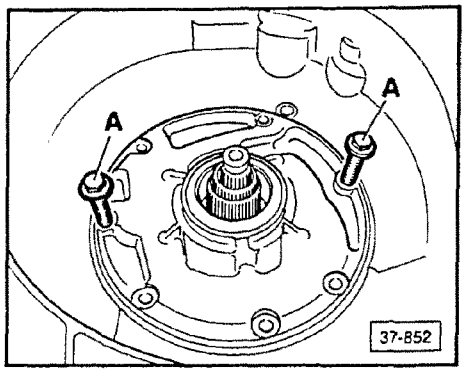

ATF pump, replacing

- extract pump from transmission housing by turning bolts **A**

Note

When installing pump, ensure that gasket is seated.

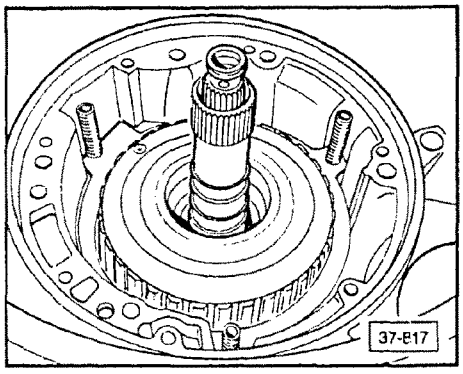

2nd/4th gear brake (B2) plates, replacing

- remove all plates, springs and caps, together with clutches
- install 3 mm outer plate
- install spring caps/springs (three each)
- install all inner plates and 2 mm outer plates (see illustration 37-843 for installation sequence)

Note

Before installing the last measured outer plate, place a spring cap over each of the three springs.

cardiagn.com

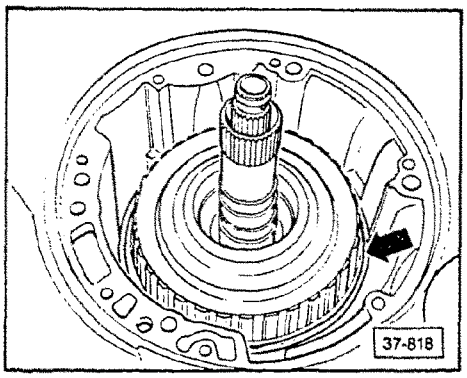

Reverse clutch (K2) and support tube, installing

- install reverse clutch on shims
- install support tube (**arrow**) so that groove engages in wedge of one-way clutch

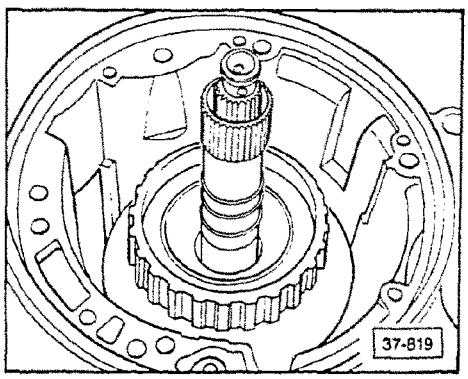

3rd/4th gear clutch (K3), installing

- assemble 1st to 3rd gear clutch (**K1**) and 3rd/4th gear clutch (**K3**) with washers and axial needle bearing (see illustration 37-843 for installation sequence)
- install assembly, altogether

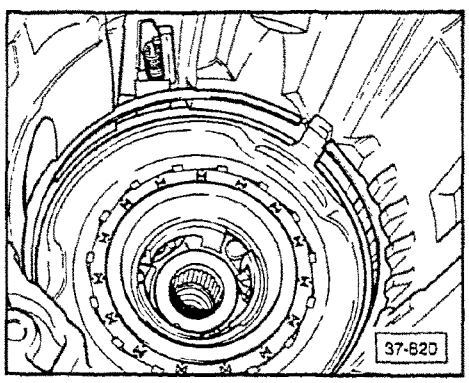

Circlip for one-way clutch (F) and circlip for support tube, installed position

Note

Install oil deflector **after** installing circlip for one-way clutch and **before** installing circlip for support tube

cardiagn.com

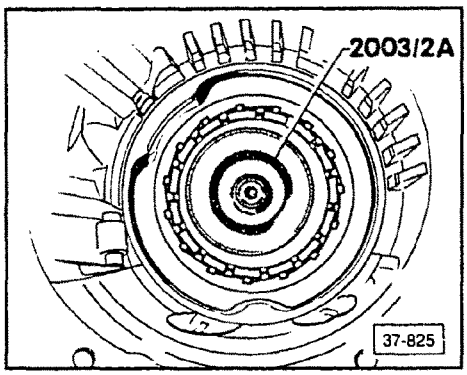

One-way clutch, installing

- position arbor **2003/2A** on planet carrier as shown
- press one-way clutch over arbor, onto planet carrier

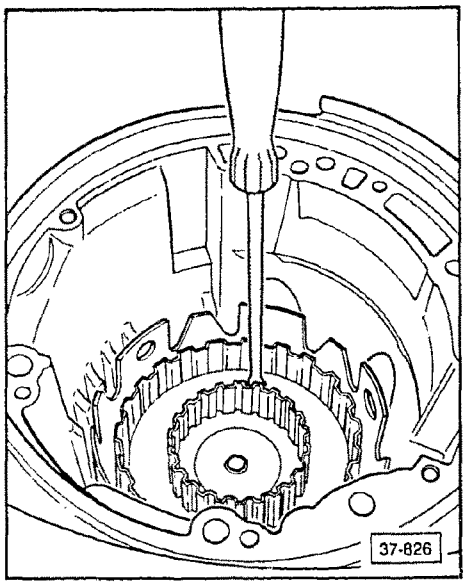

Bolt for small driveshaft, replacing

- bolt located in bore of driveshaft and large sun gear

cardiagn.com

Planet carrier, adjusting/checking

Note

The following components should already be assembled to the small driveshaft:

- planet carrier with washers and needle bearing
- small sun gear
- drive gear with axial needle bearing

Shim thickness, determining

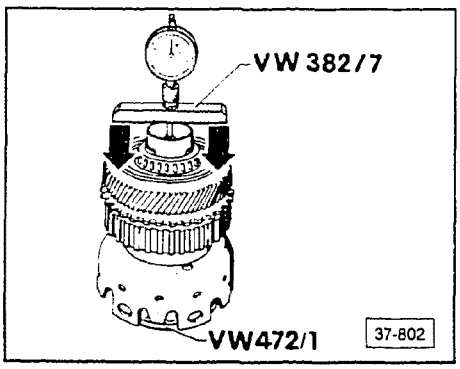

- set up measuring equipment as shown
  - dial indicator sensor must contact small driveshaft
- "zero" dial indicator, with 3 mm preload

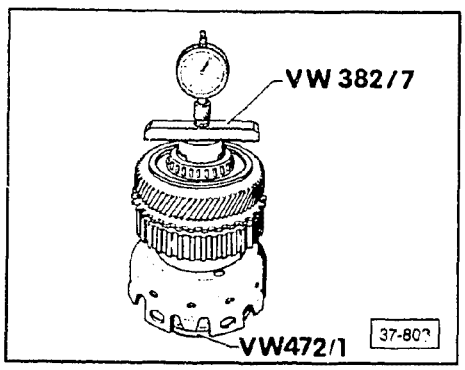

- reposition dial indicator sensor onto axial needle bearing
- record measurement
  - example: 2.00 mm
- use recorded measurement to select appropriate shim thickness from chart which follows:

cardiagn.com

Dial Gauge Measurement	Thickness Shim (mm)
1.26 ...1.35	1.0
1.36 ...1.45	1.1
1.46 ...1.55	1.2
1.56 ...1.65	1.3
1.66 ...1.75	1.4
1.76 ...1.85	1.5
1.86 ...1.95	1.6
1.96 ...2.05	1.7
2.06 ...2.15	1.8
2.16 ...2.25	1.9
2.26 ...2.35	2.0
2.36 ...2.45	2.1
2.46 ...2.55	2.2
2.56 ...2.65	2.3
2.66 ...2.75	2.4
2.76 ...2.85	2.5
2.86 ...2.95	2.6
2.96 ...3.05	2.7
3.06 ...3.15	2.8
3.16 ...3.25	2.9

Example

For a measurement of 2.00 mm, select a 1.7 mm shim.

Adjustment, checking

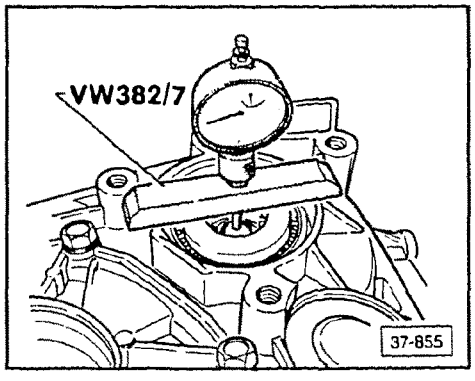

- set up measuring equipment, with dial indicator contacting small driveshaft bolt head
- move small shaft to upper/lower limits of travel
- measure freeplay
  - freeplay minimum: 0.23 mm
  - freeplay maximum: 0.37 mm

cardiagn.com

Reverse brake (B1), adjusting/ checking

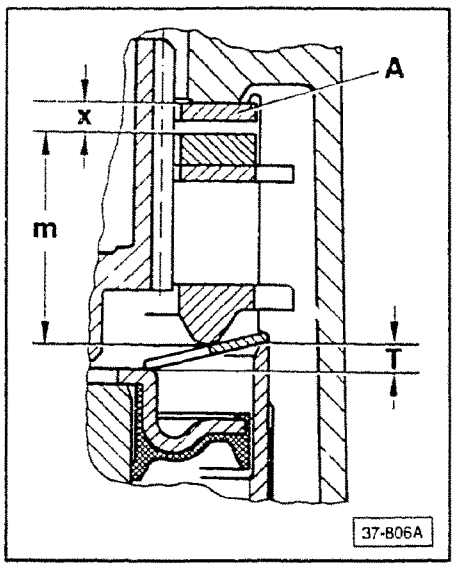

Shim thickness, determining

Note

A shim selection chart appears in this section. Thickness values in the chart are determined by the value of Gap **x**, which must be calculated in the following equation:

$$\text{Gap } \mathbf{x} = \mathbf{k} + \frac{\mathbf{T}}{2} - \mathbf{m}$$

k = constant value = 26.8 mm

K is determined per transmission housing and number of plates:

k=	No. of plates inner	outer
26.8	5	5
30.5	6	6

The remaining variables (**T, m**) in the equation are measured, as follows:

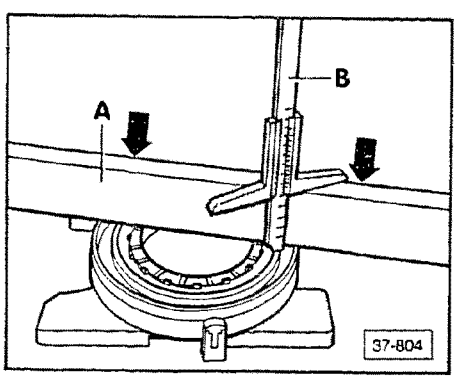

Variable T, determining

- place straightedge **A** on outer race of one-way clutch
- press piston in, to stop, in direction of **arrows**
- measure inner edge of piston with depth gauge **B**

Example

depth gauge reading	51.8 mm
– straightedge thickness	48.2 mm
	T = 3.6 mm

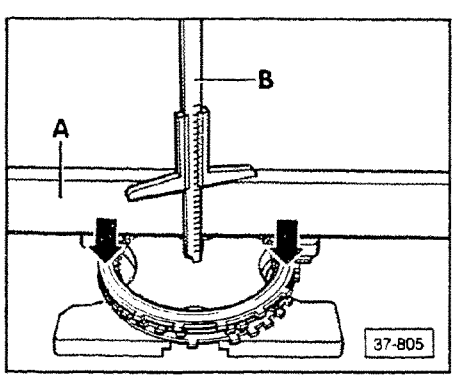

Variable m, determining

- place straightedge **A** on thrust plate
- press plates together in direction of **arrows**
- measure thickness of plate set using depth gauge **B**

Example

depth gauge reading	73.5 mm
– straightedge thickness	48.2 mm
	m = 25.3 mm

cardiagn.com

Value of Gap x, calculating

Example

$$\text{Gap } x = k + \frac{T}{2} - m$$
$$= 26.8 + \frac{3.6}{2} - 25.3$$
$$= 3.3 \text{ mm}$$

Note

Use calculated value for Gap **x** (derived from actual measurements) to select appropriate shim thickness(es):

Gap x (mm)	Shim (mm)
2.36 ...2.45	1.0
2.46 ...2.55	1.1
2.56 ...2.65	1.2
2.66 ...2.75	1.3
2.76 ...2.85	1.4
2.86 ...2.95	1.5
2.96 ...3.05	1.6
3.06 ...3.15	1.7
3.16 ...3.25	1.8
3.26 ...3.35	1.9
3.36 ...3.45	1 + 1
3.46 ...3.55	1 + 1.1
3.56 ...3.65	1.1 + 1.1
3.66 ...3.75	1.1 + 1.2
3.76 ...3.85	1.2 + 1.2
3.86 ...3.95	1.2 + 1.3
3.96 ...4.05	1.3 + 1.3
4.06 ...4.15	1.3 + 1.4
3.16 ...4.25	1.4 + 1.4

Adjustment, checking

Note

Ensure that components up to one-way clutch are properly assembled and secured with circlip.

cardiagn.com

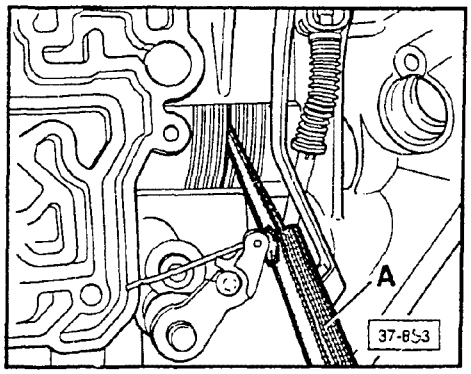

- measure freeplay between plates with feeler gauge **A**
  - freeplay minimum 1.20 mm
  - freeplay maximum 1.80 mm

cardiagn.com

Clutches K1 and K2, adjusting/ checking freeplay

Note

K1 = 1st to 3rd gear clutch

K2 = reverse gear clutch

Shim thickness, determining

Note

A shim selection chart appears in this section. Thickness values in the chart are determined by the value of Gap **x**, which must be calculated in the following equation:

Gap **x** = **y** − **z**

Variables **y** and **z** in the equation are measured as follows:

Variable y, determining

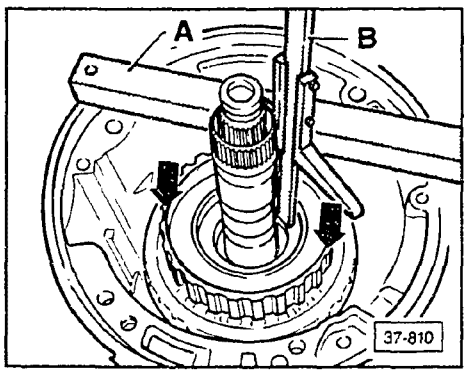

- place straightedge **A** on transmission housing
- press **K1** down, in direction of **arrows**
- measure into **K1** with depth gauge **B**

Example

depth measurement 1 = 88.5 mm

Note

Record value, and take depth measurement 2:

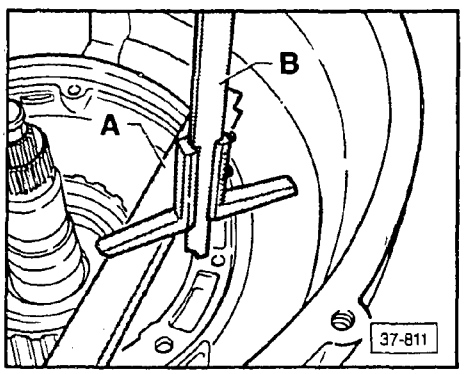

- place straightedge **A** on transmission housing
- position depth gauge **B** on striaghtedge **A** and measure to ATF pump flange

Example

depth measurement 2 = 34.3 mm

y = measurement 1 − measurement 2
= 88.5 mm − 34.3 mm
= 54.2 mm

measurement from pump flange into **K1**

cardiagn.com

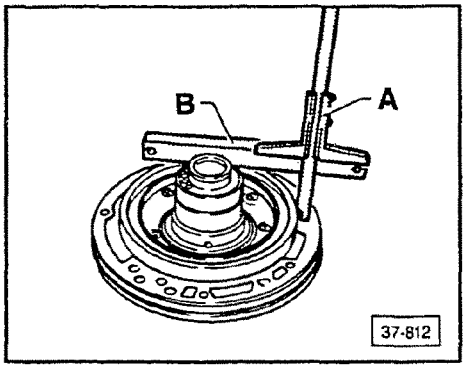

Variable z, determining

- place straightedge **B** on stator support as shown
- measure to pump flange gasket with depth gauge **A**

Example

depth gauge reading	70.5 mm
– straightedge thickness	19.5 mm
	z = 51.0 mm

Value of Gap x, calculating

Example

Gap **x** = **y** – **z**
= 54.2 mm – 51.0 mm
= 3.2 mm

Note

Use calculated value for Gap **x** (derived from actual measurements) to select appropriate shim thickness(es):

Gap x (mm)	Shims (mm)
. . . . 2.54	1.4
2.55 . . . . 3.09	1 + 1
3.10 . . . . 3.49	1.2 + 1.2
3.50 . . . . 3.89	1.4 + 1.4
3.90 . . . . 4.29	1.6 + 1.6
4.30 . . . . 4.69	1.8 + 1.8
4.70 . . . . 5.04	1.2 + 1.2 + 1.6
5.05 . . . . 5.25	1.2 + 1.2 + 1.8

Adjustment, checking

See Clutch adjustment, checking (page 38.16)

cardiagn.com

2nd/4th gear brake (B2), adjusting

Last outer splined plate, determining thickness

Note

A shim selection chart appears in this section. Thickness values in the chart are determined by the value of Gap **x**, which must be calculated in the following equation:

Gap **x** = **y** – **z** – **k**

k = constant value = 3.6

The remaining variables (**y**, **z**) in the equation are measured as follows:

Variable y, determining

- press inner splined plate (**arrows**) downward
- measure from pump flange **A** to last inner splined plate, using depth gauge **B**

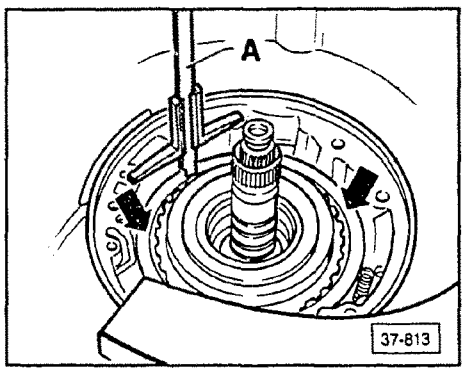

Example

gauge reading = variable **y** = 30.2 mm

Variable z, determining

- place straightedge **A** on stator support as shown
- measure to pump flange gasket with depth gauge **B**

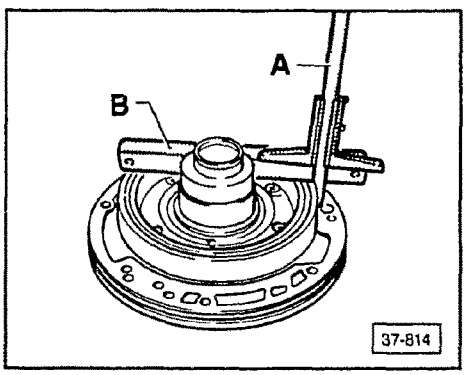

Example

depth gauge reading	40.1 mm
– straightedge thickness	19.5 mm
	z = 20.6 mm

Value of Gap x, calculating

Example

Gap **x** = **y** – **z** – **k**
= 30.2 – 20.6 – 3.6
= 6.0 mm

cardiagn.com

Note

Use calculated value for Gap **x** (derived from actual measurements) to select appropriate plate thickness(es):

Gap x (mm)	Plate (mm)
4.25. . . . 4.49	2.75
4.50. . . . 4.74	3.00
4.75. . . . 4.99	3.25
5.00. . . . 5.24	3.50
5.25. . . . 5.49	3.75
5.50. . . . 5.74	2.00 + 2.00
5.75. . . . 5.99	2.00 + 2.25
6.00. . . . 6.24	2.25 + 2.25
6.25. . . . 6.49	2.25 + 2.50
6.50. . . . 6.74	2.50 + 2.50
6.75. . . . 7.00	2.50 + 2.75

Clutch adjustment, checking

Note

Install ATF pump before measuring clutch freeplay.

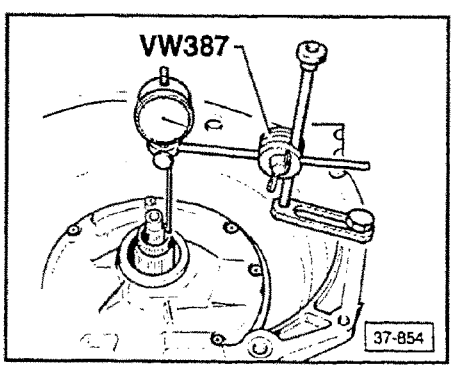

- secure dial indicator holder **VW 387** to transmission housing
- position dial indicator sensor on turbine shaft, with 1 mm preload
- move turbine shaft to upper/lower limits of travel
  - freeplay minimum 0.5 mm
  - freeplay maximum 1.2 mm

cardiagn.com

THIS FRAME INTENTIONALLY LEFT

BLANK

cardiagn.com

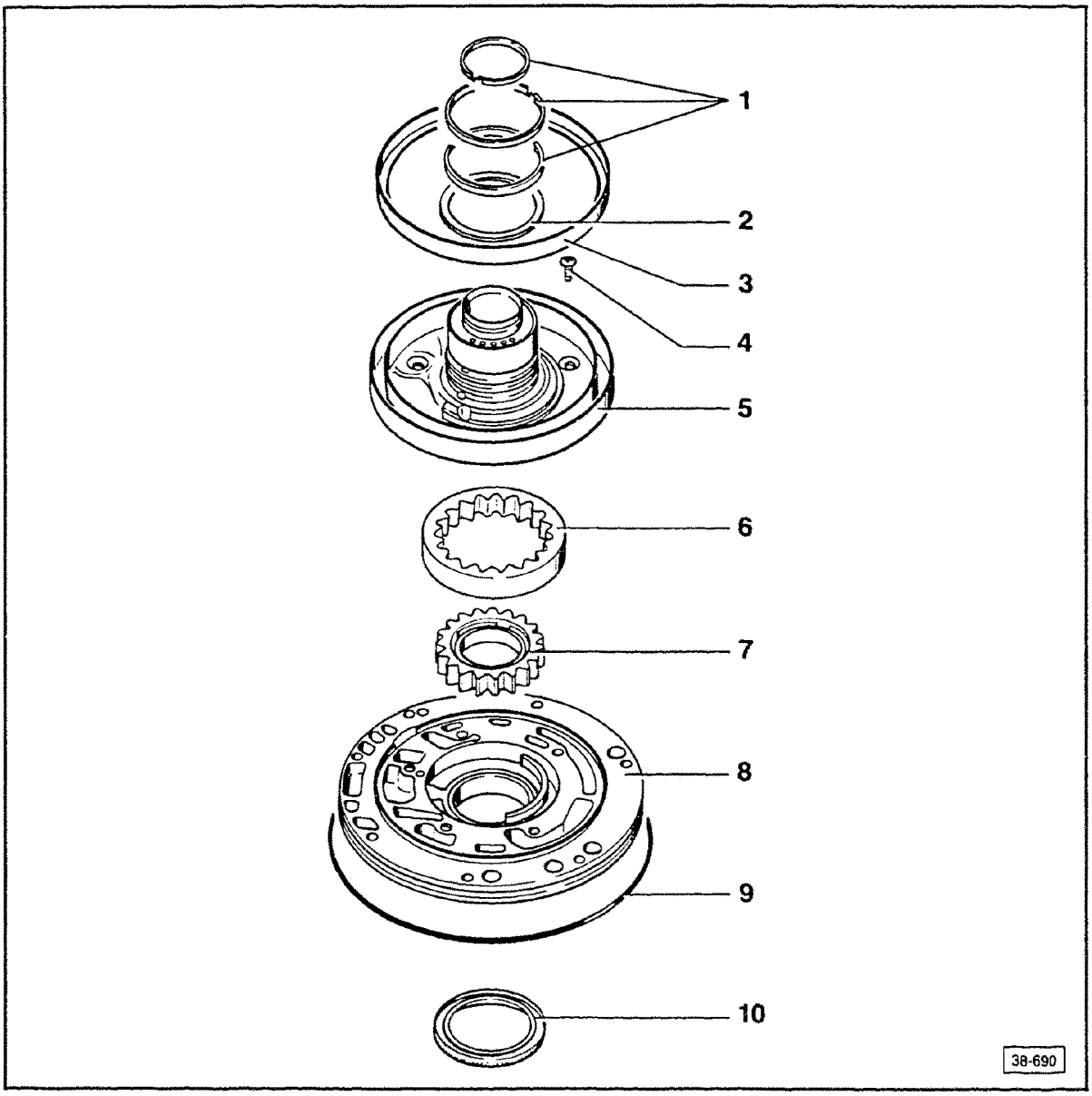

1 — **Piston rings**
check for proper seating

2 — **Thrust washer**

3 — **Piston**
- coat sealing lips with ATF before installing piston
- turn piston slightly while installing

4 — **10 Nm (7 ft lb)**

5 — **Stator support**

6 — **Outer gear**
- coat with ATF before installing
- marked side must face stator support
- if installed incorrectly, pump may turn stiffly

7 — **Inner gear**
coat with ATF before installing

8 — **ATF pump housing**

9 — **O-ring**
always replace

10 — **Oil seal for torque converter**
removing/installing, see Repair Group 32

cardiagn.com

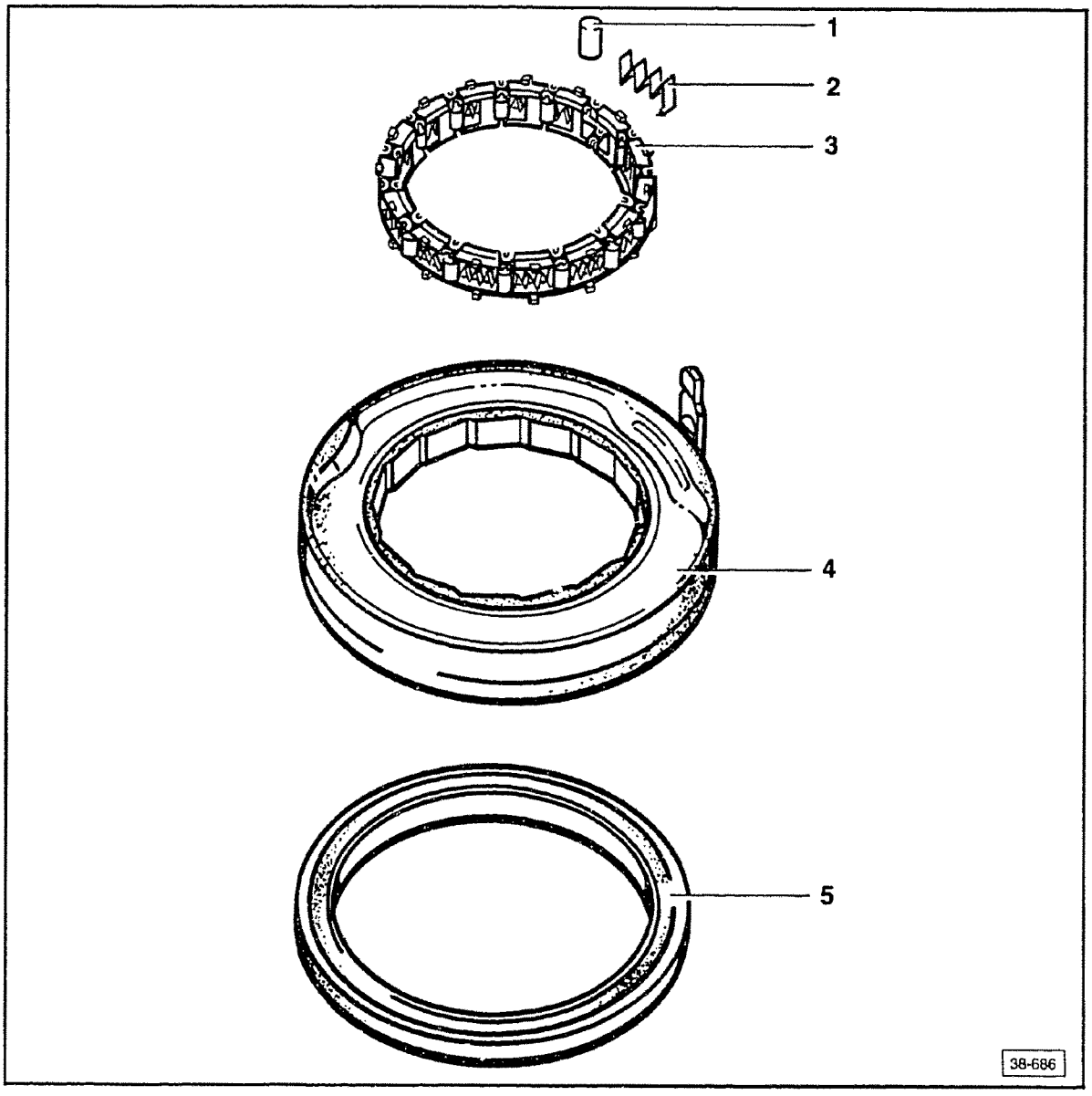

1 — **Rollers**
installing, page 38.19

2 — **Springs**
installing, page 38.19

3 — **Cage**
installing/securing, page 38.19

4 — **Outer ring**

5 — **Piston**
- coat sealing lips with ATF before installing piston
- turn piston slightly while installing
- installed position, page 38.20

cardiagn.com

One-way clutch with B1 piston, disassembling/assembling

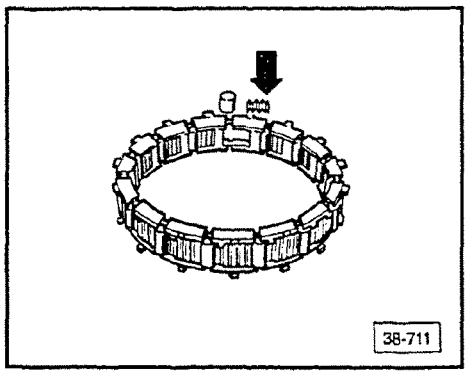

Springs/rollers, installing

- install spring (**arrow**) so that it seats in cage

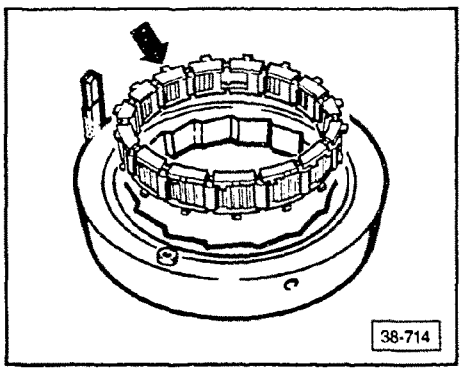

Spring/roller cage assembly, installing

- install with lugs (**arrow**) upward

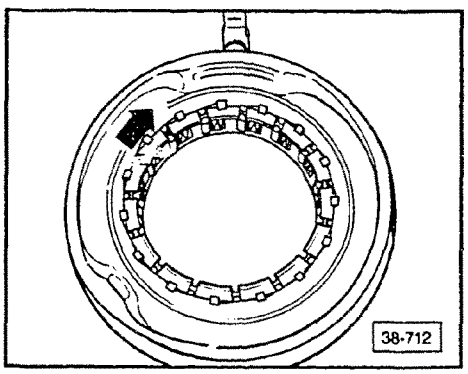

Cage assembly, securing

- turn cage in direction of **arrow**, to stop

cardiagn.com

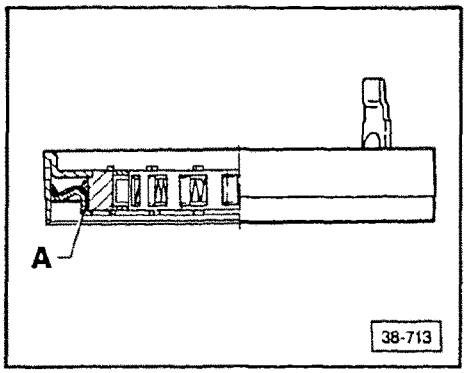

Piston, installed position

- install piston **A** as shown

cardiagn.com

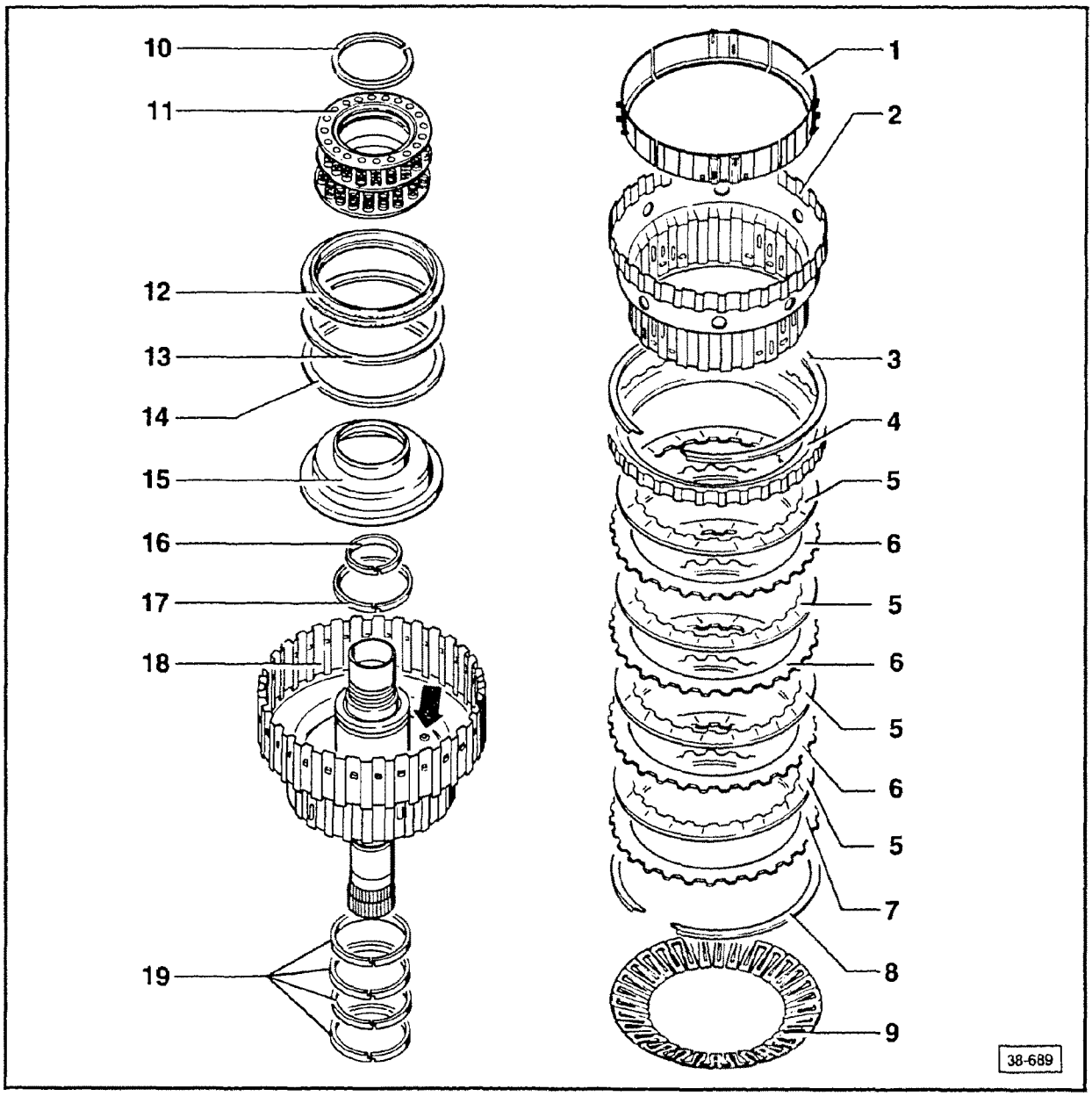

CAUTION

During clutch repair, inspect ball valve (**arrow**) for damage.

1 — **Support ring**
- has four segments
- unclip from inner splined plate carrier
- installing, page 38.24

2 — **Inner splined plate carrier**
assembling, page 38.24

3 — **Circlip**
- *mark after removal and install in same position*
- different thicknesses available
- removing/installing, page 38.24

4 — **Thrust plate**
- smooth side faces inner plates
- install together with inner plate carrier

5 — **Inner splined plate**
- number of plates, see Technical data, Repair Group 37
- installing, page 38.24

cardiagn.com

6 — **Outer splined plate**
- number of plates, see Technical data, Repair Group 37
- installing, page 38.24

7 — **Thrust plate**
curved side faces diaphragm spring

8 — **Circlip**
removing/installing, page 38.23

9 — **Diaphragm spring**
curved side faces piston

10 — **Circlip**
removing/installing, page 38.23

11 — **Spring intermediate ring assembly**
with guide for compression springs

12 — **Operating ring**
rounded surface faces spring intermediate ring assembly

13 — **Plate spring**
- curved side faces operating ring
- installing, page 38.23

14 — **Plate spring**
- curved side faces piston
- installing, page 38.23

15 — **Piston**
- coat sealing lips with ATF before installing piston
- turn piston slightly while installing

16 — **Piston ring, smaller**
to remove, unhook ends

17 — **Piston ring, larger**
to remove, unhook ends

18 — **Clutch drum with turbine shaft**
- replace drum if bushings are damaged
- before installing inner plate carrier, place an inner and outer plate in clutch drum
- assembling, page 38.24

19 — **Piston rings**
to remove, unhook ends

cardiagn.com

1st to 3rd gear clutch (K1) with turbine shaft, disassembling/ assembling

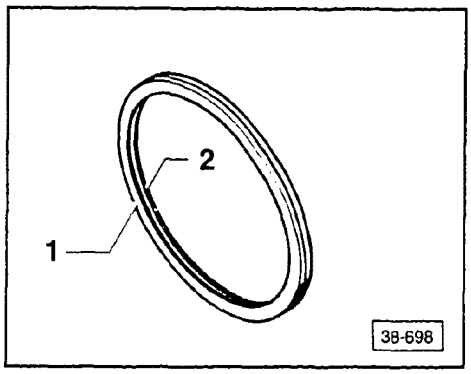

Plate springs, installing

- install plate springs **1** and **2** so that outer edges make contact
  - at inner diameter of plates there is clearance

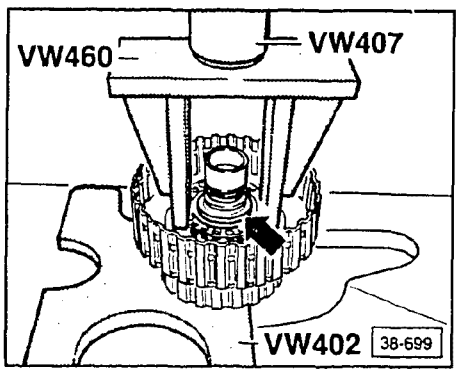

Circlip at spring intermediate ring assembly, removing/installing

- set up pressing equipment as shown
- push spring intermediate ring downward until circlip (**arrow**) can be seated/unseated at groove

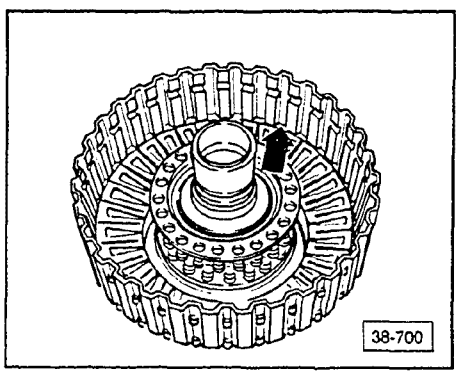

Circlip at diaphragm spring, removing/ installing

- seat/unseat circlip (**arrow**) at groove

Note

Diaphragm spring is slightly preloaded.

cardiagn.com

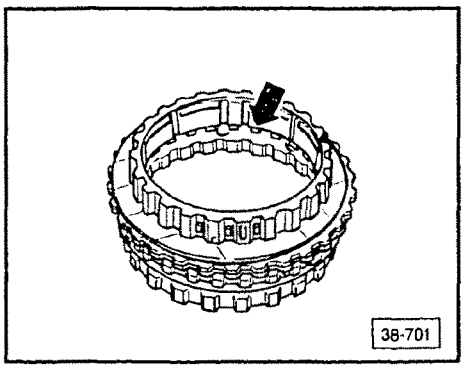

Inner splined plate carrier, assembling

- install thrust plate
- install inner and outer plates
- clip support ring to carrier

Note

One inner and one outer plate must be placed in clutch drum before inner splined plate carrier is installed (see below).

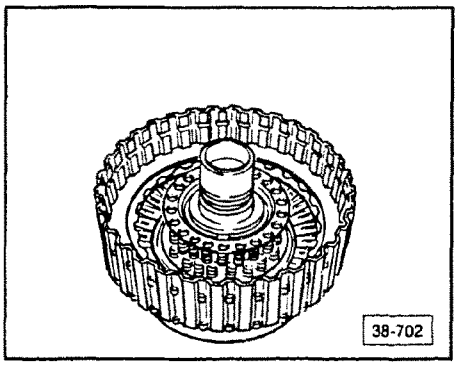

Clutch drum, assembling

- install thrust plate
- install one inner plate
- install one outer plate

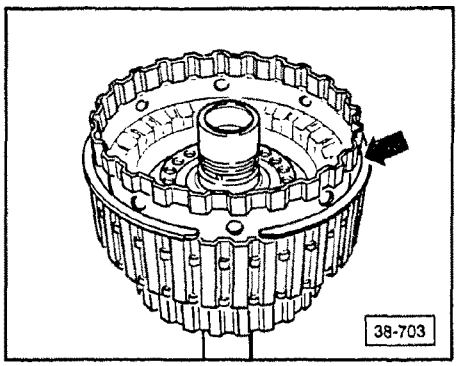

Circlip at inner splined plate carrier, removing/installing

- seat/unseat circlup (**arrow**) at groove

cardiagn.com

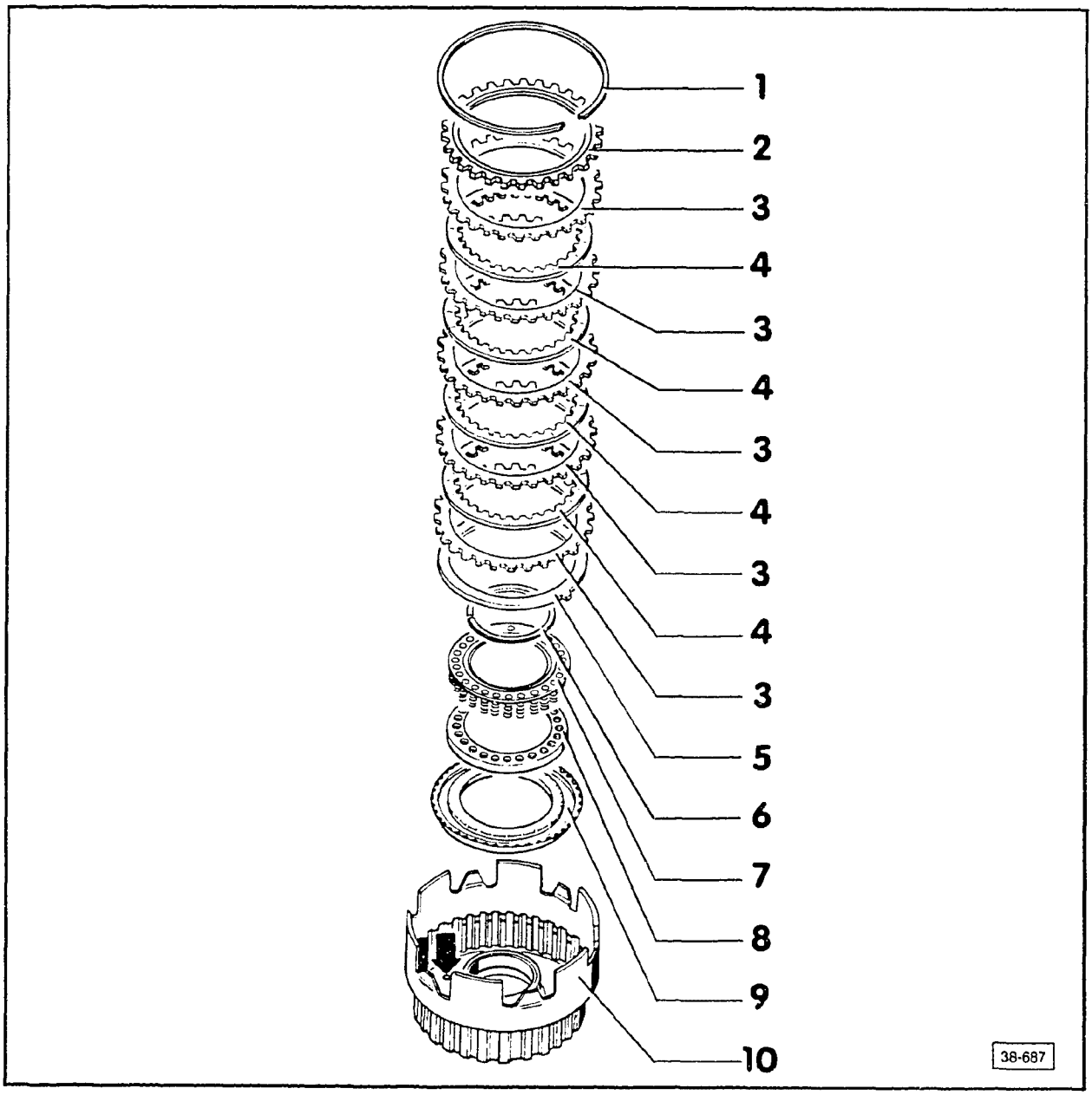

CAUTION

During clutch repair, inspect ball valve (**arrow**) for damage.

1 — **Circlip**
- mark after removal and install in same position
- different thicknesses available

2 — **Thrust plate**
shouldered side faces circlip

3 — **Outer plate**
number of plates, see Technical data, Repair Group 37

4 — **Inner plate**
number of plates, see Technical data, Repair Group 37

5 — **Spring washer, wavy**

6 — **Circlip**
removing/installing, page 38.26

7 — **Spring support plate**
- with springs
- installed position, page 38.26

8 — **Spring support ring**

9 — **Piston**
- coat sealing lips with ATF before installing piston
- turn piston slightly while installing

10 — **Clutch drum with clutch tube**

cardiagn.com

Circlip for reverse clutch (K2) spring support assembly, replacing

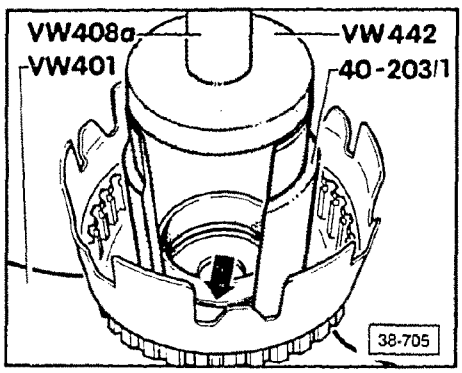

Removing

- set up pressing equipment as shown
- push spring support plate downward

> **CAUTION**
>
> Spring plate bends easily.

- spread/remove circlip

Installing

- position new circlip
- press new circlip down carefully with spring support plate, as in removal
- seat circlip in groove at clutch drum

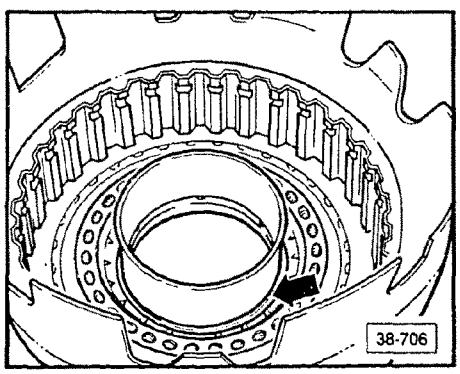

Installed position, checking

- check that circlip (**arrow**) is fully seated at clutch drum
- check that spring support plate is concentric with hub
  - if not, plate will bend

cardiagn.com

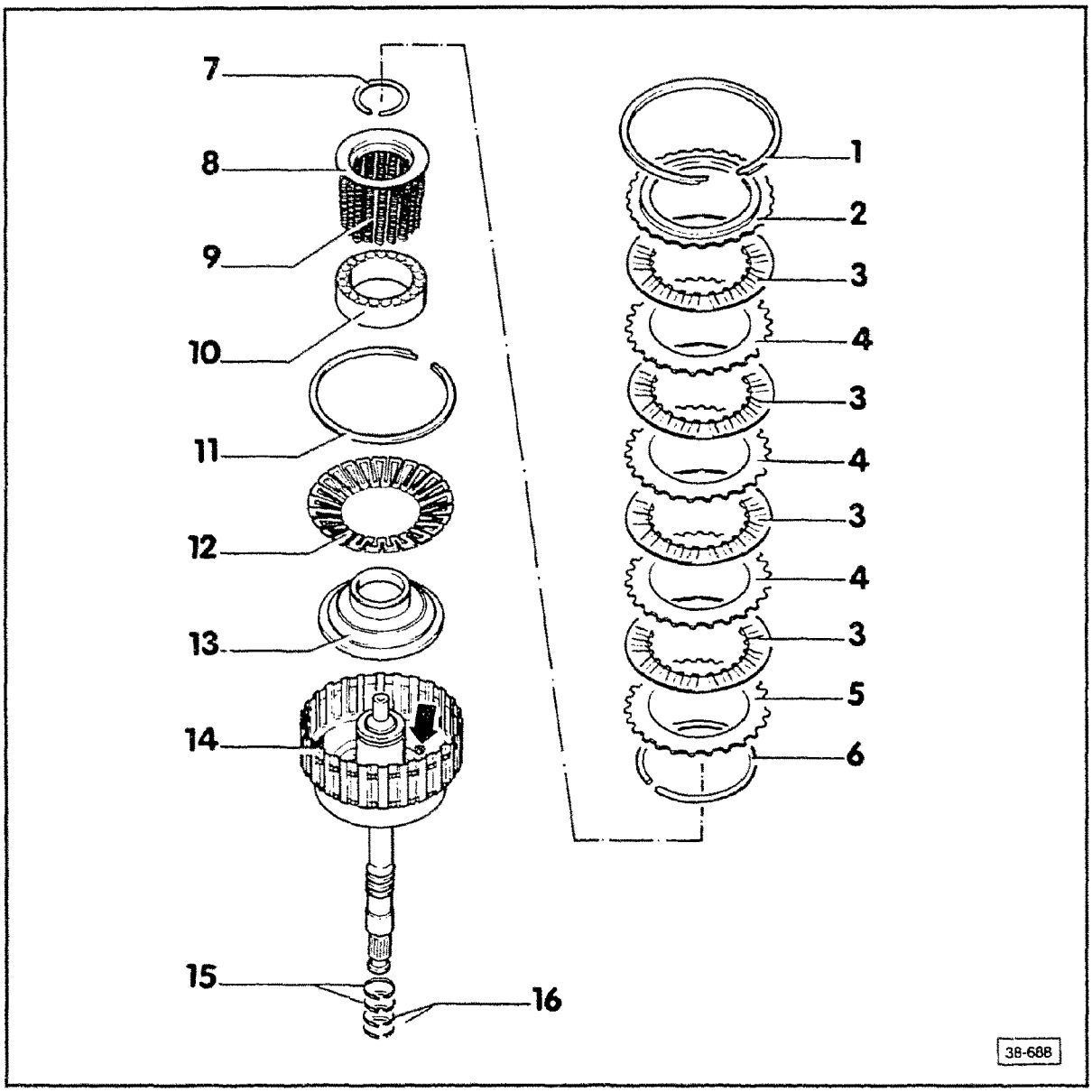

CAUTION

During clutch repair, inspect ball valve (**arrow**) for damage.

1 — **Circlip**
- mark after removal and install in same position
- different thicknesses available

2 — **Pressure plate**
shouldered side faces circlip

3 — **Inner plate**
number of plates, see Technical data, Repair Group 37

4 — **Outer plate**
number of plates, see Technical data, Repair Group 37

5 — **Thrust plate**
rounded side faces ring

6 — **Ring**
install in rounded side of thrust plate

7 — **Circlip**
replacing, page 38.29

8 — **Spring support ring**

9 — **Springs**
place on support ring

cardiagn.com

10 — Spring support plate

11 — Circlip
seat in grove at clutch drum

12 — Diaphragm spring
curved side faces piston

13 — Piston
- coat sealing lips with ATF before installing piston
- turn piston slightly while installing

14 — Clutch drum with pump shaft

15 — Piston rings
- remove/replace only if defective
- are destroyed during removal

16 — Piston rings
to remove, unhook ends

cardiagn.com

Circlip for 3rd/4th gear clutch (K3) spring support assembly, replacing

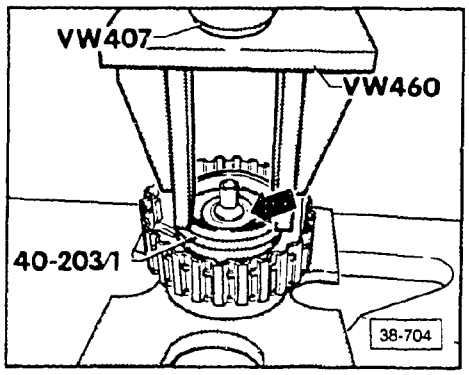

- set up pressing equipment as shown
- seat new circlip at spring support assembly (**arrow**)

cardiagn.com

intentionally
left blank

cardiagn.com

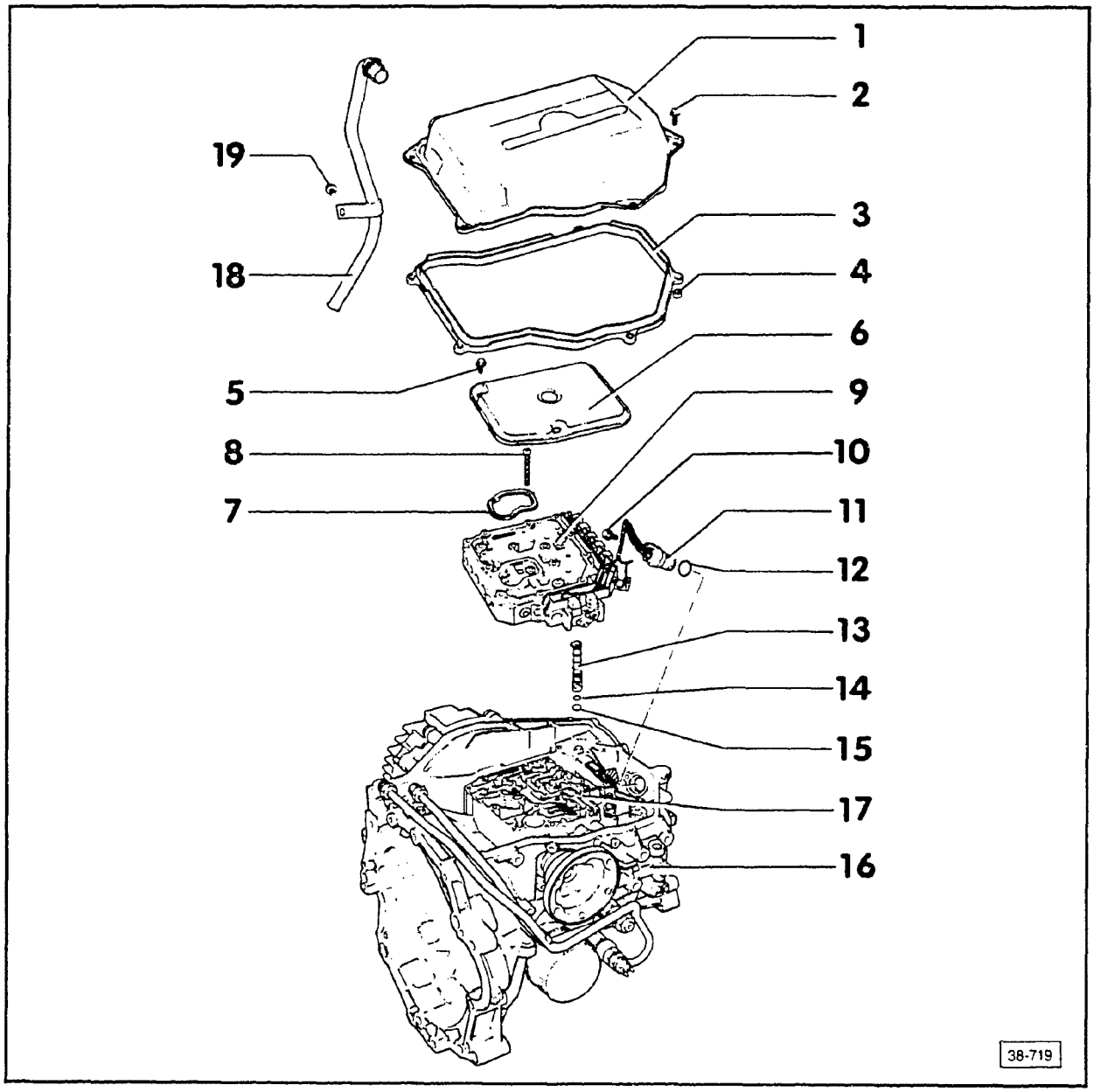

Note

The valve body can be removed with transmission in vehicle. Replace valve body if unit is contaminated or defective.

After installing oil pan, refill with ATF to specifications.

> **CAUTION**
>
> *Do not run engine or tow vehicle with oil pan removed, or without oil in transmission.*

1 — Oil pan
remove ATF filler tube before removing oil pan

2 — 10 Nm (7 ft lb)

3 — Gasket
- always replace
- press spacer into gasket

4 — Spacer
press into gasket

5 — Oil strainer
- seat seal
- installed position, page 38.33

6 — Valve body
- installed position, page 38.34
- identifying, page 38.33

cardiagn.com

7 — **10 Nm (7 ft lb)**

8 — **Wiring connector**
install with O-ring

9 — **O-ring**
always replace

10 — **Sealing plug**
- remove plug before removing/installing one-way clutch
- *installing, page 38.34*

11 — **O-ring**
always replace

12 — **O-ring**
always replace

13 — **Operating rod for manual valve**
- positioning, page 38.34
- shouldered side faces manual valve

14 — **Final drive housing**

15 — **Seal**
- always replace
- seat in oil strainer

16 — **5 Nm (44 in. lb or 51 cm kg)**

17 — **8 Nm (71 in. lb or 82 cm kg)**

18 — **ATF filler tube**
tightening torque at oil pan: **80 Nm (59 ft lb)**

19 — **10 Nm (7 ft lb)**

cardiagn.com

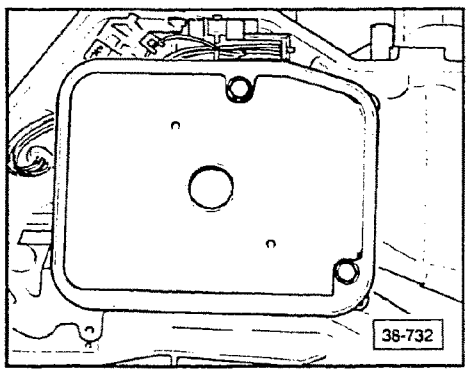

Oil strainer, installed position

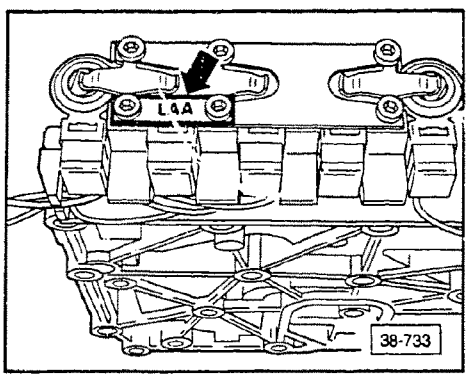

Valve body, identifying

Note

Code letters are stamped on a metal tag which must remain attached to the valve body.

For valve body application, see Technical data in Repair Group 37.

cardiagn.com

Valve body, disassembling/assembling

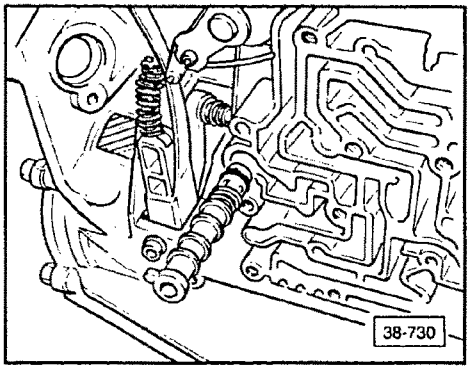

Sealing plug, installing

- install O-rings on plug
- install plug so that lug seats in groove on housing

CAUTION

Before removing/installing one-way clutch, remove sealing plug from housing to avoid damage to plug and O-ring.

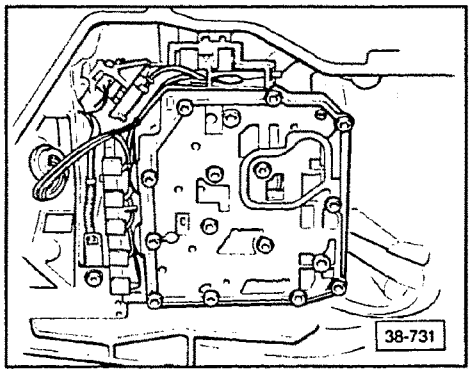

Valve body, installed position

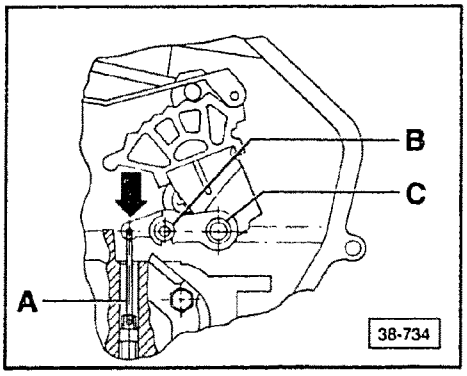

Manual valve assembly, installing

- move shaft to selector lever position **P**
- install manual valve assembly fully into valve body
  - operating rod **A** positioned in direction of **arrow**
- tighten stop screw **B** to 4 Nm (35 in. lb or 41 cm kg)

CAUTION

The manual valve lever **C** must remain against stop screw **B** during installation. When tightening screw **B** at manual valve lever **C**, counter-hold lever in direction of **arrow**.

cardiagn.com

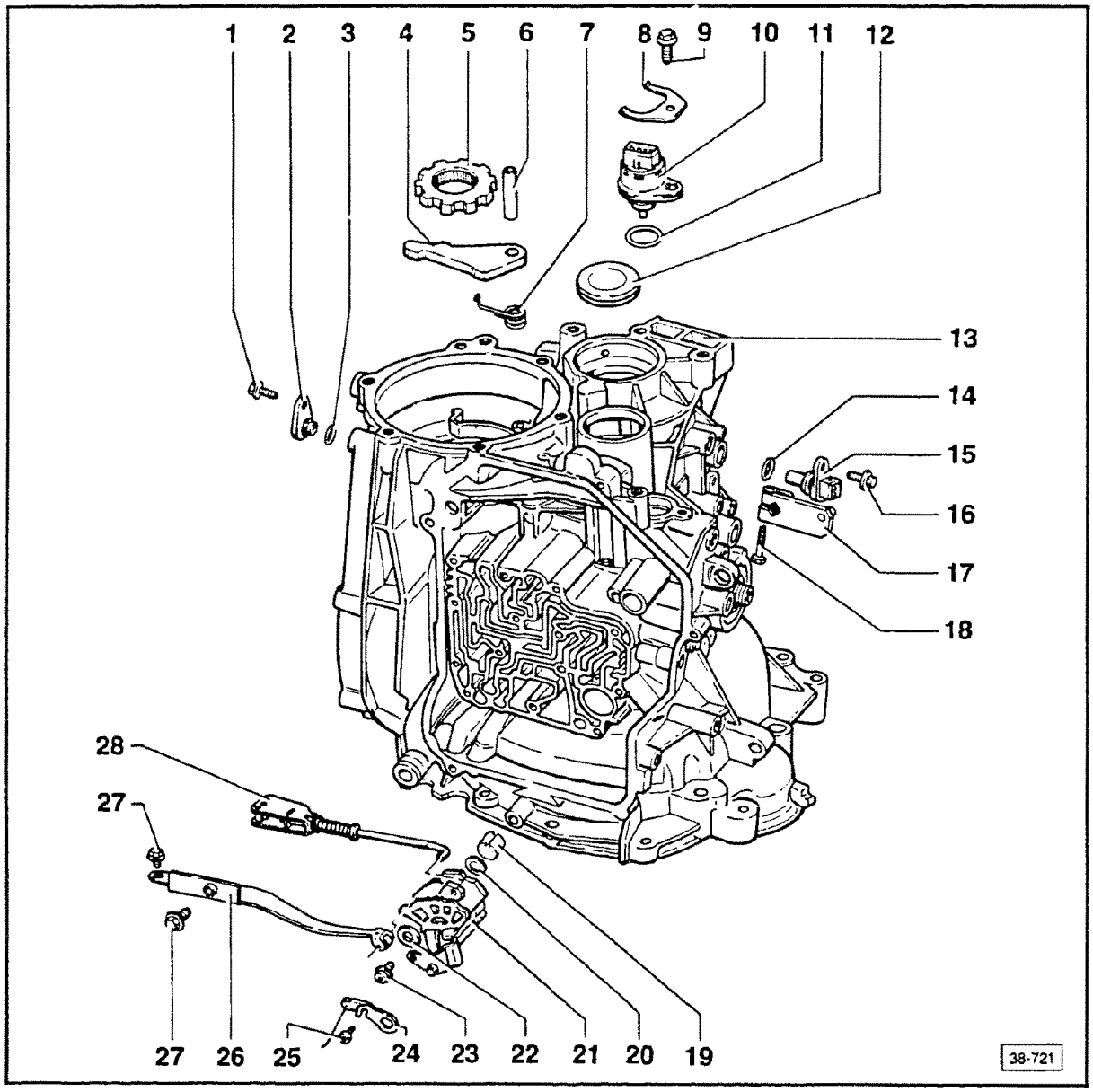

1 — **10 Nm (7 ft lb)**

2 — **Sealing plug**
installing, page 38.38

3 — **O-ring**
always replace

4 — **Parking pawl**
- install with return spring
- align with parking lock gear

5 — **Parking lock gear**
rounded side faces pinion cover

6 — **Pin for parking pawl**
- removing, page 38.37
- drive in with mandrel
- staking, page 38.37

7 — **Return spring**

8 — **Retainer**
for multi-function switch

9 — **10 Nm (7 ft lb)**

10 — **Multi-function switch (F125)**

11 — **O-ring**
always replace

cardiagn.com

12 — Cap

13 — Final drive housing

14 — O-ring
always replace

15 — Speed sensor

16 — 10 Nm (7 ft lb)

17 — Lever for gear change shaft

18 — 10 Nm (7 ft lb)

19 — Bushing
remove/install with mandrel

20 — O-ring
- always replace
- seat in groove of gear change shaft
- installed position, page 38.37

21 — Gear change shaft assembly
- before withdrawing shaft, remove multi-function switch and lock spring
- securing, page 38.37
- always install with lever

22 — Lock washer
installed position, page 38.37

23 — 10 Nm (7 ft lb)

24 — Manual valve lever

25 — 4 Nm (35 in. lb or 41 cm kg)

26 — Lock spring
installation sequence for bolts, page 38.37

27 — 10 Nm (7 ft lb)
installing, page 38.37

28 — Lever

cardiagn.com

Parking lock, disassembling/ assembling

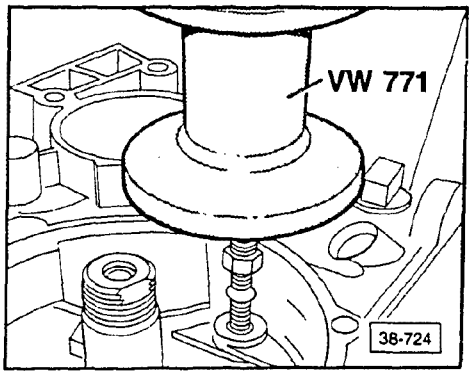

Pin for parking pawl, removing

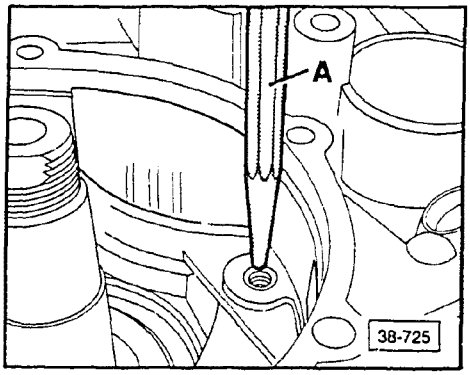

Pin for parking pawl, staking

- secure pin by staking with punch **A** at final drive housing

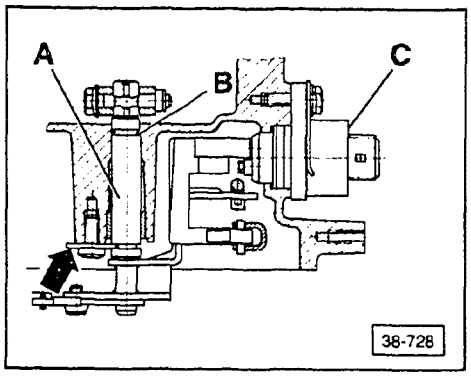

Gear change shaft assembly, installed position

A — gear change shaft
B — O-ring
C — multi-function switch (**F125**)

Note

Shaft is held stationary by lock washer (**arrow**).

cardiagn.com

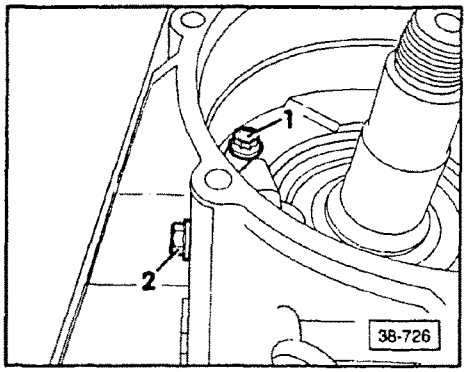

Bolts for lock spring, installation sequence

- start both bolts into housing
  - approximately 3 threads
- tighten bolt **2** to 10 Nm (7 ft lb)
- tighten bolt **1** to 10 Nm (7 ft lb)

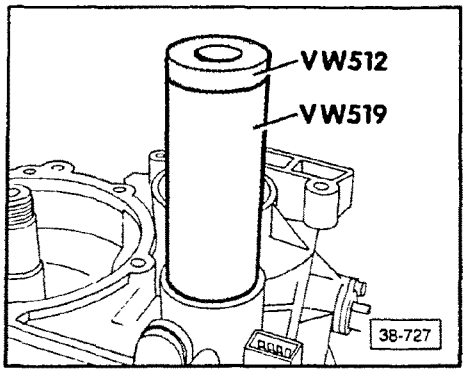

Sealing plug, installing

cardiagn.com

Index

097 4-speed Automatic

Axle flange oil seal
- removing/installing (transmission installed) **39.2**
- installing (transmission removed) **39.7**

Differential
- assembly **39.4, 39.18**
- disassembling/assembling **39.20**

Final drive
- shim/bearing positions **39.22**

Output gear
- assembly **39.8**
- removing/installing **39.10**

Pinion
- assembly **39.12**
- removing/installing **39.14**

Final drive
- adjustment overview **39.24**
- shim positions **39.31**

Output gear
- adjusting **39.25**
- bearing turning torque **39.28**

Pinion shaft
- adjusting **39.32**
- drive gear bearing turning torque **39.35**

Ring gear
- adjusting **39.41**
- backlash, determining **39.44**
- backlash, checking **39.47**

Ring gear/pinion
- adjusting **39.29**
- identifying **39.29**

cardiagn.com

Axle flange oil seal, removing/ installing (transmission installed)

Removing (right side)

- remove axle shaft from axle flange
- remove axle flange lock ring
- position drain pan under vehicle
- remove axle flange using puller **A**, **Kukko 18/1**

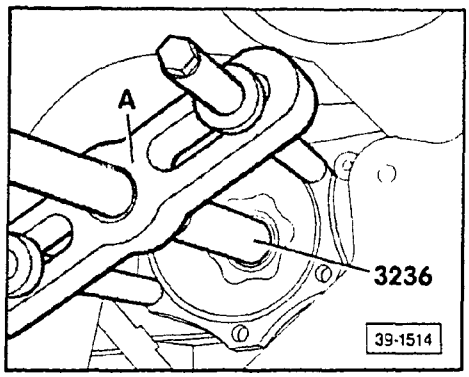

- remove oil seal, using extractor lever **VW 681**

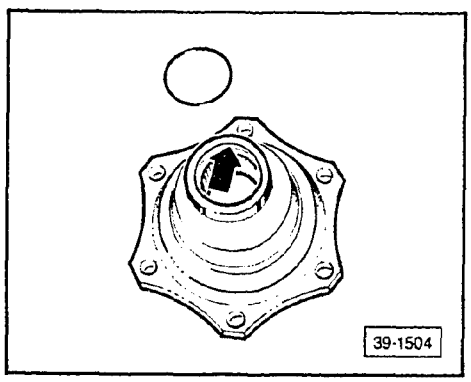

- remove O-ring from axle flange (**arrow**)

Installing (right side)

- drive new oil seal in, up to stop
  - fill space between seal and lip with multi-purpose grease
- install new O-ring

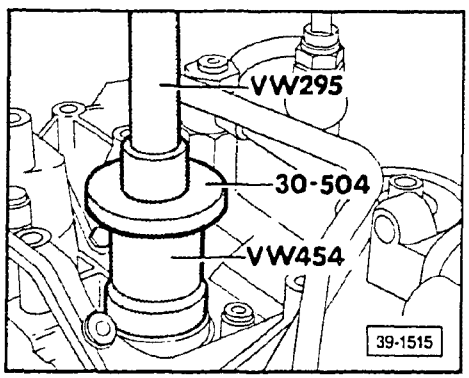

cardiagn.com

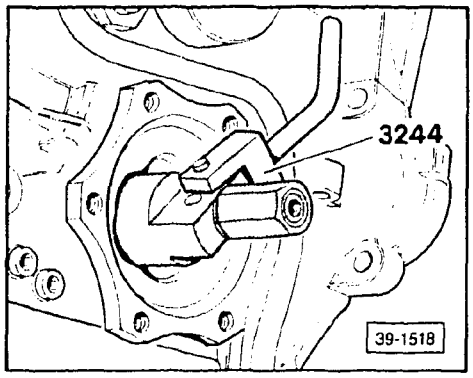

- install axle flange to differential shaft
- install axle flange lock ring
- install axle shaft to axle flange
- refill transmission oil, to specifications

Tightening torque (right side)

Axle shaft to axle flange	80 Nm (59 ft lb)

Removing (left side)

- remove axle shaft from axle flange
- remove axle flange bolt
- position oil pan under vehicle
- remove axle flange
- remove oil seal, using extractor lever **VW 681**

Installing (left side)

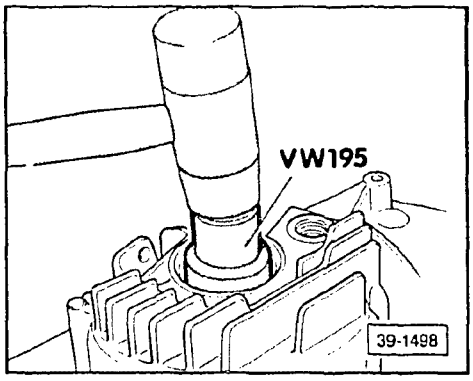

- drive new oil seal in, up to stop, with arbor **VW 195**
  - fill space between seal and lips with multi-purpose grease
- install axle flange
- install axle flange bolt
- install axle shaft to axle flange
- refill transmission oil to specifications

Tightening torques (left side)

Axle flange to transmission	25 Nm (18 ft lb)
Axle shaft to axle flange	80 Nm (59 ft lb)

cardiagn.com

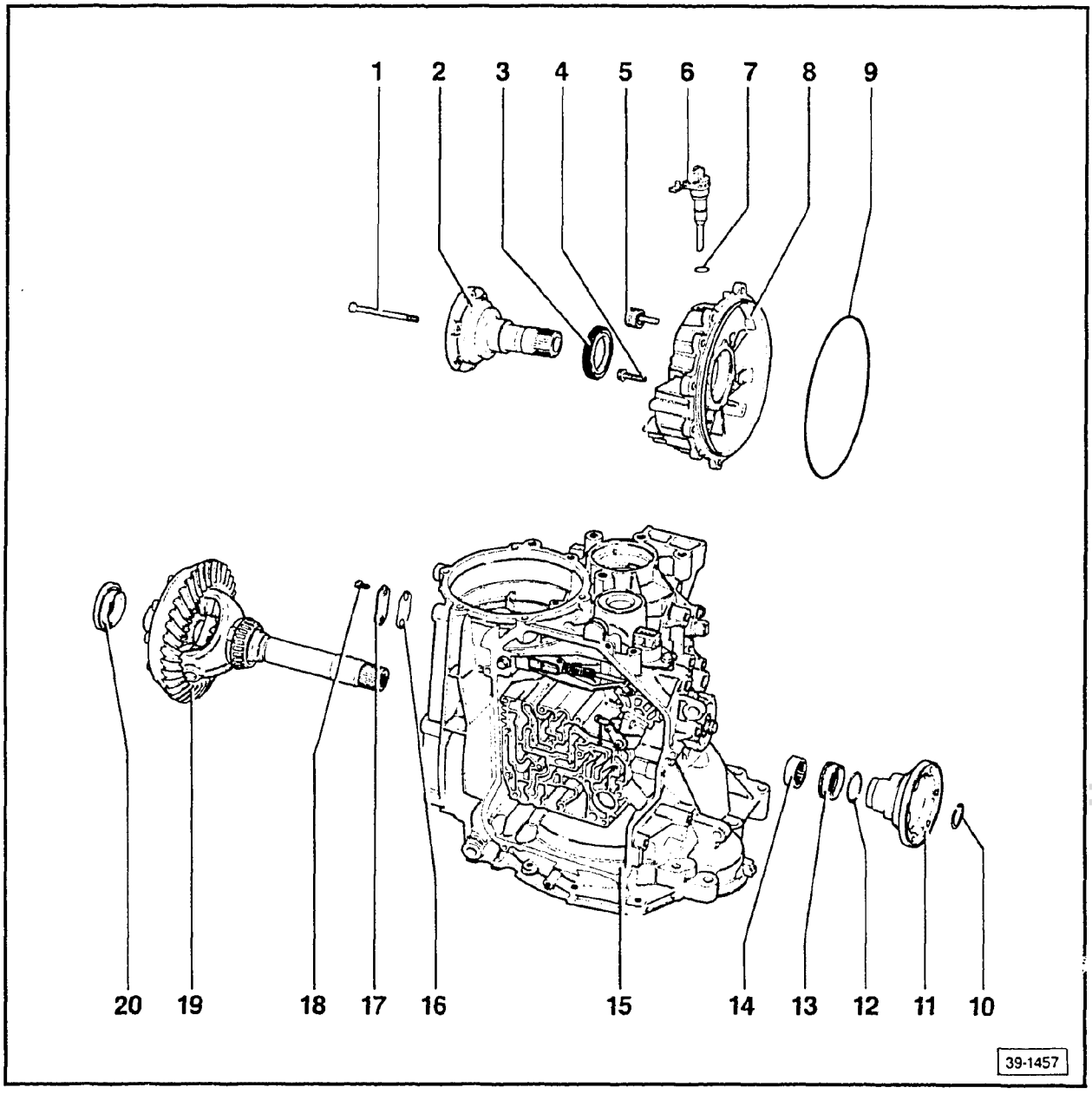

Note

If ring gear pinion and bearings are being reused, it is necessary to measure backlash (page 39.44) and pinion turning torque (page 39.35) **before** disassembling final drive. Note these measurements and adjust during reassembly, to obtain same settings.

CAUTION

If speedometer drive is dropped during assembly, damage could affect accuracy.

1 — **25 Nm (18 ft lb)**

2 — **Axle flange (left side)**

3 — **Axle flange oil seal**
removing/installing, page 39.2

4 — **25 Nm (18 ft lb)**

5 — **ATF filler plug**

6 — **Speedometer drive**

7 — **O-ring**
always replace

8 — **Final drive cover**
when replacing cover, readjust ring gear

cardiagn.com

9 — **Seal**
always replace

10 — **Lock ring for axle flange**

11 — **Axle flange**
removing/installing, page 39.6

12 — ***O-ring***
- always replace
- installing, page 39.6

13 — **Oil seal**
- remove with extractor lever **VW 681**
- installing, page 39.7

14 — **Needle bearing**
removing/installing, page 39.7

15 — **Transmission housing**

16 — **Gasket**

17 — **Cover for axle vent**

18 — **10 Nm (7 ft lb)**

19 — **Differential**
- disassembling/assembling, page 39.20
- adjusting ring gear, page 39.41

20 — **Impulse wheel**
for electronic speedometer

cardiagn.com

Differential assembly, removing/ installing

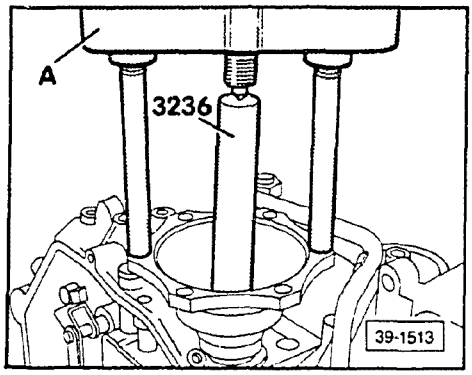

Axle flange (right side), removing

A — Kukko 18/1

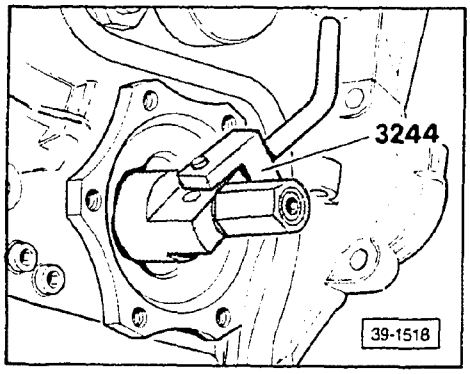

Axle flange (right side), installing

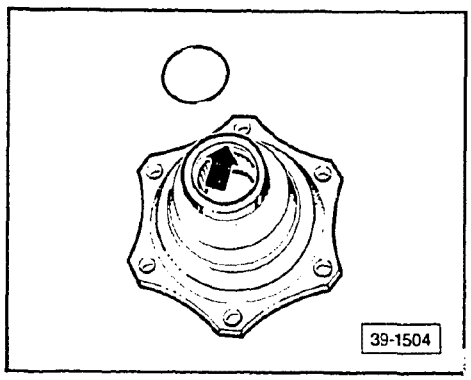

O-ring for axle flange (right side), replacing

cardiagn.com

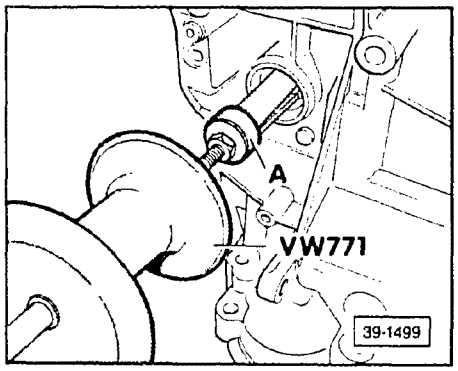

Needle bearing for axle flange (right side), removing

A — Kukko 21/5

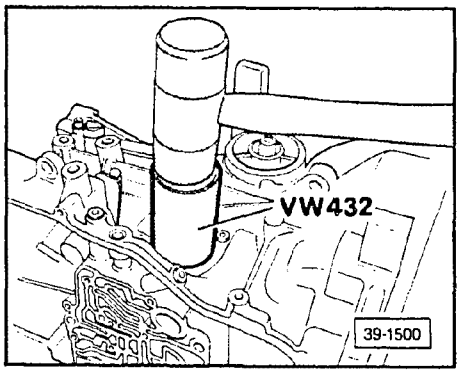

Needle bearing for axle flange (right side), installing

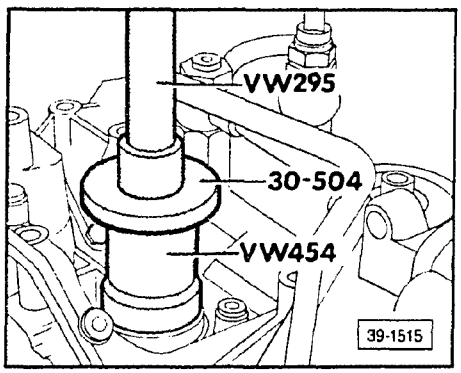

Oil seal for axle flange (right side), installing

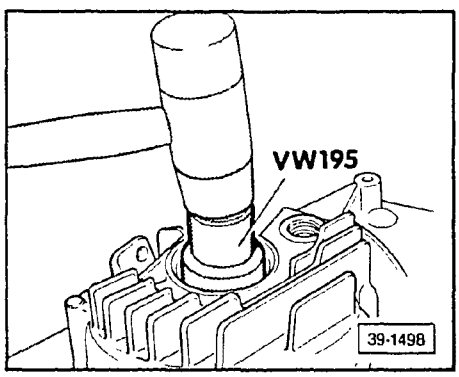

Oil seal for axle flange (left side), installing

cardiagn.com

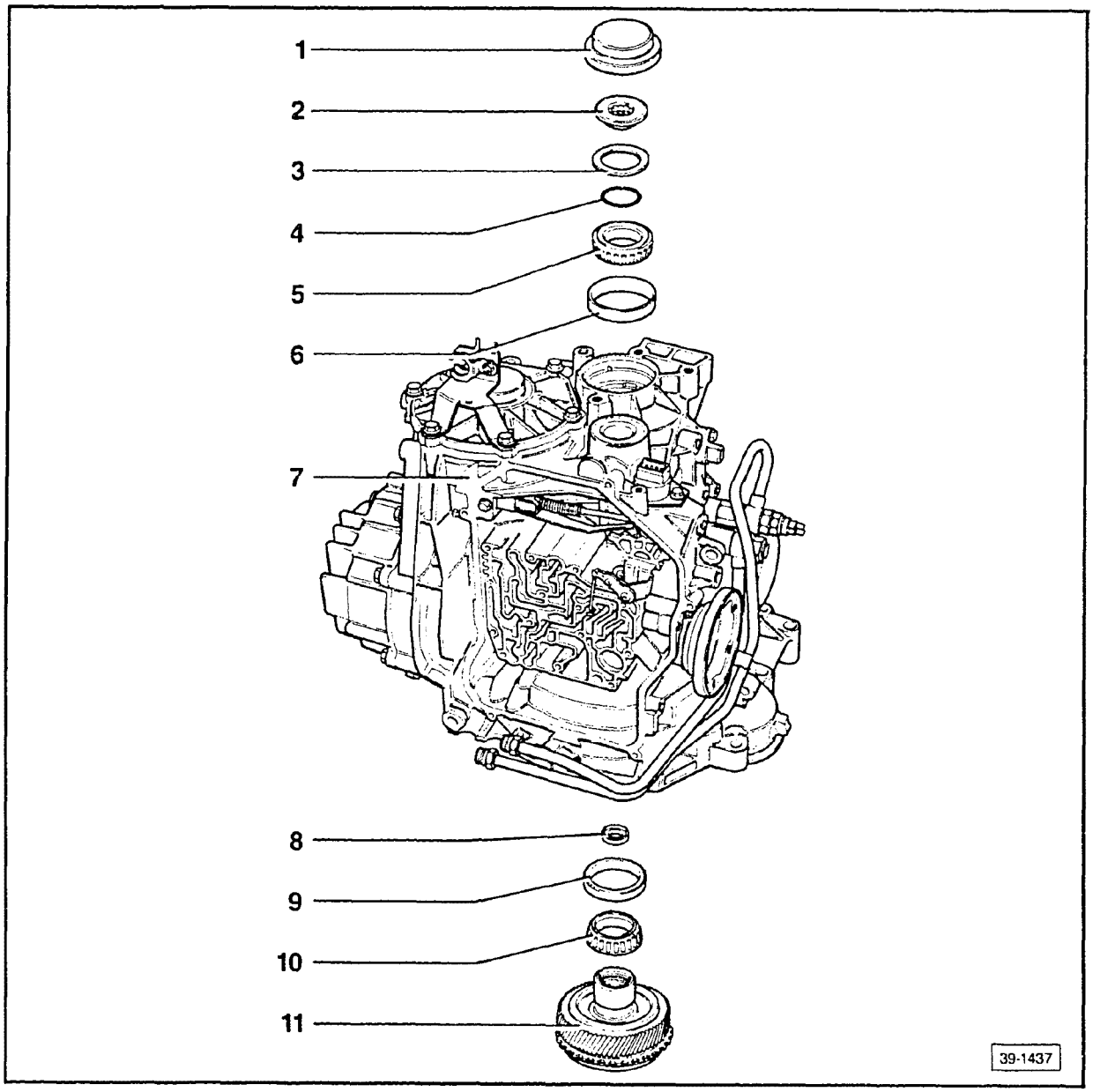

Note

Pinion and differential can remain installed during this procedure.

1 — **Rubber cap**
- pry out with screwdriver
- drive in with sleeve **40-20**

2 — **Tensioning bolt — 250 Nm (184 ft lb)**
- engage parking pawl when removing/installing
- removing/installing, page 39.11

3 — **Dished washer**
curved side faces tensioning bolt

4 — **Shim**
determining thickness, page 39.25

5 — **Inner race, tapered roller bearing**
- install so that lugs engage in groove of other tapered roller bearing inner race (item **10**)
- after determining adjustment shim measurement, install race on pinion using locking compound, Part No. **AMV 185 100 01**

6 — **Outer race, tapered roller bearing**
- drive out with suitable mandrel
- drive in using thrust pad **30-205**
- install using locking compound, Part No. **AMV 185 100 01**

cardiagn.com

7 — **Transmission housing**

8 — **Axial bearing**
- flat side faces drive shaft
- before installing, place tensioning bolt in output gear

9 — **Outer race, tapered roller bearing**
- drive out with suitable mandrel
- drive in using thrust pad **30-205**
- install using locking compound, Part No. **AMV 185 100 01**

10 — **Inner race, tapered roller bearing**
removing/installing, page 39.10

11 — **Output gear**
- number of teeth, see Technical data, Repair Group 37
- adjusting, page 39.25
- when replacing output gear, adjust planet carrier, Repair Group 38

cardiagn.com

Output gear assembly, removing/ installing

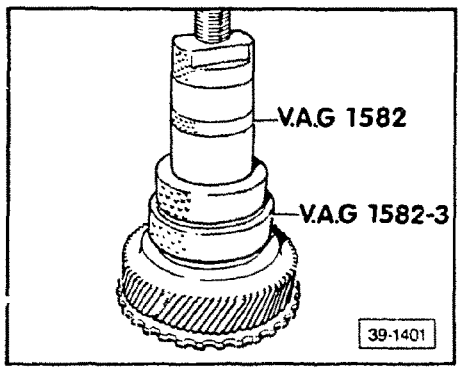

Inner race — tapered roller bearing (item 10, illustration 39-1437), removing

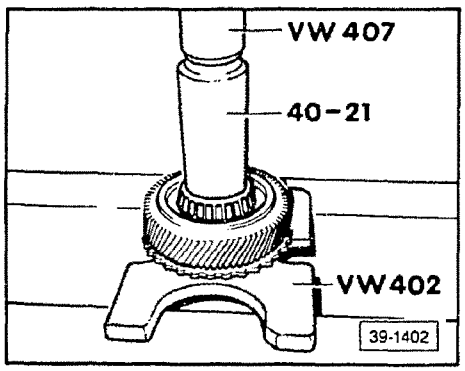

Inner race — tapered roller bearing (item 10, illustration 39-1437), pressing on

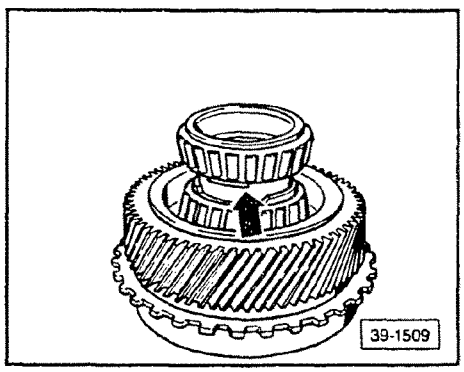

Inner race — tapered roller bearing (item 5, illustration 39-1437), installing

- install inner race using locking compound, Part No. **AMV 185 100 01**
  - position so that lugs on inner race engage grooves in opposite inner race (**arrow**)

cardiagn.com

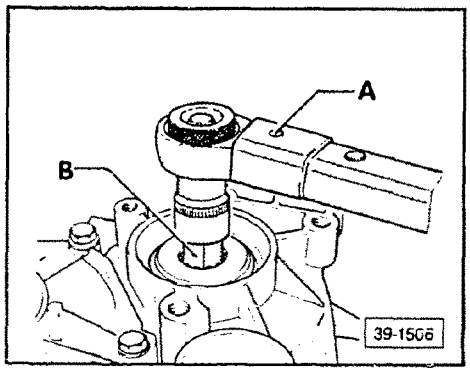

Tensioning bolt, replacing

A — torque wrench
B — two pin spanner wrench, **VW 524**

Note

Tightening torque = 250 Nm

cardiagn.com

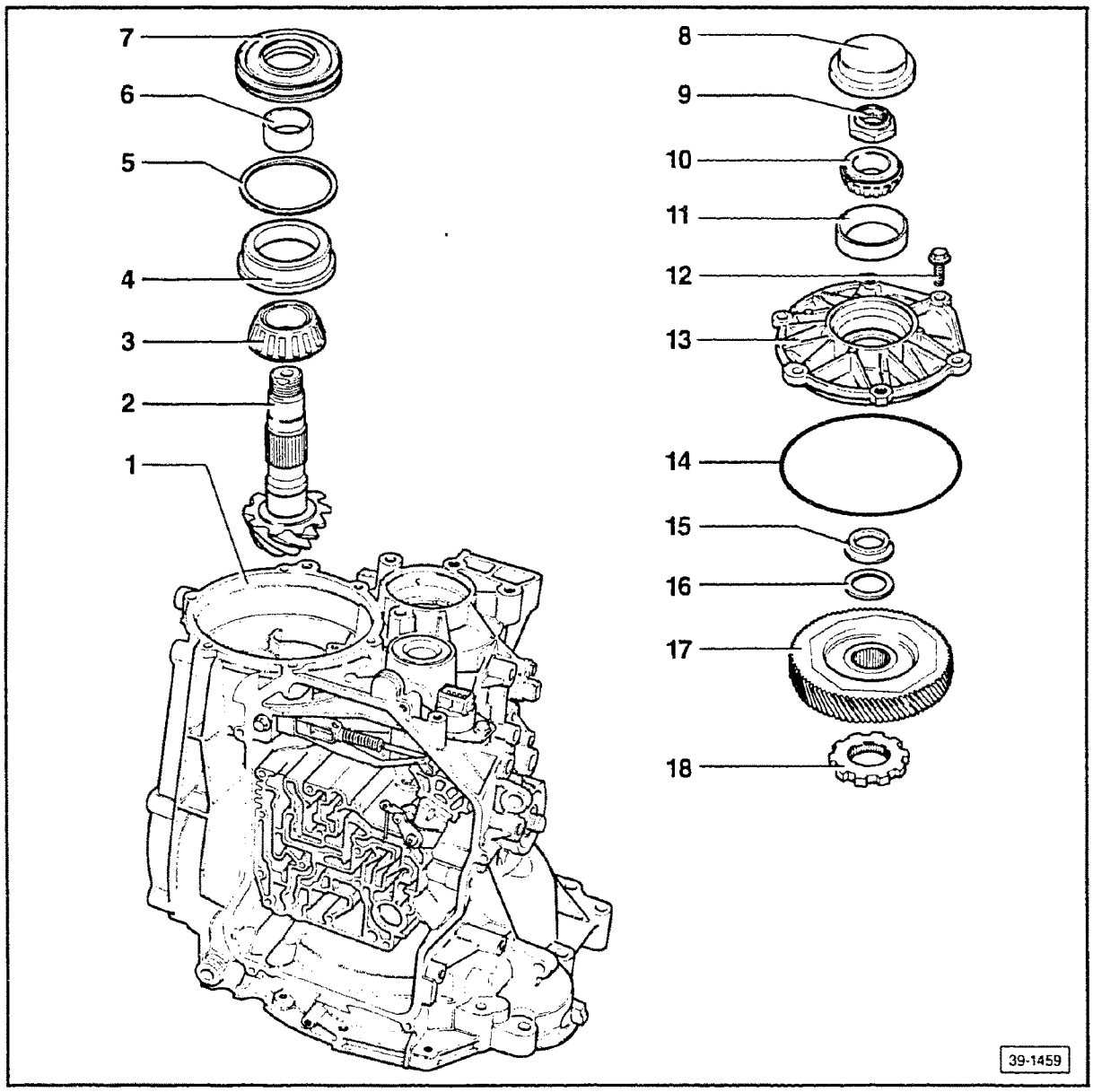

1 — Transmission housing

2 — Pinion
- number of teeth, see Technical data, Repair Group 37
- paired with ring gear and replaced as matched set
- installing, page 39.16
- adjusting, page 39.32

3 — Inner race, tapered roller bearing
removing/installing, page 39.14

4 — Outer race, tapered roller bearing
- drive out with mandrel
- installing, page 39.14

5 — Shim — S3
determining, see Pinion adjusting, page 39.32

6 — Bushing for pinion shaft
- remove with inner race of tapered roller bearing, page 39.14
- installing, page 39.14

7 — Oil seal for pinion shaft
- always replace
- drive out with screwdriver
- installing, page 39.15

8 — Rubber cap
- drive out with screwdriver
- installing, page 39.15

cardiagn.com

9 — **Hex nut**
secure after setting torque, page 39.15

10 — **Inner race, tapered roller bearing**

11 — **Outer race, tapered roller bearing**
- drive in with mandrel
- pressing in, page 39.15

12 — **25 Nm (18 ft lb)**

13 — **Pinion cover**
removing, page 39.16

14 — **O-ring**
always replace

15 — **Spacer**
wider contact surface faces drive gear

16 — **Shim — S4**
determining, see Pinion adjusting, page 39.32

17 — **Pinion drive gear**
- number of teeth, see Technical data, Repair Group 37
- raised collar faces parking pawl
- removing, page 39.16

18 — **Parking lock gear**
rounded side faces drive gear

cardiagn.com

Pinion assembly, removing/installing

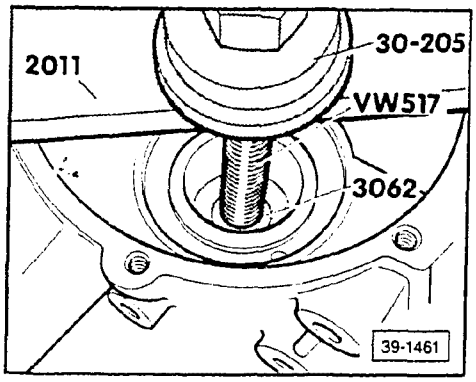

Outer race — tapered roller bearing (item 4, illustration 39-1459), installing in transmission housing

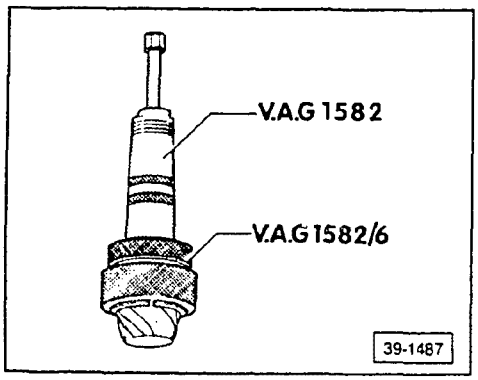

Inner race — tapered roller bearing (item 3, illustration 39-1459), removing

- remove along with pinion shaft bushing

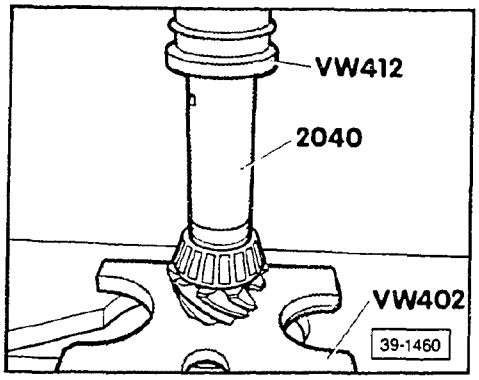

Inner race — tapered roller bearing (item 3, illustration 39-1459), installing

- press on, along with pinion shaft bushing

cardiagn.com

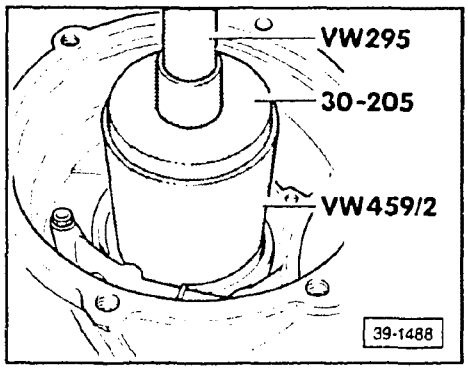

Oil seal for pinion shaft, installing

- drive seal in, up to stop
  - raised collar (inner) faces parking pawl

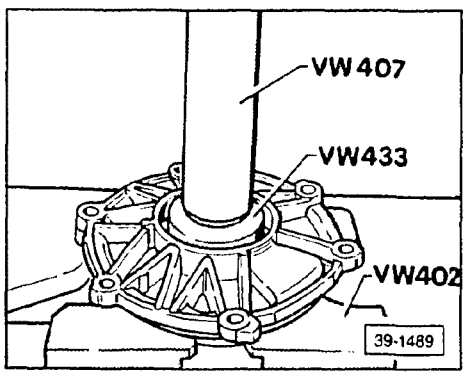

Outer race — tapered roller bearing (item 11, illustration 39-1459), pressing on

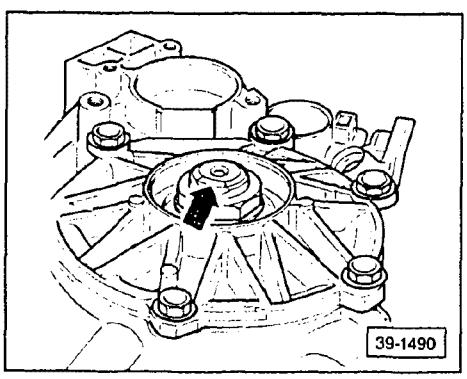

Hex nut, securing

- peen collar of hex nut against flat edge of pinion (**arrow**)

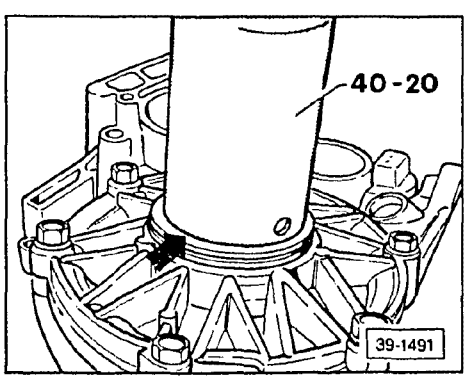

Rubber cap, installing

- drive cap (**arrow**) in, up to stop

cardiagn.com

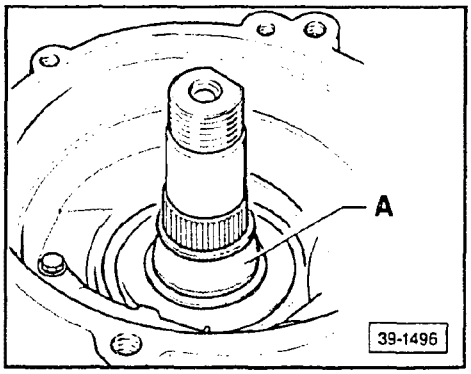

Pinion, installing

A = 3187

> **CAUTION**
>
> To avoid damage to the lip-type seal during pinion installation, use sleeve **3187**.

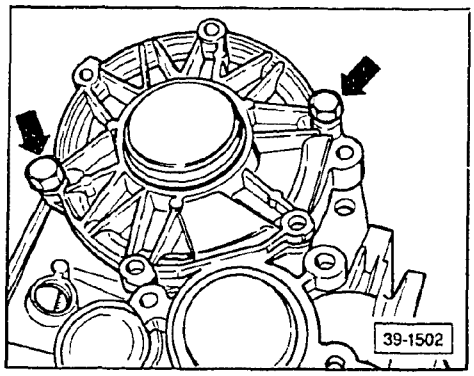

Pinion cover, removing (for pinion cover designs with threaded holes)

- remove rubber cap
- remove pinion hex nut
- thread two bolts (**arrows**) into pinion cover
- turn bolts, alternately and evenly, to press cover off

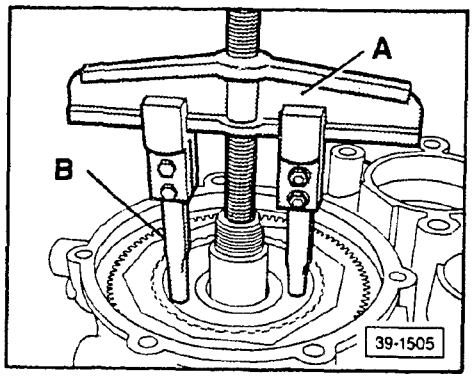

Pinion drive gear, removing

A — two arm puller **US 1078** (or **Kukko 20-10**)
B — puller hooks **Matra V172**

cardiagn.com

THIS PAGE
INTENTIONALLY
LEFT
BLANK

cardiagn.com

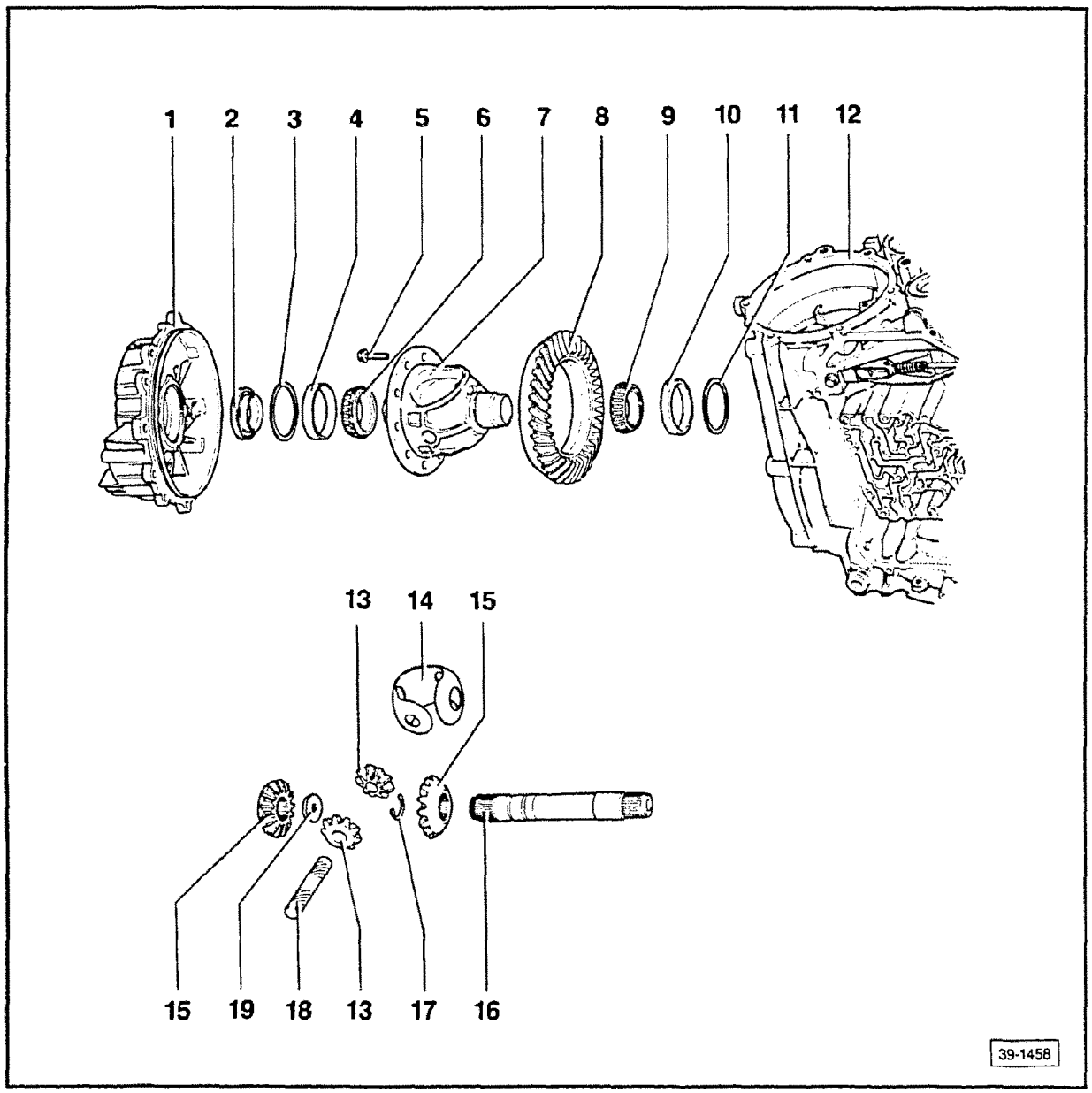

Note

Heat inner race of tapered roller bearings to 100°C (212°F) before pressing on.

1 — **Cover for differential gear**
removing/installing, page 39.5

2 — **Impulse wheel**
removing/installing, page 39.5

3 — **Shim — S1**
determining, page 39.41

4 — **Outer race, tapered roller bearing**
- drive out with mandrel
- pressing in, page 39.20

5 — **90 Nm (66 ft lb)**

6 — **Inner race, tapered roller bearing**
removing/installing, page 39.20

7 — **Differential housing**
re-adjust when replacing ring gear, page 39.41

8 — **Ring gear**
- number of teeth, see Technical data, Repair Group 37
- paired with pinion and replaced as matched set
- adjust pinion/ring gear set after replacing. See Adjustment Overview, page 39.24
- to remove, drive out of differential housing using mandrel
- before installing, heat to 100°C (212°F) and fabricate centering pin guide, page 39.21

cardiagn.com

9 — **Inner race, tapered roller bearing**
removing/installing, page 39.20

10 — **Outer race, tapered roller bearing**
- drive out with mandrel
- driving in, page 39.21

11 — **Shim — S2**
determining, page 39.41

12 — **Transmission housing**

13 — **Differential pinion gears**
installing, page 39.21

14 — **Thrust washer**
place in differential housing before installing gears

15 — **Differential side gears**
installing, page 39.21

16 — **Output shaft**
install output shaft first, before differential pinion shaft

17 — **Lock ring**

18 — **Differential pinion shaft**
- drive out with mandrel
- inspect for wear; replace if necessary

CAUTION
When driving shaft in, do not damage thrust washer.

19 — **Axle flange nut**

cardiagn.com

Differential, disassembling/ assembling

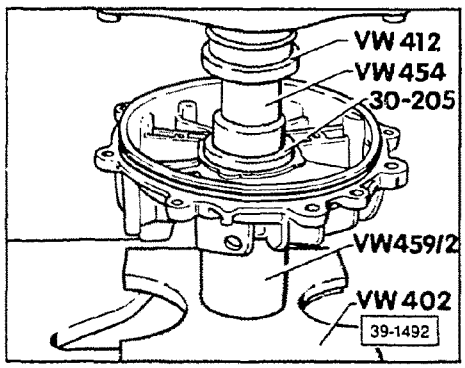

Outer race — tapered roller bearing (item 4, illustration 39-1458), pressing on

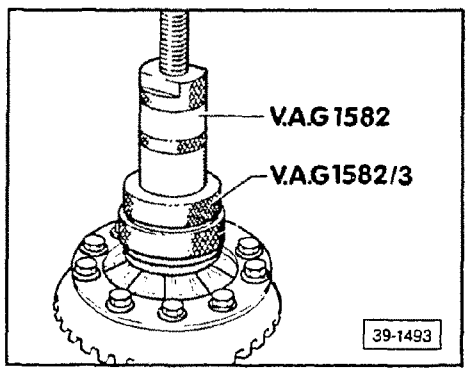

Inner race — tapered roller bearing (item 6, illustration 39-1458), removing

- thrust piece **40-105** (not shown) is positioned on differential housing

Note

When removing inner race (item **9**, illustration **39-1458**), follow this same procedure.

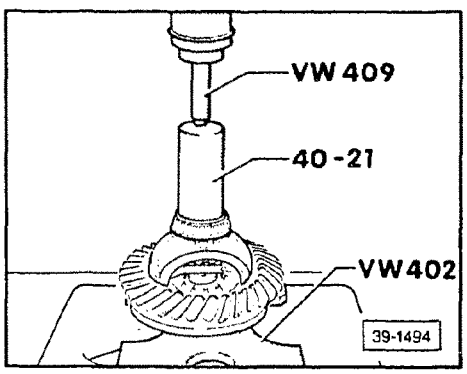

Inner race — tapered roller bearing (item 6, illustration 39-1458), installing

Note

When installing inner race (item **9**, illustration **39-1458**), follow this same procedure.

cardiagn.com

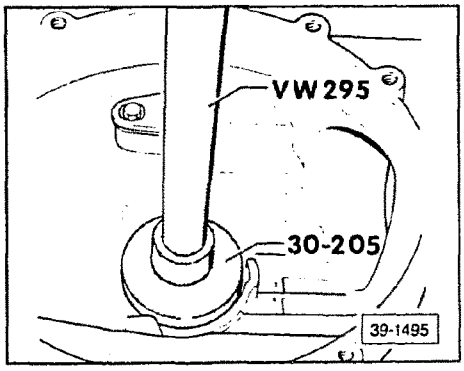

Outer race — tapered roller bearing (item 10, illustration 39-1458), driving in

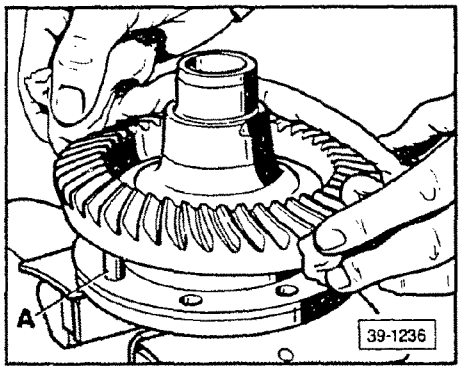

Ring gear, installing

- install ring gear, as follows:
  - heat gear to approximately 100°C (212°F)
  - center, using suitable-sized pins **A**

Differential gears, assembling

- position thrust washer in differential housing
  - before inserting, lubricate washer with gear oil
- install differential side gears
  - center gears by inserting left axle flange and axle shaft
- install differential pinion gears
  - pivot into position (at 180° angle to side gears) by turning drive shaft in direction of **arrow**
- align pinion gears with thrust washer
- drive in pinion shaft, to secure pinion gears

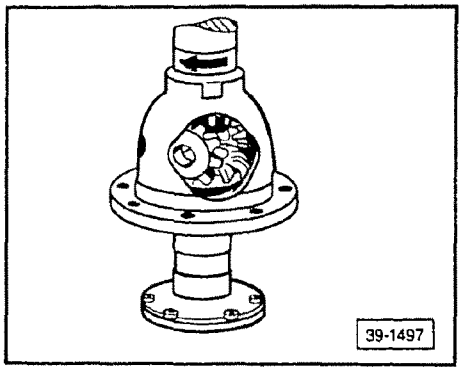

cardiagn.com

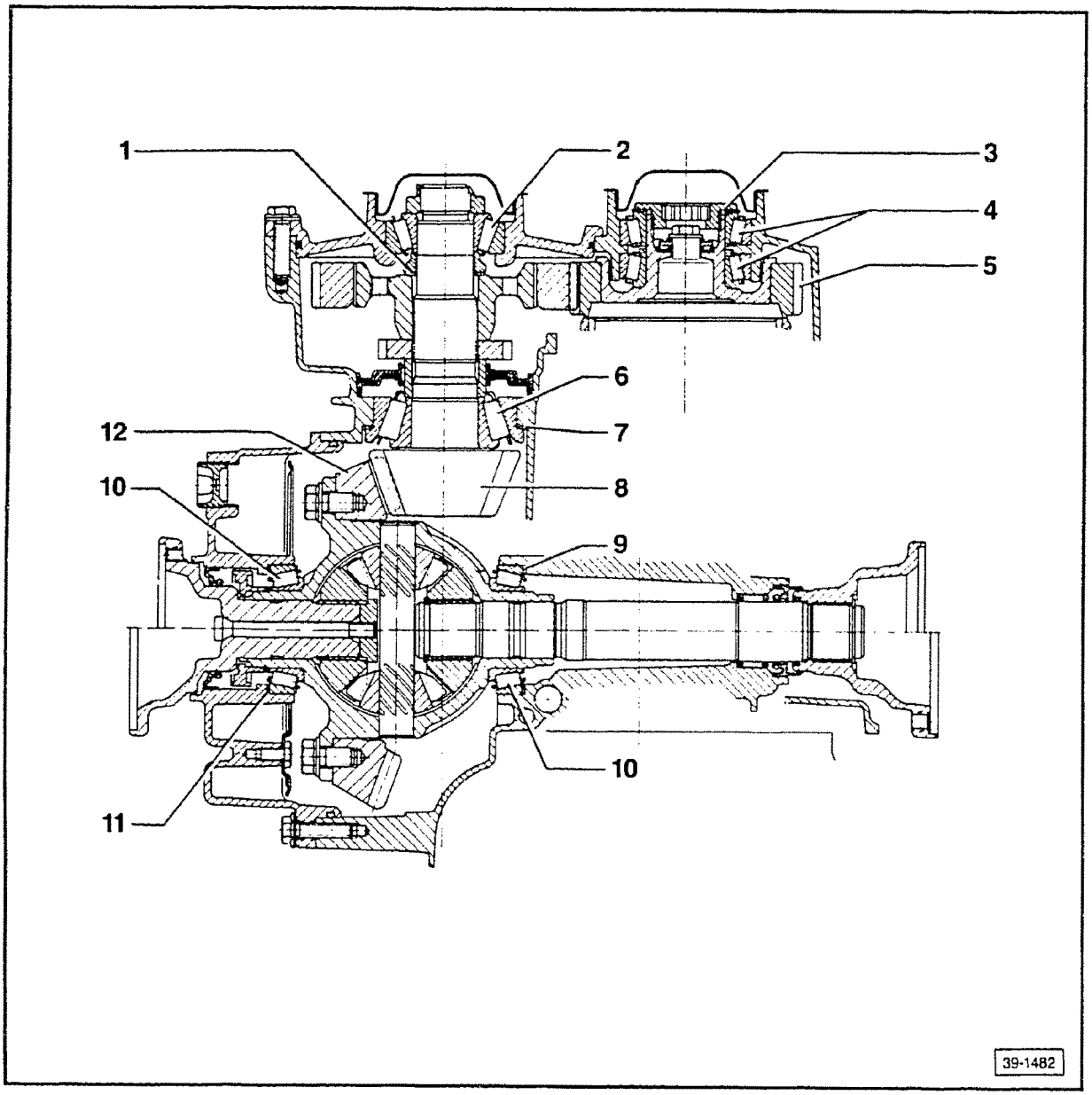

Note

See also Adjustment Overview chart (page 39.24), when replacing individual transmission components.

1 — S4 shim
- for pinion
- determine thickness from chart, page 39.38

2 — Tapered roller bearing (small)
- for pinion
- when replacing bearing, also replace large tapered roller bearing for pinion
- for new bearing, turning torque must be 135-265 Ncm (11.9-23.5 in. lb or 13.7-27.0 cm kg)
- when replacing bearing, install new **S3**, **S4** shims

3 — Shim
- for output gear
- determine thickness from chart, page 39.27

4 — Tapered roller bearings
- for output gear
- when replacing bearings, replace as a set
- measure turning torque via pinion shaft. For new bearings, torque must be 165-245 Ncm (14.6-21.7 in. lb or 16.8-25.0 cm kg) **above** turning torque for pinion shaft
- when replacing bearing, install new shim (see page 39.27)

5 — Output gear
adjusting, page 39.25

cardiagn.com

6 — Tapered roller bearing (large)
- for pinion
- when replacing bearing, also replace small tapered roller bearing for pinion
- for new bearing, turning torque must be 135-265 Ncm (11.9-23.5 in. lb or 13.7-27.0 cm kg)
- when replacing bearing, install new **S3**, **S4** shims

7 — S3 shim
- for pinion
- determine thickness from chart, page 39.40

8 — Pinion
- when replacing pinion, also replace ring gear
- adjusting, page 39.32

9 — S2 shim
- for ring gear
- determine thickness from chart, page 39.46

10 — Tapered roller bearings
- for differential
- when replacing bearings, replace as a set
- measure turning torque via pinion shaft. For new bearings, torque must be 50-70 Ncm (4.4-6.2 in. lb or 5.1-7.1 cm kg) **above** turning torque for pinion shaft
- when replacing bearings, install new **S3**, **S4** shims

11 — S1 shim
- for ring gear
- determine thickness from chart, page 39.46

12 — Ring gear
- when replacing ring gear, also replace pinion
- adjusting, page 39.30

cardiagn.com

CONTINUED IN THE

BEGINNING OF NEXT ROW

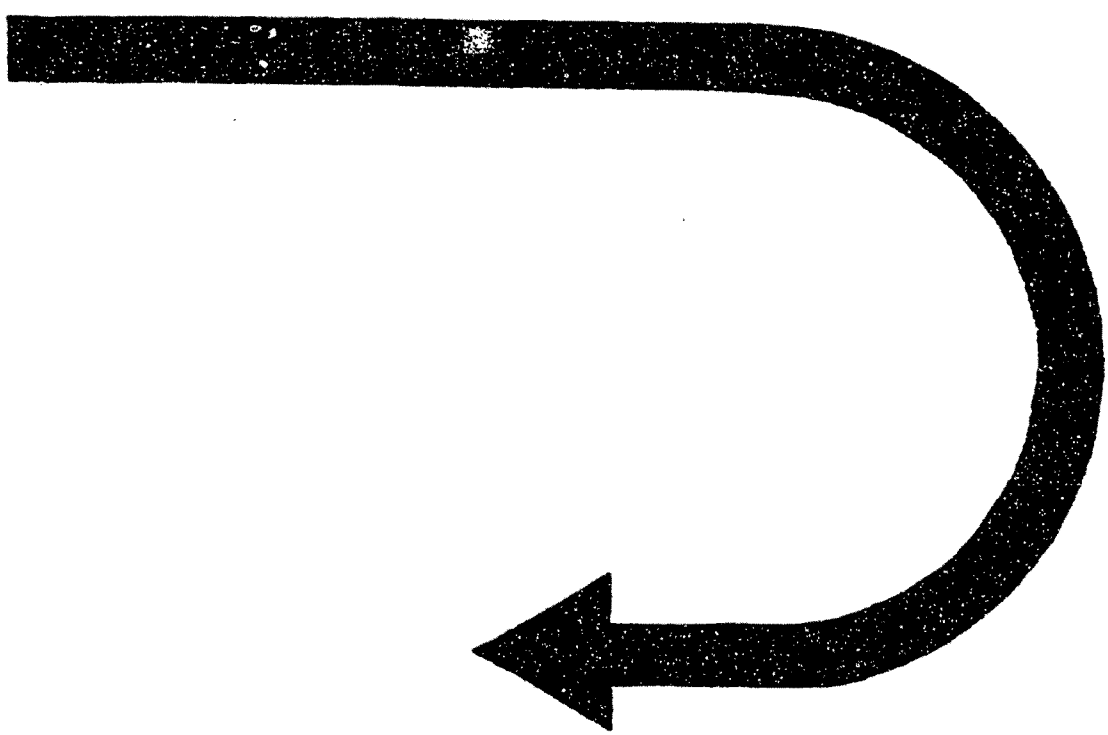

cardiagn.com

Adjustment overview

When assembling the final drive, it is only necessary to adjust the ring gear, pinion, drive gear or drive set, if parts have been replaced which **directly** affect differential adjustment. The following table should be used to avoid carrying out unnecessary adjustments.

To be adjusted / Replaced part	Ring gear (S1 + S2) page 39.41	Pinion (S3 + S4) using deviation r page 39.32	Output gear page 39.25	Pinion (S4) via turning torque page 39.35
Transmission housing	X	X	X	
Output gear bearing			X	
Output gear			X	
Differential housing	X			
Pinion bearing		X		
Differential bearing	X			
Pinion cover				X
Pinion bushing, parking pawl gear and pinion drive gear				X

cardiagn.com

Output gear, adjusting

Note

Adjust output gear by shimming it to a specified thickness. Determine the specified thickness using the chart at the end of this section. In order to read the chart, the specified bearing preload must be calculated, using the equation:

specified bearing preload = c + d − e

Values for **c**, **d**, and **e** are given or determined, as follows:

Dimension c, constant

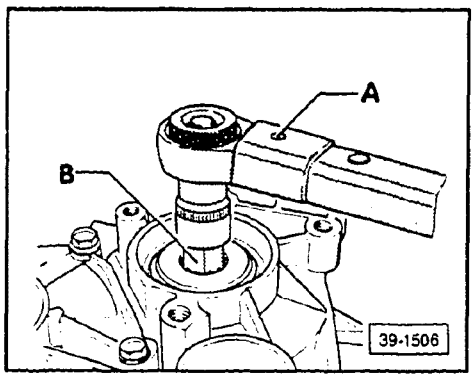

A — torque wrench
B — two pin spanner wrench **VW 524**

- tighten tensioning bolt to 100 Nm (74 ft lb)
  - **do not** install dished washer (1.50 mm thickness **c**), or shim, at this time
  - parking pawl must be engaged
- remove tensioning bolt

Dimension d, determining

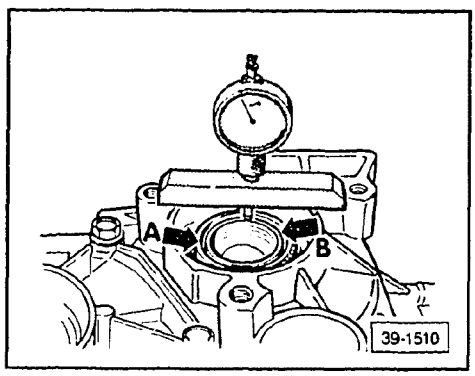

- install dial indicator along with measuring bar **VW 382/7**
  - zero dial indicator with 3 mm preload
- measure **d** = distance between output gear **B** and inner race of tapered roller bearing **A**
- record dial indicator reading

Example

d = 1.00 mm

Dimension e, bearing preload (constant)

e = 0.18 mm

cardiagn.com

Specified bearing preload, calculating

Note

Using values for **c**, **d** and **e** determined previously, calculate the following:

Specified bearing preload = c + d − e

Example

Thickness of dished washer **c**	1.50 mm
Dial indicator reading **d**	+ 1.00 mm
Bearing preload **e**	− 0.18 mm
Specified bearing preload =	2.32 mm

Specified shim value, determining

Note

Using the specified bearing preload just calculated, find the correct adjustment shim value in the chart on page 39.27.

Adjustment shim, installing

- install adjustment shim on output shaft
- install axial needle bearing and dished washer
- install tensioning bolt
  - tighten to 250 Nm (184 ft lb)

cardiagn.com

Specified bearing preload (mm)	Shim size needed	Part number
1.55 – 1.59	1.60	095 323 839
1.60 – 1.64	1.65	095 323 839 A
1.65 – 1.69	1.70	095 323 839 B
1.70 – 1.74	1.75	095 323 839 C
1.75 – 1.79	1.80	095 323 839 D
1.80 – 1.84	1.85	095 323 839 E
1.85 – 1.89	1.90	095 323 839 F
1.90 – 1.94	1.95	095 323 839 G
1.95 – 1.99	2.00	095 323 839 H
2.00 – 2.04	2.05	095 323 839 J
2.05 – 2.09	2.10	095 323 839 K
2.10 – 2.14	2.15	095 323 839 L
2.15 – 2.19	2.20	095 323 839 M
2.20 – 2.24	2.25	095 323 839 N
2.25 – 2.29	2.30	095 323 839 P
2.30 – 2.34	2.35	095 323 839 Q
2.35 – 2.39	2.40	095 323 839 R
2.40 – 2.44	2.45	095 323 839 S
2.45 – 2.49	2.50	095 323 839 T
2.50 – 2.54	2.55	095 323 839 AA

CAUTION

Part numbers are for reference only. Always check with your Parts Department for latest information.

Note

Verify shim thickness at several sites around circumference, using a micrometer. Inspect shim(s) for burrs or irregularities.

cardiagn.com

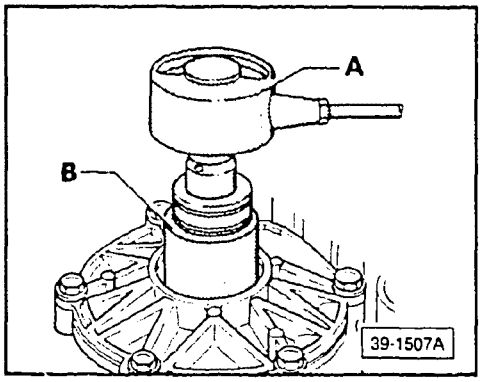

Output gear bearings, checking turning torque

A — torque wrench, with range of 0-600 Ncm (0-55 in. lb or 0-65 cm kg)
B — socket (41 mm)

- lubricate bearing with ATF before checking

Note

Measure output gear turning torque by turning pinion.

For **new** tapered roller bearings, the turning torque must be 220-260 Ncm (19.5-23.0 in. lb or 22.4-26.5 cm kg) **higher** than the turning torque for the pinion shaft/differential alone.

Example

Pinion shaft/differential	260 Ncm (23.0 in. lb or 26.5 cm kg)
Drive gear	+ 240 Ncm (21.2 in. lb or 24.4 cm kg)
	500 Ncm (44.3 in. lb or 51.0 cm kg)

Inner race of tapered roller bearing, securing

Note

After checking turning torque of output gear bearings:

- secure inner race of tapered roller bearing (*arrow*) with sealant **AMV 185 100 01**
- install axial bearing and dished washer
- install tensioning bolt
  - tighten to 250 Nm (184 ft lb)

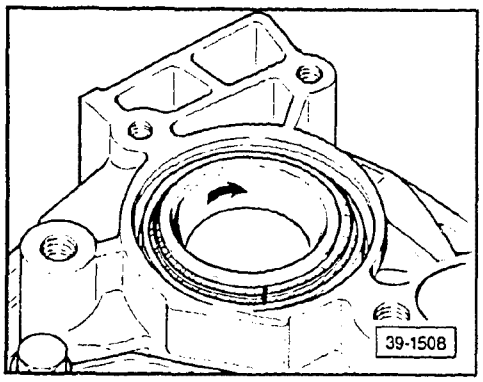

cardiagn.com

Ring gear/pinion, adjusting

General notes

Careful adjustment of the ring gear and pinion is important to ensure that the final drive runs quietly and has a long service life. During manufacture, the ring gear and pinion are matched to each other, then inspected on special testing machines to ensure a correct mesh pattern and silent running in both directions. The quietest running position is determined by moving the pinion axially and lifting the ring gear away from the no-play meshing position, maintaining the backlash within specified tolerance.

The deviation **r** from the master gauge **Ro** is measured for the ring gear pinion sets supplied as replacement parts. The value of **r** is marked on the outer face of the ring gear. Ring gear and pinion must always be replaced as a matched set.

Replacement parts, identifying

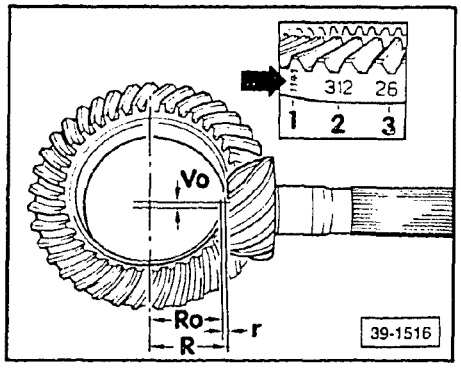

1 — Number **1141** (**arrow**) identifies Oerlikon gear sets with **41:11** ratio
2 — Matching number (**312**) on ring gear/ pinion set
3 — Deviation **r** (pinion deviation) measured against the master gauge of the testing machine used in production. The deviation **r** is always given in 1/100 mm

Example

"26" means **r** = 0.26 mm

Ro — Length of master gauge used in production

Ro = 5.92 mm

R — Actual dimension between ring gear center and end face of pinion in position for the quietest running of the particular gear set

Vo — Hypoid offset

cardiagn.com

Ring gear/pinion, adjusting

- determine **S total**, total shim thickness (i.e., **S1** + **S2**) to give specified preload of differential bearings
- determine total shim thickness **S total** (**S3** + **S4**) to give specified preload of pinion bearings
- distribute **S total** between **S3** and **S4** so dimension between ring gear centerline and pinion end face corresponds to installation dimension **R** determined in production
- distribute **S total** between **S1** and **S2** to obtain specified backlash between ring gear and pinion

Note

Always try to adjust the ring gear and pinion to obtain the same quiet running position which was determined on the special test machine used in production.

All assembly operations and measurements require great care and absolute cleanliness to produce accurate results

cardiagn.com

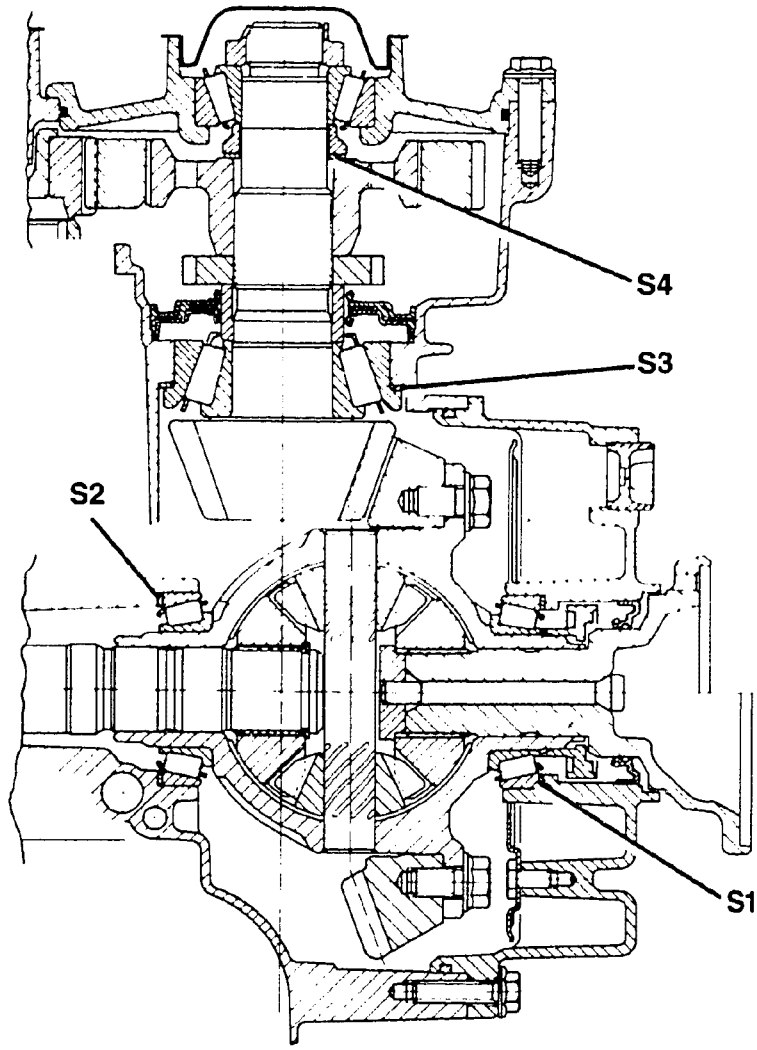

S1 — Shim for ring gear, in final drive housing cover

S2 — Shim for ring gear, in final drive housing

S3 — Shim for pinion in final drive housing

S4 — Shim for pinion, between pinion drive gear and spacer

cardiagn.com

Pinion shaft, adjusting

Note

If the pinion shaft bushing, spacer, pinion cover or small pinion bearing are replaced, only the **S4** shim thickness should be redetermined. Begin with "Pinion drive gear bearing, checking turning torque," page 39.35.

If the ring and pinion set, or the large pinion bearing are replaced, proceed with the pinion shaft adjustment which follows.

Adjust preload of pinion bearings by finding total shim thickness (i.e. **S3** + **S4**). When selecting shims for test use or actual use, inspect for burrs or irregularities. Verify shim thickness at several sites around the circumference, using a micrometer.

S3/S4 test shims, installing

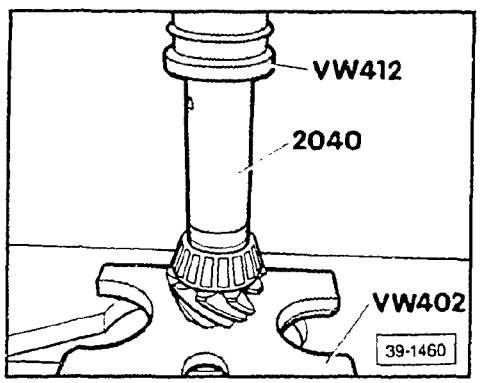

- install inner race of tapered roller bearing, along with pinion shaft bushing

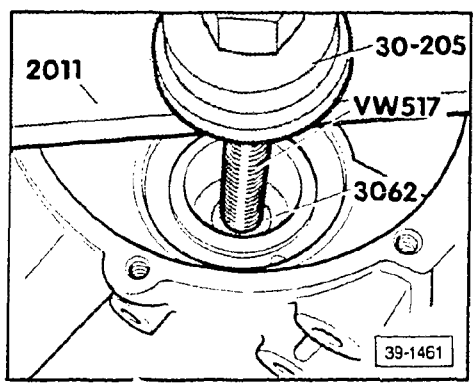

- install outer race of tapered roller bearing, along with **S3** test shim (1.5 mm), into final drive housing

cardiagn.com

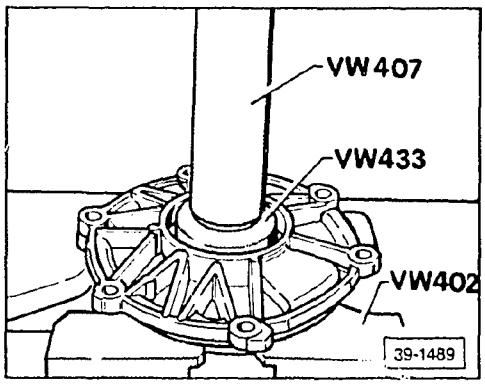

- install outer race of tapered roller bearing in pinion cover

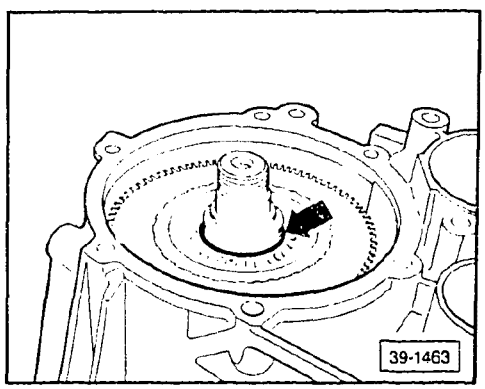

- install, in the following sequence:
  - pinion
  - parking lock gear
  - drive gear
  - **S4** test shims (**arrow**) = 2.4 mm total thickness
  - spacer

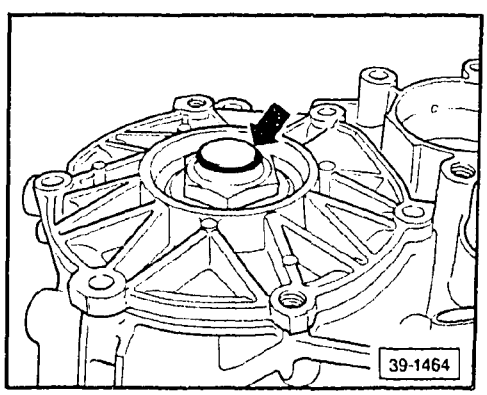

- continue installing:
  - pinion cover
    (do not tighten to specifications at this time — see below)
  - inner race of tapered roller bearing
  - pinion hex nut (**arrow**)
    (do not tighten nut to specifications, at this time — see below)
- tighten pinion cover bolts (four)
  - torque specification = 25 Nm (18 ft lb)

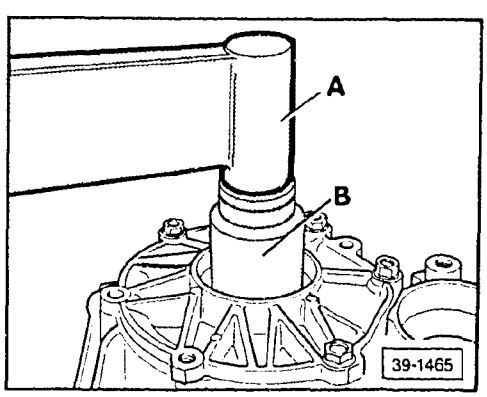

A — torque wrench
B — socket (41 mm)

- engage parking pawl
- tighten pinion hex nut
  - torque specification = 240 Nm (177 ft lb)

cardiagn.com

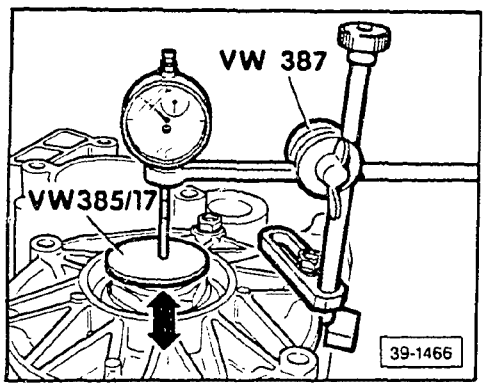

S4 test shim correction, determining

Note

S4 corrected value must be calculated in the following equation:

$S4_c = x - y - z$

Values for **x**, **y**, and **z** are given or measured, as follows:

Dimension x, constant

x = 2.40 mm (value of **S4** test shims before correction)

Dimension y, measuring

- attach dial indicator holder **VW 387** to pinion cover
- position **VW 387** (50 mm diameter magnetic plate) on pinion end
- insert dial indicator in holder and set to zero
- move pinion in direction of **arrow** to limits of travel, and note reading

> **CAUTION**
>
> Do not allow pinion to turn during procedure or bearings will settle and reading will be incorrect.

Example

Dimension **y** = 0.95 mm

Dimension z, constant

z = 0.25 mm (bearing preload and settling allowance)

cardiagn.com

S4 test shim correction, calculating

Note

Using values for **x**, **y** and **z** determined previously, calculate the following:

$$S4_c = x - y - z$$

Example

S4 test shims **x**	2.40 mm
Dial indicator measurement **y**	– 0.95 mm
Bearing preload/settling **z**	– 0.25 mm
S4 test shim, corrected value =	1.20 mm

- remove pinion cover
- install 1.20 mm shim
- install pinion cover
- tighten pinion hex nut to 340 Nm (251 ft lb)
- loosen hex nut and retighten to 240 Nm (177 ft lb)

Pinion drive gear bearing, checking turning torque

Note

If only the **S4** shim thickness is to be redetermined, begin by checking turning torque.

A — torque wrench with range of 0-600 Ncm (0-60 in. lb or 0-70 cm kg)
B — socket (41 mm)

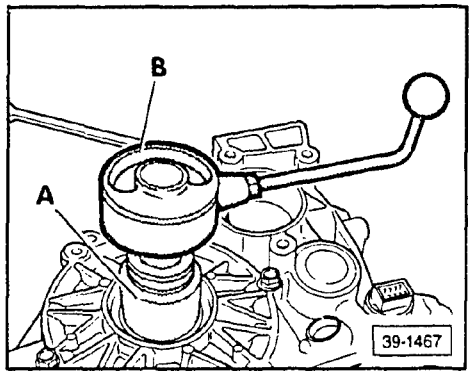

Note

For **new** tapered roller bearings, the turning torque must be between 135-265 Ncm (11.9-23.4 in. lb or 13.7-27.0 cm kg)

For bearings with normal wear, measure turning torque before disassembly.

cardiagn.com

S3 shim (actual), determining

Note

The **S3** shim thickness must be calculated using the equation:

S3 = +/− **e** + **k** − **r**

Values for **e**, **k**, and **r** are given or measured, as follows:

Dimension e, measuring

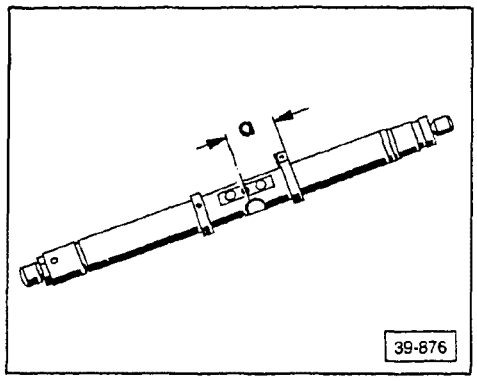

- set centering ring on universal measuring bar **VW 385/1** to distance **a** = 70 mm

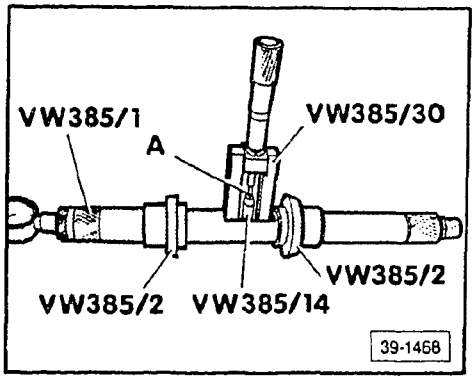

Note

If R_o = 59.2 mm:

- assemble bar as shown
  - dial indicator extension **A** = 12 mm
  - **VW 385/30** = 59.2 mm
- set dial indicator to zero with 1 mm preload

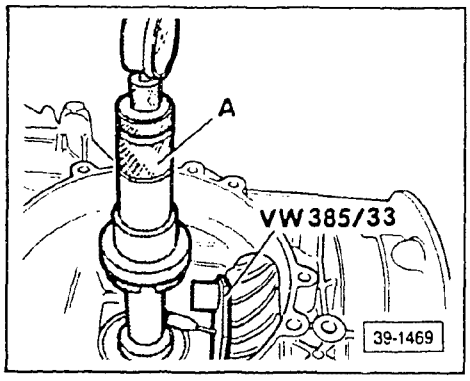

- place end plate **VW 385/33** on pinion end face
- remove master gauge and install measuring bar **A** in housing
- install cover for final drive housing and tighten four bolts
- pull 2nd centering ring outward until measuring bar can just be turned by hand

cardiagn.com

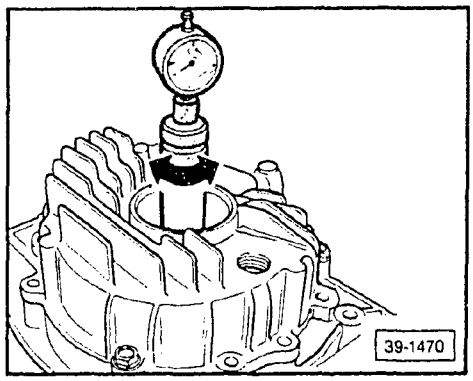

- turn measuring bar slightly until dial indicator contacts end face of pinion and indicates maximum deflection (return point)
  - measured reading = dimension **e** (maximum deflection)

Example

e = 0.32 mm (red figures)

Dimension k, constant

k = 1.5 mm (**S3** test shim thickness)

Dimension r, determining

r — deviation (marked on ring gear in 1/100 mm or determined by actual measurement)

S3 shim (actual), calculating thickness

Note

Using values for **e**, **k** and **r** determined previously, calculate the following:

S3 = +/− e + k − r

e is added within the equation if it was measured in the red range.
e is subtracted within the equation if it was measured in the black range.

Example

Dial indicator reading **e**	0.32 mm
S3 test shim **k**	1.50 mm
Deviation **r**	− 0.26 mm
S3 shim (actual) =	1.56 mm

cardiagn.com

Note

Select shims from the following chart:

S3 shim thickness (mm)	Part number
1.05	097 409 141 AG
1.10	097 409 141 AJ
1.15	097 409 141 AL
1.20	097 409 141 AN
1.25	097 409 141 AQ
1.30	097 409 141 AS
1.35	097 409 141 BA
1.40	097 409 141 BC
1.45	097 409 141 BE
1.50	097 409 141 BG
1.55	097 409 141 BJ
1.60	097 409 141 BL
1.65	097 409 141 BN
1.70	097 409 141 BQ
1.75	097 409 141 BS
1.80	097 409 141 CA
1.85	097 409 141 CC

CAUTION

Part numbers are for reference only. Always check with your Parts Department for latest information.

cardiagn.com

S4 shim (actual), determining

Note

Calculate **S4** shim thickness, using the equation:

S4 = +/− **e** + **k** − **r**

Values for **e**, **k** and **r** are given or determined, as follows:

Dimension e, measuring

e — dial indicator reading, i.e., maximum deflection (determined previously)

Dimension k, determining

k — **S4** test shim, corrected value (determined previously)

> **CAUTION**
>
> If only the **S4** shim is being redetermined, **k** = thickness of existing **S4** shim.

Dimension r, determining

r — deviation (marked on ring gear in 1/100 mm or determined by actual measurement)

S4 shim (actual), calculating

Note

Using values for **e**, **k** and **r** determined previously, calculate the following:

S4 = +/− e + k − r

Note

e is added within the equation if it was measured in the red range.

e is subtracted within the equation if it was measured in the black range.

Example

Dial indicator reading **e**	0.32 mm
S4 test shim, corrected value **k**	1.20 mm
Deviation **r**	−0.26 mm
S4 shim (actual) =	1.26 mm

Note

Select **S4** shim from the following chart. It may be necessary to install two **S4** shims, to arrive at specified thickness.

If a thicker **S3** shim is needed, a thicker **S4** shim must also be installed. A thinner **S3** shim will require a thinner **S4** shim.

cardiagn.com

S4 shim thickness (mm)	Part number	S4 shim thickness (mm)	Part number
1.000	082 519 141 AA	1.525	082 519 141 BD
1.025	082 519 141 AB	1.550	082 519 141 BE
1.050	082 519 141 AC	1.575	082 519 141 BF
1.075	082 519 141 AD	1.600	082 519 141 BG
1.100	082 519 141 AE	1.625	082 519 141 BH
1.125	082 519 141 AF	1.650	082 519 141 BJ
1.150	082 519 141 AG	1.675	082 519 141 BK
1.175	082 519 141 AH	1.700	082 519 141 BL
1.200	082 519 141 AJ	1.725	082 519 141 BM
1.225	082 519 141 AK	1.750	082 519 141 BN
1.250	082 519 141 AL	1.775	082 519 141 BP
1.275	082 519 141 AM	1.800	082 519 141 BQ
1.300	082 519 141 AN	1.825	082 519 141 BR
1.325	082 519 141 AP	1.850	082 519 141 BS
1.350	082 519 141 AQ	1.875	082 519 141 BT
1.375	082 519 141 AR	1.900	082 519 141 CA
1.400	082 519 141 AS	1.925	082 519 141 CB
1.425	082 519 141 AT	1.950	082 519 141 CC
1.450	082 519 141 BA	1.975	082 519 141 CD
1.475	082 519 141 BB	2.000	082 519 141 CE
1.500	082 519 141 BC	2.025	082 519 141 CF
		2.400	082 519 141 DC

CAUTION

Part numbers are for reference only. Always check with your Parts Department for latest information.

cardiagn.com

Ring gear, adjusting

Note

The ring gear must be adjusted if any one of the following parts are replaced:
- transmission housing
- differential cover
- differential bearing
- differential gear housing
- ring and pinion set

See Adjustment Overview, page 39.24.

With the **pinion removed**, adjust preload of the differential bearings by finding total shim thickness (i.e., **S1** + **S2**).

When selecting shims for test use or actual use, inspect shims for burrs or irregularities. Verify shim thickness at several sites around the circumference, using a micrometer.

S2 test shim, installing

- remove oil seals, outer races of differential bearings, and shims
  - install bearing outer race into transmission housing, along with 1.5 mm test shim (**S2**)
  - drive in to stop
- install differential into housing without speedometer gear
  - ring gear on left side (opposite cover side)

cardiagn.com

Test shim total (i.e., S1 + S2), determining

Note

Total test shim thickness is calculated as follows:

S test total = a + b + c

Values for **a**, **b** and **c** are given or determined as follows:

Dimension a, constant

a = 1.5 mm (**S2** test shim thickness)

Dimension b, measuring

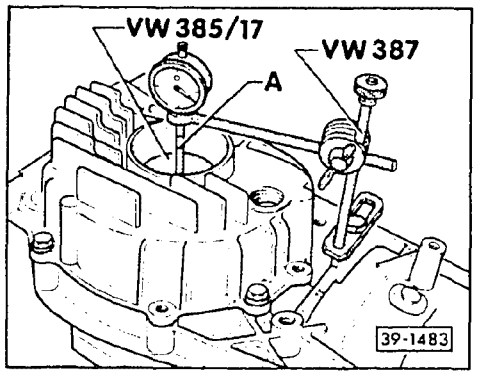

- attach measuring equipment, as shown
- zero dial indicator (3 mm range) with a 1 mm preload

A — dial indicator extension, 30 mm long

- move differential up and down to limits of travel, and note reading

Example

b = 0.60 mm

> **CAUTION**
>
> Do not turn the differential when measuring, otherwise the bearings will settle and the gauge reading will be inaccurate.

Dimension c, constant

c = 0.40 mm (bearing preload)

cardiagn.com

Test shim total (i.e., S1 + S2), calculating

Note

Using values for **a**, **b** and **c** determined previously, calculate the following:

S test total = a + b + c

Example

S2 test shim **a**	1.50 mm
Dial indicator reading **b**	0.60 mm
Bearing preload **c**	+0.40 mm
S test total =	2.50 mm

S1 test shim, calculating

Note

Using values determined previously, calculate the following:

S1 test = **S test total** – **S2** test

Example

S test total	2.50 mm
S2 test shim (constant)	–1.50 mm
S1 test shim =	1.00 mm

Differential bearings, measuring turning torque

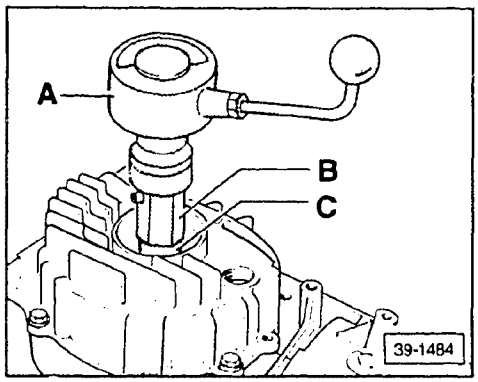

A — commercial torque wrench 0-600 Ncm (0-55 in. lb or 0-65 cm kg)
B — locking sleeve, **VW 521/4**
C — bushing, **VW 521/8**

- lubricate bearing with transmission oil
- check that turning torque equals:
  - new bearings = 70-150 Ncm (6.2-13.3 in. lb or 7.1-15.3 cm kg)
  - used bearings = 20-40 Ncm (1.8-3.5 in. lb or 2.1-4.0 cm kg)

Note

Whenever the gear set is adjusted, adjust/inspect the pinion, also. See page 39.32.

cardiagn.com

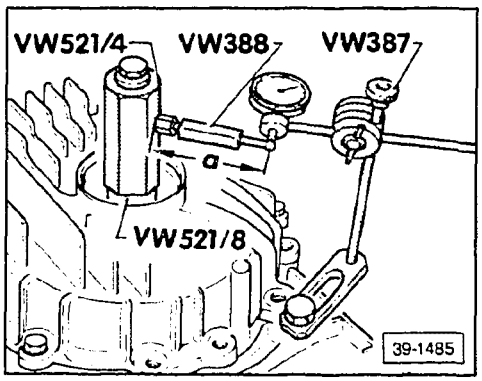

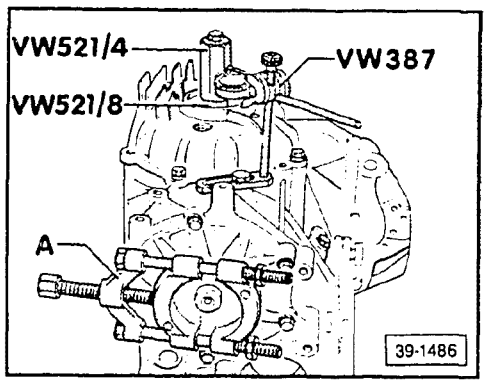

Backlash, determining

- install pinion with adjustment shims **S3** and **S4** installed (thicknesses determined previously)
- install differential
- turn differential several times in both directions to seat bearings
- attach measuring equipment
- adjust measuring lever **VW 388** to **a** = 70 mm
- while holding pinion from moving, turn ring gear to stop and set indicator to zero
- turn ring gear back and note backlash

Note

If pinion turning torque is too low, install separation device **Kukko 17/1**.

Average backlash b, calculating

- rotate ring gear 90°; tighten lock bolt and measure backlash again
- repeat above procedures at least two more times
- add all four readings together and divide by four to determine average backlash, **b**

CAUTION

If the measured readings differ from one another by more than 0.06 mm, there is incorrect fitting of the ring gear or the gear set itself. Recheck installation procedures. If necessary, replace gear set.

Example

1st measurement	0.49 mm
2nd measurement	0.48 mm
3rd measurement	0.50 mm
4th measurement	0.49 mm
Total	1.96 mm

Average backlash **b** = 1.96 mm ÷ 4 = 0.49 mm

cardiagn.com

S2 shim (actual), determining

Note

Calculate thickness of **S2** shim, in the equation:

S2 = **a** − (**b** × **c**) + **d**

Values for **a**, **b**, **c** and **d** are given or measured, as follows:

Dimension a, constant

a = 1.5 mm (**S2** test shim)

Dimension b, measuring

Note

b — value of average backlash calculated previously

Dimension c, constant

c = 1.17 mm

Dimension d, constant

d = 0.20 mm (the lift)

S2 shim (actual), calculating

Note

Using values for **a**, **b**, **c** and **d** determined previously, calculate the following:

S2 = **a** − (**b** × **c**) + **d**

Example

S2 test shim **a**	1.50 mm
Average backlash **b** x constant **c** (0.49 mm x 1.17 mm)	−0.57 mm
Lift value **d**	+0.20 mm
S2 shim (actual) =	1.13 mm

Note

Select shim(s) from chart on page 39.46.

cardiagn.com

S1 shim (actual), calculating

Note

Using values determined previously, calculate the following:

S1 actual = **S test total** – **S2** actual

Example

S test total	2.50 mm
S2 shim (actual)	–1.13 mm
S1 shim (actual) =	1.37 mm

Note

Select **S1** and **S2** shims from the following chart. (It may be necessary to install two shims each, to arrive at the specified thickness.)

S1 and S2 shim thickness	Part number
0.55	097 409 298 AE
0.60	097 409 298 AG
0.65	097 409 298 AJ
0.70	097 409 298 AL
0.75	097 409 298 AN
0.80	097 409 298 AQ
0.85	097 409 298 AS
0.90	097 409 298 BA
0.95	097 409 298 BC
1.00	097 409 298 BE

CAUTION

Part numbers are for reference only. Always check with your Parts Department for latest information.

cardiagn.com

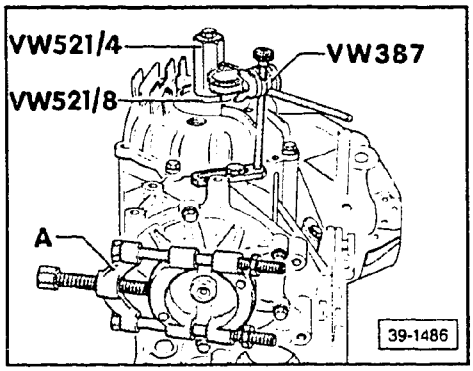

Backlash, checking

- measure backlash four times around circumference of ring gear, after installing shim **S1** and **S2**
  - acceptable values can range from 0.15-0.25 mm
  - no two values can deviate **from each other** by more than 0.05 mm

cardiagn.com

Index

097 4-speed automatic

- diagnosis, preliminary **D3-10**
- electronic components **D3-30**
- On-Board Diagnostic (OBD)/ safety functions **D3-20**
- troubleshooting using electrical test steps **D3-120**

Tester VAG 1551

- connecting **D3-40**
- Diagnostic Trouble Code (DTC) chart **D3-60**
- Diagnostic Trouble Code (DTC) Memory, reading **D3-50**
- individual measuring values, reading **D3-110**
- measuring value block (early version) **D3-90**
- measuring value block (late version) **D3-100**
- returning to basic setting **D3-80**

cardiagn.com

Transmission, preliminary diagnosis

Do not attempt repairs to the 097 4-speed automatic transmission until the following preliminary diagnostic steps have been performed.

Remedy each condition found as a result of the procedures described below. After each condition is corrected, road test the vehicle again before continuing to the next numbered step:

1 - Test drive vehicle

- test drive to verify customer complaints (if possible let customer drive)

2 - Basic setting

- reset transmission basic setting
- road test vehicle

3 - Check for leaks

- check vehicle for visible leakage of ATF from transmission and cooler lines, or hypoid oil from differential

4 - Check ATF level

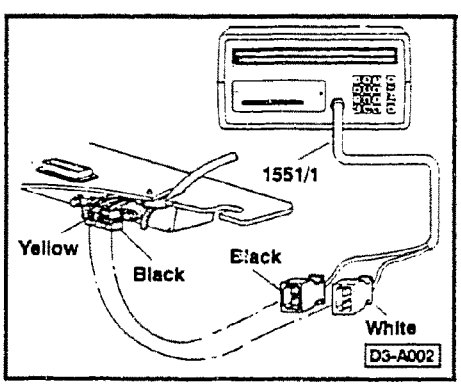

ATF must be at operating temperature (approx. 60°C or 140°F), and the ATF level at operating temperature must be within specifications. Connect **VAG 1551** Scan Tool to the yellow and black diagnosis terminals in the driver's footwell (see illustration).

The ATF temperature reading is accessed with diagnosis function **08**, group **05**, channel **01**, section D3-100. ATF temperature must be within stated range.

Note
ATF in the 097 transmission is reddish in color when new but soon discolors to a dark brown/black. A dark brown/black color is normal.

If repairs to the transmission are necessary, a complete printout of the **VAG 1551** On-Board Diagnostic **(OBD)** will be required. Switch the printer **ON** for all **OBD** functions performed and save the printout generated. The printout can then be attached to the repair order if necessary.

cardiagn.com

ATF contamination

If ATF is mixed with engine coolant or water it can have a milky appearance and be somewhat lighter in color. Causes for such fluid mixing can be due to leaks at the dipstick (water) or a malfunctioning transmission ATF cooler (high ATF level combined with low coolant level).

5 - Diagnostic Trouble Code (DTC) reading using VAG 1551

Refer to the sections which follow for complete instructions on recalling the Diagnostic Trouble Code **(DTC)** Memory with the **VAG 1551**.

- if malfunctions have been recorded, follow the directions in the **DTC** chart to locate the cause of the malfunction and make the necessary repairs

6 - Measuring value check with VAG 1551

- If no malfunctions are recorded or if the condition still exists after malfunctions have been corrected, use the **VAG 1551** Scan Tool **(ST)** to read measuring value block **(08)**

cardiagn.com

On-Board Diagnostic (OBD) of automatic transmission 097

Function

The Transmission Control Module **(TCM) J 217** is equipped with a Diagnostic Trouble Code **(DTC)** Memory.

If malfunctions occur in the monitored sensors or components, these are stored in the **DTC** Memory with an indication of the type of malfunction.

Malfunctions which occur only occasionally are classified as "sporadic". Malfunctions occurring sporadically are identified as such. See Notes on malfunction recognition, which follow.

The control module for the automatic transmission distinguishes different malfunctions after analyzing the information (see **DTC** tables in section D3-60), and stores these until the contents of the **DTC** Memory are erased.

Electrical malfunctions which influence vehicle handling, can be diagnosed with the Scan Tool **(ST) VAG 1551**. Only the Scan Tool used in operating mode 1, "Rapid data transfer," can effectively access the vehicle's **OBD** capabilities.

Backup functions of Transmission Control Module (TCM)

If a critical failure relating to the transmission should occur during vehicle operation, the transmission will continue to operate, but only in the "limp home" i.e. backup mode. In the backup mode the transmission will automatically engage 3rd gear **(3GR)** hydraulically.

When the vehicle is re-started in the backup mode prior to malfunction elimination, the 2nd or 3rd **(3GR)** gear will be actuated hydraulically (with the gear selector in either the **D**, **3**, or **2** position).

If malfunctions that result in backup mode operation are eliminated, the transmission will remain in the backup mode until the ignition is switched **OFF**.

During backup mode operation, the **TCM** will not actuate the cruise control system.

cardiagn.com

Conditions that result in the backup mode:

- open or short circuits in wiring
- malfunctioning Transmission Control Module (TCM)
- malfunctioning solenoids

Notes on malfunction recognition:

- If a malfunction persists over a certain period of time, it is stored as a **static** malfunction. If the malfunction disappears for a certain time, it is then classified as "sporadic". If the malfunction no longer occurs during the next 20 engine starts, this sporadic malfunction is automatically erased.
- Sporadic malfunctions are indicated by "SP" on the right of the display of **VAG 1551** when interrogating the **DTC** Memory. "Sporadic fault" is also printed out on the log if the printer is switched **ON**.

Technical data of On-Board Diagnostic (OBD)

Memory • Permanent memory • Volatile memory	 yes no
Data output • Rapid data transfer • Diagnostic Trouble Code (DTC) output	 yes no
Output Diagnostic Test Mode (DTM)	no
Basic setting	yes
Coding control module	no
Reading measured value block	yes
Reading individual measured value	yes
Installed locations of components	Section D3-30

cardiagn.com

Electronic components, automatic transmission 097

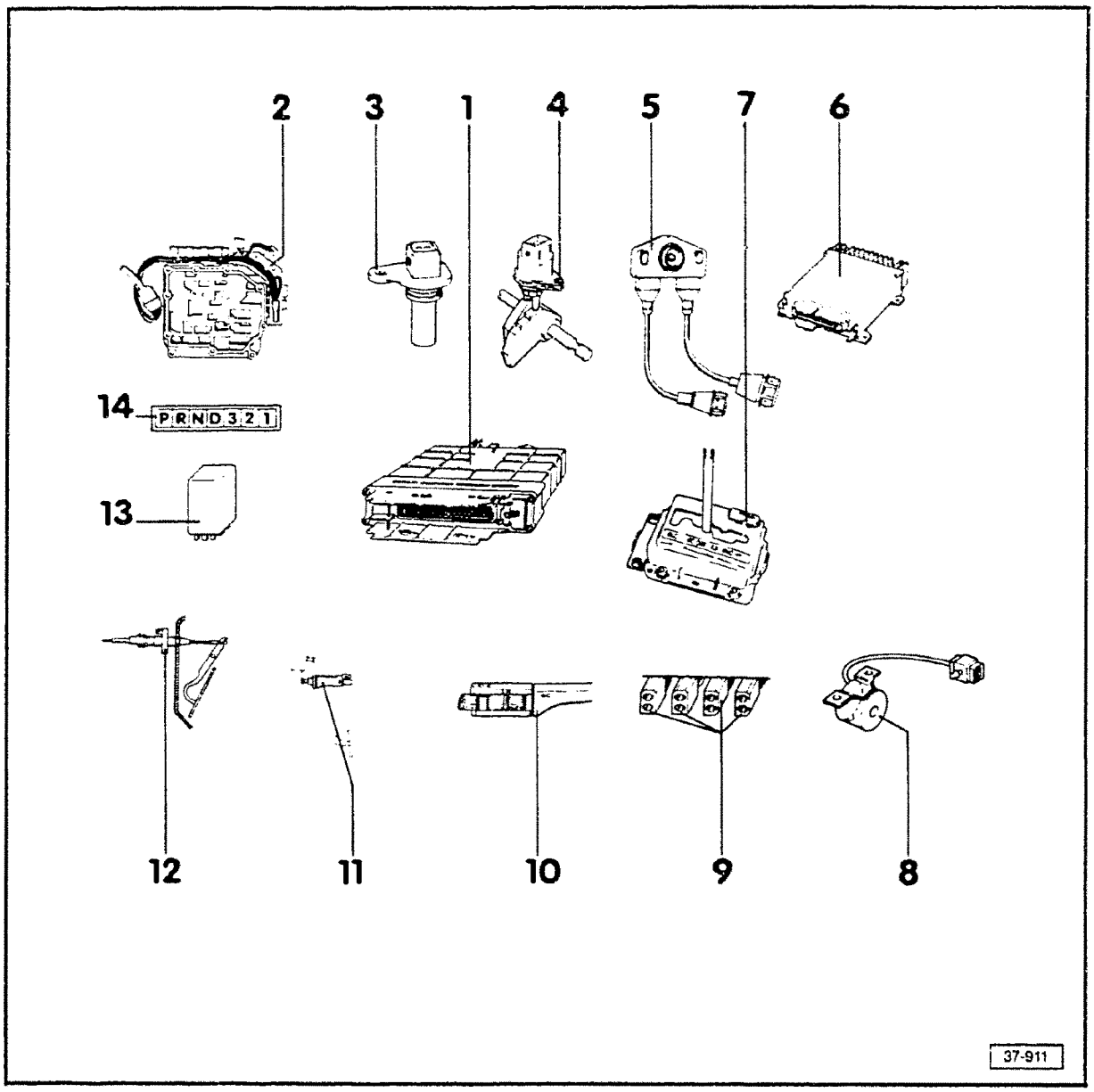

CAUTION

If the Engine or Transmission Control Modules (**ECM or TCM**) are replaced, or if repairs are made to the Throttle Position (**TP**) sensor, the system must be returned to its basic setting — see section D3-80.

1 — Transmission Control Module (TCM) (J 217)
- location: left front floor above pedal bracket
- check using On-Board Diagnostic (**OBD**)

2 — Valve body
- location: under oil pan
- removing/installing, see Repair Group 38
- solenoids **N 88, N 89, N 90, N 91, N 92, N 93, N 94** and ATF temperature sender (**G 93**) are mounted on valve body
- solenoids are checked using On-Board Diagnostic (**OBD**)

cardiagn.com

3 — **Vehicle Speed Sensor (VSS) (G 68)**
- location: on transmission housing
- check using On-Board Diagnostic (OBD)

4 — **Multi-function switch (F 125)**
- location: at rear of transmission case
- check using On-Board Diagnostic (OBD)

5 — **Throttle Position (TP) sensor (G 69)**
- location: on engine fuel distributor
- removing/installing, see Repair Group 24
- check using On-Board Diagnostic (OBD)

6 — **Engine Control Module (ECM)**
location: see engine repair group

7 — **Transmission Range (TR) program switch (E 122)**
- location: on center console
- check using On-Board Diagnostic (OBD)

8 — **Shiftlock solenoid (N 110)**
- location: on selector lever mount
- check using On-Board Diagnostic (OBD)

9 — **Data Link Connectors (DLC)**
location: front floor on driver's side

10 — **Cruise control switch (E 45)**
location: steering column

11 — **Brake light switch (F)**
- location: on pedal cluster
- check using On-Board Diagnostic (OBD)

12 — **Kickdown switch (F 8)**
- location: integrated with accelerator cable in engine compartment
- check using On-Board Diagnostic (OBD)

13 — **Relay for starter interlock and back-up light (J 226)**
location: relay panel (see wiring diagram)

14 — **Indicator for selector lever position (Y 5)**
location: in instrument cluster

cardiagn.com

VAG 1551 Scan Tool (ST), connecting

Requirements

- battery voltage **OK**
- fuses **4, 12** and **21 OK**
- Ground **(GND)** connections **OK**
- selector lever in "P" position
- parking brake on

■ switch **OFF** ignition

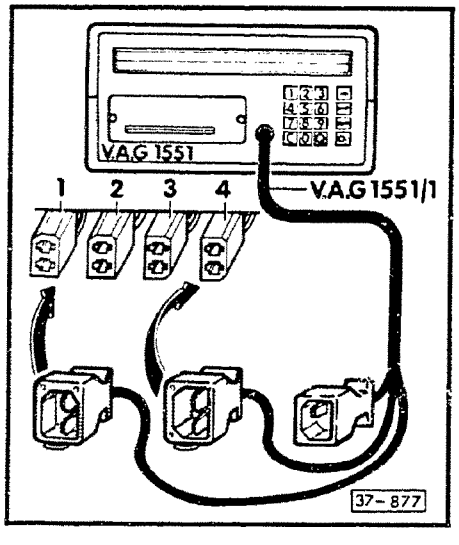

■ connect diagnostic cable **VAG 1551/1** for Scan Tool **VAG 1551**:

- black plug (voltage supply) on black Data Link Connector **(DLC) 1** in vehicle
- white plug on yellow **DLC 4**
- blue plug not used
- plug **3** is not available in some vehicles

VAG Self Diagnosis	**HELP**
1 Rapid data transfer	

- **VAG 1551** displays will alternate as shown

VAG Self Diagnosis	**HELP**
Blink code output	

and

Note

For additional operating instructions push the **HELP** key.

If no display appears, check the voltage supply to the Scan Tool.

The ➡ key advances the program to the next display.

cardiagn.com

Reading Diagnostic Trouble Code (DTC) Memory using VAG 1551

After connecting the Scan Tool **(ST)**, the following operating modes appear alternately:

1 Rapid data transfer

and

2 Blink code output

Note
Press the **PRINT** button for a complete printout of available diagnostic functions. See chart at end of this section.

- select operating mode **1**, "Rapid data transfer"
- switch ignition **ON**

```
Rapid data transfer          HELP
Insert address word XX
```

- read display:
- press keys **0** and **2** (this selects program **02** for "transmission electronics")

```
Rapid data transfer          Q
02 transmission electronics
```

- read display:
- press **Q** key to enter input

```
095927731 R Digimat          0249
Code 127                 WSC131071
```

- read display showing Transmission Control Module **(TCM)** identification:

```
Control unit does not respond!  HELP
```

- if display appears as shown:
- press **HELP** key to print out a list of possible malfunction causes (after eliminating cause, input **02** address word again)

Note
If **"Control unit does not respond!"** appears again:

- check for open circuits on Data Link Connectors **(DLC)** – see wiring diagram
- see **DTC** table under 5-digit code **65535** – control module malfunctioning
- press ➡ key

cardiagn.com

Rapid data transfer	HELP
Select function XX	

- read display:
- press **0** and **2** keys (to select program **02** for checking **DTC** Memory)

Rapid data transfer	Q
02 Check fault memory	

- read display
- press **Q** key to enter input
- read display showing number of malfunctions:

2 faults recognized!
(Example)

or

No fault recognized
(Example)

The stored malfunctions are displayed and printed out one after another.

- after last malfunction has been displayed, press ➡ key
- eliminate malfunctions per **DTC** tables, section D3-60

List of possible diagnostic functions	Section
01 – Call up control module version	D3-50
02 – Read Diagnostic Trouble Code **(DTC)** Memory	D3-50
03 – Diagnose control module (currently unavailable)	–
04 – Initiate basic setting	D3-80
05 – Erase Diagnostic Trouble Code **(DTC)** Memory	D3-70
06 – End output	–
07 – Code control module (currently unavailable)	–
08 – Read measured value block	D3-90, D3-100
09 – Read individual measured values (not necessary if function **08** was previously selected)	D3-110

cardiagn.com

Diagnostic Trouble Code (DTC) charts

Listed below are all the possible transmission malfunctions that can be recognized by the Transmission Control Module **(TCM) (J 217)** and displayed by the Scan Tool **VAG 1551**.

If malfunctions occur only occasionally or if the **DTC** Memory was not canceled after elimination of the malfunction, those malfunctions will be displayed as sporadically occurring. Sporadic malfunctions are shown with an "SP/" at the right side of the display.

If malfunctioning components are found, also check the wiring to the components for short or open circuits using the wiring diagram.

cardiagn.com

VAG 1551 display	Possible causes	Repair
00000 4444 No fault recognized	If after a repair "no fault" appears, **OBD** has ended. If after repair transmission does not function properly, conduct repairs per repair manual.	
00258 1113 Solenoid valve **1 (N 88)** open circuit short to ground	Open circuit or short circuit in wiring Solenoid valve **1** malfunctioning	Check wiring, connections and solenoid test step no. **6*** Replace valve body
00260 1121 Solenoid valve **2 (N 89)** open circuit short to ground	Open circuit or short circuit in wiring Solenoid valve **2** malfunctioning	Check wiring, connections and solenoid test step no. **7*** Replace valve body
00262 1123 Solenoid valve **3 (N90)** open circuit short to ground	Open circuit or short circuit in wiring Solenoid valve **3** malfunctioning	Check wiring, connections and solenoid test step no. **8*** Replace valve body
00263 1124 Transmission	Mechanical/hydraulic malfunction Clutch or valve body malfunctioning	Read measured value block in whichever gear malfunction occurs Replace valve body or clutch
00264 1131 Solenoid valve **4 (N91)** open circuit short to ground	Open circuit or short circuit in wiring Solenoid valve **4** malfunctioning	Check wiring, connections and solenoid test step no. **9*** Replace valve body
00266 1133 Solenoid valve **5 (N 92)** open circuit short to ground	Open circuit or short circuit in wiring Solenoid valve **5** malfunctioning	Check wiring, connections and solenoid test step no. **10*** Replace valve body
00268 1141 Solenoid valve **6 (N 93)** open circuit short to ground	Open circuit or short circuit in wiring Solenoid valve **6** malfunctioning	Check wiring, connections and solenoid Read individual measured value test step no. **11*** Replace valve body

*See section D3-120, Electrical testing

cardiagn.com

VAG 1551 display	Possible causes	Repair
00270 1143 Solenoid valve **7 (N 94)** open circuit short to ground	Open circuit or short circuit in wiring Solenoid valve **7** malfunctioning	Check wiring, connections and solenoid test step no. **12*** Replace valve body
00281 1231 Vehicle speed sensor **(G 68)** No signal	Open circuit in wiring Vehicle Speed Sensor **(VSS)** malfunctioning	Check wiring, connections and speed sensor Read individual measured value test step no. **15*** Replace Vehicle Speed Sensor
00293 1314 Multi-function switch **(F 125)**	Open circuit in wiring Multi-function switch malfunctioning	Check wiring and connections Read individual measured value test step no. **5*** Replace multi-function switch
00296 1323 Kickdown switch **(F 8)**	Open circuit in wiring Throttle Position **(TP)** sensor malfunctioning Kickdown switch malfunctioning	Check wiring and connections Read measured value block test step no. **14*** and check **TP** sensor test step no. **2*** Replace accelerator cable
00299 1332 Trans-program switch **(E 122)** short circuit	Short circuit Transmission Range **(TR)** program switch malfunctioning	Check wiring and connections Read measured value block test step no. **16*** Replace **TR** program switch
00300 1333 Trans oil temperature sender **(G 93)** No fault code recognized	Open circuit ATF temperature sender malfunctioning	Check wiring and connections Read individual measured value test step no. **17*** Replace valve body
00518 2212 Throttle valve potentiometer **(G 69)** Signal outside tolerance	Open circuit or short circuit Throttle Position **(TP)** sensor malfunctioning	Check wiring and connections Read measured value block test step no. **2*** Replace **TP** sensor

*See section D3-120, Electrical testing.

cardiagn.com

VAG 1551 display	Possible causes	Repair
00526 2131 Brake light switch (F) No fault identified	Open circuit Brake light switch malfunctioning	Check wiring and connections Read measured value block test step no. **4*** Replace brake light switch
00529 2122 Engine speed signal missing	Open circuit	Check wiring and connections Check Engine Control Module **(ECM)**
00532 2234 Supply voltage	Battery malfunctioning Voltage for valves too low	Check battery voltage, replace if necessary Read individual measured value Check supply voltage to Transmission Control Module **(TCM) (J 217)** test step no. **1***
00545 2314 Engine/transmission electrical connection open circuit short to ground	Open circuit or short circuit in wiring No connection between Engine and Transmission Control Modules	Check wiring and connections Read measured value If necessary, replace Engine Control Module **(ECM)** Return system to basic setting — section D3-80
00596 Short between valve wires	Open circuit or short circuit in wiring	Check wiring and connections test steps no. **6*** to **12*** and test step **17***
01236 4314 Selector lever lock solenoid **(N 110)** open circuit short to ground	Open circuit or short circuit in wiring Interlock solenoid switch malfunctioning	Check wiring, connections and solenoid test steps no. **3*** and **13*** Replace shift interlock solenoid switch

*See section D3-120, Electrical testing.

cardiagn.com

VAG 1551 display	Possible causes	Repair
65535 1111 Control unit **(J 217)**	Electrical interferences from outside sources or poor Ground **(GND)** connection Transmission Control Module **(TCM)** malfunctioning	Check wiring and connections test step no. **1*** Replace **TCM** if necessary Return system to basic setting — section D3-80

*See section D3-120, Electrical testing.

Note

Replace the Transmission Control Module (TCM) and return system to basic setting only after determining and eliminating all possible mechanical, electrical, and hydraulic malfunctions.

cardiagn.com

Erasing Diagnostic Trouble Code (DTC) Memory using VAG 1551

Requirements

- **DTC** Memory is recalled and malfunctions eliminated

Rapid data transfer HELP
Select function xx

- read display:
- press **0** and **5** keys (to select the program **05** for clearing the **DTC** Memory)

Rapid data transfer HELP
05 Erase Fault memory

- read display:
- enter input with **Q** key

Important!
Fault memory was not interrogated

Note
If the following display appears, the ignition was switched **OFF** or the engine allowed to run between **DTC** Memory reading and erasing or the **DTC** Memory was not recalled initially. Follow the work sequence exactly, otherwise no erasure of the memory will take place.

Rapid data transfer ➡
Fault memory is erased

- read display; **DTC** Memory is now erased

Note
Wait approximately one minute before reading the **DTC** Memory again.

After erasing the **DTC** Memory:

- test drive vehicle and read **DTC** Memory again
  - following must be displayed:

No fault recognized

- press ➡ key

cardiagn.com

Returning to basic setting, automatic transmission 097

Return system to basic setting after the following repairs:

- engine replacement
- throttle replacement or cable adjustment
- Throttle Position **(TP)** sensor replacement or adjustment
- Transmission Control Module **(TCM)** replacement

```
Rapid data transfer                HELP
Select function XX
```

- with system in program **02** for transmission electronics, read display:
- press **0** and **4** keys (to select program **04** for "basic setting")
  - Accelerator Pedal **(AP)** must not be depressed at this point

```
Rapid data transfer                Q
04 Start basic setting
```

- read display
- press **Q** key to enter input

```
Start basic setting                HELP
Input display group number XX
```

- read display (appears with program card /2 only)
- press keys **0** and **0**
- press **Q** key to enter input

```
System in basic setting            ➡
```

- read display
  - system is now returned to basic setting
- push Accelerator Pedal to kickdown position and hold for three seconds
- press ➡ key

```
Rapid data transfer                HELP
Select function XX
```

- read display

cardiagn.com

Function 08, measuring value block, reading (early version)

After connecting the Scan Tool **VAG 1551** and selecting the "Transmission electronics" program (see sections D3-40 and D3-50), the measuring value block function can be read as follows:

```
Rapid data transfer                HELP
Select function XX
```

- read display
- press keys **0** and **8** (to select function **08** for reading measuring value block)
- press **Q** key to enter input

```
Rapid data transfer                Q
08 Read measuring value block
```

- read display
- press **Q** key

```
Read measuring value block         HELP
Input display group number XX
```

- read display
- press **0** key two times
- press **Q** key to enter input

```
Read measuring value block
0  1  0  0  17  0  242  250  19  3
```

- read display (EXAMPLE)

Note
The ten value readouts shown correspond, in order, to the ten **channel** numbers in the chart that follows this page.

If the display shows only **four** channel readouts see section D3-100.

When printer is switched **ON**, current display can be printed out.

Only the measuring value block shown in this section or the one in section D3-100 will be displayed, depending on the Transmission Control Module **(TCM)** version.

- observe values shown on tester and compare with values in chart
- if specified values for **TP** sensor (display segment 2) are not attained, first return system to basic setting, see section D3-80
- if specified values appear in all channels press ➡ key
  - problem has not been found using this test sequence

cardiagn.com

- if specified values are not observed, return system to basic setting (see section D3-80) and follow instructions in chart for further testing to locate source of problem

Channel number	Designation	Conditions		Indicated on VAG 1551 (specified value)	If specified value NOT obtained
1	Road speed	transmission in **D**		driven speed in km/h	Speedometer and **VAG 1551** readings may deviate slightly
2	Accelerator Pedal **(AP)**	Closed Throttle Position **(CTP)**		0 to 2	Check position of throttle
		Wide Open Throttle **(WOT)**		253 to 255	Return system to basic setting Adjust Throttle Position **(TP)** sensor or accelerator cable — replace if necessary
3	Transmission Range **(TR)**	vehicle stationary, selector in position:	N, P	0	Check multi-function switch **(F 125)** Note test step **5***
			D, 3, 2, 1	1	
			R	255	
		in driving mode, selector in position:	1	1	
			2	1 and 2	
			3	1, 2, 3, and 4**	
			D	1, 2, 3, 4** and 5**	
4	Selector lever	selector in position:	1	1	Check multi-function switch **(F 125)** Note test step **5***
			2	2	
			3	3	
			D	5	
			R	255	
			N, P	0	
5	Coding of solenoid valves	not used			
6	Shift mode	not used			

*See section D3-120, electrical test steps.

The readout "4" indicates Transmission Range **(TR) 3 mechanical, readout "5" indicates Transmission Range **(TR)** 4 mechanical

CAUTION

A second person is needed to read specified values when in driving mode.

cardiagn.com

Channel number	Designation	Conditions		Indicated on VAG 1551 (specified value)	If specified value NOT obtained
7	Digital inputs	vehicle stationary	selector lever in D	original value: min. 240 max. 254	
			brake pedal actuated	+ 1 from original value	Note test step **4***
			kickdown	–32 from original value	Note test step **14***
			push "S" switch	–16 from original value	Note test step **16***
8	Solenoid valve **6 (N 93)**	not used		—	—
9	Throttle Position **(TP)** sensor **(G 69)**	vehicle stationary	Closed Throttle Position **(CTP)**	min. 8	when accelerating, numerical value increases consistently.
			Wide Open Throttle **(WOT)**	max. 240 Note 0 to 255 corresponds to a range of 0 to 5 volts.	If numerical value decreases replace **TP** sensor Note test step **2***
10	Engine Speed **(RPM)**	vehicle stationary with engine running		28 (at idle) Note 28 corresponds to 840 rpm (where 1 = 30 rpm)	If necessary, adjust per Repair Manual

*See section D3-120, electrical test steps.

cardiagn.com

Function 08, measuring value block, reading (late version)

```
Rapid data transfer                HELP
Select function XX
```

- after selecting program **02** for transmission electronics, read display
- press keys **0** and **8** (to select program **08** for reading measuring value block)

```
Rapid data transfer                Q
08 Read measuring value block
```

- read display
- press **Q** key to enter input

```
Read measuring value block         HELP
Input display group number XX
```

- read display

Note
The measuring value block can only be read with the tester program card /2 installed.

- press keys **0** and **1** (to select group number **01** and display values corresponding to group **01** in following chart)
- press **Q** key to enter input

```
Read measuring value block         1
P    0.37V    0%    00000111
```

- read display (EXAMPLE)
- repeat group number entry for remaining groups (**02** through **05**)
  - when printer is switched **ON**, current display can be printed out

- see specified values on following pages
- if specified values for **TP** sensor (display segment 2) are not attained, first return system to basic setting, see section D3-80.
- if specified values appear on all channels press ➡ key
  - problem has not been found using this test sequence

- if specified values are not observed, return system to basic setting (see section D3-80) and follow instructions in chart for further testing

cardiagn.com

Measuring value block, overview

Group number	Channel number	Designation
01	1	Selector lever position
	2	Throttle Position (TP) sensor voltage
	3	Accelerator Pedal (AP)
	4	Switch positions
02	1	Actual current of solenoid valve 6, (N 93)
	2	Specified current of solenoid valve 6, (N 93)
	3	Battery voltage
	4	Voltage at Vehicle Speed Sensor (VSS) (G 68)
03	1	Vehicle speed
	2	Engine RPM
	3	Drive range
	4	Accelerator Pedal (AP) value
04	1	Shift valves
	2	Drive range
	3	Selector lever position
	4	Vehicle speed
05	1	ATF temperature
	2	Switch openings
	3	Drive range
	4	Engine Speed (RPM)

cardiagn.com

Group number	Channel number	Test requirements		VAG 1551 display (specified value)	If test results NOT within specifications
01	1 Selector lever position	vehicle stationary, selector lever in:	P	P	Check multi-function switch **(F 125)** Note test step **5***
			R	R	
			N	N	
			D	D	
			3	3	
			2	2	
			1	1	
	2 Throttle Position **(TP)** sensor **(G 69)** voltage	vehicle stationary	Closed Throttle Position **(CTP)**	min. 0.156 Volts max. 0.8 Volt	When accelerating from **CTP** to **WOT**, the voltage value must increase Note test step **2*** Return system to basic setting, see section D3-80
			Wide Open Throttle **(WOT)**	min. 3.5 Volts max. 4.680 Volts	
	3 Accelerator Pedal **(AP)** value	vehicle stationary	Closed Throttle Position **(CTP)**	0 to 1%	Check Throttle Position **(TP)** sensor **(G 69)** see Repair Group 24
			Wide Open Throttle **(WOT)**	99 to 100%	
	4 Switch position	1 Brake	activated	1	Note test step **4***
			not activated	0	
		2 Limited-slip control	activated	1	
			not activated	0	
		3 Program switch	activated	1	Note test step **16***
			not activated	0	
		4 Kickdown switch	activated	1	Note test step **14***
			not activated	0	
		5 Selector lever	R, N, D, 3, 2	1	Check multi-function switch **(F 125)** Note test step **5***
			P, 1	0	
		6 Selector lever	P, R, 2, 1	1	
			N, D, 3	0	
		7 Selector lever	P, R, N, D	1	
			3, 2, 1	0	
		8 Selector lever	P, R, N	1	
			D, 3, 2, 1	0	

* See section D3-120, Electrical test steps.

cardiagn.com

Group number	Channel number	Test requirements		VAG 1551 display (specified value)	If test results NOT within specifications
02	1 Solenoid valve 6 **(N 93)**, actual current	vehicle stationary	Wide Open Throttle **(WOT)**	min. 0.0 Amps	Note test step **11***
			Closed Throttle Position **(CTP)**	max. 1.1 Amps	
	2 Solenoid valve 6 **(N 93)**, specified current	vehicle stationary	Wide Open Throttle **(WOT)**	min. 0.0 Amps	
			Closed Throttle Position **(CTP)**	max. 1.1 Amps	
	3 Battery voltage	vehicle stationary		min. 10.8 Volts max. 16.0 Volts	Check battery, replace if necessary
	4 Vehicle Speed Sensor **(VSS)** **(G 68)**	vehicle stationary		min. 2.20 Volts max. 2.52 Volts	Note test step **15***
03	1 Speed	in driving mode**		driven speed in km/h	Speedometer and **VAG 1551** readings may deviate slightly
	2 Engine Speed **(RPM)**	engine running		engine rpm	Adjust engine, see Repair Groups 24 or 25
	3 Gear engaged	in driving mode**	neutral	O	Check solenoid valves
			reverse	R	Note test steps 6 to **12***
			1 (hydraulic)	1	
			2 (hydraulic)	2	
			3 (hydraulic)	3H	
			3 (mechanical)	3M	
			4 (mechanical)	4	

*See section D3-120, Electrical test steps.

**CAUTION

In driving mode a second person is required to read displayed values.

cardiagn.com

CONTINUED IN THE

BEGINNING OF NEXT ROW

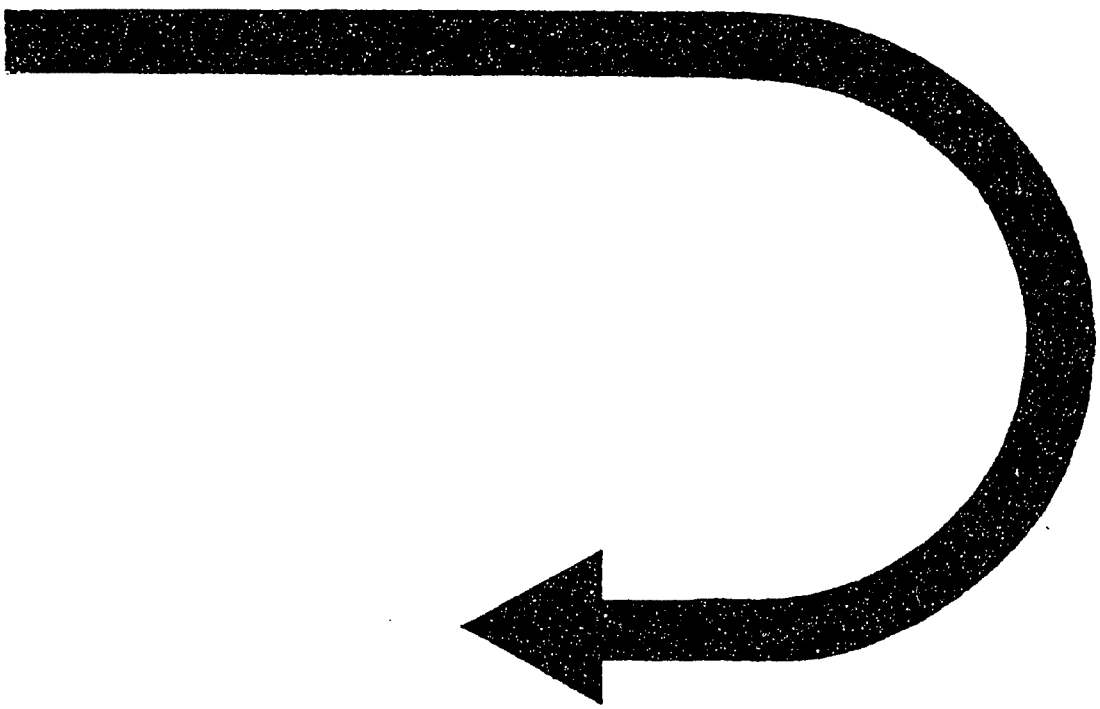

cardiagn.com

Group number	Channel number	Test requirements		VAG 1551 display (specified value)	If test results NOT within specifications
03 (Cont'd)	4 Accelerator Pedal (AP) value	in driving mode**	Closed Throttle Position (CTP)	0 to 1	Check Throttle Position (TP) sensor (G 69), see Repair Group 24 Check kickdown switch, see Repair Group 20 Return system to basic setting, see section D3-80
			Wide Open Throttle (WOT)	99 to 100	
04	1 Solenoid valves	in driving mode**			Individual solenoid valves will be switched depending on driving conditions Note test steps 6* to 10*, and 12*
		(N 88)	switched	1	
			not switched	0	
		(N 89)	switched	1	
			not switched	0	
		(N 90)	switched	1	
			not switched	0	
		(N 91)	switched	1	
			not switched	0	
		(N 92)	switched	1	
			not switched	0	
		(N 94)	switched	1	
			not switched	0	
	2 Gear engaged	in driving mode**	neutral	O	Check solenoid valves Note test steps 6* to 12*
			reverse	R	
			1 (hydraulic)	1	
			2 (hydraulic)	2	
			3 (hydraulic)	3H	
			3 (mechanical)	3M	
			4 (mechanical)	4	

*See section D3-120, Electrical test steps.

**CAUTION

In driving mode a second person is required to read displayed values.

cardiagn.com

Group number	Channel number	Test requirements		VAG 1551 display (specified value)	If test results NOT within specifications
04 (Cont'd)	3 Selector lever position	in driving mode**	P	P	Check multi-function switch **(F 125)** Note test step **5***
			R	R	
			N	N	
			3	3	
			2	2	
			1	1	
	4 Speed	in driving mode**		driven speed in km/h	Speedometer and **VAG 1551** readings may deviate slightly
05	1 ATF temperature	vehicle stationary with engine running		°C (display becomes accurate at approximately 50°C)	Check ATF level at a temperature of 50° to 70°C Note test step **17***
	2 Shifting exits	in driving mode** Engine management			Check harness routing per wiring diagram Replace engine or transmission control modules **(J 217)**
		1	switched **ON**	1	
			switched **OFF**	0	
		2	switched **ON**	1	
			switched **OFF**	0	
	Shifting outlets	Solenoid for shiftlock **(N 110)**			Check harness routing per wiring diagram Replace solenoid for shiftlock Note test step **3***
		3	switched **ON**	1	
			switched **OFF**	0	
		4	switched **ON**	1	
			switched **OFF**	0	
		Cruise control			Check cruise control wiring
		5	**ON**	1	
			OFF	0	
		Air conditioning			Check harness routing per wiring diagram Check air conditioning per repair manual
		6	switched **OFF**	1	
			NOT switched **OFF**	0	
		Light in program switch			Check harness routing per wiring diagram
		7	switched **ON**	1	
			switched **OFF**	0	

*See section D3-120, Electrical test steps.

**CAUTION

In driving mode a second person is required to read displayed values.

cardiagn.com

Group number	Channel number	Test requirements		VAG 1551 display (specified value)	If test results NOT within specifications
05 (Cont'd)	3 Gear engaged	in driving mode**	neutral	O	Check solenoid valves.
			reverse	R	Note test steps 6 to 12*
			1 (hydraulic)	1	
			2 (hydraulic)	2	If shifting does not occur, clutch or brake may be malfunctioning
			3 (hydraulic)	3H	
			3 (mechanical)	3M	
			4 (mechanical)	4	Replace Transmission Control Module **(TCM) (J 217)**
	4 Engine Speed **(RPM)**	in driving mode**		Engine rpm	Adjust per engine repair group

*See section D3-120, Electrical test steps.

**CAUTION

In driving mode a second person is required to read displayed values.

cardiagn.com

Function 09, individual measuring values, reading

After connecting the tester **VAG 1551** and selecting the "Transmission electronics" program (see sections D3-40 and D3-50) the individual measuring values can be read as follows:

```
Rapid data transfer                HELP
Select function XX
```

- read display
- press keys **0** and **9** (to select function **09** for reading individual measuring values)

```
Rapid data transfer                Q
09 Read individual measuring value
```

- read display
- press **Q** key to enter input

```
Read individual measuring value
Enter channel number XX
```

- read display
- press keys to input channel number of desired readout:

  00 Test opening for solenoid valves **(N 88), (N 89), (N 90)**

  01 Test opening for solenoid valves **(N 91), (N 92), (N 93)**

  02 Voltage for Vehicle Speed Sensor **(VSS) (G 68)**

  03 ATF temperature

  04 Test opening for solenoid valve **(N 93)**

  05 Battery voltage

  06 (not used)

  07 Voltage of Throttle Position **(TP)** sensor

```
Read individual measuring value
Channel 03          Measuring value 2
```

- read display
- when printer is switched **ON**, current display can be printed out
- observe values shown on tester and compare with values in charts which follow, for each corresponding channel
- if specified values appear in all channels, press ➡ key
- if specified values are not observed, follow instructions in chart for further testing (see section D3-120 for electrical test steps)

cardiagn.com

Note
When proceeding to the next channel during this check, it is necessary to select the **09** function again before selecting the channel number.

Channel number	Designation	Conditions		Indicated on VAG 1551 (specified value)	If specified value not obtained
00	Test opening for solenoid valves **(N 88), (N 89), (N 90)**	not used		—	—
01	Test opening for solenoid valves **(N 91), (N 92), (N 94)**	not used		—	—
02	Vehicle Speed Sensor **(VSS) (G 68)**	vehicle stationary		minimum 112 maximum 133	Note test step **15***
03	ATF temperature	vehicle stationary with engine running			The ATF temperature must be 50-70°C when checking the ATF level
			approximately 20°C	2	
			approximately 60°C	12	Note test step **17***
			approximately 80°C	24	
04	Solenoid valve **6 (N 93)**	vehicle stationary	Wide Open Throttle **(WOT)**	minimum 0 maximum 10	Note test step **11***
			Closed Throttle Position **(CTP)**	minimum 220 maximum 240	
05	Battery voltage	vehicle stationary	maximum 16V	255	Check battery and replace if necessary
			minimum 10.8V	172	
06	Not used	—		—	—
07	Voltage of Throttle Position **(TP)** sensor **(G 69)**	vehicle stationary	Wide Open Throttle **(WOT)**	maximum 240	Note test step **2***
			Closed Throttle Position **(CTP)**	minimum 8	

*See section D3-120, Electrical test steps.

cardiagn.com

Electrical test steps for troubleshooting automatic transmission 097

Testing equipment

- **VAG 1598**, Test box
- **VAG 1598/9**, adaptor
- **VW 1594** adaptor wires
- **US 1119**, multi-meter

Testing

Perform only those recommended test steps from the Diagnostic Trouble Code **(DTC)** charts, section D3-60 (indicated *)

Requirements

- battery voltage **OK**
- fuses **4**, **12**, and **21 OK**
- Ground **(GND)** connection at left of relay plate **OK**
- **GND** cable connections at battery and transmission **OK**
- switch **OFF** ignition for all test steps
- disconnect multi-point connections from Transmission Control Module **(TCM)**
- connect test box **VAG 1598** and adaptor **VAG 1598/9** to the harness connector and **TCM (J 217)**:

  voltage test – connect adaptor **VAG 1598/9** to **TCM**

  resistance test – disconnect adaptor **VAG 1598/9** from **TCM**

- **TCM GND** connections **OK**

> **CAUTION**
> Switch to appropriate test area on multi-meter **before** connecting. When checking for infinity (∞) Ohms (Ω), switch multi-meter to highest measuring range.

Note

The sockets on the test box **VAG 1598** are identical with the pin designations on the **TCM (J 217)**.

If the test readings vary from the specifications shown, perform the malfunction elimination procedures on the right side of the chart. However, if the readings obtained differ only slightly from the specified values, first clean sockets and connectors of the testers and test leads and repeat test. Before

cardiagn.com

replacing the particular components, test wiring and connections and, particularly if specified values are below 10 Ohms, repeat the resistance measurement on the component.

Specified test values are verified for **US 1119** only and are not necessarily applicable to other testing equipment.

Specified test values are valid for ambient temperatures of 0° to 40°C (32° to 104°F).

38-point connector on Transmission Control Module (TCM), terminal identification

1 - Ground **(GND)** (terminal 31)

2 - Solenoid valve **4, (N 91)**

3 - Solenoid valve **3, (N 90)**

4 - not used

5 - Bulb for Transmission Range **(TR)** program switch, **(E 122)**

6 - K-wire of diagnosis

7 - limited slip control

8 - Kickdown for A/C

9 - Throttle Position **(TP)** sensor, **(G 69)** signal voltage

10 - Throttle Position **(TP)** sensor, **(G 69)** voltage supply, 5 volt

11 - not used

12 - Selector lever display **(Y 5)**

13 - Vehicle Speed Sensor **(VSS)**, **(G 68)**, shielding

14 - L-wire of diagnosis

15 - Multi-function switch, **(F 125)**

16 - Multi-function switch, **(F 125)**

17 - Kickdown switch, **(F 8)**

18 - Supply voltage for solenoid valve

19 - Supply voltage (terminal 15)

20 - Shift lock solenoid, **(N 110)**

21 - Solenoid valve **7, (N 94)**

22 - Solenoid valve **1, (N 88)**

23 - Solenoid valve **2, (N 89)**

24 - Solenoid valve **5, (N 92)**

cardiagn.com

25 - Solenoid valve 6, (N 93)

26 - Brake light switch, (F)

27 - Diesel engine - Engine Speed (RPM) sensor
Gas engine - TDC signal

28 - Diesel engine - Engine Speed (RPM)
Gas engine - ignition timing adjustment

29 - Throttle Position (TP) sensor, (G 69), Ground (GND)

30 - ATF temperature

31 - not used

32 - Vehicle Speed Sensor (VSS), (G 68)

33 - Vehicle Speed Sensor (VSS), (G 68)

34 - Multi-function switch, (F 125)

35 - Multi-function switch, (F 125)

36 - Program switch, (E 122)

37 - Idle switch

38 - Cruise control

cardiagn.com

Voltage tests

Test step	VAG 1598 terminals	Component to be tested	•Test conditions and additional steps	Specified value or results	If test results NOT within specs
1	19 + 1	Transmission Control Module **(TCM) (J 217)** voltage supply	• switch ignition **ON**	Battery voltage (approx.)	Check wire from terminal 1 to Ground **(GND)** Check wire for continuity from terminal **19**, to terminal **15** in relay panel
2	10 + 29	Throttle Position **(TP)** sensor **(G 69)**	• switch ignition **ON** • disconnect Throttle Position **(TP)** sensor	4.6 to 5 Volts	Replace **TCM** Return system to basic setting
	9 + 29		Closed Throttle Position **(CTP)** min. max.	0.156 Volts 0.8 Volts	When accelerating from **CTP** to **WOT**, voltage value increases consistently Calibrate **TP** sensor; replace if necessary (see engine section) Return system to basic setting
			Wide Open Throttle **(WOT)** min. max.	3.5 Volts 4.68 Volts	
3	19 + 20	Solenoid switch **(N 110)** for shift interlock*	• switch ignition **ON** • selector lever in P or N	Battery voltage (approx.)	Replace **TCM** Return system to basic setting
			brakes applied	0 Volts	Check signal from brake light switch **(F)** — see test step no. **4**. Replace **TCM** if necessary Return system to basic setting
4	26 + 1	Signal from brake light switch **(F)**	• switch ignition **ON** do **NOT** apply brakes	0 Volts	Check brake light switch and wiring per wiring diagram
			brakes applied	Battery voltage (approx.)	

*Only for VW vehicles.

cardiagn.com

Voltage tests/Resistance Tests

Test step	VAG 1598 terminals	Component to be tested	•Test conditions and additional steps	Specified value or results	If test results NOT within specs
5	34 + 1	Multi-function switch (F 125)	• switch ignition **ON**		Check wire routing per wiring diagram
			move selector lever to positions N, D, 2 and 3	4.5 to 5 Volts	Replace multi-function switch
			move selector lever to position P and 1	0 to 0.8 Volts	
			move selector lever to position R	approx. battery voltage	
	15 + 1		move selector lever to position P, R, 2 and 1	4.5 to 5 Volts	
			move selector lever to position N, D and 3	0 to 0.8 Volts	
	35 + 1		move selector lever to position P, R, N and D	4.5 to 5 Volts	
			move selector lever to position 3, 2, and 1	0 to 0.8 Volts	
	16 + 1		move selector lever to position P, R, and N	approx. battery voltage	
			move selector lever to position D, 3, 2, and 1	0 to 0.8 Volts	
6	22 + 18	Solenoid valve 1 (N 88)	• switch ignition **OFF**	55-65 Ohms	Check harness per wiring diagram
	22 + 1		Transmission Control Module (TCM) (J 217) disconnected	∞ Ohms	Replace valve body
7	23 + 18	Solenoid valve 2 (N 89)	• switch ignition **OFF**	55-65 Ohms	Check harness per wiring diagram
	23 + 1		Transmission Control Module (TCM) (J 217) disconnected	∞ Ohms	Replace valve body

cardiagn.com

Resistance test

Test step	VAG 1598 terminals	Component to be tested	•Test conditions and additional steps	Specified value or results	If test results NOT within specs
8	3 + 18	Solenoid valve 3 (N 90)	• switch ignition OFF	55-65 Ohms	Check harness routing per wiring diagram
	3 + 1		TCM (J 217) disconnected*	∞ Ohms	Replace valve body
9	2 + 18	Solenoid valve 4 (N 91)	• switch ignition OFF	55-65 Ohms	Check harness routing per wiring diagram
	2 + 1		TCM (J 217) disconnected*	∞ Ohms	Replace valve body
10	24 + 18	Solenoid valve 5 (N 92)	• switch ignition OFF	55-65 Ohms	Check harness routing per wiring diagram
	24 + 1		TCM (J 217) disconnected*	∞ Ohms	Replace valve body
11	25 + 18	Solenoid valve 6 (N 93)	• switch ignition OFF	4.5-6.5 Ohms	Check harness routing per wiring diagram
	25 + 1		TCM (J 217) disconnected*	∞ Ohms	Replace valve body
12	21 + 18	Solenoid valve 7 (N 94)	• switch ignition OFF	55-65 Ohms	Check harness routing per wiring diagram
	21 + 1		TCM (J 217) disconnected	∞ Ohms	Replace valve body
13	19 + 20	Solenoid switch (N 110) for shift interlock*	• switch ignition OFF TCM (J 217) disconnected	14-25 Ohms	Check harness routing per wiring diagram Replace magnet for shift interlock
14	1 + 17	Kickdown switch (F 8)	• switch ignition OFF • TCM (J 217) disconnected do NOT press Accelerator Pedal (AP)	∞ Ohms	Check harness routing per wiring diagram Adjust or replace accelerator cable
			depress AP fully	less than 1.5 Ohms	

*Only for VW vehicles.

cardiagn.com

Resistance test

Test step	VAG 1598 terminals	Component to be tested	•Test conditions and additional steps	Specified value or results	If test results NOT within specs
15	32 + 33	Vehicle Speed Sensor (VSS) (G 68)	• switch ignition **OFF** • **TCM (J 217)** disconnected	800 to 830 Ohms	Check harness routing per wiring diagram Replace **VSS**
16	36 + 1	Transmission Range (TR) program switch (E 122)	• switch ignition **OFF** • **TCM (J 217)** disconnected **TR** program switch not activated	∞ Ohms	Check harness routing per wiring diagram Replace **TR** program switch
			TR program switch activated	less than 1.5 Ohms	
17	30 + 18	ATF temperature sensor (G 93)	• switch ignition **OFF** • **TCM (J 217)** disconnected ATF temperature (approx.) 20°C (68°F)	0.247 Meg Ohm	Check harness routing per wiring diagam Replace ATF temperature sensor
			ATF temperature °60C (140°F)	approx. 48.8 kOhm	
			ATF temperature 120°C (216°F)	approx. 7.4 kOhm	

cardiagn.com